DETAILED DRAWINGS

SUPPLEMENTAL TO
THE STANDARD
SPECIFICATIONS FOR
ROAD AND BRIDGE
CONSTRUCTION

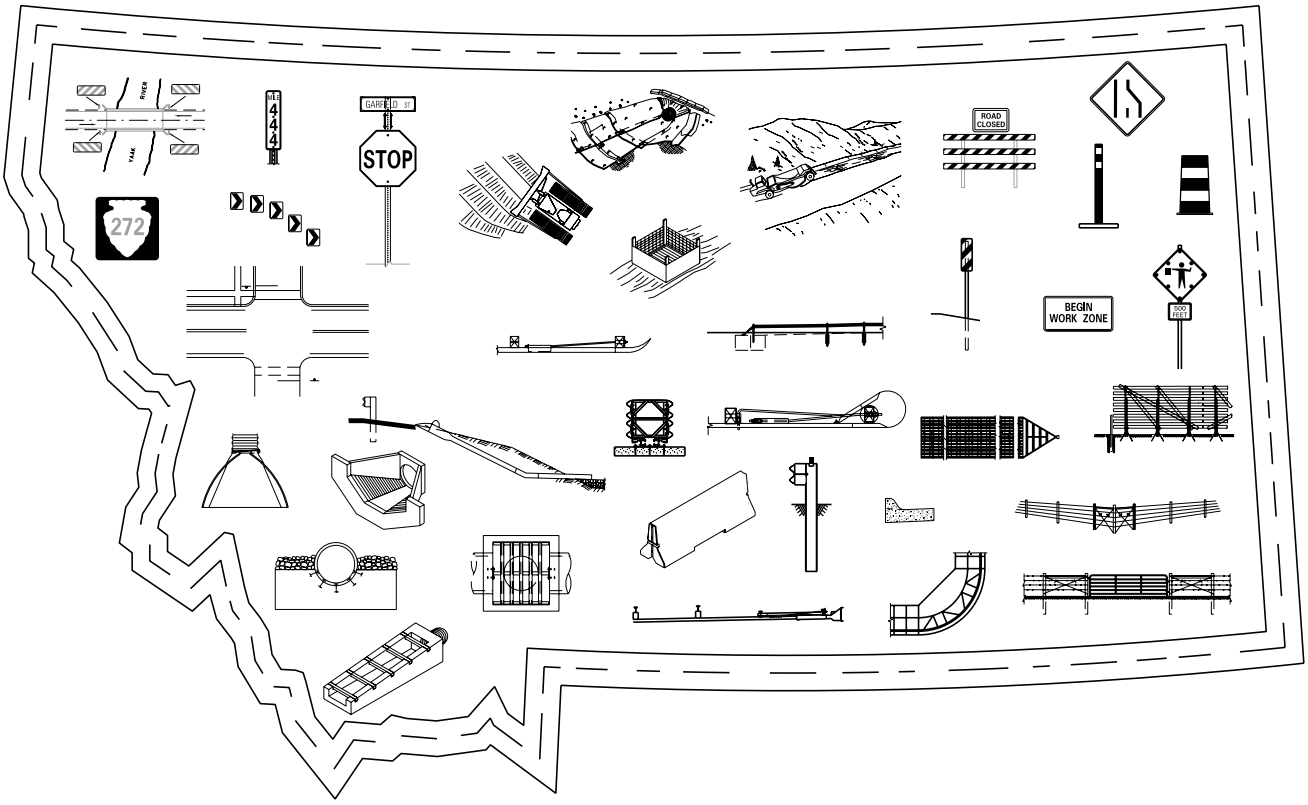

MONTANA DEPARTMENT
OF TRANSPORTATION

EFFECTIVE:
SEPTEMBER 2014

DETAILED DRAWINGS

TABLE OF CONTENTS

EFFECTIVE: SEPTEMBER 2014

STANDARD SPECIFICATION SECTION AND DRAWING TITLE	DRAWING NUMBER
SECTION 101: DEFINITIONS AND TERMS	
ABBREVIATIONS	101–05
ABBREVIATIONS	101–06
ABBREVIATIONS	101–07
ABBREVIATIONS	101–08
SYMBOLS	101–10
SECTION 203: EXCAVATION AND EMBANKMENT	
APPROACHES	203–05
DITCH BLOCKS	203–20
SECTION 208: WATER POLLUTION CONTROL AND STREAM PRESERVATION	
SCHEDULE OF BEST MANAGEMENT PRACTICES	208–00
HYDRAULIC MULCH (SS–3)	208–04
SOIL BINDERS (EC–5)	208–08
STRAW MULCH (EC–6)	208–10
ROLLED EROSION CONTROL PRODUCTS (EC–7)	208–12
EARTH DIKES / DRAINAGE SWALES & LINED DITCHES (EC–9)	208–16
TEMPORARY OUTLET AND VELOCITY DISSIPATION DEVICES (EC–10)	208–18
TEMPORARY SLOPE DRAINS (EC–11)	208–20
SLOPE ROUGHENING (EC–12)	208–22
VEGETATED BUFFER (EC–14)	208–26
SILT FENCE (SC–1)	208–30
DESIGN BASIN (SC–2)	208–32
SEDIMENT TRAP (SC–3)	208–34
CHECK DAMS (SC–4)	208–36
FIBER ROLLS (SC–5)	208–38
GRAVEL BAG BERM (SC–6)	208–40
SAND BAG BARRIERS (SC–8)	208–42
STRAW BALE BARRIERS (SC–9)	208–44
STORM DRAIN INLET PROTECTION (SC–10)	208–46
DUGOUT DITCH BASIN (SC–11)	208–48
STABILIZED CONSTRUCTION ENTRANCE / EXIT (TC–1)	208–56
ENTRANCE / EXIT TIRE WASH (TC–3)	208–58
TEMPORARY STREAM CROSSINGS (NS–4)	208–60
SECTION 301: AGGREGATE SURFACING	
ROADWAY EMBANKMENT AT BRIDGE END	301–00

STANDARD SPECIFICATION SECTION AND DRAWING TITLE	DRAWING NUMBER

SECTION 411: COLD MILLING

SHOULDER RUMBLE STRIPS 411–02
CENTERLINE RUMBLE STRIPS 411–05

SECTION 501: PORTLAND CEMENT CONCRETE PAVEMENT

PCCP JOINTS 501–00
PCCP ISOLATION JOINTS 501–05
PCCP ISOLATION JOINTS 501–10
PCCP REPAIR 501–15
DOWEL BAR RETROFIT FOR PCCP 501–20
DOWEL BAR RETROFIT FOR PCCP 501–25

SECTION 552: CONCRETE STRUCTURES

CONCRETE CUTOFF WALLS FOR CULVERTS 552–00
CONCRETE, RIPRAP AND BEDDING MATERIAL QUANTITIES FOR SING.
AND DBL. CULVERT INSTALLATION 552–04
CONCRETE, RIPRAP AND BEDDING MATERIAL QUANTITIES FOR SING.
AND DBL. CULVERT INSTALLATION 552–06
CONCRETE, RIPRAP AND BEDDING MATERIAL QUANTITIES FOR SING.
AND DBL. CULVERT INSTALLATION 552–08

SECTION 603: CULVERTS, STORM DRAINS, SANITARY SEWERS, STOCKPASSES AND UNDERPASSES

CMP FLARED END TERMINAL SECTION (FETS) 603–02
PREFABRICATED RCP FLARED END TERMINAL SECTION (FETS) 603–08
PREFABRICATED RCP FLARED END TERMINAL SECTION (FETS) (METRIC) 603–08
PREFABRICATED RCP ARCH FLARED END TERMINAL SECTION (FETS) 603–10
RCP ROAD APPROACH CULVERT END TREATMENT (RACET) 603–12
CMP ROAD APPROACH CULVERT END TREATMENT (RACET) 603–14
PRECAST MEDIAN U–TURN CROSS DRAIN AND CONC. BEVELED END 603–17
BEDDING FOR MAINLINE & PUBLIC APPROACH CULVERTS
48″ (1200 mm) EQUIVALENT & SMALLER 603–18
BEDDING FOR CULVERTS 54″ (1350 mm) EQUIVALENT & LARGER 603–19
TRENCH BEDDING DETAIL 603–20
WATER TIGHT JOINT FOR REINFORCED CONCRETE PIPE 603–22
REINFORCED CONCRETE PIPE JOINT 603–24
TYPICAL FIELD CAST CONCRETE CONNECTIONS 603–26
CTX ADAPTER 603–27
EMBANKMENT PROTECTOR 603–28
VEHICULAR UNDERPASS AND BACKFILL RETAINER & CUTOFF WALL DETAIL 603–30
VEHICULAR UNDERPASS AND BACKFILL RETAINER & CUTOFF WALL DETAIL (METRIC) 603–30
VEHICULAR UNDERPASS PCCP TRANSVERSE JOINT & BACKFILL RETAINER DETAIL 603–31
STEP BEVEL FOR CIRCULAR METAL CULVERT 603–32
BEVEL ON ARCH METAL CULVERT 603–34
CORRUGATED STEEL PIPE STOCKPASS 603–36

STANDARD SPECIFICATION SECTION AND DRAWING TITLE	DRAWING NUMBER

SECTION 604: MANHOLES, COMBINATION MANHOLES AND INLETS, AND INLETS

MEDIAN INLET 604–00
CONCRETE MANHOLE 604–02
CURB INLET TYPE II 604–03
DROP INLET TYPE IV 604–04
TYPE IV DROP INLET WITH SLOTTED DRAIN 604–06
TYPE II CURB INLET WITH SLOTTED DRAIN 604–08
DROP INLETS TYPE I AND V 604–14
DROP INLETS TYPE III AND VI 604–16
TYPE A AND B CURB INLETS 604–18

SECTION 606: GUARDRAIL AND CONCRETE BARRIER RAIL

METAL GUARDRAIL STANDARD – WOOD POSTS 606–05A
METAL GUARDRAIL STANDARD – STEEL POSTS 606–05B
STIFFENED GUARDRAIL SECTIONS 606–07
NESTED W–BEAM GUARDRAIL 606–09
METAL GUARDRAIL – LONG POSTS (WOOD) 606–11A
METAL GUARDRAIL – LONG POSTS (METAL) 606–11B
OPTIONAL TERMINAL SECTION – ET–PLUS 606–13A
OPTIONAL TERMINAL SECTION – SKT 350 . . . . . 606–13B
ONE–WAY DEPARTURE TERMINAL SECTION 606–18
BRIDGE APPROACH SECTIONS – WOOD POSTS 606–24A
BRIDGE APPROACH SECTIONS – STEEL POSTS 606–24B
SKEWED BRIDGE APPROACH SECTIONS – WOOD POSTS 606–25A
SKEWED BRIDGE APPROACH SECTIONS – STEEL POSTS 606–25B
TAPERED CONCRETE CURB DETAIL 606–26
TAPERED CONCRETE CURB DETAIL 606–27
IMPACT ATTENUATOR – QUADGUARD 606–30A
IMPACT ATTENUATOR – TRACC 606–30B
IMPACT ATTENUATOR – TRACC (METRIC) 606–30B
IMPACT ATTENUATOR – QUEST 606–30C
IMPACT ATTENUATOR – QUEST (METRIC) 606–30C
IMPACT ATTENUATOR – QUADGUARD II 606–30D
IMPACT ATTENUATOR – QUADGUARD ASSEMBLY DETAILS 606–31A
IMPACT ATTENUATOR – TRACC ASSEMBLY DETAILS 606–31B
IMPACT ATTENUATOR – TRACC ASSEMBLY DETAILS (METRIC) 606–31B
IMPACT ATTENUATOR – QUEST ASSEMBLY DETAILS 606–31C
IMPACT ATTENUATOR – QUEST ASSEMBLY DETAILS (METRIC) 606–31C
IMPACT ATTENUATOR – QUADGUARD II ASSEMBLY DETAILS 606–31D
CABLE GUARDRAIL 606–40
CABLE GUARDRAIL TERMINAL ANCHOR ASSEMBLY 606–41
INTERSECTING ROADWAY TERMINAL SECTION 606–46
BOX BEAM GUARDRAIL 606–50
BOX BEAM ONE–WAY DEPARTURE TERMINAL SECTION 606–52
BOX BEAM BRIDGE APPROACH SECTION – TYPES 1 & 2 606–53
BOX BEAM BRIDGE APPROACH SECTION – TYPE 3 . . . . . 606–53A
BOX BEAM ONE–WAY BRIDGE DEPARTURE SECTION 606–54
OPTIONAL BOX BEAM TERMINAL SECTION – WY–BET 606–55A

STANDARD SPECIFICATION SECTION AND DRAWING TITLE	DRAWING NUMBER

OPTIONAL BOX BEAM TERMINAL SECTION – BEAT 606–55B
WY–BET BOX BEAM TERMINAL SECTION DETAILS 606–56A
BEAT BOX BEAM TERMINAL SECTION DETAILS 606–56B
BOX BEAM TO W–BEAM TRANSITION SECTION 606–58
CONCRETE BARRIER RAIL 606–60
CONCRETE BARRIER RAIL ANCHORS 606–62
TALL CONCRETE BARRIER RAIL 606–64
CONCRETE BARRIER RAIL TRANSITION 606–66
CONCRETE BARRIER RAIL TERMINAL SECTION (ONE–WAY DEPARTURE) 606–68
SCHEDULE OF GUARDRAIL HARDWARE 606–80
GUARDRAIL HARDWARE 606–82
W–BEAM METAL GUARDRAIL HARDWARE 606–84
W–BEAM METAL GUARDRAIL HARDWARE 606–88
CABLE GUARDRAIL HARDWARE 606–92
CABLE GUARDRAIL HARDWARE 606–94
CABLE GUARDRAIL HARDWARE 606–95
BOX BEAM GUARDRAIL HARDWARE 606–97
BOX BEAM GUARDRAIL HARDWARE 606–98
BOX BEAM GUARDRAIL HARDWARE 606–99

SECTION 607: FENCES

FARM FENCE 607–00
WILDLIFE FRIENDLY FENCE 607–01
FARM ENTRANCE GATES 607–02
FENCE DETAILS 607–05
FENCE DETAILS 607–10
FENCE DETAILS 607–15
FENCING AT RIGHT OF WAY BREAKS 607–20
CHAIN LINK FENCE 607–25
8′ (2.4 m) WOOD SNOW FENCE W/ ANCHOR SYSTEM #1 607–30
12′ (3.6 m) WOOD SNOW FENCE W/ ANCHOR SYSTEM #1 607–35
WOOD SNOW FENCE ANCHOR SYSTEM #3 AND #1 DETAILS 607–40
WOOD SNOW FENCE ANCHOR SYSTEM #2 DETAILS 607–45
WILDLIFE FENCE 607–50
JACKLEG WIRE FENCE 607–55
JACKLEG POLE FENCE 607–60

SECTION 608: CONCRETE SIDEWALKS

CONCRETE SIDEWALK 608–05
NEW CONSTRUCTION PUBLIC SIDEWALK CURB RAMPS 608–15
ALTERATIONS TO EXISTING FACILITIES – PUBLIC SIDEWALK CURB RAMPS 608–20
PERPENDICULAR PUBLIC SIDEWALK CURB RAMPS 608–25
PARALLEL PUBLIC SIDEWALK CURB RAMPS 608–30
DIAGONAL PERPENDICULAR PUBLIC SIDEWALK CURB RAMPS 608–35
DETECTABLE WARNING DEVICES 608–40

SECTION 609: CURBS AND GUTTERS

CONCRETE VALLEY GUTTER 609–00
MISCELLANEOUS CURBS 609–05

STANDARD SPECIFICATION SECTION AND DRAWING TITLE	DRAWING NUMBER

DROP INLET APRONS 609–07
MEDIAN CONCRETE CURBS 609–10
CONCRETE MEDIAN CAPS 609–12

SECTION 610: ROADSIDE RE–VEGETATION

TOPSOIL AND SEEDING 610–00
TURF REINFORCEMENT MAT (TRM) AND ROLLED EROSION CONTROL (REC) 610–05

SECTION 611: CATTLE GUARDS

HEAVY DUTY CATTLE GUARD CAST–IN–PLACE 611–00
CAST–IN–PLACE CATTLE GUARD REBAR DETAILS 611–05
LIGHT DUTY CATTLE GUARD – PRECAST 611–10
LIGHT DUTY CATTLE GUARD – PRECAST (METRIC) 611–10
HEAVY DUTY CATTLE GUARD – PRECAST 611–15
PRECAST CONCRETE CATTLE GUARD BASE DETAILS 611–20

SECTION 613: RIPRAP AND SLOPE AND BANK PROTECTION

CONCRETE EDGE PROTECTION FOR METAL CULVERTS 613–06
CONCRETE EDGE PROTECTION FOR CONCRETE CULVERTS 613–08
CONCRETE SLOPE PROTECTION 613–10
INLET AND OUTLET HEADWALLS FOR RCP AND CMP PIPES 613–12
CULVERT RIPRAP 613–14
EMBANKMENT PROTECTION 613–16
DRAINAGE CHUTES 613–18

SECTION 615: IRRIGATION FACILITIES AND HEADWALLS

TRASHGUARD FOR CONCRETE IRRIGATION INLET AND OUTLET TRANSITION STRUCTURES 615–02
STANDARD CONCRETE IRRIGATION DIVISION BOXES 615–04
CONCRETE IRRIGATION INLET AND OUTLET TRANSITION FOR RCP AND CSP PIPES 615–06

SECTION 618: TRAFFIC CONTROL

CHANNELIZING DEVICES AND OBJECT MARKERS 618–00
CONSTRUCTION SIGN DETAILS 618–01
PORTABLE SIGN SUPPORT ASSEMBLY 618–02
BARRICADES 618–03
TWO–LANE CONSTRUCTION PROJECT 618–04
TWO–LANE CONSTRUCTION PROJECT WORK ZONES 618–08
TWO–LANE CONSTRUCTION PROJECT SEAL COAT 618–10
TWO–LANE CONSTRUCTION PROJECT LANE CLOSURE – FLAGGER CONTROLLED 618–12
TWO–LANE CONSTRUCTION PROJECT LANE CLOSURE – SIGNAL CONTROLLED 618–13
TWO–LANE EQUIPMENT ENTRANCES 618–14
TWO–LANE EQUIPMENT ENTRANCES 618–16
TWO–LANE CONSTRUCTION PROJECT DIVERSION 618–18
DIVIDED FOUR–LANE CONSTRUCTION PROJECT 618–20
TEMPORARY ENTRANCE RAMP MEDIAN CROSSOVER 618–21
TEMPORARY EXIT RAMP MEDIAN CROSSING 618–22
DIVIDED FOUR–LANE CONSTRUCTION PROJECT WORK ZONES 618–24
DIVIDED FOUR–LANE EQUIPMENT ENTRANCE 618–27

STANDARD SPECIFICATION SECTION AND DRAWING TITLE	DRAWING NUMBER

DIVIDED FOUR–LANE MEDIAN CROSSING 618–28
TEMPORARY FOUR–LANE TO TWO–LANE MEDIAN CROSSOVER 618–30
TEMPORARY TWO–LANE TO FOUR–LANE MEDIAN CROSSOVER 618–32
SHORT DURATION OR SHORT–TERM STATIONARY CREW SIGNING 618–34
MAINTENANCE GUIDELINE FOR SHORT–TERM TWO–LANE
CRACK SEALING WORK ZONE 618–M1
MAINTENANCE GUIDELINE FOR SHORT–TERM TWO–LANE
CHIP SEAL AND OVERLAY (PILOTED TRAFFIC) 618–M2
MAINTENANCE GUIDELINE FOR SHORT–TERM LANE CLOSURE
ON INTERSTATE 618–M3
MOBILE OPERATIONS 618–M4
LANE CLOSURE – FLAGGER CONTROLLED (URBAN TWO–LANE, TWO–WAY ROAD) 618–U01
WORK ZONE OCCUPIES ONE HALF OF ROAD
(LOW SPEED URBAN TWO–LANE, TWO–WAY ROAD) 618–U02
WORK ZONE IN CENTER OF ROAD (URBAN TWO–LANE, TWO–WAY ROAD) 618–U03
SIDEWALK CLOSURES AND BYPASS WALKWAY 618–U05
CROSSWALK CLOSURES AND PEDESTRIAN DETOURS 618–U10
LANE CLOSURE (URBAN TWO–LANE, TWO–WAY ROAD WITH TWO–WAY LEFT TURN LANE) 618–U15
TURN LANE CLOSURE (URBAN TWO–LANE, TWO–WAY ROAD
WITH TWO–WAY LEFT TURN LANE) 618–U16
RIGHT LANE CLOSURE (URBAN MULTI–LANE, UNDIVIDED ROAD) 618–U20
LEFT LANE CLOSURE (LOW SPEED URBAN MULTI–LANE, UNDIVIDED ROAD) 618–U25
LEFT LANE CLOSURES (LOW SPEED URBAN MULTI–LANE, UNDIVIDED ROAD) 618–U30
DOUBLE LANE CLOSURE (URBAN MULTI–LANE, UNDIVIDED ROAD) 618–U35
RIGHT LANE CLOSURE – WORK ZONE BEYOND INTERSECTION
(URBAN MULTI–LANE, UNDIVIDED ROAD) 618–U40
LEFT LANE CLOSURE – WORK ZONE BEYOND INTERSECTION
(URBAN MULTI–LANE, UNDIVIDED ROAD) 618–U45
DOUBLE LANE CLOSURE AT INTERSECTION (URBAN MULTI–LANE, UNDIVIDED ROAD) 618–U50
LEFT LANE CLOSURE (URBAN LOW SPEED, MULTI–LANE UNDIVIDED ROAD
WITH TWO–WAY LEFT TURN LANE) 618–U60

SECTION 619: SIGNS, DELINEATORS AND GUIDEPOSTS

SIGN CLEARANCES AND MOUNTING HEIGHTS 619–00
SIGN CLEARANCES AND MOUNTING HEIGHTS (METRIC) 619–00
TYPICAL RURAL AND URBAN APPROACHES 619–02
ALUMINUM SHEET INCREMENT SIGN CONSTRUCTION DETAILS 619–04
PLYWOOD SHEET INCREMENT GUIDE SIGN CONSTRUCTION DETAILS 619–06
GUIDE SIGN CLEARANCE AND MOUNTING DETAILS 619–08
SHEET ALUMINUM OVERLAY 619–10
TUBULAR SIGN POST DETAILS 619–12
BREAKAWAY AND FOUNDATION DETAILS FOR MULTIPLE GUIDE SIGN SUPPORTS 619–13
BREAKAWAY AND FOUNDATION DETAILS FOR MULTIPLE GUIDE SIGN SUPPORTS (METRIC) . 619–13
SQUARE TUBULAR SIGN POST BREAKAWAY DEVICES 619–14
TYPICAL STEEL POST MOUNTING DETAILS 619–16
CANTILEVER TYPE SIGN SUPPORT DETAILS FOR SIDEWALK AREAS 619–18
STRUCTURAL STEEL POST SIGN MOUNTING DETAILS 619–19
TREATED WOOD POLE SIGN MOUNTING AND SUPPORT DETAILS 619–20
TREATED WOOD POLE SIGN MOUNTING DETAILS 619–21

STANDARD SPECIFICATION SECTION AND DRAWING TITLE	DRAWING NUMBER

TREATED WOOD POLE OPTIONAL BACKBRACE 619–22
CHEVRON MOUNTING DETAILS 619–24
SPECIAL DESIGN ROUTE MARKER PANELS AND SHIELDS 619–26
SIGN HINGE DETAILS 619–30
MILEPOST (REFERENCE POST) DETAILS 619–32
DELINEATOR DETAILS 619–34
DELINEATOR PLACEMENT DETAILS 619–36
OBJECT MARKER DESIGN AND PLACEMENT DETAILS FOR OBSTRUCTIONS ADJACENT TO OR WITHIN HIGHWAYS 619–38
FLEXIBLE DELINEATORS 619–40
PERMANENT BARRICADE DESIGN DETAILS 619–42
INSTALLATION DATE TAGS 619–44

SECTION 620: PAVEMENT MARKING APPLICATION

PAVEMENT MARKINGS (LETTERS) 620–00
PAVEMENT MARKINGS (NUMBERS) 620–05
PAVEMENT MARKINGS (WORDS) 620–10
PAVEMENT MARKINGS (ARROWS) 620–15
PAVEMENT MARKINGS (SYMBOLS) 620–20
PAVEMENT MARKINGS (SYMBOLS) 620–25

SECTION 621: REMOVE, RE–SET AND ADJUST FACILITIES

MANHOLE AND VALVE BOX ADJUSTMENT DETAILS 621–00
OPTIONAL MANHOLE AND VALVE BOX ADJUSTMENT DETAILS 621–05

SECTION 623: MAILBOXES

APPROACH MAILBOX TURNOUT 623–10
MAILBOX TURNOUT 623–15
MAILBOX DETAIL 623–20
OPTIONAL MAILBOX DETAIL 623–25
TEMPORARY MAILBOX SUPPORT 623–30
TEMPORARY MAILBOX SUPPORT BRACKET DETAILS 623–35

MISCELLANEOUS

U–TURN MEDIAN OPENINGS ON CONTROLLED ACCESS HIGHWAYS 900–00
ADJUSTABLE MONUMENT BOX 900–15

&	AND
@	AT
A.A.D.T.	ANNUAL AVERAGE DAILY TRAFFIC
AASHTO	AMERICAN ASSOCIATION OF STATE HIGHWAY AND TRANSPORTATION OFFICIALS
AB.	ABRUPT
A.C.	ALUMINUM CAP OR ASPHALT CEMENT
ADD. EXC.	ADDITIONAL EXCAVATION
ADJ.	ADJUSTED
A.D.T.	AVERAGE DAILY TRAFFIC
AGC	ASSOCIATED GENERAL CONTRACTORS OF AMERICA
AGG.	AGGREGATE
AH.	AHEAD
ANSI	AMERICAN NATIONAL STANDARDS INSTITUTE
APP.	APPROACH
APPL.	APPLICATION
APPROX.	APPROXIMATE
ARTBA	AMERICAN ROAD AND TRANSPORTATION BUILDERS ASSOCIATION
ASPH.	ASPHALT
ASTM	AMERICAN SOCIETY FOR TESTING & MATERIALS
AVE.	AVENUE
AVG.	AVERAGE
AWS	AMERICAN WELDING SOCIETY
AZ.	AZIMUTH
BAL.	BALANCE
BBL. OR BBLS.	BARREL OR BARRELS
B.C.	BRASS CAP
B.C.R.	BEGIN CURB RETURN
B.E. OR BE	BRIDGE END
BEG.	BEGIN
BIT.	BITUMINOUS OR BITUMEN
BK.	BACK OR BANK
BLDG.	BUILDING
BLK.	BLOCK
B.L.M. OR BLM	U.S. BUREAU OF LAND MANAGEMENT
BLVD.	BOULEVARD
B.M.	BENCH MARK
BNDRY.	BOUNDARY
BOT.	BOTTOM
BR.	BRIDGE
B.R.	BASE OF RAIL
BRG.	BEARING
B.S. OR BS	BACKSIGHT
B.S.T.	BITUMINOUS SURFACE TREATMENT
B.W.FE.	BARBED WIRE FENCE
C	CUT
C/A	CONTROL OF ACCESS
C.A.C. OR CAC	CRUSHED AGGREGATE COURSE
CALC.	CALCULATED
C.A.P. OR CAP	CORRUGATED ALUMINUM PIPE
CATV	CABLE TV
CB.	CURB
C.B.	CATCH BASIN
C.B.W.	CONCRETE BLOCK WALL
C.C.	CLOSING CORNER
CDTN.	CONDITION
CEM.	CEMENT
C&G	CURB & GUTTER
C.G.	CATTLE GUARD
CH.	CHANNEL OR CHAIN
CH.CH.	CHANNEL CHANGE
CHD.	CHORD
CHIS."x"	CHISELED CROSS
C.I.	CURB INLET
CIR.	CIRCLE
CL.	CLASS OR CLEARANCE
CL-4F,5F	CHAIN LINK FENCE (W/ HEIGHT - ENGLISH)
CL-1.2F,1.5F	CHAIN LINK FENCE (W/ HEIGHT - METRIC)
C/L OR ℄	CENTERLINE
C.M.P. OR CMP	CORRUGATED METAL PIPE
C.N.	CONCRETE NAIL
CO.	COUNTY OR COMPANY
C.O.	CLEAN OUT
COMP.	COMPACTION
CONC.	CONCRETE
COND.(TEL.)	CONDUIT (SPECIFY TYPE)
CONN.	CONNECTION
CONST.	CONSTRUCTION
CONST. PMT.	CONSTRUCTION PERMIT
COR.	CORNER
CORR.	CORRECTED OR CORRUGATION
COV.	COVER
C.P.	CATCH POINT
CR.	CRUSHED OR CREEK
CRS.	COURSE
C.S. OR CS	CURVE TO SPIRAL
C.S.F. OR CSF	COMBINATION SCALE FACTOR
C.S.P. OR CSP	CORRUGATED STEEL PIPE
C.S.P.A OR CSPA	CORRUGATED STEEL PIPE ARCH
CT.	COURT
C.T.B. OR CTB	CEMENT TREATED BASE
CTR.	CENTER
C.T.S. OR CTS	CRUSHED TOP SURFACING
CULV.	CULVERT
C.Y.	CUBIC YARD
D	DEGREE OF CURVATURE, DISTRIBUTION OF TRAFFIC, DIAMETER, OR DEPTH
DBL.	DOUBLE
D_c	DEGREE OF CURVATURE (WITH SPIRALS)
D.D.	DOWN DRAIN
DE	DIFFERENCE IN ELEVATION
DEFL.	DEFLECTION
DESC.	DESCRIPTION
DEST.	DESTROYED
DET.	DETOUR OR DETAIL
DETC.	DETECTOR
D.H.	DRILL HOLE
D.H.V.	DESIGN HOURLY VOLUME
D.I.	DROP INLET
DIA.	DIAMETER
DIST.	DISTANCE OR DISTRICT
DN.	DOWN
DP.	DEEP
DR.	DRAIN OR DRIVE
DT.	DITCH
DTL.	DETAIL OR DETAILED
DWG.	DRAWING
DY.	DAYLIGHT
E	EAST OR EXTERNAL DISTANCE
EASE. OR ESMT.	EASEMENT
E.B. OR EB	EASTBOUND
E.C.R.	END CURB RETURN
E.D.M. OR EDM	ELECTRONIC DISTANCE MEASUREMENT OR MEASURER
E.G.	EDGE OF GUTTER
ELEV. OR EL.	ELEVATION
ELONG.	ELONGATED
ELY.	EASTERLY
EMB.	EMBANKMENT
EMUL.	EMULSIFIED
E.O.	EDGE OF OIL
E.P.	EDGE OF PAVEMENT
EQ.	EQUATION
E_s	EXTERNAL DISTANCE (WITH SPIRALS)
E.S.	EDGE OF SHOULDER
E.T.W. OR ETW	EDGE OF TRAVELED WAY
EW.	END WALL
EX.	EXISTING
EXC.	EXCAVATION
EXT.	EXTENSION
EXWY.	EXPRESSWAY

DETAILED DRAWING

REFERENCE STANDARD SPEC. SECTION 101

DWG. NO. 101-05

ABBREVIATIONS

EFFECTIVE: SEPTEMBER 2014

MDT MONTANA DEPARTMENT OF TRANSPORTATION

F	FILL
F.A.	FEDERAL AID
F.C.	FLOOD CONTROL
FND.	FOUND
FDN.	FOUNDATION
FE.	FENCE
FERT.	FERTILIZER
F.E.T.S. OR FETS	FLARED END TERMINAL SECTION
F.G. OR FG	FINISHED GRADE OR FRONT OF GUTTER
F.G.S.	FINISHED GRADE STAKE
F.H.	FIRE HYDRANT
FHWA	FEDERAL HIGHWAY ADMINISTRATION
FIN.	FINISH
FL.	FLUSH
F.L. OR FL	FLOW LINE
F.O. OR FO	FIBER OPTIC CABLE
F.P.	FENCE POST
FR. OR FR	FRONTAGE
FR. RD.	FRONTAGE ROAD
F.S. OR FS	FORESIGHT
FT.	FOOT OR FEET
FTG.	FOOTING
FUT.	FUTURE
FWY.	FREEWAY
g	GRAM
G	GRADING
GA.	GAUGE
GAL.	GALLON
GALV.	GALVANIZED
GAR.	GARAGE
GEOD.	GEODETIC
G.L.	GAS LINE
G.L.O.	GENERAL LAND OFFICE
G.P.S. OR GPS	GLOBAL POSITIONING SYSTEM
GR.	GRADE
G.R.	GUARDRAIL
GRD	GRID
GRND.	GROUND
GR.SEP.	GRADE SEPARATION
G.S.	GRAVEL SURFACING
G.S.P. OR GSP	GALVANIZED STEEL PIPE
GTR.	GUTTER
G.V.	GAS VALVE
ha	HECTARE
HDWL.	HEADWALL
HG.	HEADGATE
H.I. OR HI	HEIGHT OF INSTRUMENT
HO.	HOUSE
HOR.	HORIZONTAL
H.P.	HINGE POINT
HT.	HEIGHT
H&T	HUB & TACK
H.W.	HIGH WATER
HWY.	HIGHWAY
I	INTERSTATE
I.C.	INCIDENTAL CONSTRUCTION
I.D.	INSIDE DIAMETER
I.E.	INVERT ELEVATION
IN.	INCH
INC.	INCORPORATED OR INCREMENT
INCL.	INCLUDED
INSTR.	INSTRUMENT
INT.	INTERSECTION
INTCH.	INTERCHANGE
INV.	INVERT
I.P.	IRON PIN
IRR.	IRRIGATION
I.R.T.S. OR IRTS	INTERSECTING ROADWAY TERMINAL SECTION
JCT.	JUNCTION
J.P.	JOINT USE POLE
kg	KILOGRAM
km	KILOMETER
L	LENGTH OF CURVE, LITER OR ANGLE IRON
LB.	POUND
L_c	LENGTH OF CIRCULAR CURVE
L.C.	LONG CHORD
L.D.	LOOP DETECTOR
LENG.	LENGTH OR LENGTHEN
L.F.	LINEAR FOOT
LN.	LANE
L_s	LENGTH OF SPIRAL
L.S.	LAND SURVEYOR
LT.	LEFT
m	METER
m^2	SQUARE METER
m^3	CUBIC METER
mm	MILLIMETER
mm^2	SQUARE MILLIMETER
MATL.	MATERIAL
MAX.	MAXIMUM
M.C. OR MC	MEDIUM CURING
MDT	MONTANA DEPARTMENT OF TRANSPORTATION
MEAS.	MEASURED
MED.	MEDIAN
MH.	MANHOLE
MIN.	MINIMUM, MINERAL OR MINUTE
MISC.	MISCELLANEOUS
MKR.	MARKER
M.L.	MAINLINE
MNCPL.	MUNICIPAL
M.O.	MID ORDINATE
MON.	MONUMENT
M.P.C. OR MPC	MID-POINT OF CURVE
MUTCD	MANUAL ON UNIFORM TRAFFIC CONTROL DEVICES
M.Y.	MILE YARD
N	NORTH
N.B. OR NB	NORTHBOUND
N.C.	NORMAL CROWN
N.E.	NORTHEAST
N.G. OR NG	NATURAL GAS
N.G.S. OR NGS	NATIONAL GEODETIC SURVEY
NL.	NAIL
NLY.	NORTHERLY
NO. OR #	NUMBER
N.W.	NORTHWEST
N.W.EL.	NORMAL WATER ELEVATION
O. OR O/S	OFFSET
O.C.	ON CENTERS OR OVERHEAD CROSSING
O.D.	OUTSIDE DIAMETER
O.G.	OLD GROUND OR ORIGINAL GROUND
OH.	OVERHANG OR OVERHEAD
OHWM	ORDINARY HIGH WATER MARK
O'PASS	OVERPASS
P	POWER CABLE, PIPE OR PRIMARY
P. OR PG.	PAGE
PAVT.	PAVEMENT
P.B.	PULL BOX
P.C. OR PC	POINT OF CURVE (BEGINNING)
P.C.C. OR PCC	POINT OF COMPOUND CURVE OR PORTLAND CEMENT CONCRETE
P.C.S.	PROJECT CONTROL SYSTEM
P.E. OR PE	PRELIMINARY ENGINEERING OR PROFESSIONAL ENGINEER

DETAILED DRAWING

REFERENCE STANDARD SPEC. SECTION 101

DWG. NO. 101-06

ABBREVIATIONS

EFFECTIVE: SEPTEMBER 2014

MDT MONTANA DEPARTMENT OF TRANSPORTATION

PEN.	PENETRATION
PERF.	PERFORATED
P.I. OR PI	POINT OF INTERSECTION
PL.	PLACE, PLATE OR PLANT
P.L.	PROPERTY LINE
PLAS.	PLASTIC
P.M.	PRINCIPAL MERIDIAN OR PUNCH MARK
P.M.B.	PLANT MIX BASE
P.M.P.	PERFORATED METAL PIPE
P.M.S. OR PMS	PLANT MIX SURFACING
PMT.	PERMIT
P.O.C. OR POC	POINT ON CURVE
P.O.L. OR POL	POINT ON LINE
P.O.S. OR POS	POINT ON SPIRAL
P.O.S.T. OR POST	POINT ON SEMI-TANGENT
P.O.T. OR POT	POINT ON TANGENT
P.O.V.C. OR POVC	POINT ON VERTICAL CURVE
P.P. OR PP	POWER POLE
PP.	PAGES
PREST.	PRESTRESSED
PRIM.	PRIMARY
PROC.	PROCESSING
PROJ.	PROJECT OR PROJECTED
PROT.	PROTECT, PROTECTOR OR PROTECTION
P.T. OR PT	POINT OF TANGENT (END OF CURVE)
PT.	POINT
P.T.W. OR PTW	PRESENT TRAVELED WAY
PVC. OR PVC	POLYVINYL CHLORIDE
PVT.	PRIVATE
PWR. OR PWR	POWER (LINES)
Q	PEAK DISCHARGE (WATER)
QTY.	QUANTITY
R	RANGE, RADIUS OR RISE
R.A.C.E.T. OR RACET	ROAD APPROACH CULVERT END TREATMENT
R.A.P. OR RAP	RECYCLED ASPHALT PAVEMENT
R_c	SPIRAL CURVE RADIUS
R.C. OR RC	RAPID CURING
R.C.B. OR RCB	REINFORCED CONCRETE BOX
R.C.P. OR RCP	REINFORCED CONCRETE PIPE
R.C.P.A. OR RCPA	REINFORCED CONCRETE PIPE ARCH
RD.	ROAD
RDL.	RADIAL
RDWY.	ROADWAY
REC.	RECORD
REF.	REFERENCE
REINF.	REINFORCEMENT
RET.W.	RETAINING WALL
RIV.	RIVER
R.M.	REFERENCE MONUMENT
R.P. OR RP	REFERENCE POINT, POST OR RADIUS POINT
R.R.	RAILROAD
RT.	RIGHT OR ROUTE
RTE.	ROUTE
R/W	RIGHT OF WAY
RY.	RAILWAY
S	RATE OF FULL SUPERELEVATION, SLOPE IN FT. PER FT., SPAN, SOUTH OR SECONDARY
SA.	SATELLITE (FOR TRAVERSE USE)
SAN.SEW.	SANITARY SEWER
S.B. OR SB	SOUTHBOUND
S.C. OR SC	SPIRAL TO CURVE OR SLOW CURING
SCH.	SCHEDULE
SDWK.	SIDEWALK
S.E.	SOUTHEAST
SEC.	SECTION, SECOND OR SECONDARY
SEL.	SELECT
S.G., SG OR SUBGR.	SUBGRADE
SHLD. OR SH.	SHOULDER
SHT.	SHEET
SING.	SINGLE
SIP.	SIPHON
S.L.D.	SEA LEVEL DATUM
SLOT.DR.	SLOTTED DRAIN
SLP.STK.	SLOPE STAKE
SLY.	SOUTHERLY
S.P.	STAND PIPE OR STATE PLANE
SPEC. PROV.	SPECIAL PROVISION
S.P.H.P.	STEEL PIPE, HIGH PRESSURE
SPK.	SPIKE
SQ.	SQUARE
S.S. OR SS	EMULSIFIED ASPHALT
S.S.P.P. OR SSPP	STRUCTURAL STEEL PLATE PIPE
S.S.P.P.A. OR SSPPA	STRUCTURAL STEEL PLATE PIPE ARCH
S.S.P.P.A.C. OR SSPPAC	STRUCTURAL STEEL PLATE PIPE ARCH CULVERT
S.T. OR ST	SPIRAL TO TANGENT
ST.	STREET
STA.	STATION
STD.	STANDARD
STD. SPEC.	STANDARD SPECIFICATIONS
STK.	STAKED OR STAKE
STL.	STEEL
STM.	STORM DRAIN
STPD.	STAMPED
STR.	STRUCTURE OR STRAIGHT
SUBD.	SUBDIVISION
SURF.	SURFACE OR SURFACING
SURV.	SURVEY
S.W.	SOUTHWEST OR SIDEWALK
S.Y.	SQUARE YARD
†	METRIC TON
T	TOWNSHIP, TANGENT LENGTH, PERCENT TRUCKS, OR THICKNESS
TAN.	TANGENT
T.B.C. OR TBC	TOP BACK OF CURB
T.B.M.	TEMPORARY BENCH MARK
TBR.	TIMBER
TEL. OR TEL	TELEPHONE
TEL.C.	TELEPHONE CABLE
TELG.	TELEGRAPH
TEL.P.	TELEPHONE POLE
TEMP.	TEMPERATURE OR TEMPORARY
THK.	THICKNESS
TK.	TACK
TOL.	TOLERANCE
TOPOG.	TOPOGRAPHIC
T.P. OR TP	TURNING POINT
TR.	TRACT
TRANS.	TRANSMISSION LINE OR TRANSITION
TRAV.	TRAVERSE
TRIA.	TRIANGULATION
T.R.M.	TRURF REINFORCEMENT MAT
T_s	LENGTH OF TANGENT (CURVE WITH SPIRALS)
T.S. OR TS	TANGENT TO SPIRAL
T.T. OR TT	TRANSMISSION TOWER
TYP.	TYPICAL
U	UNIT
U.G.	UNDERGROUND
UNCL.	UNCLASSIFIED
U'PASS	UNDERPASS
U.S.C. & G.S.	U.S. COAST & GEODETIC SURVEY
U.S.C.E.	U.S. CORPS OF ENGINEERS
U.S.F.S.	U.S. FOREST SERVICE
U.S.G.S.	U.S. GEOLOGICAL SURVEY
U.S.P.L.S.	U.S. PUBLIC LAND SURVEY

DETAILED DRAWING

REFERENCE STANDARD SPEC. SECTION 101

DWG. NO. 101-07

ABBREVIATIONS

EFFECTIVE: SEPTEMBER 2014

MDT MONTANA DEPARTMENT OF TRANSPORTATION

V	DESIGN SPEED OR VELOCITY
V.A.B.M.	VERTICAL ANGLE BENCH MARK
V.C. OR VC	VERTICAL CURVE
V.C. CORR.	VERTICAL CURVE OFFSET CORRECTION
V.C.M.	VERTICAL CONTROL MONUMENT
V.C.P.	VITRIFIED CLAY PIPE
VEH.	VEHICULAR
VERT. OR VT.	VERTICAL
VIT.	VITRIFIED
V.P.	VENT PIPE
V.P.C. OR VPC	VERTICAL POINT OF CURVE
V.P.I. OR VPI	VERTICAL POINT OF INTERSECTION
V.P.T. OR VPT	VERTICAL POINT OF TANGENCY
W	WEST OR WIDTH
W/	WITH
W.B. OR WB	WESTBOUND
W.C.	WITNESS CORNER
W.L.	WATER LINE
WLY.	WESTERLY
W/O	WITHOUT
W.P.	WING POINT
W.S.	WATER SERVICE OR WARPED OR VARIABLE SLOPE
WT.	WEIGHT
W.T.	WATER TABLE
W.V.	WATER VALVE
W.W.	WING WALL OR WOVEN WIRE
YD	YARD
YD^2	SQUARE YARD
YD^3	CUBIC YARD
XING.	CROSSING
XSEC.	CROSS SECTION

DETAILED DRAWING

REFERENCE
STANDARD SPEC.
SECTION 101

DWG. NO.
101-08

ABBREVIATIONS

EFFECTIVE: SEPTEMBER 2014

MDT MONTANA DEPARTMENT OF TRANSPORTATION

TITLE SHEET

- PRIMARY ROAD **
- PRIMITIVE ROAD
- PROPOSED ROAD
- GRADED ROAD
- BLADED ROAD
- PRIMITIVE ROAD
- GRAVELED ROAD (CADD *)
- PAVED ROAD
- FEDERAL AID ROUTING (ON EXISTING ROAD)
- FEDERAL AID ROUTING (NON-EXISTING ROAD)
- INTERCHANGE
- STRUCTURE
- F.F. FREE FERRY
- T.F. TOLL FERRY
- HIGHWAY TUNNEL
- PASS
- RAILROAD
- RESERVATION LINE
- STATE & NATIONAL LINE
- COUNTY LINE
- TOWNSHIP & SECTION LINE
- 10 INTERSTATE
- 10 U.S. HIGHWAY
- 23 STATE HIGHWAY (CADD *)
- CITY OR TOWN
- AIR FIELD
- DAM
- BUILDING OR HOUSE
- BRIDGE

** PRIMARY ROADS ARE 0.08" [2.03 mm] WIDE.
ALL OTHERS ARE 0.05" [1.27 mm] WIDE.

PROFILE

- FLOWLINE AT ℄ CULVERT
- FLOWLINE AT ℄ IRRIGATION SYPHON
- FLOWLINE AT ℄ CONCRETE BOX CULVERT

CROSS SECTIONS

- POWER POLE (NO. OF WIRES AND VOLTAGE)
- TELEPHONE POLE (NO. OF WIRES)
- TELEGRAPH POLE (NO. OF WIRES)
- GUY POLE
- GUY AND ANCHOR
- Wetland Boundary WETLAND BOUNDRY

PLAN

- STATE & NATIONAL LINE
- COUNTY LINE
- CITY OR TOWN BOUNDARIES
- TOWNSHIP OR SECTION LINE
- SECTION LINE (SHOWING CORNER SOLID IF FOUND - OPEN IF NOT FOUND) (1/16 CORNER, 1/4 CORNER, 6 5 7 8)
- CLOSING CORNER
- MEANDER CORNER
- OWNERSHIP TIE
- PROPERTY CORNER
- CALCULATED R/W MONUMENT
- FOUND OR SET MONUMENT
- PROPERTY LINE
- LIMITED ACCESS CONTROL
- AC FULL ACCESS CONTROL
- ELAC EXISTING LIMITED ACCESS CONTROL
- EFAC EXISTING FULL ACCESS CONTROL
- EXISTING ACCESS CONTROL (LEGACY PROJECTS ONLY)
- EXISTING RIGHT-OF-WAY
- HIGHWAY RIGHT-OF-WAY (R/W, +90, +00, +10)
- RAILROAD RIGHT-OF-WAY (RR R/W)
- BASE OR SURVEY LINE (PC, STA, N 89° 40' E)
- ℄ OF STAKED LINE WHEN A PROJECTION IS MADE (N 89° 40' E)
- RAILROAD
- TRAVELED WAY
- LEVEE OR DIKE (CADD *)
- RETAINING WALL (CADD *)
- PROPOSED RETAINING WALL (CADD *)
- RIPRAP
- GEOTEXTILE PATTERN
- CONCRETE SIDEWALK
- CONCRETE CURB (NEW, IN PLACE)
- EXISTING FENCE
- PROPOSED FENCE
- SNOW FENCE
- PROPOSED SNOW FENCE
- EXISTING GUARDRAIL
- PROPOSED GUARDRAIL
- EXISTING CONCRETE MEDIAN RAIL
- TEN MILE CREEK SMALL DRAINAGE
- LARGE DRAINAGE
- RESERVOIR WITH DAM
- LAKE
- MARSH, SWAMP (CADD *)

PLAN

- OHWM ORDINARY HIGH WATER MARK
- WL WETLAND DELINEATION
- EXISTING WETLAND AREA
- DELINEATED WETLAND AREAS
- IMPACTED WETLANDS
- BLUFFS OR CLIFFS
- WATER'S EDGE
- DEPRESSION
- DEPRESSION OBSCURE
- DITCH BLOCK
- EXISTING DITCH OR FLOW LINE
- PROPOSED DITCH
- CULVERT WITH HEADWALL (IN PLACE)
- CULVERT WITHOUT HEADWALL (IN PLACE)
- PROPOSED CULVERT
- DROP OR MEDIAN INLET
- W WATER VALVE BOX
- MANHOLE (LABEL AS TO TYPE OR SERVICE)
- FIRE HYDRANT
- WATER WELL / WELL (CADD *)
- CATCH BASIN
- CONDUIT & WIRING
- P POWER CABLE
- PWR EXISTING UNDERGROUND POWER (CADD *)
- PWR EXISTING OVERHEAD POWER (CADD *)
- TEL or TELG TELEPHONE OR TELEGRAPH CABLE
- TEL EXISTING UNDERGROUND TELEPHONE (CADD *)
- TEL EXISTING OVERHEAD TELEPHONE (CADD *)
- W WATER LINE
- W EXISTING WATER LINE (CADD *)
- STM STORM SEWER
- STM EXISTING STORM DRAIN (CADD *)
- STM PROPOSED STORM DRAIN (CADD *)
- SAN SANITARY SEWER
- SAN EXISTING SANITARY SEWER (CADD *)
- SAN PROPOSED SANITARY SEWER (CADD *)
- NG NATURAL GAS LINE
- NG EXISTING NATURAL GAS LINE (CADD *)
- GAS OR OIL GASOLINE OR OIL LINE
- GAS EXISTING GAS PIPE LINE (CADD *)
- OIL EXISTING OIL PIPE LINE (CADD *)
- FO EXISTING UNDERGROUND FIBER CABLE (CADD *)
- TV EXISTING UNDERGROUND TV CABLE (CADD *)
- MIS EXISTING UNDERGROUND MISSILE CABLE (CADD *)

PLAN

- SINGLE POST SIGN
- MULTIPLE POST SIGN
- TELEGRAPH POLE
- TELEPHONE POLE
- T TELEPHONE PEDESTAL
- POWER POLE
- P POWER PEDESTAL
- TROLLEY POLE
- LIGHT POLE
- GUY POLE
- GUY WIRE & ANCHOR
- TRANSMISSION TOWER
- G GAS VALVE
- OIL OR GAS WELL
- TANKS
- TREE OR BUSH
- TREE LINE
- HEDGE LINE
- MB MAILBOX
- EXISTING APPROACH
- PROPOSED APPROACH
- EXISTING CATTLE GUARD
- PROPOSED CATTLE GUARD
- GRAVEL PIT
- SCALES
- MILE POST
- PROJECT MARKER
- STATION MARKER
- ℄ CENTERLINE
- DEFLECTION ANGLE
- Δ_c DEFLECTION ANGLE (CIRCULAR CURVE WITH SPIRALS)
- Θ_s DEFLECTION ANGLE OF ONE SPIRAL
- N NORTH ARROW
- GATE

* SYMBOLOGY USED ON CADD DRAFTED PLANS

UNITS SHOWN IN BRACKETS [] ARE METRIC AND ARE IN MILLIMETERS (mm) UNLESS OTHER UNITS ARE SHOWN.

DETAILED DRAWING	
REFERENCE STANDARD SPEC. SECTION 101	DWG. NO. 101-10
SYMBOLS	
EFFECTIVE: SEPTEMBER 2014	

MDT MONTANA DEPARTMENT OF TRANSPORTATION

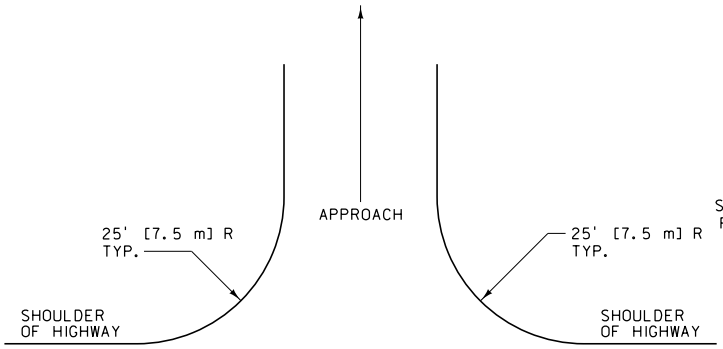

NOTE: MAX. SKEW ANGLE IS 30°.

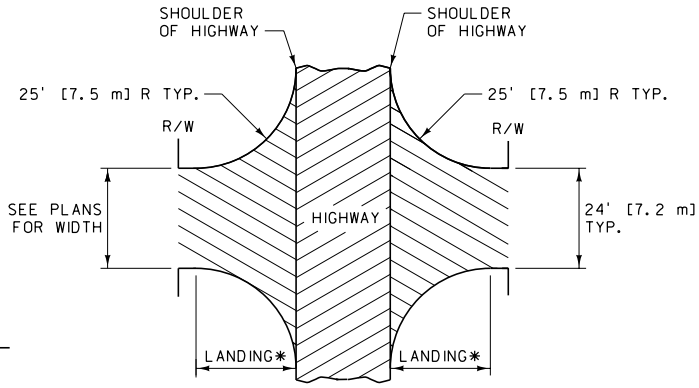

* 25.0' [7.5 m] MIN. FOR PRIVATE OR FIELD APP.
75.0' [25.0 m] MIN. FOR COUNTY AND MAIN ROADS.

LANDING GRADE (-3% DESIRABLE, +3% ALLOWABLE).

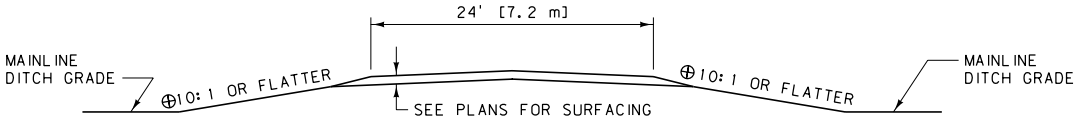

TYPICAL SECTION WITHIN CLEAR ZONE

USE A PIPE AS NECESSARY FOR DRAINAGE. INSTALL CULVERTS OUTSIDE THE CLEAR ZONE OR PROVIDE END TREATMENT.

⊕PROVIDE 6:1 SLOPES AT A MINIMUM.

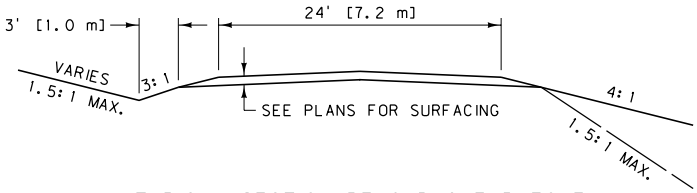

TYPICAL SECTION BEYOND CLEAR ZONE

BACK SLOPES **	
0' - 5' [0.0 m - 1.5 m]	4:1
5' - 10' [1.5 m - 3.0 m]	2:1
OVER 10' [3.0 m]	1.5:1

FILL SLOPES **	
0' - 10' [0.0 m - 3.0 m]	4:1
10' - 20' [3.0 m - 6.0 m]	2:1
OVER 20' [6.0 m]	1.5:1

NOTES:

1. APPROACH GRADE BEYOND LANDING IS NOT TO EXCEED 10% UNLESS TRAFFIC VOLUMES AND COST INDICATE SUCH TO BE JUSTIFIABLE.
2. CONSTRUCT APPROACHES TO FIT LOCAL CONDITIONS.
3. SECURE WRITTEN PERMISSION FROM LANDOWNER FOR WORK BEYOND THE RIGHT-OF-WAY.

** CRITERIA SHOWN ARE FOR PRIVATE AND FARM FIELD APPROACHES. FOR COUNTY AND MAIN ROADS USE ESTABLISHED STANDARDS FOR APPLICABLE FUNCTIONAL CLASS.

UNITS SHOWN IN BRACKETS [] ARE METRIC AND ARE IN MILLIMETERS (mm) UNLESS OTHER UNITS ARE SHOWN.

DETAILED DRAWING	
REFERENCE STANDARD SPEC. SECTION 203	DWG. NO. 203-05
APPROACHES	
EFFECTIVE: SEPTEMBER 2014	

MDT MONTANA DEPARTMENT OF TRANSPORTATION

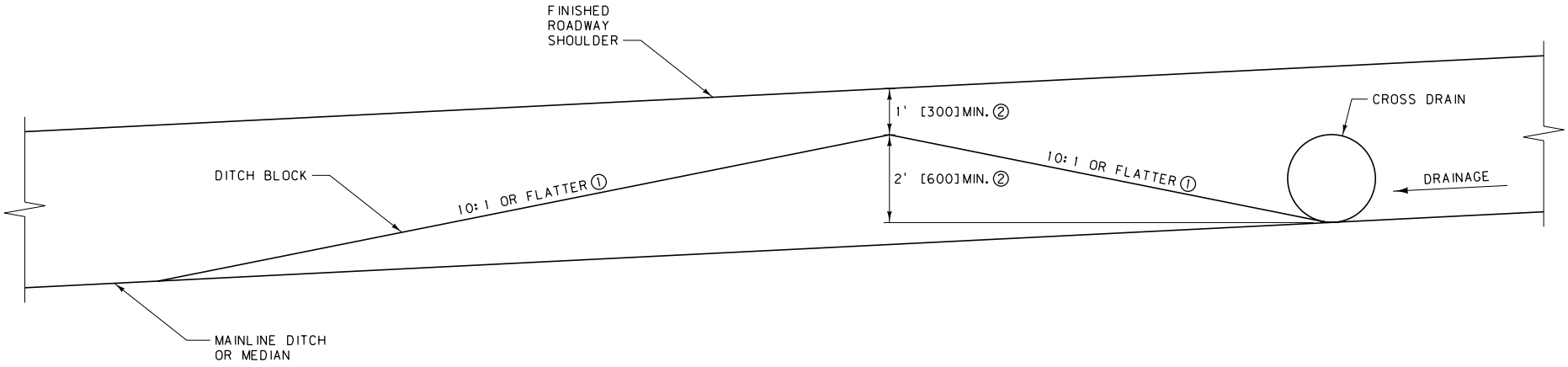

NOTES:

① CONSTRUCT DITCH BLOCKS TO FIT LOCAL CONDITIONS. WHEN CONDITIONS DO NOT ALLOW 10: 1 SLOPES, USE 6: 1 SLOPES.

② HEIGHTS SHOWN ARE MINIMUMS. SET HEIGHT OF DITCH BLOCKS BASED ON THE CULVERT DIAMETER OR ON THE ELEVATION SHOWN IN THE PLANS.

UNITS SHOWN IN BRACKETS [] ARE METRIC AND ARE IN MILLIMETERS (mm) UNLESS OTHER UNITS ARE SHOWN.

DETAILED DRAWING	
REFERENCE STANDARD SPEC. SECTION 203	DWG. NO. 203-20
DITCH BLOCKS	
EFFECTIVE: SEPTEMBER 2014	

MDT MONTANA DEPARTMENT OF TRANSPORTATION

SCHEDULE OF BEST MANAGEMENT PRACTICES (BMPs)		
NAME	DESCRIPTION	DTL. DWG. NO. (208-##)
TEMPORARY EROSION CONTROL BMPs (EC)		
EC-3	HYDRAULIC MULCH	04
EC-5	SOIL BINDERS	08
EC-6	STRAW MULCH	10
EC-7	ROLLED EROSION CONTROL PRODUCTS	12
EC-9	EARTH DIKES, DRAINAGE SWALES, AND LINED DITCHES	16
EC-10	TEMPORARY OUTLET AND VELOCITY DISSIPATION DEVICES	18
EC-11	TEMPORARY SLOPE DRAINS	20
EC-12	SLOPE ROUGHENING	22
EC-14	VEGETATED BUFFER	26
TEMPORARY SEDIMENT CONTROL BMPs (SC)		
SC-1	SILT FENCE	30
SC-2	DESILTING BASIN	32
SC-3	SEDIMENT TRAP	34
SC-4	CHECK DAMS	36
SC-5	FIBER ROLLS	38
SC-6	GRAVEL BAG BERM	40
SC-8	SAND BAG BARRIERS	42
SC-9	STRAW BALE BARRIERS	44
SC-10	STORM DRAIN INLET PROTECTION	46
SC-11	DUGOUT DITCH BASIN	48
TRACKING CONTROL BMPs (TC)		
TC-1	STABILIZED CONSTRUCTION ENTRANCE/EXIT	56
TC-3	ENTRANCE/EXIT TIRE WASH	58
NON-STORM WATER MANAGEMENT BMPs (NS)		
NS-4	TEMPORARY STREAM CROSSINGS	60

DETAILED DRAWING

REFERENCE
STANDARD SPEC.
SECTION 208

DWG. NO.
208-00

SCHEDULE OF
BEST MANAGEMENT PRACTICES

EFFECTIVE: SEPTEMBER 2014

MDT MONTANA DEPARTMENT OF TRANSPORTATION

SYMBOL: ——— HM ———

HYDRAULIC MULCH EC-3:

1. HYDRAULIC MULCH CONSISTS OF APPLYING A MIXTURE OF SMALL PIECES OF CELLULOSE FIBERS WHICH CAN BE MADE FROM SHREDDED WOOD FIBERS OR RECYCLED PAPER AND A STABILIZING EMULSION AND TACKIFIER (SUBJECT TO PROJECT MANAGER'S DISCRETION) USING HYDRO-MULCHING EQUIPMENT. HYDRAULIC MULCH IS APPLIED TO DISTURBED AREAS REQUIRING TEMPORARY PROTECTION UNTIL PERMANENT VEGETATION IS ESTABLISHED OR DISTURBED AREAS THAT MUST BE RE-DISTURBED FOLLOWING AN EXTENDED PERIOD OF INACTIVITY.

2. APPLY HYDRAULIC MULCH A MINIMUM OF 24 HOURS PRIOR TO A STORM EVENT TO ALLOW FOR ADEQUATE DRYING.

3. HYDRAULIC MULCH SELECTION MUST MEET MDT SPECIFICATIONS AND BE APPROVED BY THE PROJECT MANAGER PRIOR TO PLACEMENT. ROUGHEN EXISTING EMBANKMENT FOLLOWING GUIDELINES SPECIFIED IN BMP EC-12. WHEN EITHER TEMPORARY SEEDING OR PERMANENT SEEDING IS COMBINED WITH THE HYDRAULIC MULCH BMP, COMPLETE SEEDING OPERATIONS PRIOR TO HYDRAULIC MULCHING OPERATIONS. REFER TO BMPs EC-4 AND EC-15 FOR SEEDING REQUIREMENTS. REMOVE ANY OVER SPRAY FROM ROADWAYS OR SIDEWALKS IMMEDIATELY FOLLOWING APPLICATION.

4. RECYCLED PAPER MULCH SHOULD CONTAIN 100% POST CONSUMER RECYCLED PAPER.

5. REFER TO BMP EC-5 (SOIL BINDER) FOR TACKIFIER REQUIREMENTS. ADD ENVIRONMENTALLY SAFE GREEN DYE AS A VISUAL AID DURING APPLICATION.

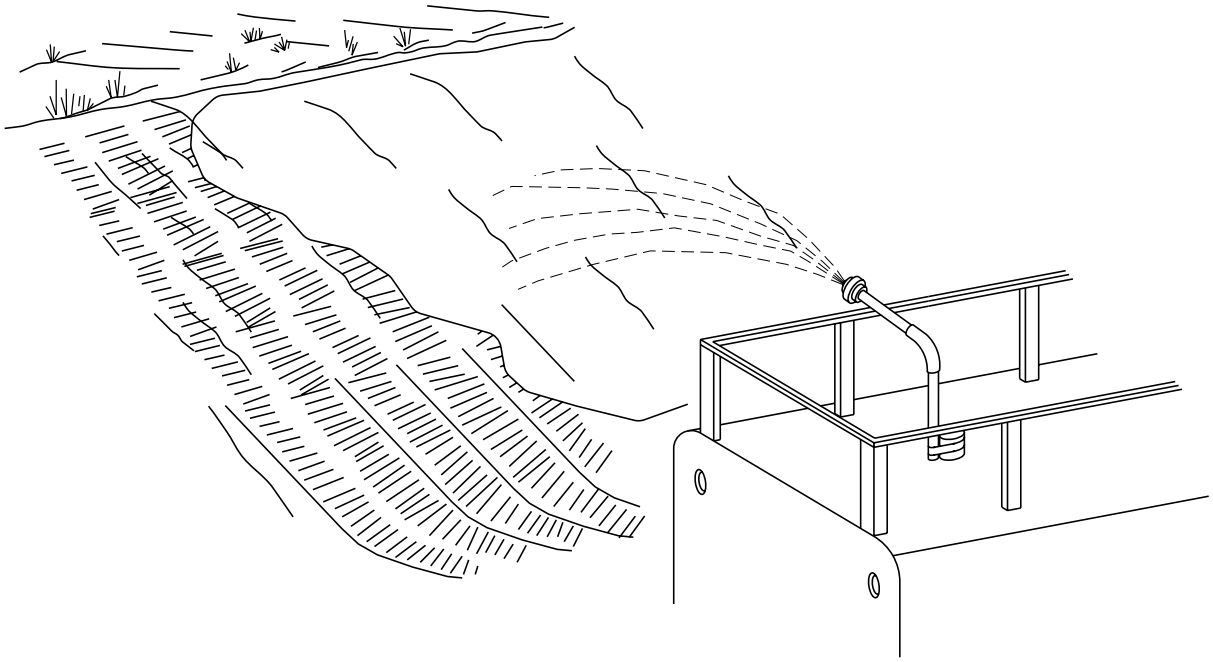

HYDRAULIC MULCH		
PRODUCT	MATERIAL	APPLICATION RATE *
PAPER-BASED HYDRAULIC MULCH	PAPER	1000 LB./ACRE [1120 kg/ha] (MIN.)
WOOD-BASED HYDRAULIC MULCH	WOOD OR WOOD & PAPER	1000 LB./ACRE [1120 kg/ha] (MIN.)

* APPLICATION RATES VARY WITH SLOPE & MUST BE APPROVED BY THE PROJECT MANAGER

UNITS SHOWN IN BRACKETS [] ARE METRIC AND ARE IN MILLIMETERS (mm) UNLESS OTHER UNITS ARE SHOWN.

DETAILED DRAWING

REFERENCE STANDARD SPEC. SECTION 208, 610

DWG. NO. 208-04

HYDRAULIC MULCH (EC-3)

EFFECTIVE: SEPTEMBER 2014

MDT MONTANA DEPARTMENT OF TRANSPORTATION

SYMBOL: ——— SB ———

SOIL BINDERS EC-5:

1. SOIL BINDERS CONSIST OF APPLYING AND MAINTAINING POLYMERIC OR LIGNIN SULFONATE SOIL STABILIZERS OR EMULSIONS. SOIL BINDERS ARE MATERIALS APPLIED TO THE SOIL SURFACE TO TEMPORARILY PREVENT WATER-INDUCED EROSION OF EXPOSED SOILS ON CONSTRUCTION SITES. SOIL BINDERS TYPICALLY ALSO PROVIDE DUST, WIND AND SOIL STABILIZATION BENEFITS. BECAUSE SOIL BINDERS CAN OFTEN BE INCORPORATED INTO THE WORK, THEY MAY BE A GOOD CHOICE FOR AREAS WHERE GRADING ACTIVITIES MAY SOON RESUME.

2. DUE TO THE TEMPORARY NATURE OF SOIL BINDERS, REAPPLICATION MAY BE REQUIRED OVER AREAS WITH PEDESTRIAN AND VEHICLE TRAFFIC.

3. SOIL BINDER TYPE AND APPLICATION PROCEDURES REQUIRE THE PROJECT MANAGER'S APPROVAL PRIOR TO PLACEMENT. APPLY PER MANUFACTURER'S SPECIFICATIONS.

4. REAPPLY SOIL BINDERS, AS SPECIFIED BY THE PROJECT MANAGER, IN HIGH TRAFFIC AREAS AND FOLLOWING RAIN EVENTS TO ENSURE AN ADEQUATELY MAINTAINED SURFACE.

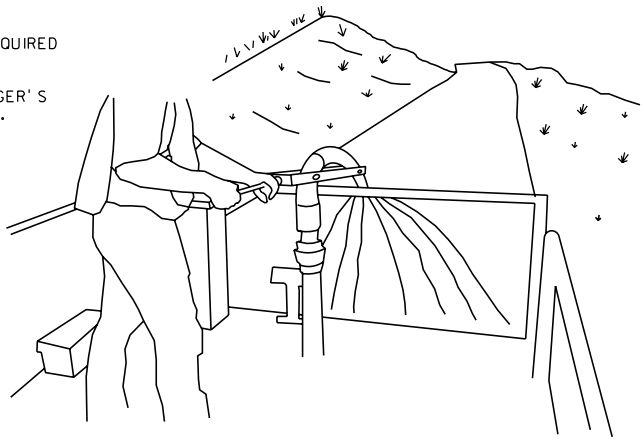

PROPERTIES OF SOIL BINDERS FOR EROSION CONTROL

CHEMICALS	COPOLYMER	LIGNIN SULFONATE	PSYLLIUM	GUAR
COMMENTS	FORMS SEMIPERMEABLE TRANSPARENT CRUST. RESISTS ULTRAVIOLET RADIATION & MOISTURE INDUCED BREAKDOWN.	PAPER INDUSTRY WASTE PRODUCT. ACTS AS DISPERSING AGENT. BEST IN DRY CLIMATES. CAN BE SLIPPERY.	EFFECTIVE ON DRY, HARD SOILS. FORMS A CRUST.	EFFECTIVE ON DRY, HARD SOILS. FORMS A CRUST.
RELATIVE COST	HIGH	MODERATE	LOW	LOW
ENVIRONMENTAL HAZARD	LOW	LOW	LOW	LOW
PENETRATION	MODERATE	MODERATE	HIGH	HIGH
EVAPORATION	MODERATE	MODERATE	MODERATE	MODERATE
LEACHING RESISTANCE	LOW	HIGH	HIGH	HIGH
ABRASION RESISTANCE	HIGH	LOW	MODERATE	MODERATE
LONGEVITY	1 TO 2 YEARS	6 MONTHS TO 1 YEAR	3 TO 6 MONTHS	3 TO 6 MONTHS
MINIMUM CURING TIME BEFORE RAIN	24 HOURS	24 HOURS	24 HOURS	24 HOURS
COMPATIBILITY WITH EXISTING VEGETATION	GOOD	POOR	POOR	POOR
MODE OF DEGRADATION	CHEMICALLY DEGRADABLE	BIOLOGICALLY/PHYSICALLY/CHEMICALLY	BIOLOGICALLY DEGRADABLE	BIOLOGICALLY DEGRADABLE
LABOR INTENSIVE	NO	NO	NO	NO
SPECIALIZED APPL. EQUIPMENT	YES	YES	YES	YES
LIQUID/POWDER	LIQUID	POWDER	POWDER	POWDER
SURFACE CRUSTING	YES	YES, BUT DISSOLVED ON REWETTING	YES, BUT DISSOLVED ON REWETTING	YES, BUT DISSOLVED ON REWETTING
CLEAN-UP	SOLVENTS	SOLVENTS	WATER	WATER
EROSION CONTROL APPLICATION RATE	APPLY 85-105 GAL./ACRE [800-1000 l/ha]	APPLY 600-700 GAL./ACRE [5600-6500 l/ha]	APPLY 150 LB./ACRE [170 kg/ha] WITH 500-2000 LB./ACRE [560-2200 kg/ha] FIBER MULCH	APPLY 100-200 LB./ACRE [110-220 kg/ha] WITH 500-2000 LB./ACRE [560-2200 kg/ha] FIBER MULCH
DUST CONTROL APPLICATION RATE	APPLY 30-55 GAL./ACRE [280-520 l/ha]	LOOSEN SURFACE 1-2 INCHES [25-50 mm]. NEED 4-8% FINES. APPLY 50-200 GAL./ACRE [470-1900 l/ha]	APPLY 150 LB./ACRE [170 kg/ha]	APPLY 40-60 LB./ACRE [45-70 kg/ha]

UNITS SHOWN IN BRACKETS [] ARE METRIC AND ARE IN MILLIMETERS (mm) UNLESS OTHER UNITS ARE SHOWN.

DETAILED DRAWING

REFERENCE STANDARD SPEC. SECTION 208

DWG. NO. 208-08

SOIL BINDERS (EC-5)

EFFECTIVE: SEPTEMBER 2014

MDT MONTANA DEPARTMENT OF TRANSPORTATION

SYMBOL: ———— SM ————

STRAW MULCH EC-6:

1. STRAW MULCH CONSISTS OF PLACING A UNIFORM LAYER OF STRAW AND ANCHORING IT INTO THE SOIL WITH A STUDDED ROLLER OR DISK OR BINDING THE STRAW TOGETHER WITH A PROJECT MANAGER APPROVED TACKIFIER.

2. USE STRAW MULCH FOR EROSION CONTROL AS A TEMPORARY SURFACE COVER ON DISTURBED AREAS UNTIL SOILS CAN BE PREPARED OR RE-VEGETATION/PERMANENT VEGETATION IS ESTABLISHED. STRAW MULCH IS COMMONLY USED IN COMBINATION WITH TEMPORARY SEEDING, EROSION SEEDING, AND/OR PERMANENT SEEDING TO ENHANCE PLANT ESTABLISHMENT.

3. ALL STRAW MULCH IS REQUIRED TO BE CERTIFIED WEED FREE AND DERIVED FROM WHEAT, BARLEY OR RICE. PROJECT MANAGER'S APPROVAL IS REQUIRED PRIOR TO ANY PLACEMENT OF STRAW MULCH.

4. APPLY STRAW MULCH UNDER LOW WIND CONDITIONS. OBTAIN PROJECT MANAGER'S APPROVAL FOR PLACEMENT METHODS PRIOR TO PLACEMENT. EVENLY DISTRIBUTE STRAW MULCH AT A MINIMUM LOOSE RATE OF 4000 LB./ACRE [4 490 kg/ha]. IMMEDIATELY FOLLOWING PLACEMENT, CRIMP OR APPLY TACKIFIERS TO RETAIN MULCH. CRIMP USING DISKS OR A PUNCH-TYPE ROLLER. IF TACKIFIERS ARE USED, FOLLOW GUIDELINES PROVIDED IN BMP EC-5. WHEN EITHER TEMPORARY OR PERMANENT SEEDING IS COMBINED WITH THE STRAW MULCH BMP, COMPLETE SEEDING OPERATIONS PRIOR TO STRAW MULCH PLACEMENT.

5. REAPPLICATION OF STRAW MULCH AND TACKIFIER MAY BE REQUIRED BY THE PROJECT MANAGER TO MAINTAIN EFFECTIVE EROSION CONTROL OVER DISTURBED AREAS AND SLOPES.

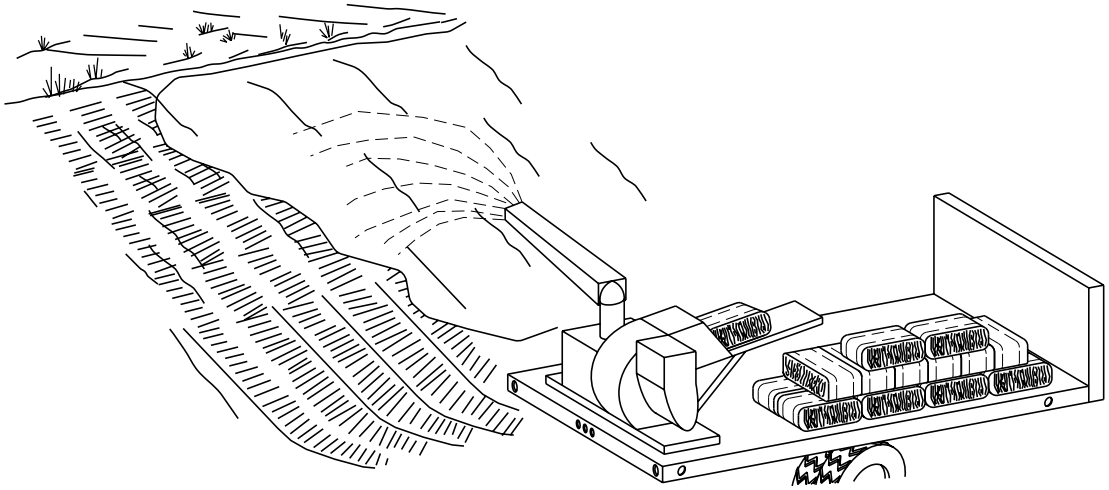

STRAW BLOWER

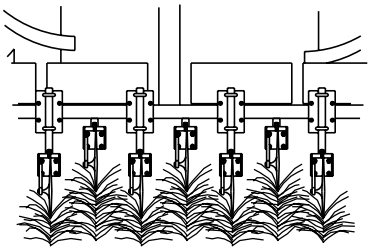

STRAW CRIMPING

UNITS SHOWN IN BRACKETS [] ARE METRIC AND ARE IN MILLIMETERS (mm) UNLESS OTHER UNITS ARE SHOWN.

DETAILED DRAWING	
REFERENCE STANDARD SPEC. SECTION 208	DWG. NO. 208-10
STRAW MULCH (EC-6)	
EFFECTIVE: SEPTEMBER 2014	
MDT MONTANA DEPARTMENT OF TRANSPORTATION	

SYMBOL: ——— EC ———

ROLLED EROSION CONTROL PRODUCTS EC-7:

1. ROLLED EROSION CONTROL PRODUCTS INCLUDE EROSION CONTROL BLANKETS AND MATS, PLASTIC COVERS, AND PERMANENT EROSION CONTROL GEOTEXTILES AND ARE USED TO STABILIZE DISTURBED SOIL AREAS AND PROTECT SOILS FROM EROSION BY WIND AND WATER. THESE PRODUCTS CAN BE USED ON STEEP SLOPES, SLOPES WITH HIGH EROSION HAZARDS, SLOPES WHERE MULCHES CAN NOT BE ANCHORED, UNPROTECTED CHANNELS AND HIGH FLOW CHANNELS.

2. INSTALL EROSION CONTROL BLANKETS AND MATS IN ACCORDANCE WITH MANUFACTURER'S SPECIFICATIONS AND SECTION 610.

3. INSTALL PERMANENT EROSION CONTROL GEOTEXTILE AND TURF REINFORCEMENT MATS IN ACCORDANCE WITH MANUFACTURER'S SPECIFICATIONS AND SECTION 622.

4. LIMIT USE OF PLASTIC COVERS TO COVERING STOCKPILES OR VERY SMALL GRADED AREAS FOR SHORT PERIODS OF TIME, SUCH AS THROUGH ONE IMMINENT STORM EVENT, UNTIL ALTERNATIVE MEASURES MAY BE INSTALLED. PLASTIC COVERS ARE REQUIRED TO BE POLYETHYLENE SHEETING HAVING A MINIMUM THICKNESS OF 6 mil[0.15 mm]. ANCHOR PLASTIC COVERS WITH SANDBAGS PLACED NO MORE THAN 10 FT [3 m]APART AND BY KEYING INTO THE TOP OF SLOPE TO PREVENT INFILTRATION OF SURFACE WATERS UNDER THE PLASTIC. TAPE OR WEIGHT DOWN THE ENTIRE LENGTH OF ALL SEAMS WITH AT LEAST A 1 FT TO 2 FT [300 mm TO 600 mm]OVERLAP.

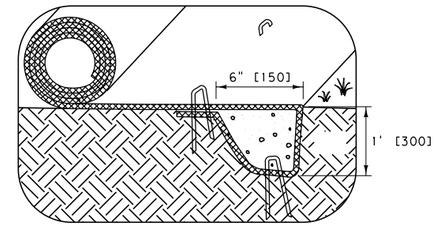

INITIAL CHANNEL ANCHOR TRENCH

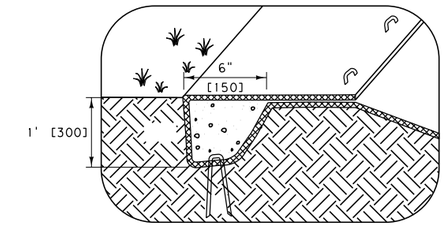

TERMINAL SLOPE & CHANNEL ANCHOR TRENCH

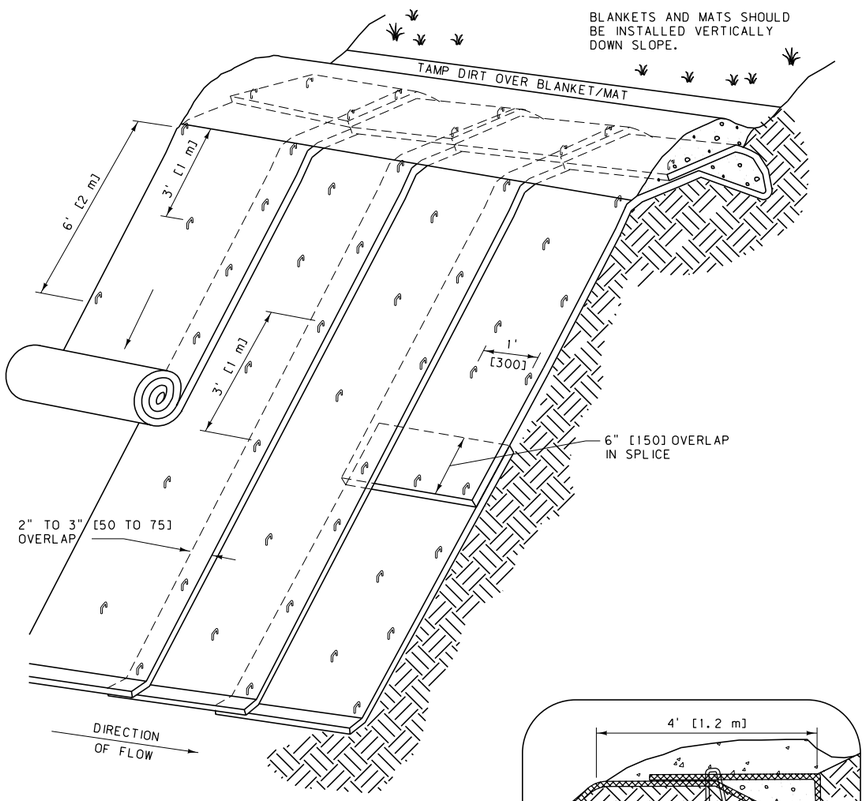

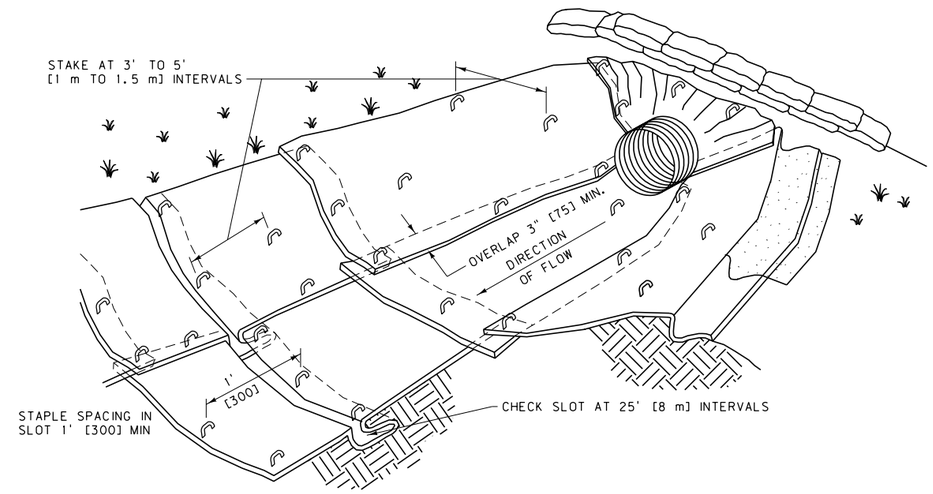

TYPICAL CHANNEL DETAIL - ISOMETRIC VIEW

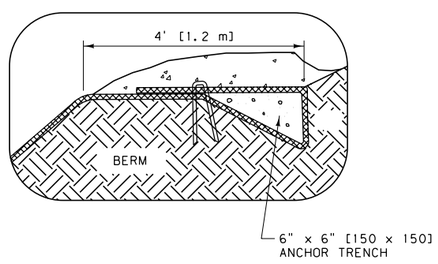

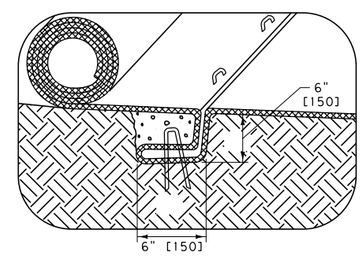

INTERMITTENT CHECK SLOT

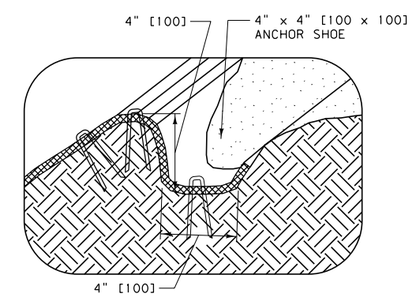

LONGITUDINAL ANCHOR TRENCH

UNITS SHOWN IN BRACKETS [] ARE METRIC AND ARE IN MILLIMETERS (mm) UNLESS OTHER UNITS ARE SHOWN.

DETAILED DRAWING	
REFERENCE STANDARD SPEC. SECTION 208, 610, 622	DWG. NO. 208-12
ROLLED EROSION CONTROL PRODUCTS (EC-7)	
EFFECTIVE: SEPTEMBER 2014	

MDT MONTANA DEPARTMENT OF TRANSPORTATION

SYMBOL: ——— ED ———

EARTH DIKES, DRAINAGE SWALES, & LINED DITCHES EC-9:

1. EARTH DIKES, DRAINAGE SWALES, AND LINED DITCHES ARE STRUCTURES THAT INTERCEPT, DIVERT, AND CONVEY SURFACE RUN-ON, GENERALLY SHEET FLOW, TO PREVENT EROSION. THESE DEVICES MAY BE IMPLEMENTED ON A PROJECT-BY-PROJECT BASIS WITH OTHER BMPs WHEN NECESSARY AND FEASIBLE. DIKES, SWALES, AND DITCHES ARE CONVEYANCE MEASURES AND ARE NOT INTENDED TO TRAP SEDIMENT. SEDIMENT CONTROL BMPs CAN BE USED IN CONJUNCTION WITH THESE CONVEYANCE DEVICES.

2. WHEN POSSIBLE, INSTALL AND UTILIZE DIKES, SWALES, AND DITCHES EARLY IN THE CONSTRUCTION PHASE. CONSTRUCT SWALES ALONG THE TOP AND BOTTOM OF CUT AND FILL SLOPES, AS SPECIFIED IN THE PLANS OR AS DESIGNATED BY THE PROJECT MANAGER. "V" BOTTOM DITCHES CAN BE USED FOR SWALE CONSTRUCTION FOLLOWING PROJECT MANAGER'S APPROVAL. USE SEDIMENT CONTROL DEVICES FOR RUNOFF THAT IS DIVERTED FROM DISTURBED AREAS. CONVEY FLOWS FROM UNDISTURBED AREAS INTO A STABILIZED AREA AT NON-EROSIVE VELOCITIES.

3. USE LINED DITCHES FOR AREAS OF EROSIVE FLOW VELOCITIES FOLLOWING THE GUIDELINES FOR ROLLED EROSION CONTROL PRODUCTS AND/OR SLOPE DRAINS. SEED ALL UNLINED PORTIONS OF DITCHES, DIKES, AND SWALES THAT WILL BE IN USE FOR MORE THAN 14 DAYS PER SECTION 208.

4. INSPECT DIKES, SWALES, AND DITCHES AFTER RAINFALL EVENTS. REMOVE DEBRIS AND SEDIMENT, AND REPAIR LININGS AND EMBANKMENTS AS NEEDED OR AS SPECIFIED BY THE PROJECT MANAGER.

5. REMOVE ALL DIKES, SWALES, AND DITCHES FROM THE CLEAR ZONES EXPEDIENTLY UPON COMPLETION OF CONSTRUCTION ACTIVITIES.

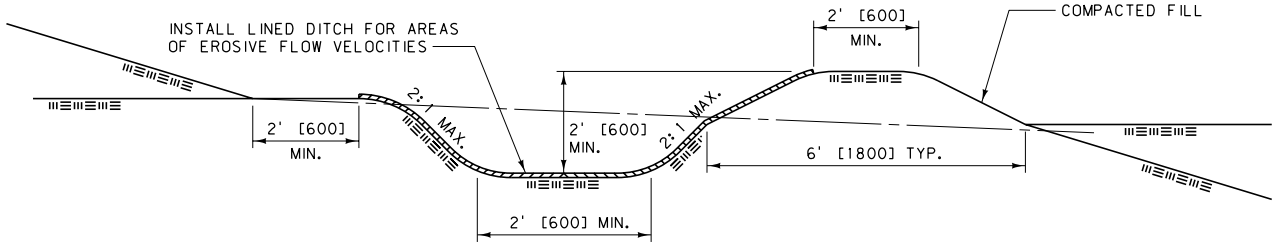

TYPICAL DRAINAGE SWALE

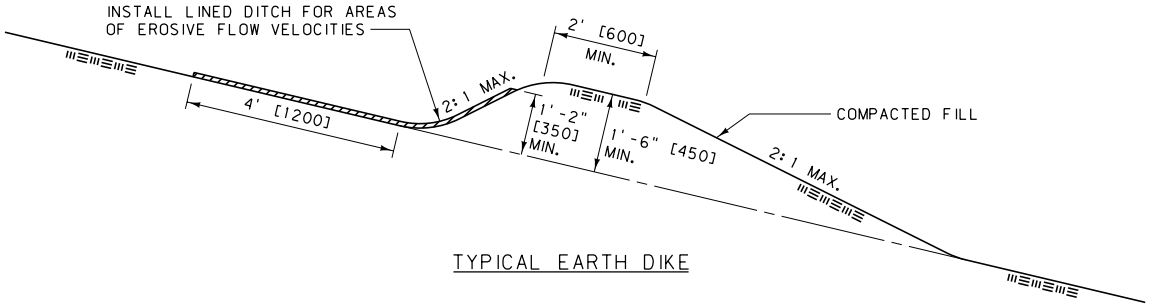

TYPICAL EARTH DIKE

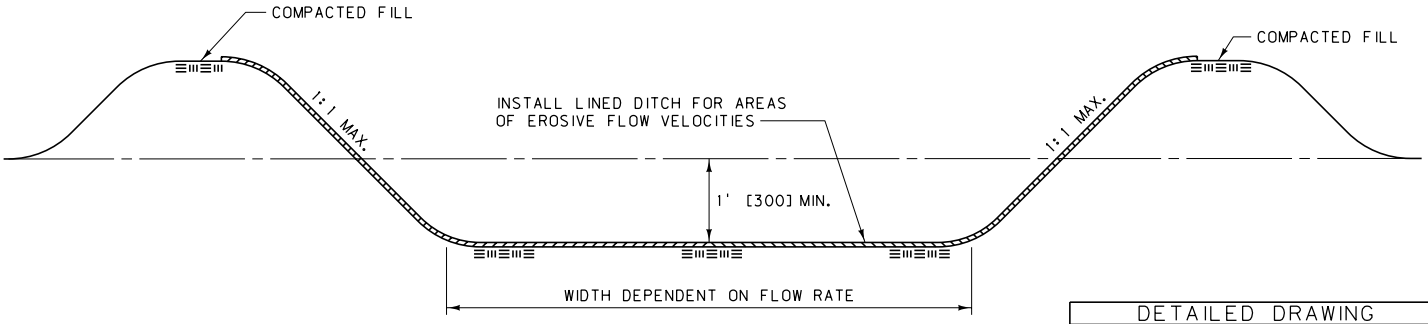

TYPICAL TRAPEZOIDAL DITCH

UNITS SHOWN IN BRACKETS [] ARE METRIC AND ARE IN MILLIMETERS (mm) UNLESS OTHER UNITS ARE SHOWN.

DETAILED DRAWING	
REFERENCE STANDARD SPEC. SECTION 208	DWG. NO. 208-16
EARTH DIKES, DRAINAGE SWALES, & LINED DITCHES (EC-9)	
EFFECTIVE: SEPTEMBER 2014	
MDT MONTANA DEPARTMENT OF TRANSPORTATION	

SYMBOL: (OP)

TEMPORARY OUTLET PROTECTION AND VELOCITY DISSIPATION DEVICES EC-10:

1. OUTLET PROTECTION AND VELOCITY DISSIPATION DEVICES ARE PLACED AT PIPE OUTLETS TO PREVENT SCOUR AND REDUCE THE VELOCITY AND/OR ENERGY OF EXITING STORM WATER FLOWS. THESE DEVICES CAN BE USED AT THE OUTLETS OF PIPES, DRAINS, CULVERTS, SLOPE DRAINS, DIVERSION DITCHES, SWALES, CONDUITS OR CHANNELS AND SHOULD BE IMPLEMENTED ON A PROJECT-BY-PROJECT BASIS WITH OTHER BMPs WHEN DETERMINED NECESSARY BY THE PROJECT MANAGER.

2. FOLLOW GUIDELINES BELOW FOR SIZING OUTLET PROTECTION AND VELOCITY DISSIPATION DEVICES. FOLLOWING THE PROJECT MANAGER'S APPROVAL, OTHER MATERIALS MAY BE SUBSTITUTED FOR RIPRAP. PERMANENT EROSION CONTROL GEOTEXTILE PLACEMENT MAY BE ELIMINATED FOLLOWING THE PROJECT MANAGER'S APPROVAL. PLACE TYPE 1 OR TYPE 2 BANK PROTECTION AT PIPE OUTLET. FOR PIPE DIAMETERS LARGER THAN 24" [600] AND/OR HIGH FLOWS, THE APPLICATION IS NOT CONSIDERED TEMPORARY AND A MONTANA REGISTERED ENGINEER'S DESIGN IS REQUIRED.

3. INSTALL PERMANENT EROSION CONTROL GEOTEXTILE IN ACCORDANCE WITH MANUFACTURER'S SPECIFICATIONS AND SECTION 622.

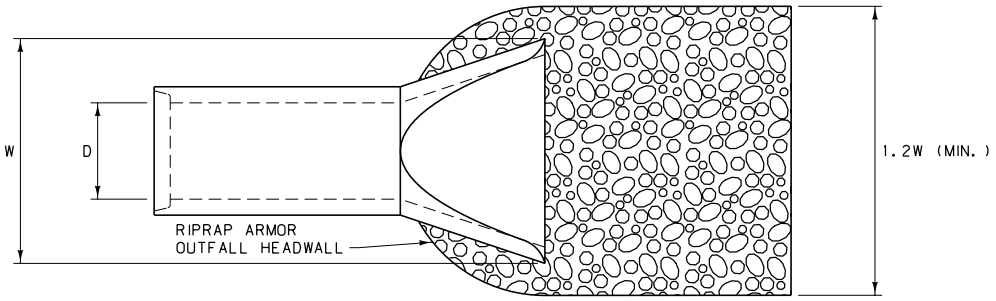

PLAN VIEW - CHANNELIZED FLOW

(OUTFALL TO CHANNEL OR DITCH)

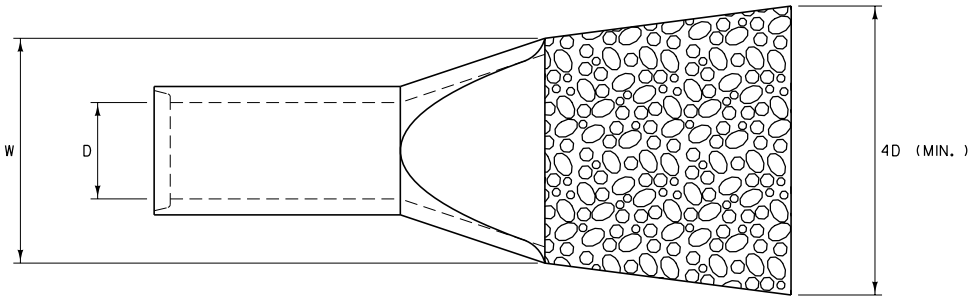

PLAN VIEW - UNCHANNELIZED FLOW

(OUTFALL TO UNCONFINED SURFACE-OVERLAND FLOW)

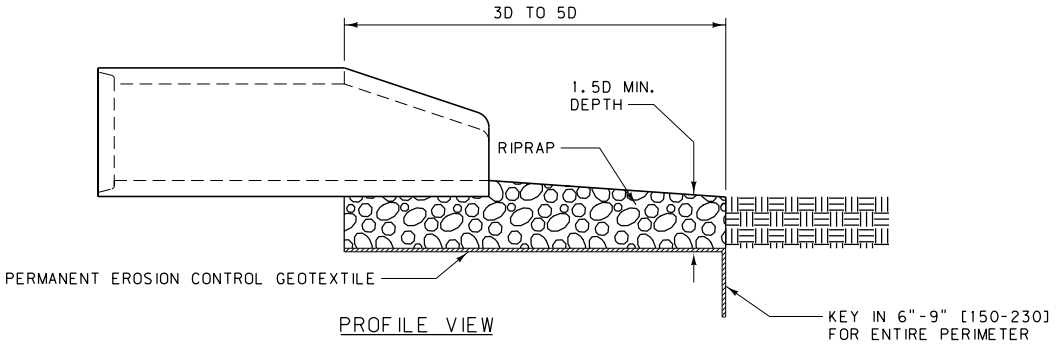

PROFILE VIEW

UNITS SHOWN IN BRACKETS [] ARE METRIC AND ARE IN MILLIMETERS (mm) UNLESS OTHER UNITS ARE SHOWN.

DETAILED DRAWING	
REFERENCE STANDARD SPEC. SECTION 208, 622	DWG. NO. 208-18
TEMPORARY OUTLET AND VELOCITY DISSIPATION DEVICES (EC-10)	
EFFECTIVE: SEPTEMBER 2014	
MDT MONTANA DEPARTMENT OF TRANSPORTATION	

SYMBOL: ——— TSD ———

TEMPORARY SLOPE DRAINS EC-11:

① A TEMPORARY SLOPE DRAIN IS A PIPE OR LINED CHANNEL USED TO INTERCEPT AND CONVEY SURFACE RUNOFF OR GROUNDWATER INTO A STABILIZED WATERCOURSE, TRAPPING DEVICE, OR STABILIZED AREA. THIS DEVICE MAY BE USED AT CONSTRUCTION SITES WHERE SLOPES MAY BE ERODED BY SURFACE RUNOFF.

② DO NOT EXCEED A DRAINAGE AREA OF 10 ACRES [4 ha] PER SLOPE DRAIN PIPE. FOR AREAS LARGER THAN 10 ACRES [4 ha] USE ROCK LINED CHANNELS. INCORPORATE EARTH DIKES, DRAINAGE SWALES, AND LINED DITCHES TO AID IN FLOW DIVERSION.

③ INSTALL SLOPE DRAINS AS FOLLOWS:
- INSTALL DRAINS PERPENDICULAR TO SLOPE
- COMPACT SOIL AROUND INLET, OUTLET, AND LENGTH OF STRUCTURE
- SECURELY ANCHOR SLOPE DRAINS INTO SOIL
- ENSURE CONNECTIONS ARE WATER TIGHT
- PROTECT INLET AND OUTLET WITH OUTLET PROTECTION AND VELOCITY DISSIPATION DEVICES

④ INSTALL PERMANENT EROSION CONTROL GEOTEXTILE UNDER RIPRAP.

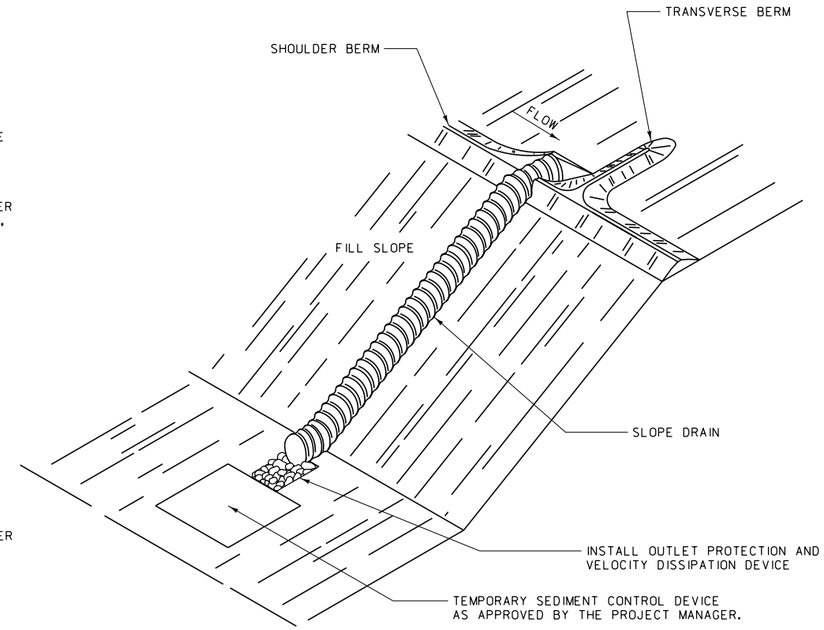

TURF REINFORCEMENT MAT DRAINAGE CHUTE

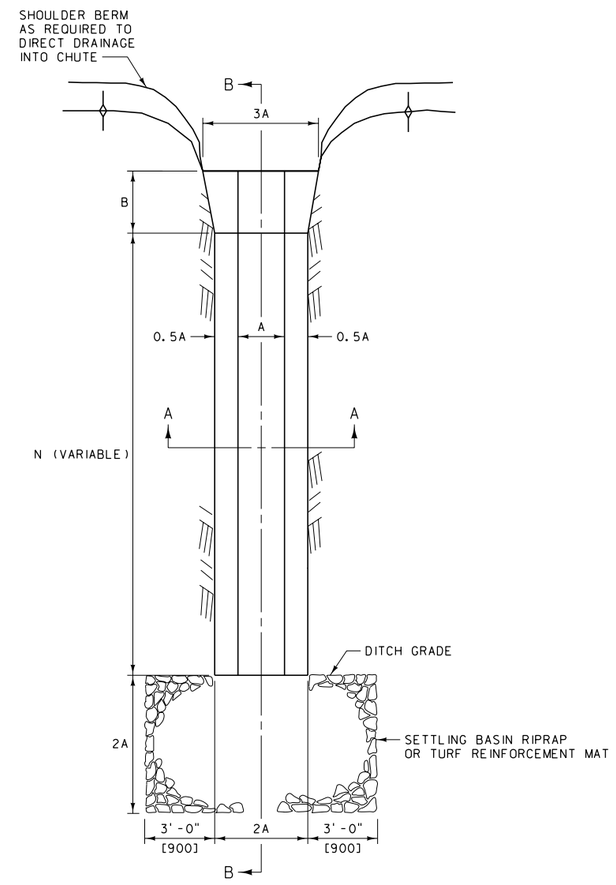

PLAN VIEW

SEE DTL. DWG. 613-18 FOR VARIABLE DIMENSIONS SHOWN ABOVE AND SHOWN IN SECTIONS A-A AND B-B.

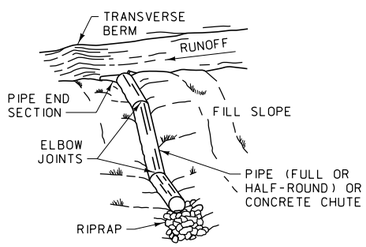

PIPE SLOPE DRAIN

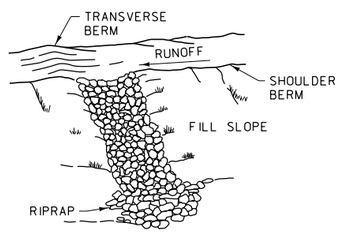

RIPRAP SLOPE DRAIN

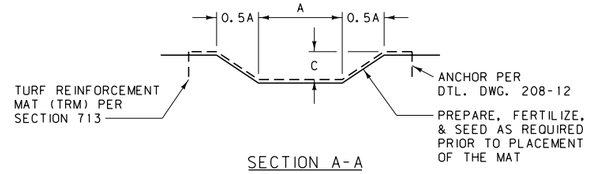

SECTION A-A

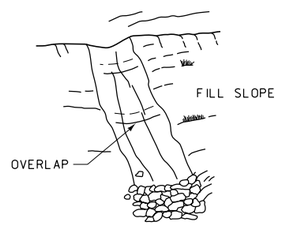

DITCH LINER: ROLLED EROSION CONTROL PRODUCT

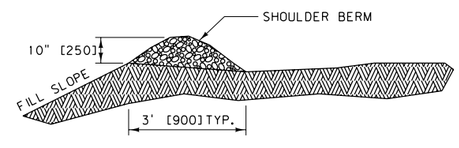

SHOULDER BERM SECTION

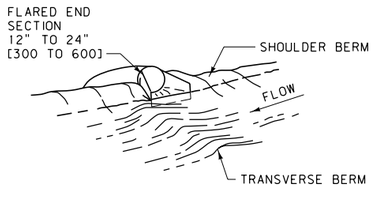

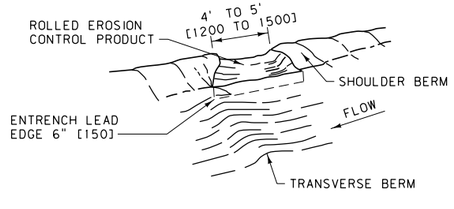

SLOPE DRAIN INLETS

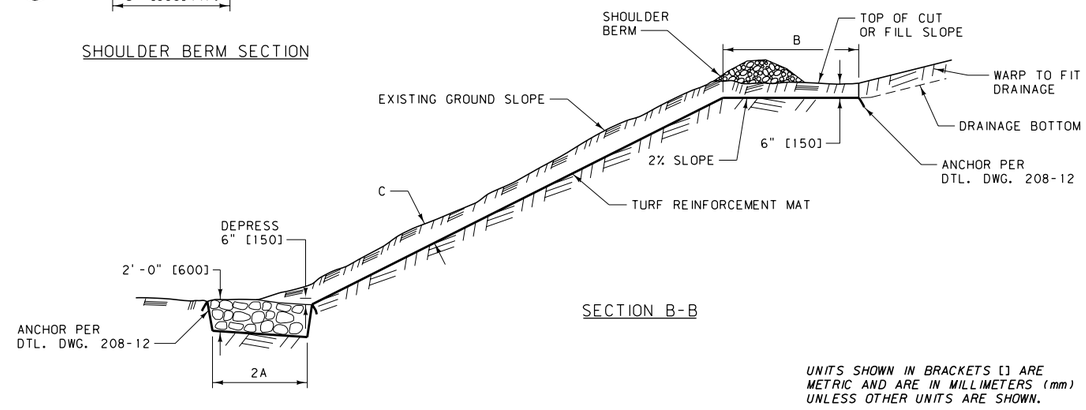

SECTION B-B

UNITS SHOWN IN BRACKETS [] ARE METRIC AND ARE IN MILLIMETERS (mm) UNLESS OTHER UNITS ARE SHOWN.

DETAILED DRAWING	
REFERENCE STANDARD SPEC. SECTION 208, 713	DWG. NO. 208-20
TEMPORARY SLOPE DRAINS (EC-11)	
EFFECTIVE: SEPTEMBER 2014	

MDT MONTANA DEPARTMENT OF TRANSPORTATION

SYMBOL: ———— SR ————

SLOPE ROUGHENING EC-12:

1. SLOPE ROUGHENING IS A VERY ROUGH SOIL SURFACE ON SLOPES RESULTING FROM CONSTRUCTION ACTIVITIES OR THE SYSTEMATIC ROUGHENING USING HEAVY EQUIPMENT TO CREATE RIDGES OR FURROWS PERPENDICULAR TO THE SLOPE. THE RIDGES OR FURROWS ARE TO BE EQUAL TO OR GREATER THAN 2" [50] IN HEIGHT AND NO FURTHER THAN TWICE THE HEIGHT OF THE RIDGE OR FURROW APART.

2. ALL SLOPES STEEPER THAN 3:1 AND GREATER THAN 5 [1500] VERTICAL FEET REQUIRE SLOPE ROUGHENING, EXCLUDING ROCK SLOPES THAT CANNOT BE EXCAVATED BY RIPPING. ROUGHEN DISTURBED SLOPES OR LEAVE IN A ROUGHENED CONDITION. APPROPRIATE SUPPLEMENTS INCLUDE EROSION CONTROL BMPs SUCH AS TEMPORARY SEEDING OR EROSION SEEDING.

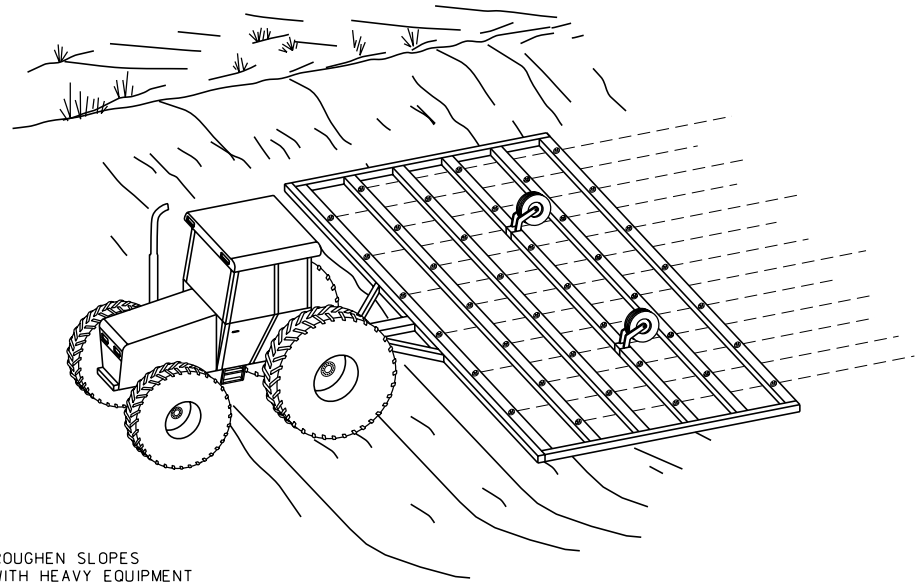

ROUGHEN SLOPES
WITH HEAVY EQUIPMENT
OR LEAVE IN ROUGHENED
CONDITION

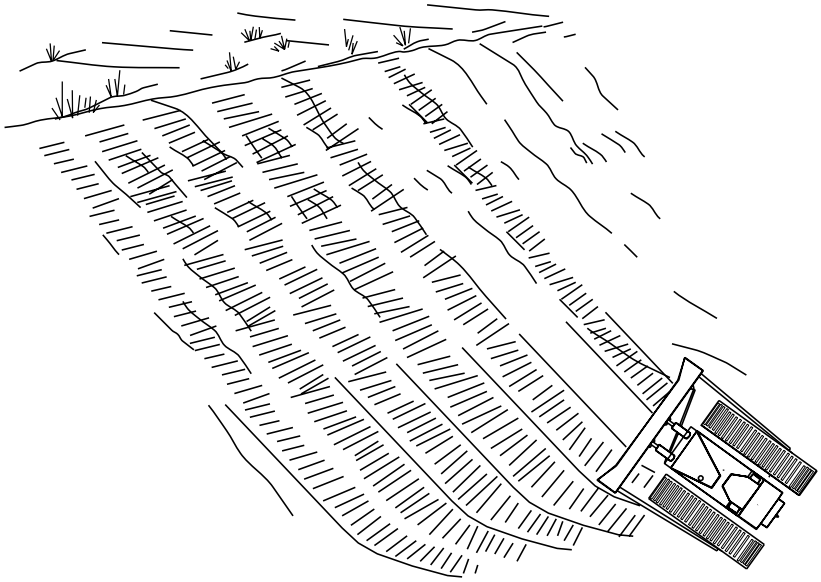

UNITS SHOWN IN BRACKETS [] ARE METRIC AND ARE IN MILLIMETERS (mm) UNLESS OTHER UNITS ARE SHOWN.

DETAILED DRAWING	
REFERENCE STANDARD SPEC. SECTION 208	DWG. NO. 208-22
SLOPE ROUGHENING (EC-12)	
EFFECTIVE: SEPTEMBER 2014	
MDT MONTANA DEPARTMENT OF TRANSPORTATION	

SYMBOL: ———— VBS ————

VEGETATED BUFFER EC-14:

① VEGETATED BUFFER IS AN UNDISTURBED AREA OR STRIP OF ESTABLISHED VEGETATION PRESERVED FOR EROSION AND SEDIMENT CONTROL. A VEGETATED BUFFER PROVIDES A LIVING SEDIMENT FILTER TO REDUCE RUNOFF VELOCITIES AND ALLOW CAPTURE AND SETTLING OF COARSE-GRAINED SEDIMENT. VEGETATED BUFFERS REDUCE OR PREVENT SEDIMENTATION FROM LEAVING THE RIGHT-OF-WAY.

② IDENTIFY EXISTING VEGETATED BUFFERS BEFORE CONSTRUCTION OCCURS AND MARK THEIR BOUNDARIES. KEEP EQUIPMENT AND FILL MATERIAL OFF OF VEGETATED BUFFERS. ALWAYS CONSIDER VEGETATED BUFFER ZONES WHEN WATER RESOURCES ARE ADJACENT TO OR NEAR DISTURBANCES AND REQUIRE PROTECTION. THE MINIMUM WIDTH REQUIREMENT FOR A WELL-ESTABLISHED VEGETATED BUFFER WITH A SLOPE OF 3:1 OR FLATTER IS 50 FT. [15 m]. THE MINIMUM WIDTH REQUIREMENT FOR A WELL-ESTABLISHED VEGETATED BUFFER WITH A SLOPE STEEPER THAN 3:1 IS 100 FT. [30 m]. THE WIDTH OF THE VEGETATED BUFFER MAY BE ADJUSTED ON A PROJECT-BY-PROJECT BASIS WITH APPROVAL BY THE PROJECT MANAGER. APPROPRIATE SUPPLEMENTS INCLUDE CHECK DAMS, SILT FENCES AND OTHER SEDIMENT CONTROL DEVICES.

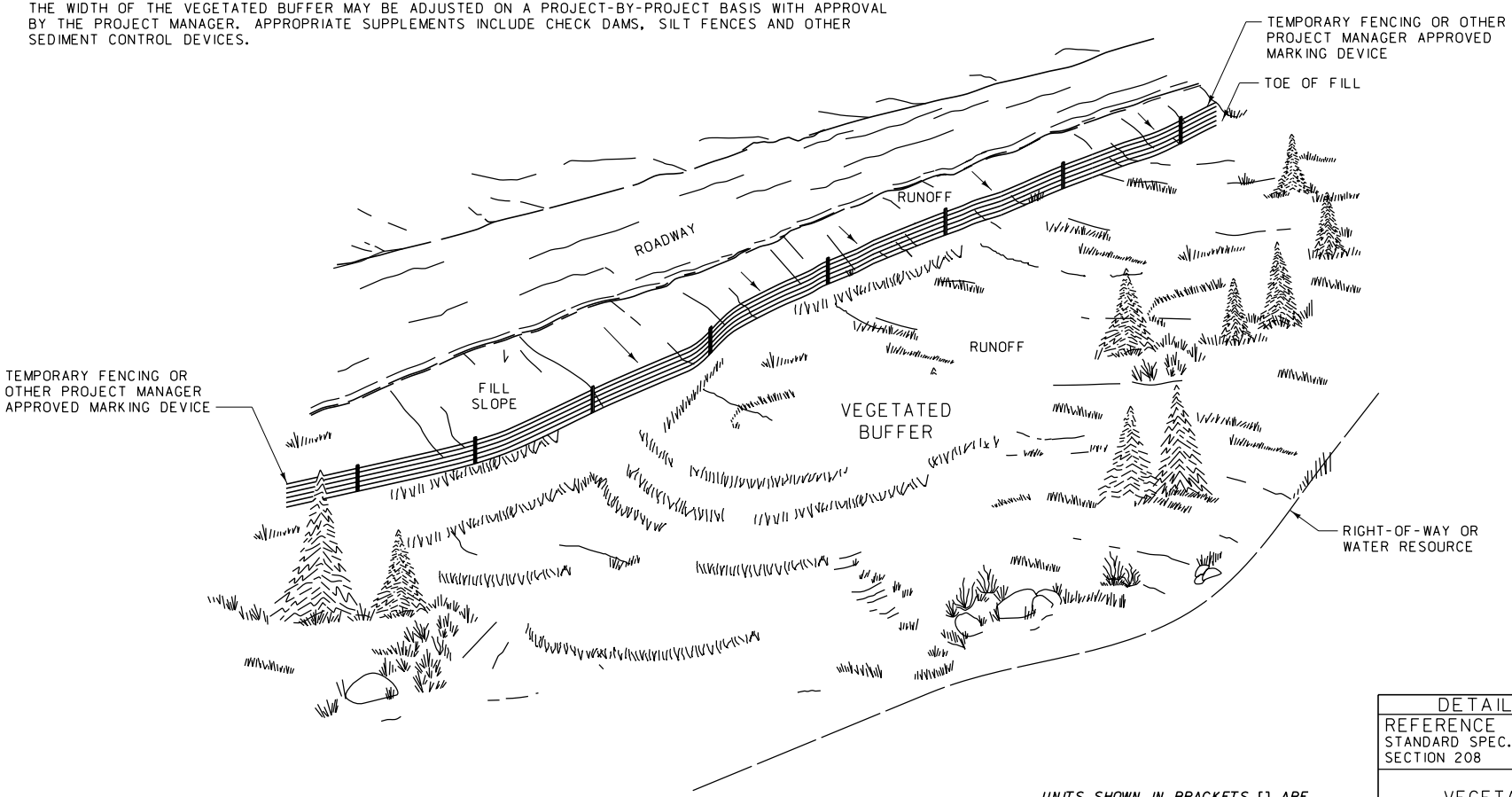

UNITS SHOWN IN BRACKETS [] ARE METRIC AND ARE IN MILLIMETERS (mm) UNLESS OTHER UNITS ARE SHOWN.

DETAILED DRAWING	
REFERENCE STANDARD SPEC. SECTION 208	DWG. NO. 208-26
VEGETATED BUFFER (EC-14)	
EFFECTIVE: SEPTEMBER 2014	

MDT MONTANA DEPARTMENT OF TRANSPORTATION

SYMBOL: ——— SF ———

SILT FENCE SC-1:

① SILT FENCE IS A SINGLE OR SERIES OF FILTER FABRIC SEDIMENT BARRIER STRETCHED AND ATTACHED TO SUPPORTING POSTS. THE FENCE BOTTOM IS ENTRENCHED.

② SILT FENCES ARE USED FOR SHEET FLOWS TO ASSIST IN SEDIMENT CONTROL BY RETAINING SOME OF THE ERODED SOIL PARTICLES AND SLOWING THE RUNOFF VELOCITY TO ALLOW PARTICLE SETTLING. INSTALL SILT FENCES IN ACCORDANCE WITH SECTION 622.

③ THERE ARE TWO TYPES OF SILT FENCE INSTALLATIONS:
- UNSTABILIZED - SILT FENCE SUPPORTED WITH EITHER WOOD OR METAL FENCE POSTS.
- STABILIZED - SILT FENCE SUPPORTED WITH METAL POSTS AND WITH WOVEN WIRE BACKING.

④ ENTRENCHMENT - THE INITIAL SILT FENCE INSTALLATION REQUIRES ONLY THE VERTICAL ENTRENCHMENT COMPONENT UNLESS THE PROJECT MANAGER DETERMINES BOTH VERTICAL AND HORIZONTAL ENTRENCHMENT COMPONENTS ARE NECESSARY. IF THE FENCE REQUIRES REPLACEMENT DUE TO FAILURE FROM PULLOUT OR UNDERCUTTING, THE SUBSEQUENT INSTALLATION WILL INCLUDE BOTH VERTICAL AND HORIZONTAL ENTRENCHMENT COMPONENTS.

⑤ USE SILT FENCES BETWEEN THE EDGE OF CONSTRUCTION DISTURBANCE AND A WATER RESOURCE, AND AT A CRITICAL RESOURCE OR RIGHT-OF-WAY LINE THAT IS ADJACENT TO CONSTRUCTION ACTIVITY. POSITION THE BARRIER TO PREVENT SEDIMENT FROM ENTERING DRAINAGES. DO NOT PLACE THE BARRIER ACROSS LIVE STREAMS OR WHERE CONCENTRATED FLOWS MAY OCCUR. WOVEN WIRE BACKING IS NECESSARY WHEN DEALING WITH HEAVIER FLOW VELOCITIES AND SEDIMENT OR AS A ROCK BARRIER. REMOVE SEDIMENT FROM BEHIND THE FENCE WHEN IT ACCUMULATES TO ONE-THIRD THE ORIGINAL HEIGHT. EITHER GRADE AND SEED OR REMOVE THE SEDIMENT DEPOSITS PRIOR TO REMOVAL OF THE FENCE. DISTANCES BETWEEN SILT FENCE WHEN USED FOR SEDIMENT RETENTION ARE AS FOLLOWS:
- FROM 2% TO 3% PLACE SILT FENCE AT 500 FT. [150 m]SPACING
- FROM 3% TO 4% PLACE SILT FENCE AT 300 FT. [90 m]SPACING
- FROM 4% + PLACE SILT FENCE AT 150 FT. [45 m]SPACING

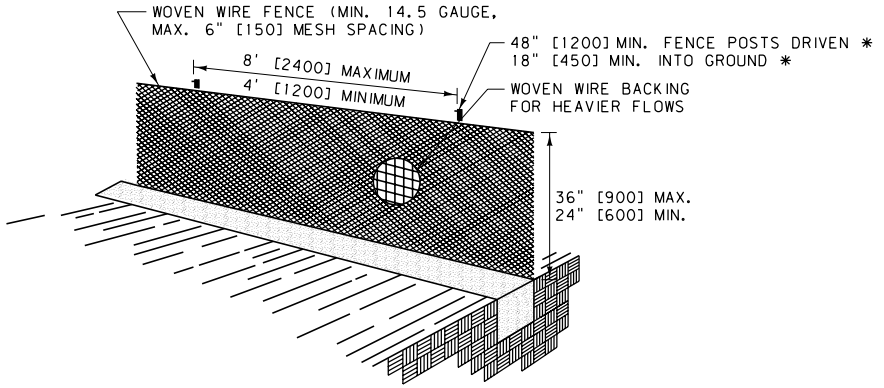

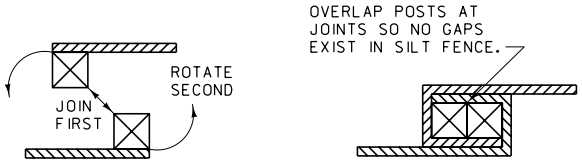

SILT FENCE JOINTS

JOIN POSTS AS SHOWN, ROTATE 180° IN DIRECTION SHOWN AND DRIVE INTO THE GROUND.

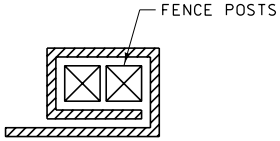

END STAKE DETAIL

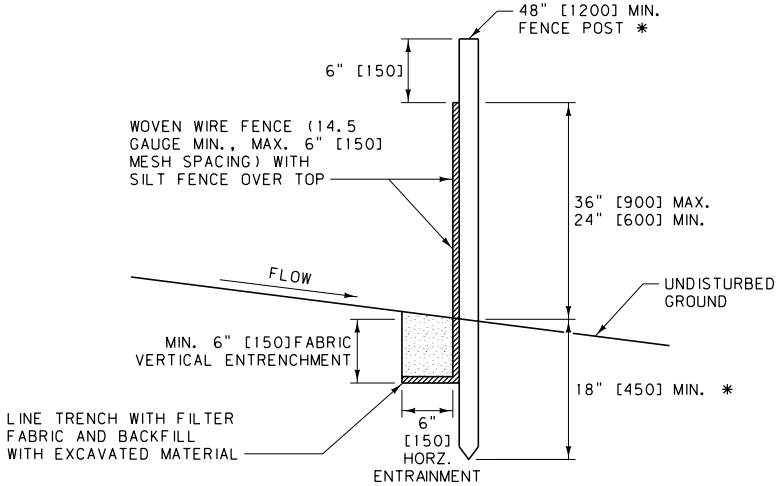

SILT FENCE - CROSS SECTION

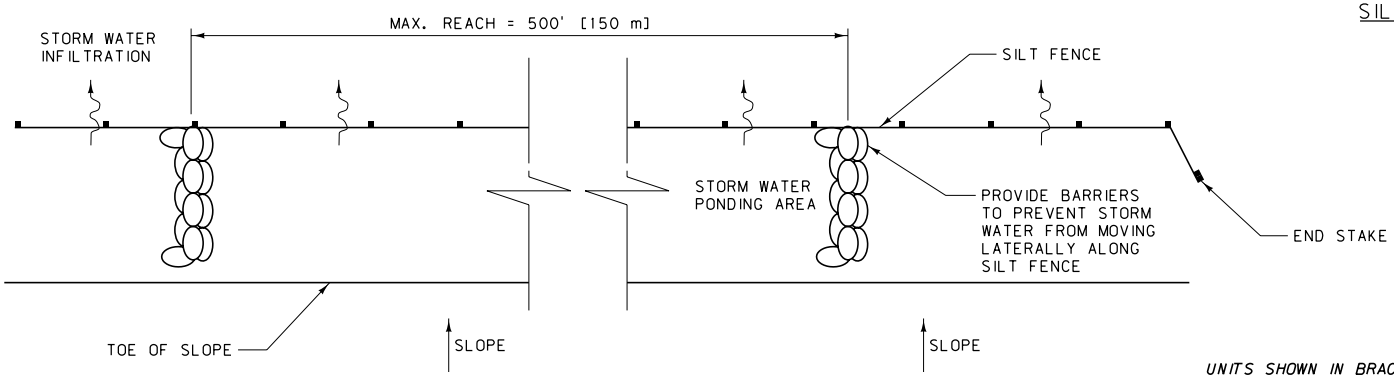

SILT FENCE - PLAN VIEW

* FOR CLEAR ZONE APPLICATIONS USE MAX. POST LENGTH OF 60" [1500] WITH A MAX. BURIAL DEPTH OF 18" [450].

UNITS SHOWN IN BRACKETS [] ARE METRIC AND ARE IN MILLIMETERS (mm) UNLESS OTHER UNITS ARE SHOWN.

DETAILED DRAWING	
REFERENCE STANDARD SPEC. SECTION 208, 622	DWG. NO. 208-30
SILT FENCE (SC-1)	
EFFECTIVE: SEPTEMBER 2014	

MDT MONTANA DEPARTMENT OF TRANSPORTATION

SYMBOL: ——— DB ———

DESILTING BASIN SC-2:

1. A DESILTING BASIN IS A TEMPORARY BASIN FORMED BY EXCAVATION AND/OR CONSTRUCTING AN EMBANKMENT SO THAT SEDIMENT-LADEN RUNOFF IS TEMPORARILY DETAINED UNDER SLOW FLOWING CONDITIONS, ALLOWING SEDIMENT TO SETTLE OUT BEFORE THE RUNOFF IS DISCHARGED.

2. USE DESILTING BASINS FOR DISTURBED AREAS BETWEEN 5 ACRES [2 ha] AND 10 ACRES [4 ha] WHERE SEDIMENT-LADEN WATER MAY ENTER THE DRAINAGE SYSTEM OR WATERCOURSE.

3. DO NOT USE DESILTING BASINS FOR DRAINAGE AREAS GREATER THAN 75 ACRES [30 ha] AND DO NOT LOCATE BASINS WITHIN LIVE STREAMS.

4. SIZE DESILTING BASINS SUCH THAT THERE IS 50 C.Y. PER ACRE [100 m^3 PER 1 ha] OF CONTRIBUTING AREA, LENGTH MUST BE EQUAL OR LARGER THAN TWICE THE WIDTH, DEPTH MUST BE BETWEEN 3 FT. AND 5 FT. [1 m AND 1.5 m]. ANY BASIN MEETING THE DEFINITION OF A "HIGH HAZARD DAM" MUST BE DESIGNED BY A PROFESSIONAL CIVIL ENGINEER REGISTERED IN THE STATE OF MONTANA. BASINS LARGER THAN 1300 C.Y. [1000 m^3] MUST ALSO BE DESIGNED BY A PROFESSIONAL CIVIL ENGINEER REGISTERED IN THE STATE OF MONTANA.

5. PLACE ROCK, VEGETATION, OR PERMANENT EROSION CONTROL GEOTEXTILE TO PROTECT THE BASIN INLET AND SLOPES AGAINST EROSION. SURROUND DESILTING BASINS WITH CHAIN LINK FENCE WHEN DESIGNED IN RESIDENTIAL/COMMERCIAL AREAS OR AS DIRECTED BY THE PROJECT MANAGER.

6. INSTALL PERMANENT EROSION CONTROL GEOTEXTILE IN ACCORDANCE WITH MANUFACTURER'S SPECIFICATIONS AND SECTION 622.

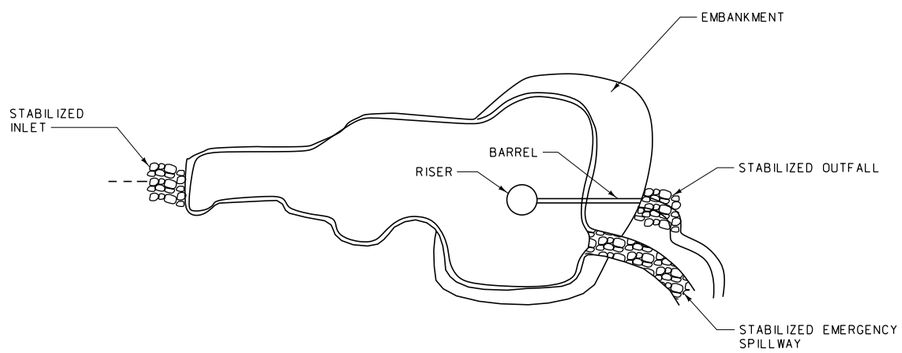

TYPICAL DESILTING BASIN - TOP VIEW

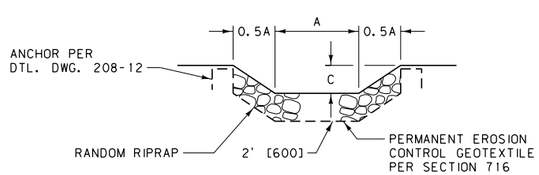

SECTION A-A

RIPRAP CHUTE: SEE DTL. DWG. 613-18 FOR VARIABLE DIMENSIONS SHOWN ABOVE.

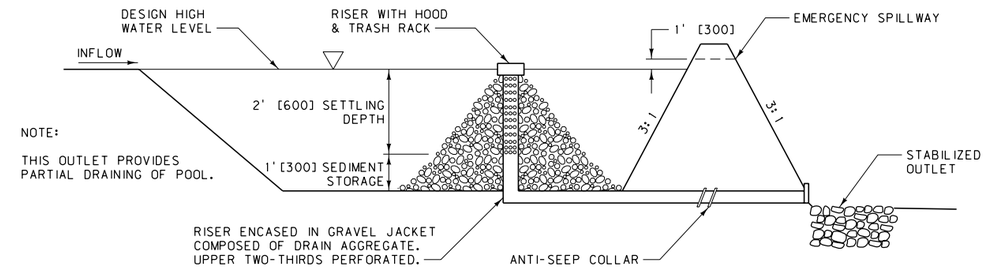

NOTE:

THIS OUTLET PROVIDES PARTIAL DRAINING OF POOL.

TYPICAL DESILTING BASIN - OUTLET #1

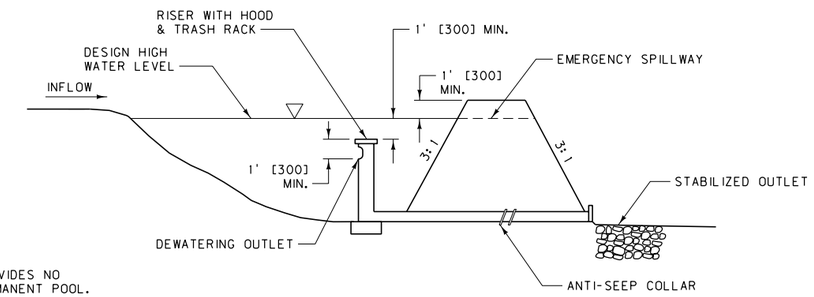

NOTE:

THIS OUTLET PROVIDES NO DRAINING OF PERMANENT POOL.

TYPICAL DESILTING BASIN - OUTLET #2

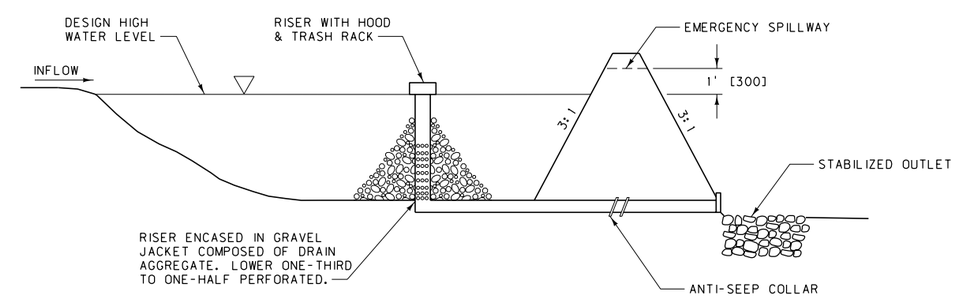

NOTE:

THIS OUTLET PROVIDES COMPLETE DRAINING OF POOL.

TYPICAL DESILTING BASIN - OUTLET #3

UNITS SHOWN IN BRACKETS [] ARE METRIC AND ARE IN MILLIMETERS (mm) UNLESS OTHER UNITS ARE SHOWN.

DETAILED DRAWING	
REFERENCE STANDARD SPEC. SECTION 208, 622	DWG. NO. 208-32
DESILTING BASIN (SC-2)	
EFFECTIVE: SEPTEMBER 2014	

MDT MONTANA DEPARTMENT OF TRANSPORTATION

SYMBOL: ——— ST ———

SEDIMENT TRAP SC-3:

1. A SEDIMENT TRAP IS A TEMPORARY BASIN WITH A CONTROLLED RELEASE STRUCTURE, FORMED BY EXCAVATING OR CONSTRUCTION OF AN EARTHEN EMBANKMENT ACROSS A LOW DRAINAGE AREA.

2. USE SEDIMENT TRAPS WHEN DISTURBED AREAS ARE LESS THAN 5 ACRES [2 ha]. THIS BMP CAN BE USED TO PROVIDE ADDITIONAL PROTECTION FOR A WATER BODY OR FOR REDUCING SEDIMENT BEFORE IT ENTERS A DRAINAGE SYSTEM.

3. SEDIMENT BASINS ARE NOT APPROPRIATE FOR DRAINAGE AREAS LARGER THAN 5 ACRES [2 ha] AND ONLY REMOVE LARGE TO MEDIUM SIZED PARTICLES. DO NOT USE SEDIMENT TRAPS IN LIVE STREAMS.

4. A MINIMUM SETTLING ZONE OF 70 C.Y. PER ACRE [130 m^3 PER ha] AND A MINIMUM SEDIMENT ZONE OF 35 C.Y. PER ACRE [65 m^3 PER ha] IS REQUIRED FOR EACH SEDIMENT TRAP. ANY TRAP MEETING THE DEFINITION OF A "HIGH HAZARD DAM" MUST BE DESIGNED BY A PROFESSIONAL CIVIL ENGINEER LICENSED IN THE STATE OF MONTANA. ALL TRAPS LARGER THAN 1300 C.Y. [1000 m^3] REQUIRE A DESIGN BY A PROFESSIONAL ENGINEER LICENSED IN THE STATE OF MONTANA.

5. PLACE ROCK, VEGETATION, GEOTEXTILE OR BLANKETS TO PROTECT THE TRAP'S INLET, OUTLET AND SLOPES AGAINST EROSION. ENCLOSE THE SEDIMENT TRAP WITH CHAIN LINK FENCE WHEN PLACED IN RESIDENTIAL/COMMERCIAL AREAS OR AS DIRECTED BY THE PROJECT MANAGER.

6. REFER TO DESILTING BASINS FOR RISER PIPE CONFIGURATIONS AND OVERFLOW SPILLWAY DESIGNS.

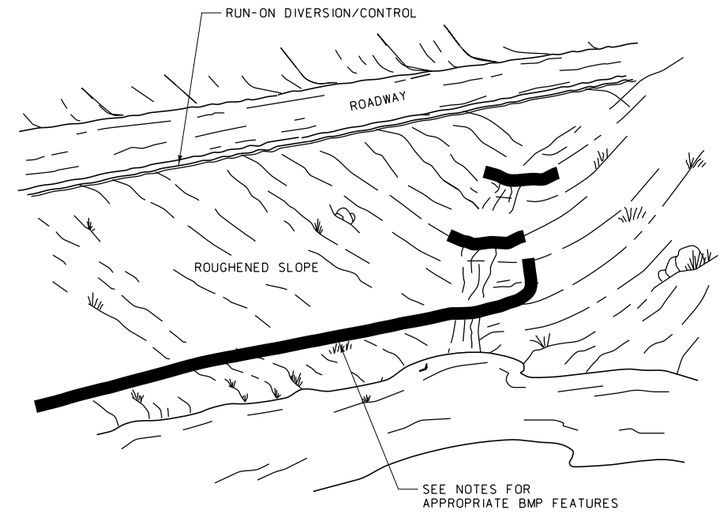

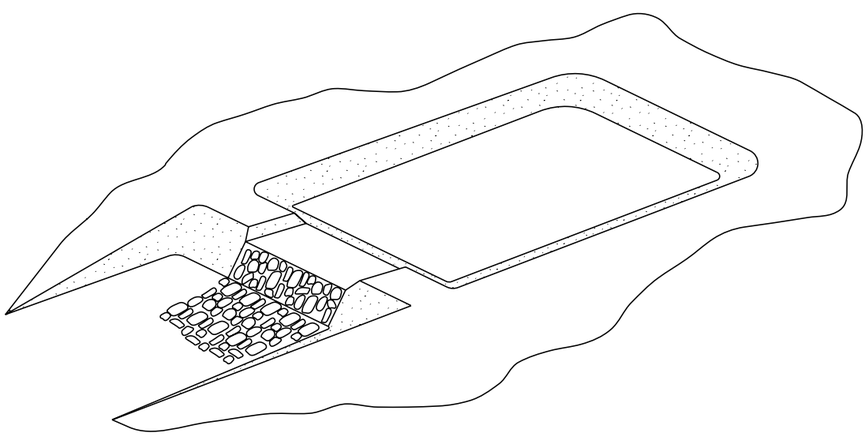

TYPICAL SEDIMENT TRAP WITH SPILLWAY TYPE OUTFALL

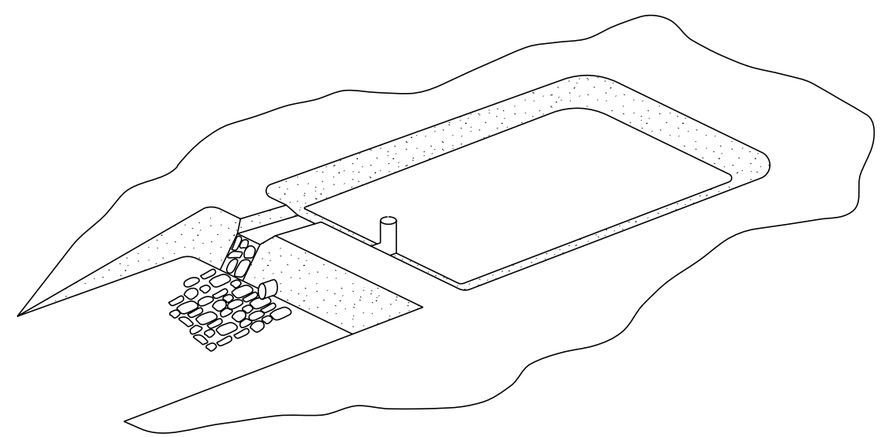

TYPICAL SEDIMENT TRAP WITH RISER PIPE TYPE OUTFALL

UNITS SHOWN IN BRACKETS [] ARE METRIC AND ARE IN MILLIMETERS (mm) UNLESS OTHER UNITS ARE SHOWN.

DETAILED DRAWING	
REFERENCE STANDARD SPEC. SECTION 208	DWG. NO. 208-34
SEDIMENT TRAP (SC-3)	
EFFECTIVE: SEPTEMBER 2014	

MDT MONTANA DEPARTMENT OF TRANSPORTATION

SYMBOL: ———CD———

CHECK DAMS SC-4:

① A CHECK DAM IS A SMALL DEVICE CONSTRUCTED OF GRAVEL, SANDBAGS, OR FIBER ROLLS, PLACED ACROSS A NATURAL OR MAN-MADE CHANNEL OR DRAINAGE DITCH. CHECK DAMS REDUCE SCOUR AND CHANNEL EROSION BY REDUCING FLOW VELOCITIES AND ENCOURAGING SEDIMENT DROPOUT.

② CHECK DAMS MAY BE INSTALLED IN SMALL CHANNELS WITH DRAINAGE AREAS OF 10 ACRES [4 ha] OR LESS AND/OR STEEP CHANNELS WHERE STORM WATER RUNOFF VELOCITIES EXCEED 5 FT./S [1.5 m/s]. THE MAXIMUM HEIGHT FOR CHECK DAMS WITHIN THE CLEAR ZONE IS 6" [150].

③ CHECK DAMS CANNOT BE USED IN LIVE STREAMS OR FOR DRAINAGE AREAS LARGER THAN 10 ACRES [4 ha]. IN ADDITION, CHECK DAMS CANNOT BE CONSTRUCTED FROM SILT FENCE.

④ PLACE CHECK DAMS AT A DISTANCE THAT WILL ALLOW SMALL POOLS TO BE FORMED BEHIND EACH DAM. INSTALL THE FIRST CHECK DAM APPROXIMATELY 15 FT. [5 m] FROM THE OUTFALL DEVICE. PLACE MULTIPLE CHECK DAMS SUCH THAT BACKWATER FROM THE DOWN-STREAM DAM WILL REACH THE TOE OF THE UPSTREAM DAM. ROCK MAY BE PLACED BY HAND OR BY MECHANICAL METHODS TO ACHIEVE COMPLETE DITCH OR SWALE COVERAGE.

⑤ CHECK DAMS CONSTRUCTED FROM GRAVEL MUST BE 100% PASSING THE 2" [50] SCREEN AND 10% MAXIMUM PASSING THE NO. 4 [4.75] SIEVE. DAM MATERIAL MAY BE PITRUN OR CRUSHED AGGREGATE. REFER TO DTL. DWG. NO. 203-38 AND 208-42 FOR USE OF FIBER ROLLS AND SAND BAGS AS CHECK DAMS.

⑥ REMOVE SEDIMENT FROM BEHIND THE DAM WHEN IT ACCUMULATES TO ONE-HALF THE ORIGINAL HEIGHT UNLESS ITS DRAINAGE AREA HAS BEEN STABILIZED.

⑦ DISTANCES BETWEEN CHECK DAMS ARE AS FOLLOWS:
- 1% DITCH SLOPE - PLACE CHECK DAMS AT 200 FT. [60 m] SPACING
- 2% DITCH SLOPE - PLACE CHECK DAMS AT 100 FT. [30 m] SPACING
- 3% DITCH SLOPE - PLACE CHECK DAMS AT 67 FT. [20 m] SPACING
- 4% DITCH SLOPE - PLACE CHECK DAMS AT 50 FT. [15 m] SPACING
- 5% DITCH SLOPE - PLACE CHECK DAMS AT 40 FT. [12 m] SPACING
- >5% DITCH SLOPE - PLACE CHECK DAMS AS DIRECTED BY PROJECT MANAGER

⑧ CHECK DAM SPACING MAY BE ADJUSTED ON A PROJECT-BY-PROJECT BASIS BY THE PROJECT MANAGER.

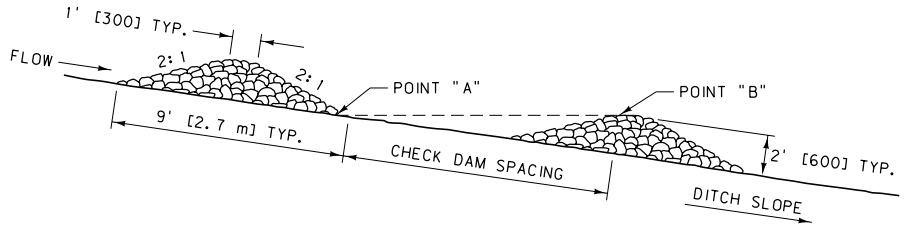

CHECK DAM SPACING

CHECK DAM SPACING = THE DISTANCE SUCH THAT POINTS "A" AND "B" ARE OF EQUAL ELEVATION

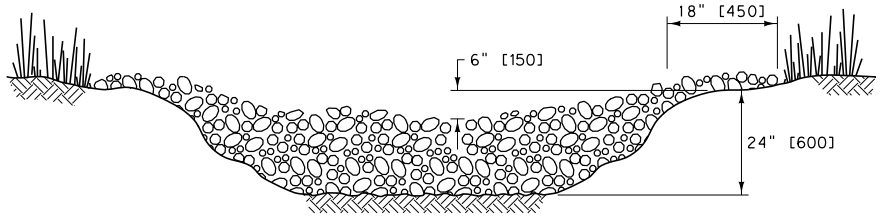

UPSTREAM VIEW

NOTE:
KEY GRAVEL INTO CHANNEL BANKS AND EXTEND IT BEYOND THE ABUTMENTS A MINIMUM OF 18" [450] TO PREVENT FLOW AROUND DAM

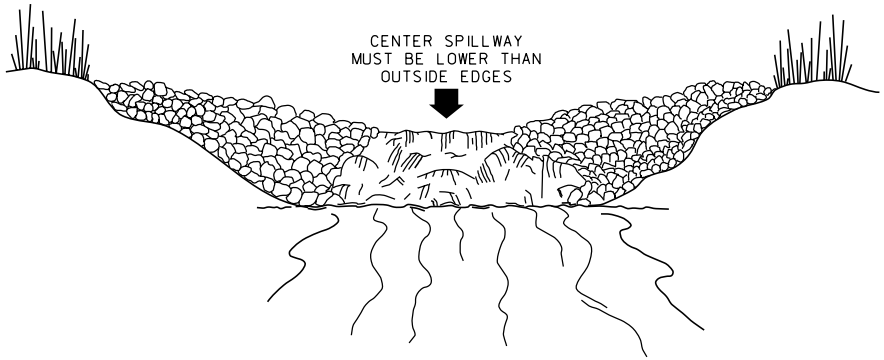

UNITS SHOWN IN BRACKETS [] ARE METRIC AND ARE IN MILLIMETERS (mm) UNLESS OTHER UNITS ARE SHOWN.

DETAILED DRAWING	
REFERENCE STANDARD SPEC. SECTION 208	DWG. NO. 208-36
CHECK DAMS (SC-4)	
EFFECTIVE: SEPTEMBER 2014	

MDT MONTANA DEPARTMENT OF TRANSPORTATION

SYMBOL: ——— FR ———

FIBER ROLLS SC-5:

① A FIBER ROLL CONSISTS OF EROSION CONTROL BLANKET MATERIAL THAT IS PREFABRICATED, OR ROLLED AND BOUND IN THE FIELD INTO A TIGHT TUBULAR ROLL AND PLACED ON THE FACE OF SLOPES AT REGULAR INTERVALS TO INTERCEPT RUNOFF, REDUCE ITS FLOW VELOCITY, RELEASE THE RUNOFF AS SHEET FLOW, AND PROVIDE SOME REMOVAL OF SEDIMENT FROM THE RUNOFF.

② FIBER ROLLS MAY BE USED ALONG THE TOP, FACE, AND AT GRADE BREAKS OF EXPOSED AND ERODIBLE SLOPES TO SHORTEN SLOPE LENGTH AND SPREAD RUNOFF AS SHEET FLOW. ROLLS MAY BE USED AS CHECK DAMS IF APPROVED BY THE PROJECT MANAGER. FOR USE AS CHECK DAMS, PLACE FIBER ROLLS AT 50 FT. [15 m]MAXIMUM SPACING OR AS APPROVED BY THE PROJECT MANAGER.

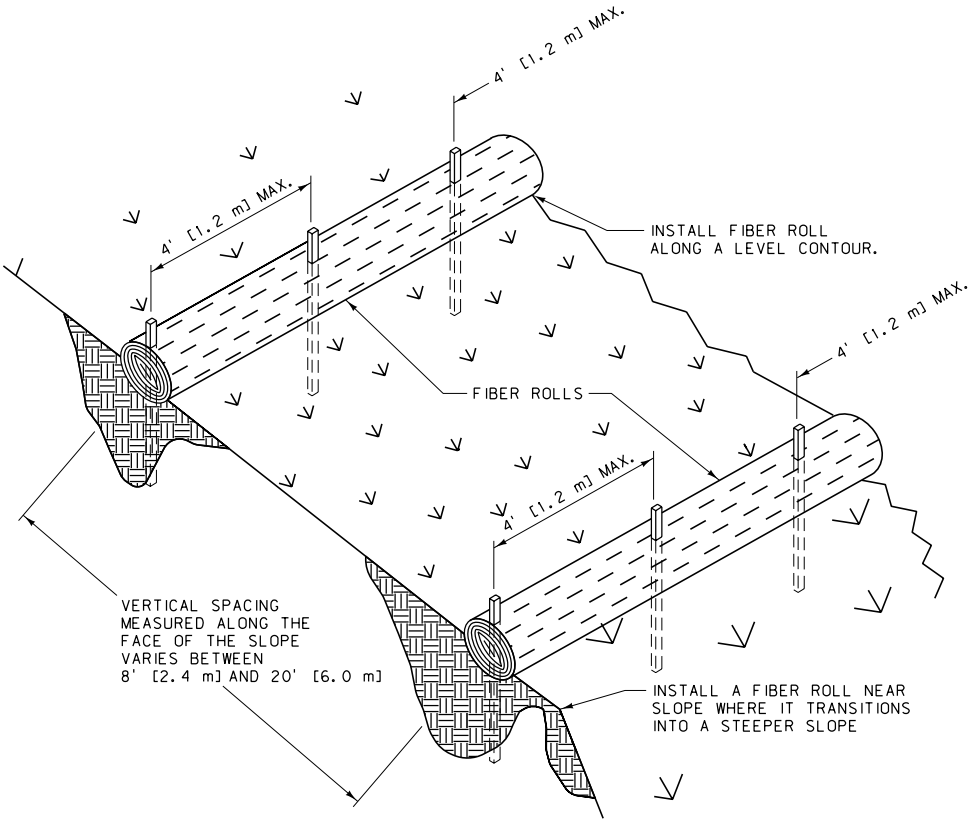

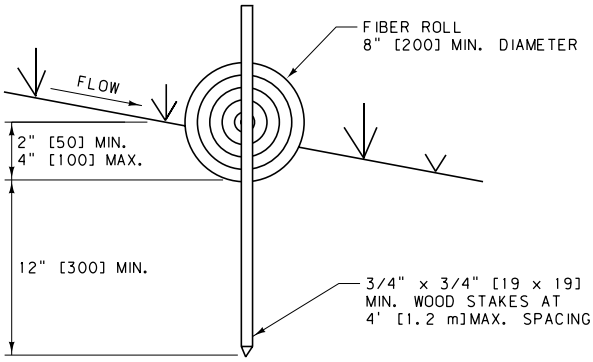

UNITS SHOWN IN BRACKETS [] ARE METRIC AND ARE IN MILLIMETERS (mm) UNLESS OTHER UNITS ARE SHOWN.

DETAILED DRAWING	
REFERENCE STANDARD SPEC. SECTION 208	DWG. NO. 208-38
FIBER ROLLS (SC-5)	
EFFECTIVE: SEPTEMBER 2014	

MDT MONTANA DEPARTMENT OF TRANSPORTATION

SYMBOL: ——— GBB ———

GRAVEL BAG BERM SC-6:

1. A GRAVEL BAG BERM CONSISTS OF A SINGLE ROW OF GRAVEL BAGS THAT ARE INSTALLED END-TO-END TO FORM A BARRIER ACROSS A SLOPE TO INTERCEPT RUNOFF, REDUCE RUNOFF VELOCITY, RELEASE RUNOFF AS SHEET FLOW, AND PROVIDE SOME SEDIMENT REMOVAL. GRAVEL BAG BERMS CAN BE USED ALONG THE FACE AND AT GRADE BREAKS OF EXPOSED AND ERODIBLE SLOPES TO SHORTEN SLOPE LENGTHS AND SPREAD RUNOFF AS SHEET FLOW.

2. THESE DEVICES ARE NOT TO BE USED IN PLACE OF A LINEAR SEDIMENT BARRIER (I.E., SILT FENCE, SANDBAG BARRIERS, OR STRAW BALE BARRIERS).

3. USE WOVEN POLYPROPYLENE, POLYETHYLENE, OR POLYAMIDE FABRIC OR BURLAP MATERIAL FOR BAGS. BAG MATERIAL IS REQUIRED TO HAVE A MINIMUM UNIT WEIGHT OF 0.25 LB./S.Y. [135 g/m²],MULLEN BURST STRENGTH EXCEEDING 300 PSI [2 070 kPa] AND AN ULTRAVIOLET STABILIZATION EXCEEDING 70%.

4. USE GRAVEL BAGS HAVING A LENGTH OF 1'-6" [450], WIDTH OF 12" [300], THICKNESS OF 3" [75], AND A MASS OF APPROXIMATELY 35 LB [15 kg]. ALTERNATIVE BAG SIZES REQUIRE PROJECT MANAGER'S APPROVAL PRIOR TO USE.

5. FILL GRAVEL BAGS APPROXIMATELY 75% FULL WITH GRAVEL CONSISTING OF 100% PASSING THE 3/4" [19]SCREEN AND 10% MAXIMUM PASSING THE NO. 4 [4.75]SIEVE. FILL MATERIAL MAY BE PITRUN OR CRUSHED AGGREGATE. FILL MATERIAL IS SUBJECT TO APPROVAL BY THE PROJECT MANAGER.

6. TIGHTLY PLACE GRAVEL BAGS TO MINIMIZE GAPS BETWEEN BAGS. BAGS MAY BE STAGGERED ON A PROJECT-BY-PROJECT BASIS AS APPROVED BY THE PROJECT MANAGER.

7. PLACE GRAVEL BAG BERMS AT 8 FT. TO 20 FT. [2.4 TO 6.0 m]SPACING ALONG THE SLOPE. FOR ABNORMALLY STEEP OR SHALLOW SLOPES FOLLOW PROJECT MANAGER'S GUIDELINES.

8. ALL BAGS PLACED WITHIN THE CLEAR ZONE REQUIRE MEASURES TO PROTECT GRAVEL FROM FREEZING. ALL FREEZE REDUCTION METHODS REQUIRE PROJECT MANAGER'S APPROVAL PRIOR TO IMPLEMENTATION.

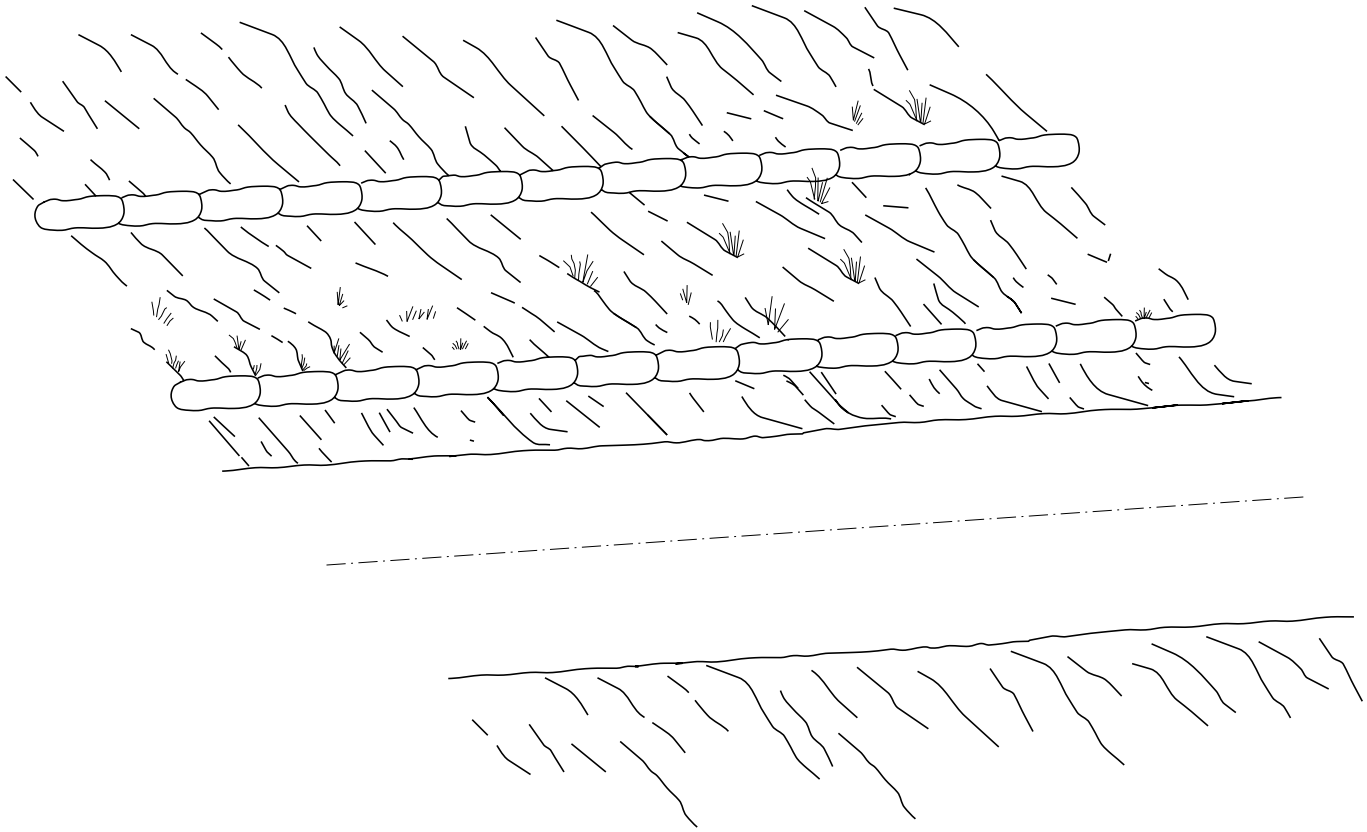

UNITS SHOWN IN BRACKETS [] ARE METRIC AND ARE IN MILLIMETERS (mm) UNLESS OTHER UNITS ARE SHOWN.

DETAILED DRAWING	
REFERENCE STANDARD SPEC. SECTION 208	DWG. NO. 208-40
GRAVEL BAG BERM (SC-6)	
EFFECTIVE: SEPTEMBER 2014	
MDT MONTANA DEPARTMENT OF TRANSPORTATION	

SYMBOL: ——— SAND-B ———

SAND BAG BARRIERS SC-8:

1. A SANDBAG BARRIER IS A TEMPORARY LINEAR SEDIMENTATION BARRIER CONSISTING OF STACKED SANDBAGS, DESIGNED TO INTERCEPT AND SLOW THE FLOW OF SEDIMENT-LADEN SHEET FLOW RUNOFF. SANDBAGS CAN ALSO BE USED WHERE FLOWS ARE MODERATELY CONCENTRATED, SUCH AS DITCHES, SWALES, AND STORM DRAIN INLETS TO DIVERT AND/OR DETAIN FLOWS.

2. LIMIT THE USE OF SANDBAG BARRIERS TO DRAINAGE AREAS OF 5 ACRES [2 ha] OR SMALLER.

3. USE WOVEN POLYPROPYLENE, POLYETHYLENE, OR POLYAMIDE FABRIC OR BURLAP MATERIAL FOR BAGS. BAG MATERIAL IS REQUIRED TO HAVE A MINIMUM UNIT WEIGHT OF 0.25 LB./S.Y. [135 g/m²], A MULLEN BURST STRENGTH EXCEEDING 300 PSI [2070 kPa] AND AN ULTRAVIOLET STABILIZATION EXCEEDING 70%.

4. USE SANDBAGS HAVING A LENGTH OF 1'-6" [450], WIDTH OF 12" [300], THICKNESS OF 3" [75], AND A MASS OF APPROXIMATELY 35 LB [15 kg]. ALTERNATIVE BAG SIZES MAY REQUIRE PROJECT MANAGER'S APPROVAL PRIOR TO USE.

5. FILL SANDBAGS WITH SAND CONSISTING OF 100% PASSING THE NO. 4 [4.75] SIEVE, 50% PASSING THE NO. 10 [2.00 mm] SIEVE, AND 20% MAXIMUM PASSING THE NO. 200 [0.075] SIEVE. FILL MATERIAL IS SUBJECT TO APPROVAL BY THE PROJECT MANAGER.

6. WHEN INSTALLING SANDBAG BARRIERS AS LINEAR CONTROL, PLACE BAGS ALONG A LEVEL CONTOUR. UPON ENDING THE SANDBAG RUN, PLACE THE LAST BAGS TO ANGLE UP THE SLOPE SO THAT FLOWS DO NOT ESCAPE AROUND THE END.

7. WHEN SANDBAG BARRIERS ARE PLACED IN CONCENTRATED FLOWS, STACK SANDBAGS TO HEIGHT USING A PYRAMID APPROACH WITH THE UPPER SANDBAGS OVERLAPPING THE LOWER ROW. THIS APPLICATION MAY NOT BE USED WITHIN THE CLEAR ZONE UNLESS OVERALL HEIGHT IS 6" [150] OR LESS.

8. ALL BAGS PLACED WITHIN THE CLEAR ZONE REQUIRE MEASURES TO PROTECT SAND FROM FREEZING. ALL FREEZE REDUCTION METHODS REQUIRE PROJECT MANAGER'S APPROVAL PRIOR TO IMPLEMENTATION.

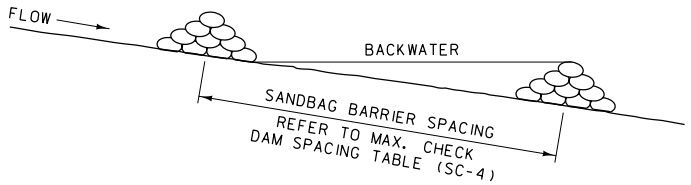

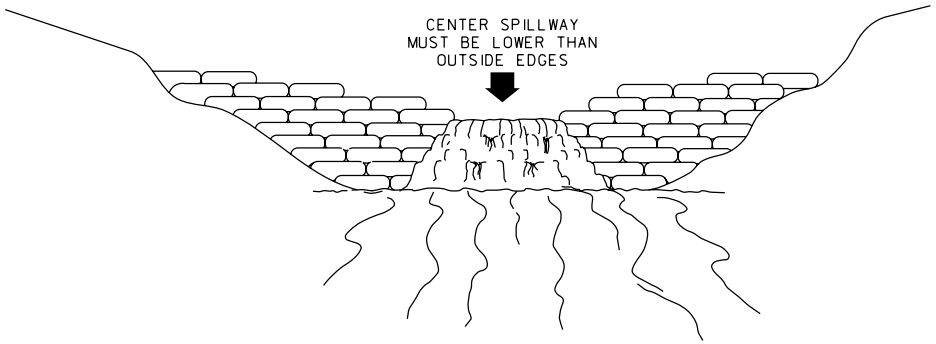

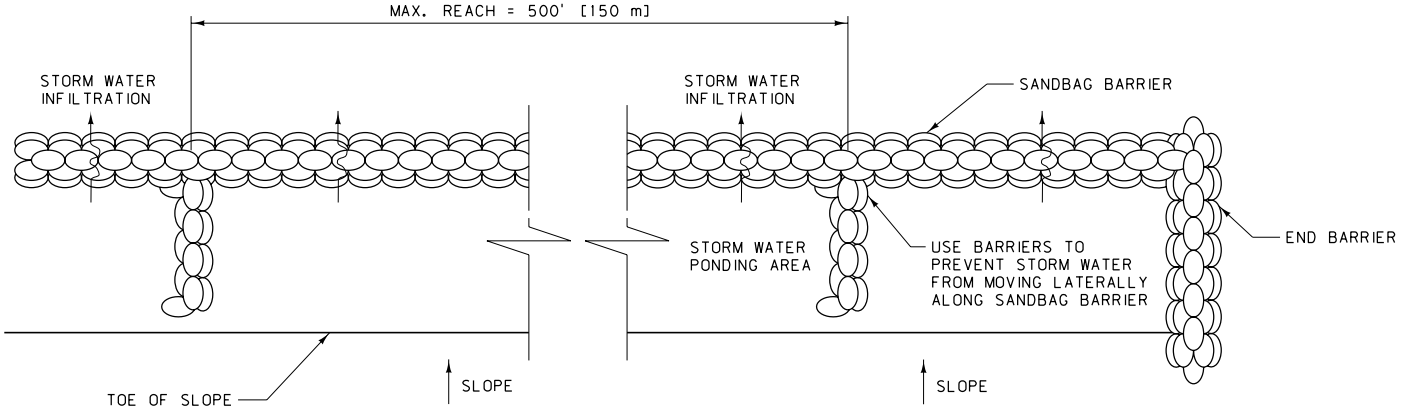

UNITS SHOWN IN BRACKETS [] ARE METRIC AND ARE IN MILLIMETERS (mm) UNLESS OTHER UNITS ARE SHOWN.

DETAILED DRAWING	
REFERENCE STANDARD SPEC. SECTION 208	DWG. NO. 208-42
SAND BAG BARRIERS (SC-8)	
EFFECTIVE: SEPTEMBER 2014	

MDT MONTANA DEPARTMENT OF TRANSPORTATION

SYMBOL: ——— STRAW-B ———

STRAW BALE BARRIERS SC-9:

1. STRAW BALE BARRIERS ARE A SEDIMENT BARRIER CONSISTING OF ENTRENCHED, OVERLAPPING AND ANCHORED STRAW BALES THAT REDUCE RUNOFF VELOCITIES AND RETAIN SEDIMENT. DO NOT USE STRAW BALE BARRIERS INSIDE THE CLEAR ZONE. STRAW BALES MUST BE CERTIFIED WEED-FREE.

2. STRAW BALE BARRIERS ARE USED FOR SHEET OR CONCENTRATED FLOWS TO REDUCE RUNOFF VELOCITY, PROMOTE SEDIMENT RETENTION AND ALLOW SETTLING. DO NOT USE STRAW BALES IN HIGH FLOWS SUCH AS CHANNELS OR LIVE STREAMS. IN ADDITION, STRAW BALES CANNOT BE USED ON SURFACES WHICH DO NOT ALLOW FOR ENTRENCHMENT.

3. MINIMUM STRAW BALES SIZE REQUIREMENTS ARE A WIDTH OF 1'-2" [360], HEIGHT OF 1'-6" [450], LENGTH OF 3 FT. [900] AND A MASS OF 50 LB [23 kg]. USE STEEL WIRE (16 GAUGE [1.57 DIAMETER] MIN.), NYLON OR POLYPROPYLENE STRING (1/16" [2] MIN. DIAMETER) TO BIND BALES. MINIMUM BREAKING STRENGTH OF BINDING MATERIAL IS 80 LB [360 N]. USE 2" BY 2" [50 x 50] (NOMINAL) BY 3 FT. [900] LONG WOODEN STAKES. DO NOT USE METAL STAKES.

4. INSTALL STRAW BALES ALONG A LEVEL CONTOUR, WITH THE LAST BALE TURNED UP SLOPE. PLACE BALES IN A 4" [100] DEEP TRENCH, TIGHTLY ABUT ADJACENT BALES, AND STAKE USING A MINIMUM OF TWO STAKES PER BALE. IF SLOPES EXCEED 10:1 THE LENGTH OF SLOPE UP STREAM OF THE BARRIER MUST BE LESS THAN 50 FT. [15 m]. OFFSET BALES AT LEAST 3 FT. [1 m] FROM THE TOE OF SLOPES. IF SITE CONDITIONS DO NOT ALLOW FOR OFFSET, BALES MAY BE PLACED AT TOE.

5. FOLLOW GUIDELINES IN DTL. DRWG. NO. 208-36 IF BALES ARE USED AS CHECK DAMS.

6. REPAIR OR REPLACE DAMAGED, UNDER-CUT OR END RUN BALES. REMOVE SEDIMENT BUILDUP FROM BALES ONCE IT REACHES A HEIGHT OF 1/3 THE BALE HEIGHT.

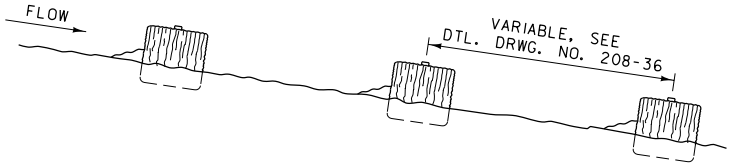

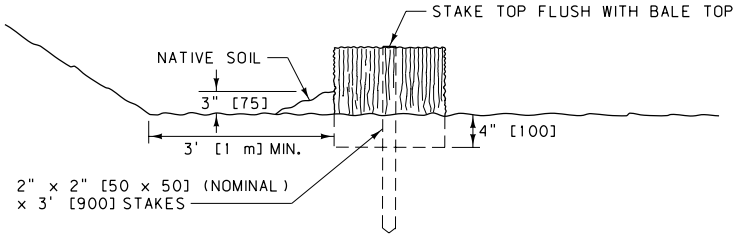

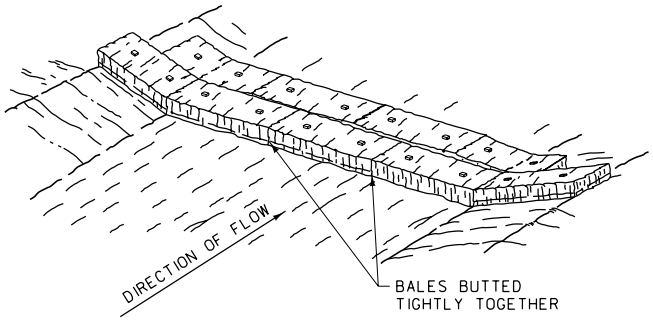

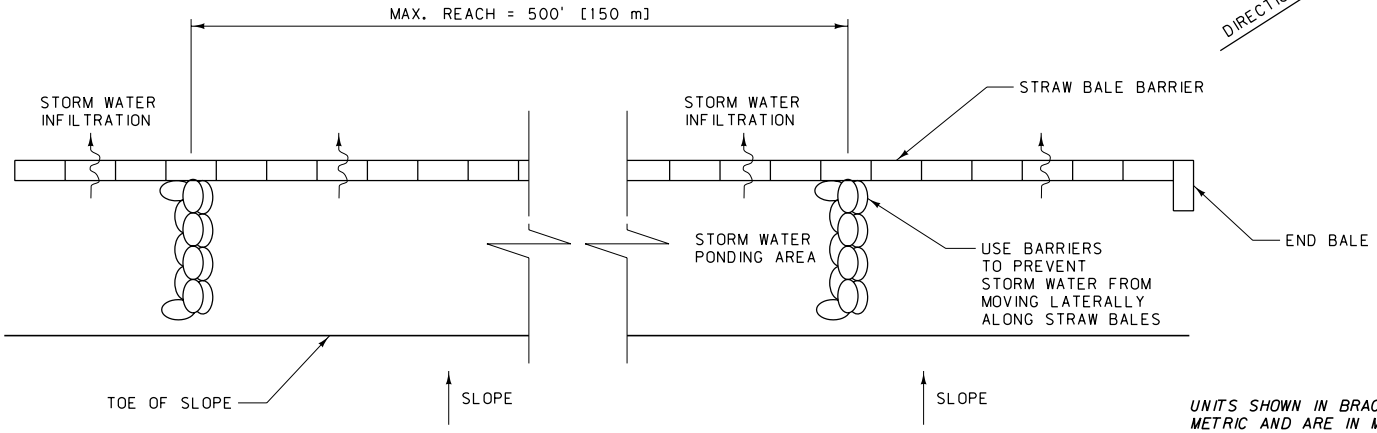

UNITS SHOWN IN BRACKETS [] ARE METRIC AND ARE IN MILLIMETERS (mm) UNLESS OTHER UNITS ARE SHOWN.

DETAILED DRAWING	
REFERENCE STANDARD SPEC. SECTION 208	DWG. NO. 208-44
STRAW BALE BARRIERS (SC-9)	
EFFECTIVE: SEPTEMBER 2014	

MDT MONTANA DEPARTMENT OF TRANSPORTATION

SYMBOL: SDP

STORM DRAIN INLET PROTECTION SC-10:

1. STORM DRAIN INLET PROTECTION IS USED AT STORM DRAIN INLETS THAT ARE SUBJECT TO RUNOFF FROM CONSTRUCTION ACTIVITIES. THESE DEVICES DRAIN AND/OR FILTER SEDIMENT-LADEN RUNOFF AND ALLOW SEDIMENT TO SETTLE PRIOR TO DISCHARGE OF STORM WATER INTO STORM WATER DRAINAGE SYSTEMS OR WATERCOURSES.

2. USE STORM DRAIN INLET PROTECTION WHEN PONDING WILL NOT ENCROACH INTO HIGHWAY AND FOR DRAINAGE AREAS OF 1 ACRE [0.4 ha]OR LESS. FOR FLOWS LESS THAN 0.5 CFS [0.014 m^3/s]SILT FENCE OR STRAW BALES MAY BE USED. WHEN FLOWS EXCEED 0.5 CFS [0.014 m^3/s]USE SANDBAG BARRIERS OR GRAVEL CHECK DAMS. FOLLOW SILT FENCE (SC-1), STRAW BALE BARRIERS (SC-9), SANDBAG BARRIERS (SC-8) AND CHECK DAMS (SC-4) FOR INSTALLATION REQUIREMENTS FOR EACH TYPE OF MATERIAL.

3. STRAW BALES, SAND BAGS, AND GRAVEL BERMS MAY BE USED WITHIN THE CLEAR ZONE UPON PROJECT MANAGER'S APPROVAL. EXPEDIENTLY REMOVE ALL STRAW BALES, SAND BAGS, AND GRAVEL BERMS FROM THE CLEAR ZONE UPON COMPLETION OF CONSTRUCTION ACTIVITIES.

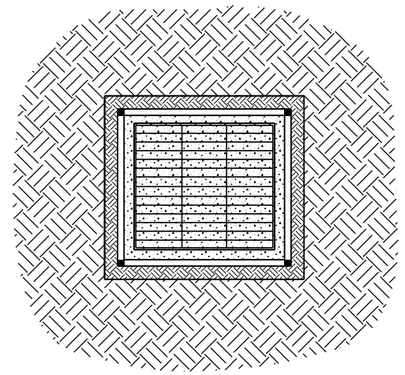

SILT FENCE - PLAN VIEW

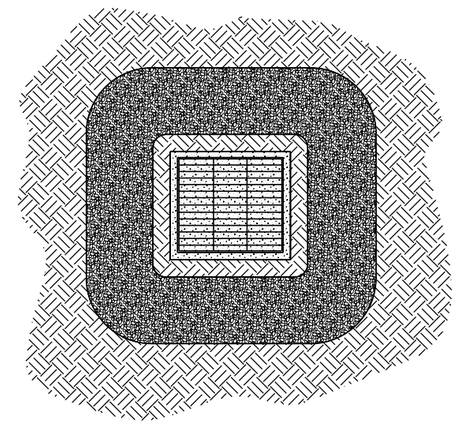

GRAVEL CHECK DAM - PLAN VIEW

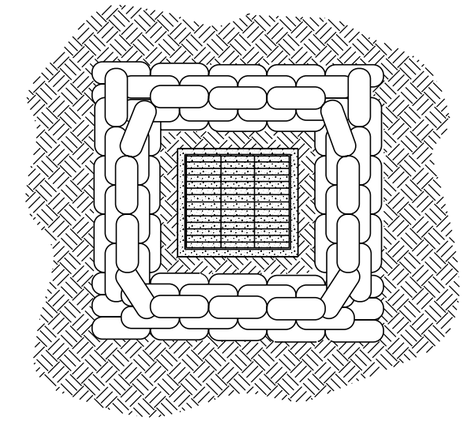

SANDBAG BARRIER - PLAN VIEW

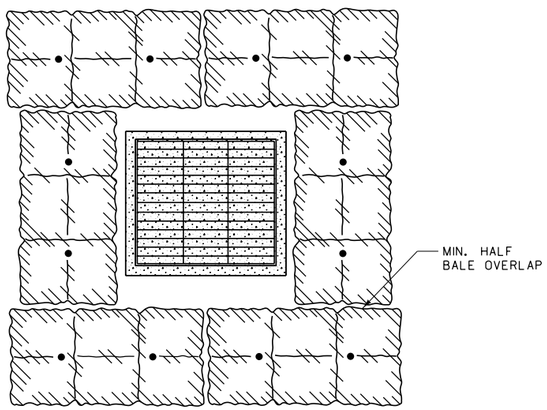

STRAW BALE BARRIER - PLAN VIEW

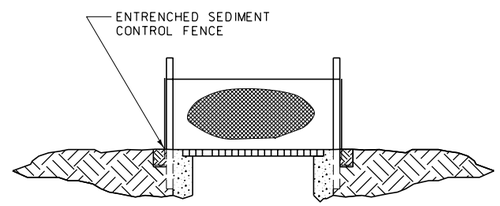

SILT FENCE - PROFILE VIEW

GRAVEL CHECK DAM - PROFILE VIEW

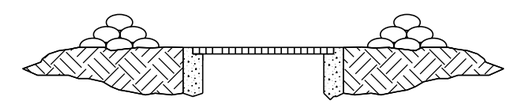

SANDBAG BARRIER - PROFILE VIEW

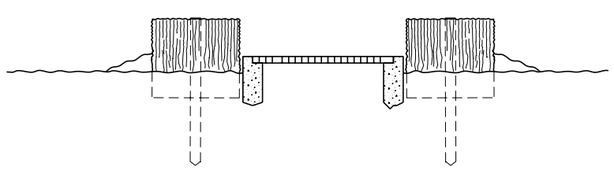

STRAW BALE BARRIER - PROFILE VIEW

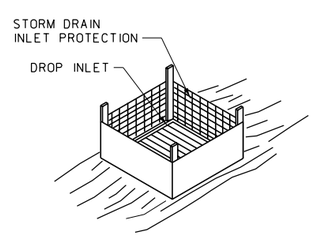

EXAMPLE ISOMETRIC VIEW

UNITS SHOWN IN BRACKETS [] ARE METRIC AND ARE IN MILLIMETERS (mm) UNLESS OTHER UNITS ARE SHOWN.

DETAILED DRAWING	
REFERENCE STANDARD SPEC. SECTION 208	DWG. NO. 208-46
STORM DRAIN INLET PROTECTION (SC-10)	
EFFECTIVE: SEPTEMBER 2014	
MDT MONTANA DEPARTMENT OF TRANSPORTATION	

SYMBOL: ——— DDB ———

DUGOUT DITCH BASIN SC-11:

1. DUGOUT DITCH BASINS CONSIST OF ONE OR A SERIES OF SMALL DUGOUT BASINS USED FOR CONCENTRATED FLOWS TO REDUCE RUNOFF VELOCITY, PROMOTE SEDIMENT RETENTION AND ALLOW SETTLING. THE MAXIMUM HEIGHT FOR DUGOUT DITCH BASINS USED INSIDE THE CLEAR ZONE IS 6" [150].

2. DUGOUT DITCH BASINS ARE USED FOR LONGITUDINAL SLOPE STEEPNESS (GRADE) SEDIMENT RETENTION. APPLICATIONS INCLUDE DITCH SEDIMENT TRAPS, INTERCEPTOR DITCHES AND TOE OF SLOPE PROTECTION. USE IS DEPENDENT ON SOIL TYPE. DISTANCES BETWEEN DUGOUT DITCH BASINS ARE AS FOLLOWS:
   - FROM 2% TO 3% DITCH SLOPE PLACE DUGOUT DITCH BASINS AT 300 FT. [90 m]SPACING
   - FROM 3% TO 4% DITCH SLOPE PLACE DUGOUT DITCH BASINS AT 150 FT. [45 m]SPACING
   - FROM 4% + DITCH SLOPE PLACE DUGOUT DITCH BASINS AT 50 FT. [15 m]SPACING

3. DUGOUT DITCH BASIN SPACING CAN BE ADJUSTED ON A PROJECT-BY-PROJECT BASIS FOLLOWING PROJECT MANAGER'S APPROVAL.

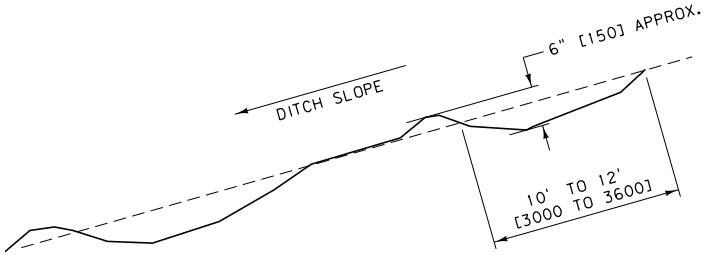

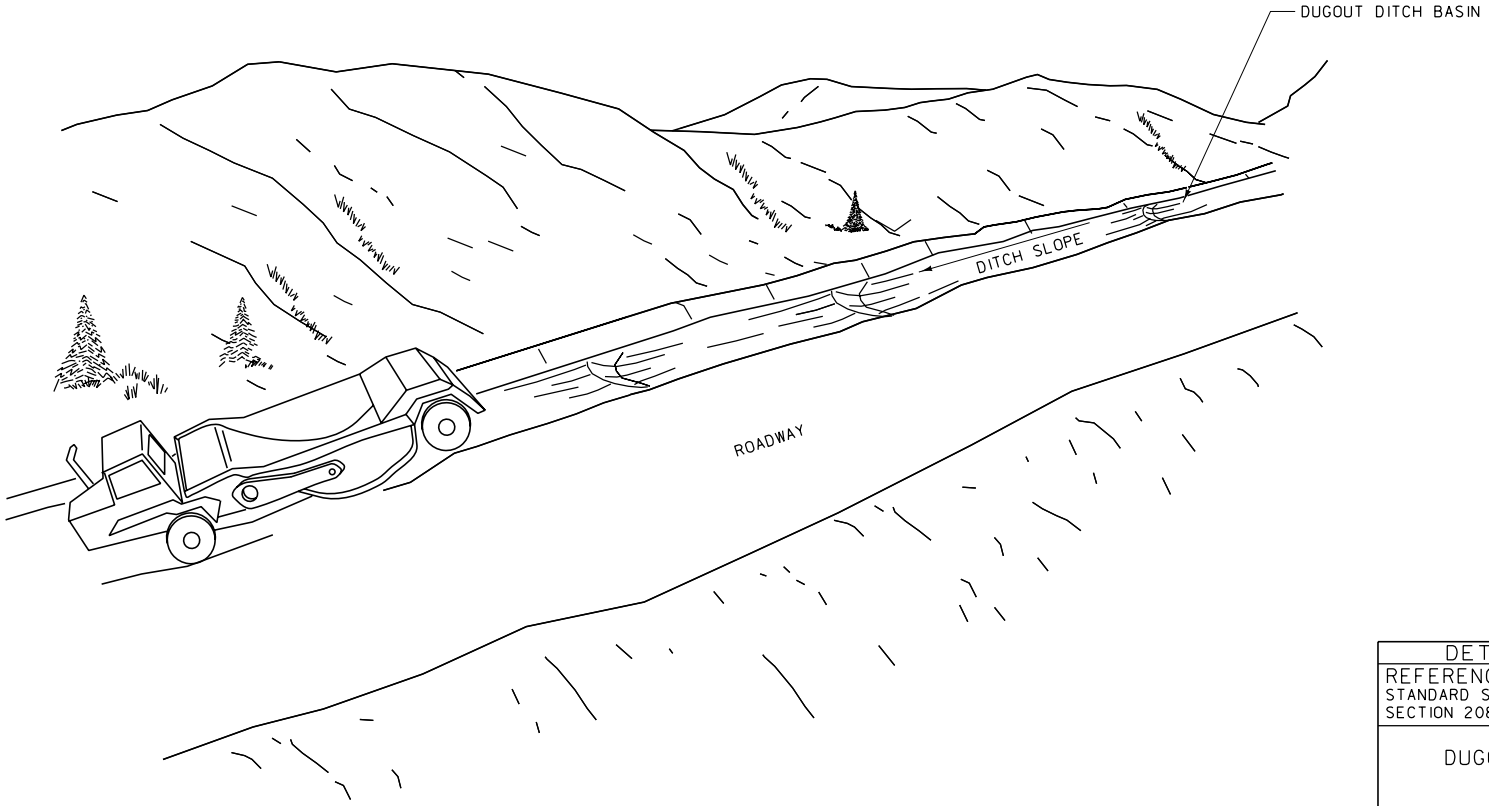

UNITS SHOWN IN BRACKETS [] ARE METRIC AND ARE IN MILLIMETERS (mm) UNLESS OTHER UNITS ARE SHOWN.

DETAILED DRAWING	
REFERENCE STANDARD SPEC. SECTION 208	DWG. NO. 208-48
DUGOUT DITCH BASIN (SC-11)	
EFFECTIVE: SEPTEMBER 2014	

MDT MONTANA DEPARTMENT OF TRANSPORTATION

SYMBOL: SCEE

STABILIZED CONSTRUCTION ENTRANCE/EXIT TC-1:

1. A STABILIZED CONSTRUCTION ACCESS IS A DEFINED POINT OF ENTRANCE/EXIT TO A CONSTRUCTION SITE THAT IS STABILIZED TO REDUCE THE TRACKING OF MUD AND DIRT ONTO PUBLIC ROADS BY CONSTRUCTION VEHICLES.

2. USE STABILIZED CONSTRUCTION ACCESSES WHERE DIRT AND MUD MAY BE TRACKED ONTO PUBLIC ROADS, ADJACENT TO WATER BODIES, WHERE POOR SOILS ARE ENCOUNTERED, WHERE DUST MAY BE A PROBLEM, OR AS SPECIFIED BY THE PROJECT MANAGER.

3. CONSTRUCT STABILIZED CONSTRUCTION ENTRANCES WITH GRAVEL CONSISTING OF 100% PASSING THE 2" [50]SCREEN AND A MAXIMUM OF 10% PASSING THE 3/8" [9.5]SIEVE OR OTHER PROJECT MANAGER APPROVED MATERIAL. PROPERLY GRADE ENTRANCES/EXITS TO PREVENT RUNOFF FROM LEAVING THE SITE. PLACE A MOUNDED BERM OF MATERIAL IF REQUIRED TO PREVENT STORM WATER RUN-ON/RUNOFF AND/OR PROVIDE COVER FOR DRAIN PIPE. ROUTE STORM WATER RUNOFF TO A SEDIMENT CONTROL DEVICE BEFORE RUNOFF EXITS THE SITE.

4. STABILIZED CONSTRUCTION ENTRANCE SHALL BE MAINTAINED TO PREVENT TRACKING OF SEDIMENT OFF OF THE SITE. REMOVE AND REPLACE AGGREGATE WHEN VOIDS ARE FILLED OR AS DIRECTED BY THE PROJECT MANAGER.

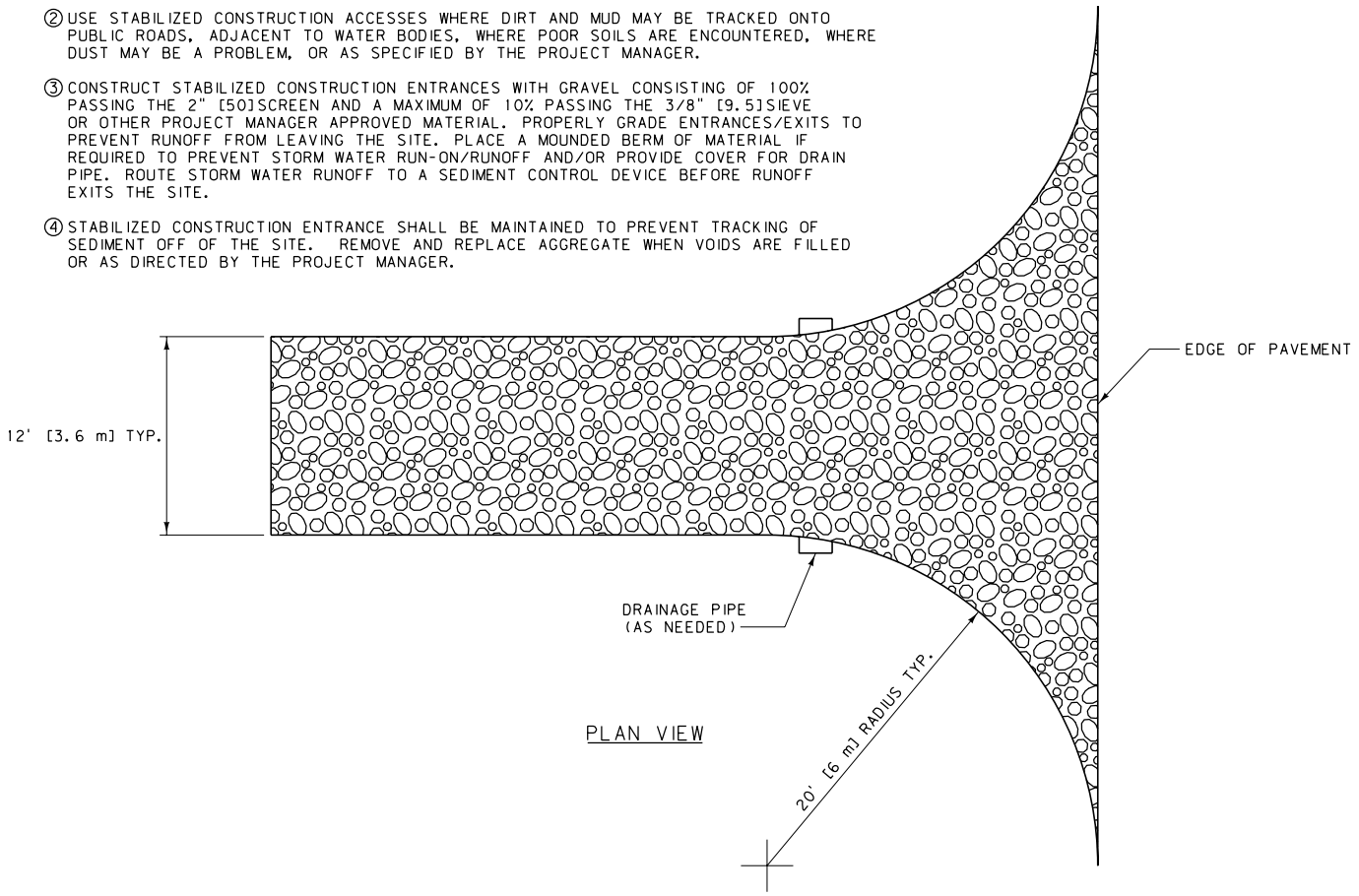

PLAN VIEW

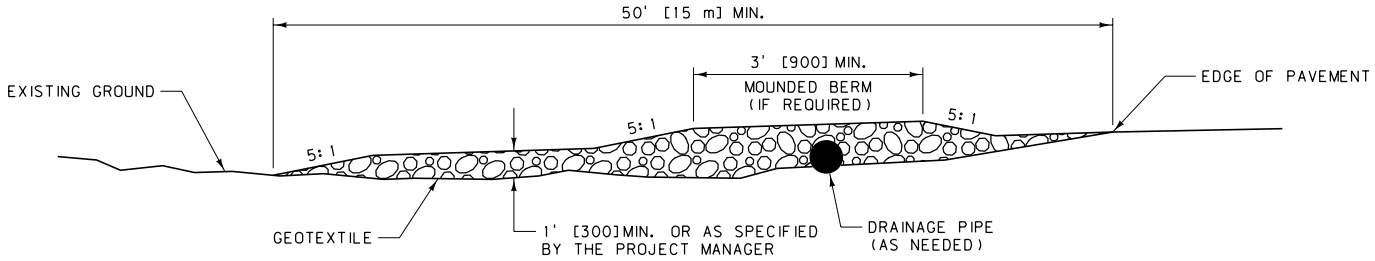

PROFILE VIEW

UNITS SHOWN IN BRACKETS [] ARE METRIC AND ARE IN MILLIMETERS (mm) UNLESS OTHER UNITS ARE SHOWN.

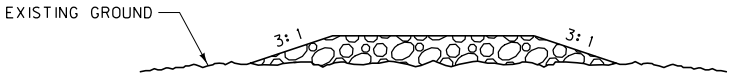

END VIEW

DETAILED DRAWING	
REFERENCE STANDARD SPEC. SECTION 208	DWG. NO. 208-56
STABILIZED CONSTRUCTION ENTRANCE/EXIT (TC-1)	
EFFECTIVE: SEPTEMBER 2014	
MDT MONTANA DEPARTMENT OF TRANSPORTATION	

SYMBOL: EETW

ENTRANCE/EXIT TIRE WASH TC-3:

1. A TIRE WASH IS AN AREA LOCATED AT A STABILIZED CONSTRUCTION ACCESS POINT WHERE PRESSURIZED WATER IS USED TO REMOVE SEDIMENT FROM TIRES AND UNDERCARRIAGE, AND TO PREVENT SEDIMENT FROM BEING TRANSPORTED ONTO PUBLIC ROADWAYS.

2. TIRE WASHES ARE MEANT TO BE USED ON A PROJECT-BY-PROJECT BASIS AND REQUIRES APPROVAL BY THE PROJECT MANAGER. THESE DEVICES REQUIRE A SUPPLY OF WASH WATER AND MAY REQUIRE A TURNOUT OR DOUBLE WIDE ACCESS.

3. FOLLOW DTL. DRWG. NO. 208-56 FOR STABILIZED CONSTRUCTION ENTRANCES/EXITS. PROVIDE WASH RACK SUITABLE FOR SUPPORTING TRAFFIC LOADS. DIRECT WASH WATER FROM THE RACK, THROUGH A DRAINAGE DITCH, TO A SEDIMENT TRAP DEVICE. PROJECT MANAGER'S APPROVAL IS REQUIRED PRIOR TO CONSTRUCTION.

4. TIRE WASH DEVICES OTHER THAN THOSE SHOWN MAY BE USED AS APPROVED BY THE PROJECT MANAGER.

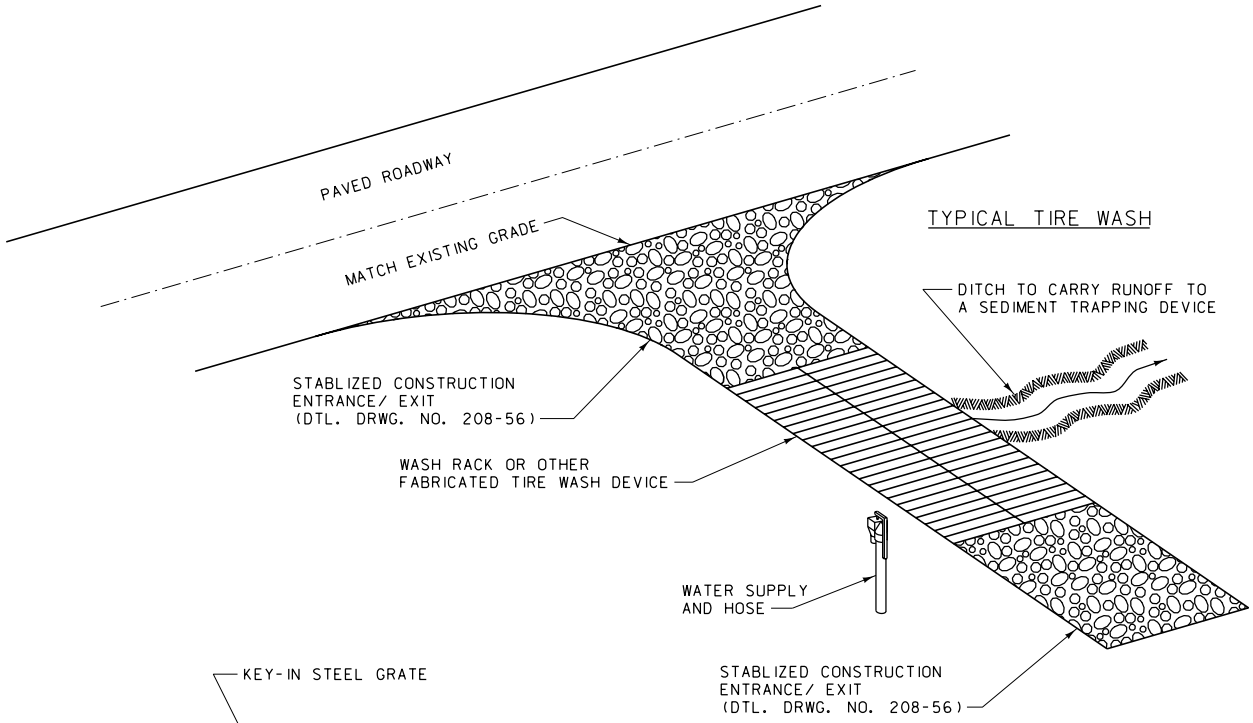

TYPICAL TIRE WASH

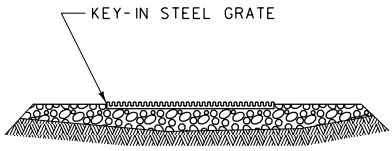

STEEL GRATE WASH RACK

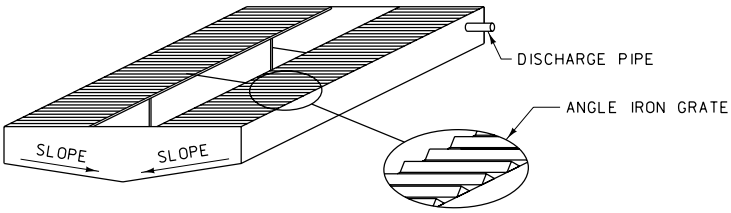

SELF-CONTAINED STEEL TIRE WASH

UNITS SHOWN IN BRACKETS [] ARE METRIC AND ARE IN MILLIMETERS (mm) UNLESS OTHER UNITS ARE SHOWN.

DETAILED DRAWING	
REFERENCE STANDARD SPEC. SECTION 208	DWG. NO. 208-58
ENTRANCE/EXIT TIRE WASH (TC-3)	
EFFECTIVE: SEPTEMBER 2014	
MDT MONTANA DEPARTMENT OF TRANSPORTATION	

TEMPORARY STREAM CROSSINGS NS-4:

1. A TEMPORARY STREAM CROSSING IS A STRUCTURE PLACED ACROSS A WATERWAY THAT ALLOWS VEHICLES AND/OR HEAVY EQUIPMENT TO CROSS THE WATERWAY DURING CONSTRUCTION. THE STREAM CROSSINGS PROTECT THE STREAM BANKS AND CHANNELS FROM DAMAGE CAUSED BY VEHICLE MOVEMENT WHICH RELEASES SEDIMENT.

2. TEMPORARY STREAM CROSSINGS CAN CONSIST OF BRIDGES, CULVERTS OR FORDS. FOLLOW STREAM CROSSING GUIDELINES PROVIDED IN THE MDT/FWP TASK FORCE RECOMMENDATIONS REPORT. TEMPORARY STREAM CROSSINGS REQUIRE THE ACQUISITION OF SPECIAL PERMITS.

3. INSTALL PERMANENT EROSION CONTROL GEOTEXTILE IN ACCORDANCE WITH MANUFACTURER'S SPECIFICATIONS AND SECTION 622.

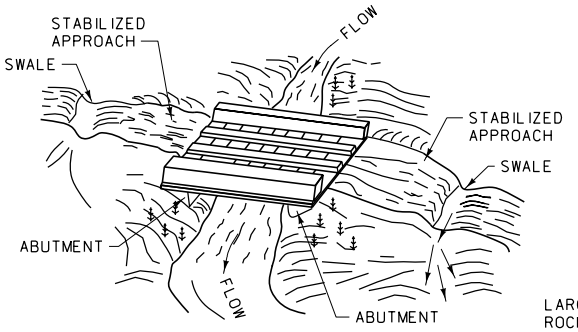

NOTE:

SURFACE FLOW OF ROAD DIVERTED BY SWALE AND/OR DIKE

TYPICAL BRIDGE CROSSING

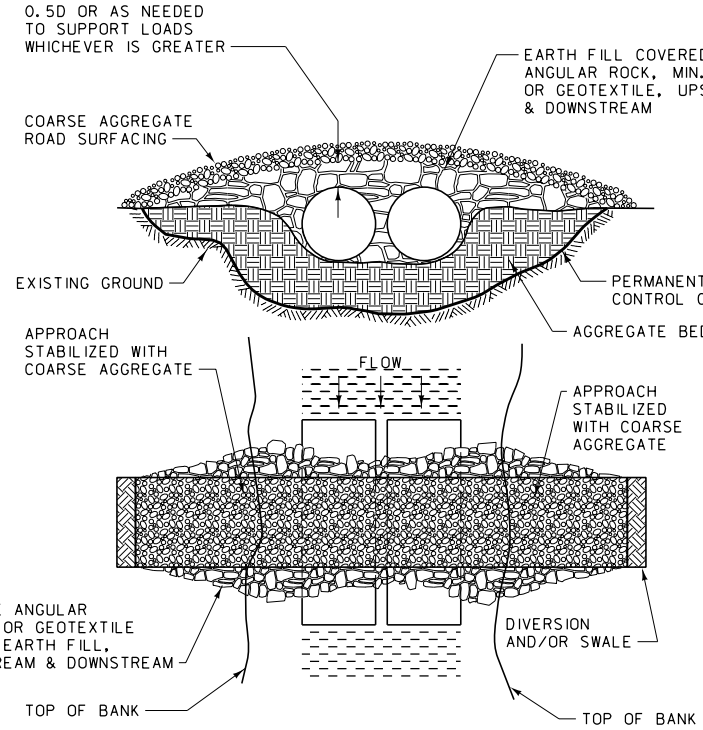

TYPICAL CULVERT CROSSING

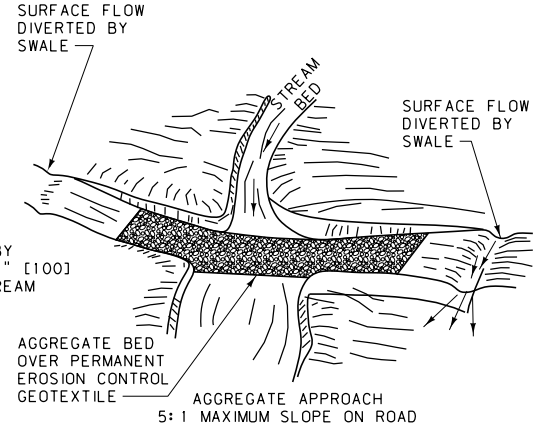

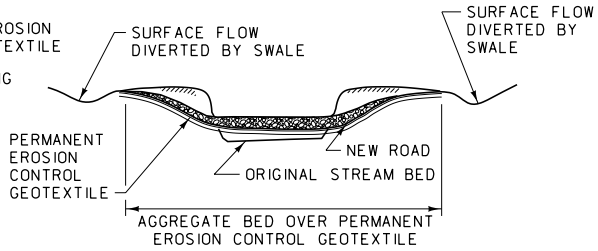

TYPICAL FORD CROSSING

UNITS SHOWN IN BRACKETS [] ARE METRIC AND ARE IN MILLIMETERS (mm) UNLESS OTHER UNITS ARE SHOWN.

DETAILED DRAWING	
REFERENCE STANDARD SPEC. SECTION 208, 622	DWG. NO. 208-60
TEMPORARY STREAM CROSSINGS (NS-4)	
EFFECTIVE: SEPTEMBER 2014	

MDT MONTANA DEPARTMENT OF TRANSPORTATION

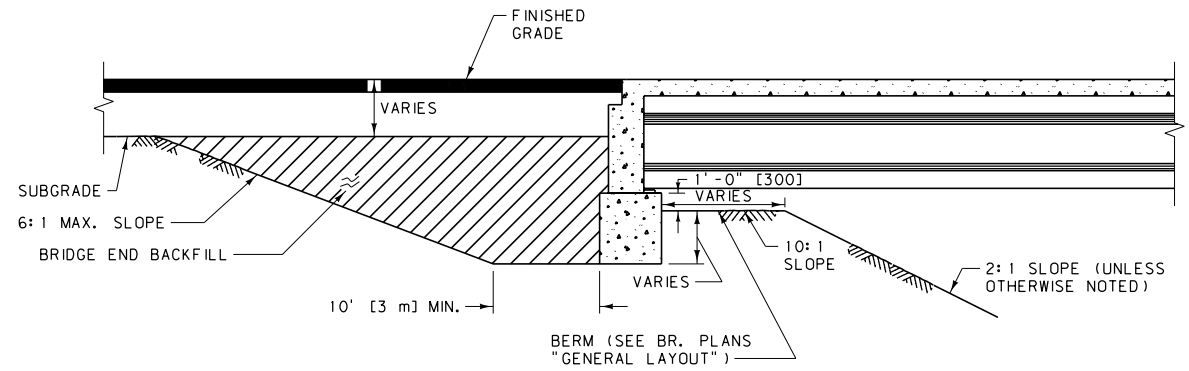

SECTION A-A

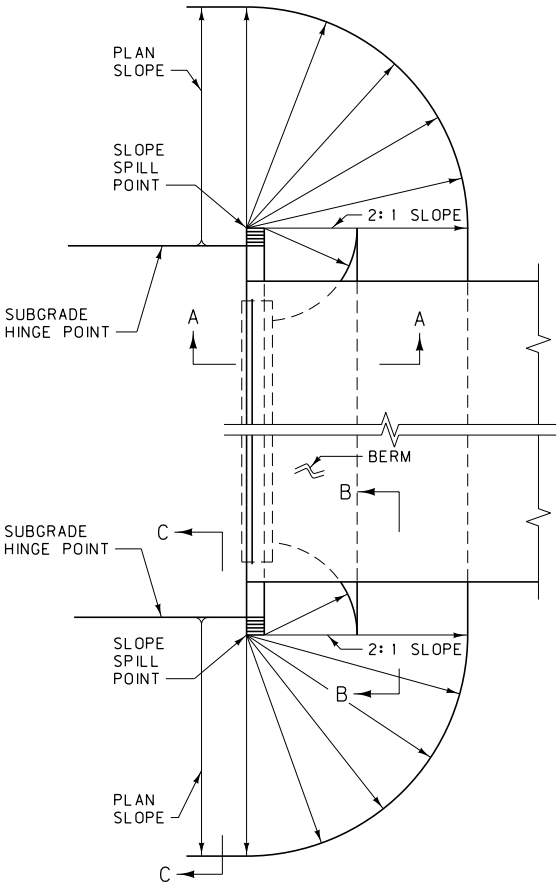

PLAN VIEW

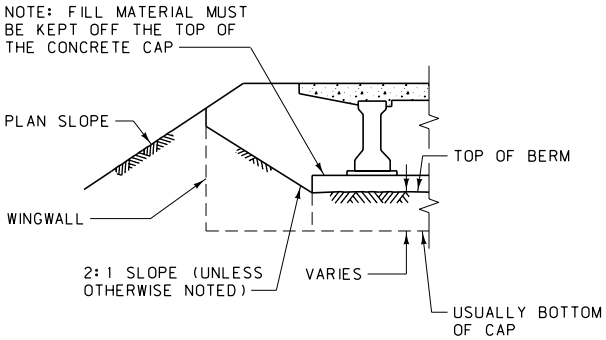

SECTION B-B

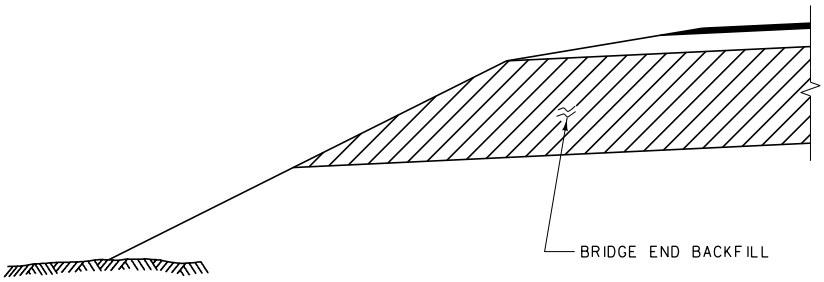

SECTION C-C

UNITS SHOWN IN BRACKETS [] ARE METRIC AND ARE IN MILLIMETERS (mm) UNLESS OTHER UNITS ARE SHOWN.

DETAILED DRAWING	
REFERENCE STANDARD SPEC. SECTION 301, 701	DWG. NO. 301-00
ROADWAY EMBANKMENT AT BRIDGE END	
EFFECTIVE: SEPTEMBER 2014	
MDT MONTANA DEPARTMENT OF TRANSPORTATION	

* DETERMINE THE METHOD OF INSTALLATION FOR RUMBLE STRIPS ON EXISTING CONCRETE SHOULDERS ON A CASE-BY-CASE BASIS.

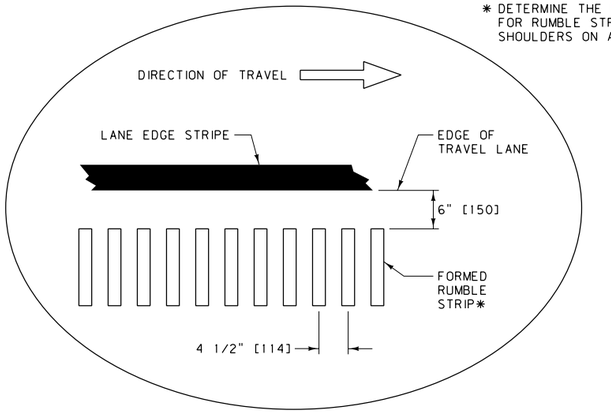

TYPICAL SHOULDER INSTALLATION (CONCRETE PAVEMENT)

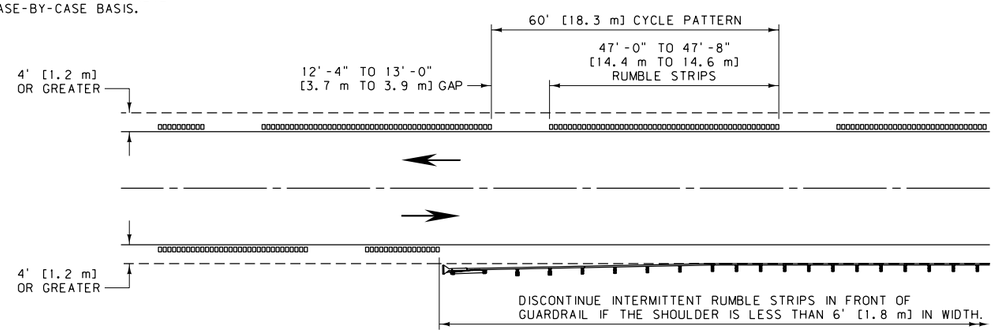

INTERMITTENT RUMBLE STRIP SPACING

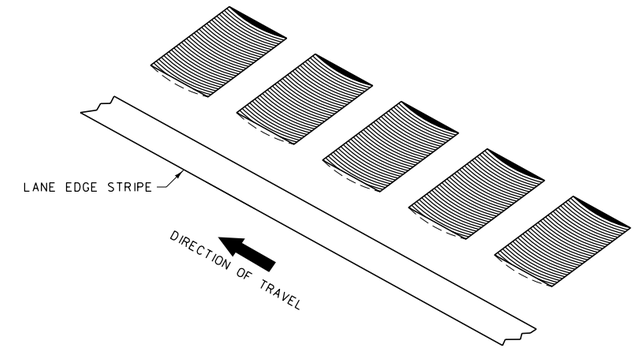

ISOMETRIC VIEW

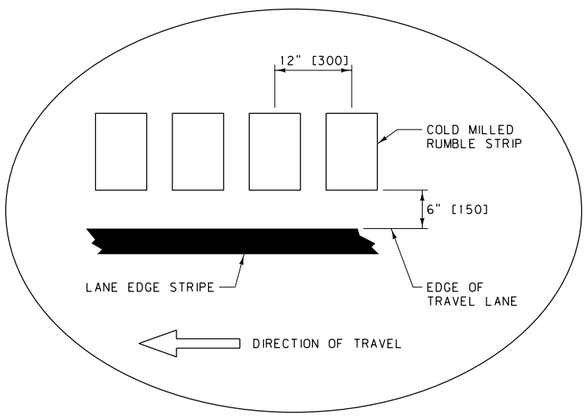

TYPICAL SHOULDER INSTALLATION (ASPHALT PAVEMENT)

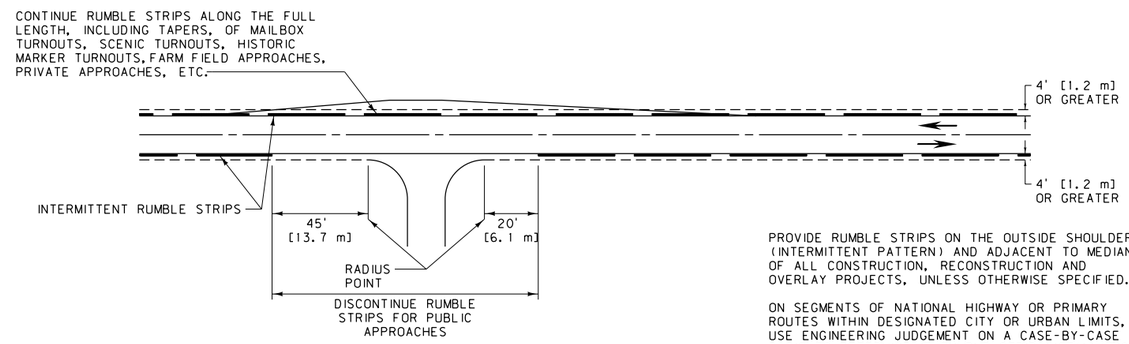

NATIONAL HIGHWAY ROUTE OR PRIMARY ROUTE APPLICATION

PROVIDE RUMBLE STRIPS ON THE OUTSIDE SHOULDERS (INTERMITTENT PATTERN) AND ADJACENT TO MEDIANS OF ALL CONSTRUCTION, RECONSTRUCTION AND OVERLAY PROJECTS, UNLESS OTHERWISE SPECIFIED.

ON SEGMENTS OF NATIONAL HIGHWAY OR PRIMARY ROUTES WITHIN DESIGNATED CITY OR URBAN LIMITS, USE ENGINEERING JUDGEMENT ON A CASE-BY-CASE BASIS TO DETERMINE IF RUMBLE STRIP INSTALLATION IS APPROPRIATE.

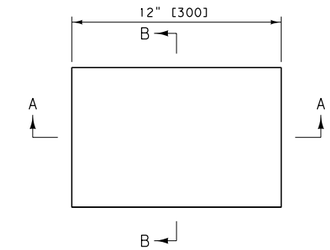

PLAN

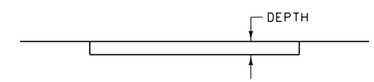

SECTION A-A

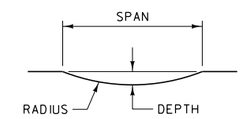

SECTION B-B

	DEPTH	RADIUS	SPAN
CONCRETE	1"	1"	2"
ASPHALT	1/2" TO 3/4"	12" MAX.	6 7/8" TO 8 3/8"

	DEPTH (mm)	RADIUS (mm)	SPAN (mm)
CONCRETE	25	25	50
ASPHALT	13 TO 19	300 MAX.	175 TO 200

RUMBLE STRIP DETAIL

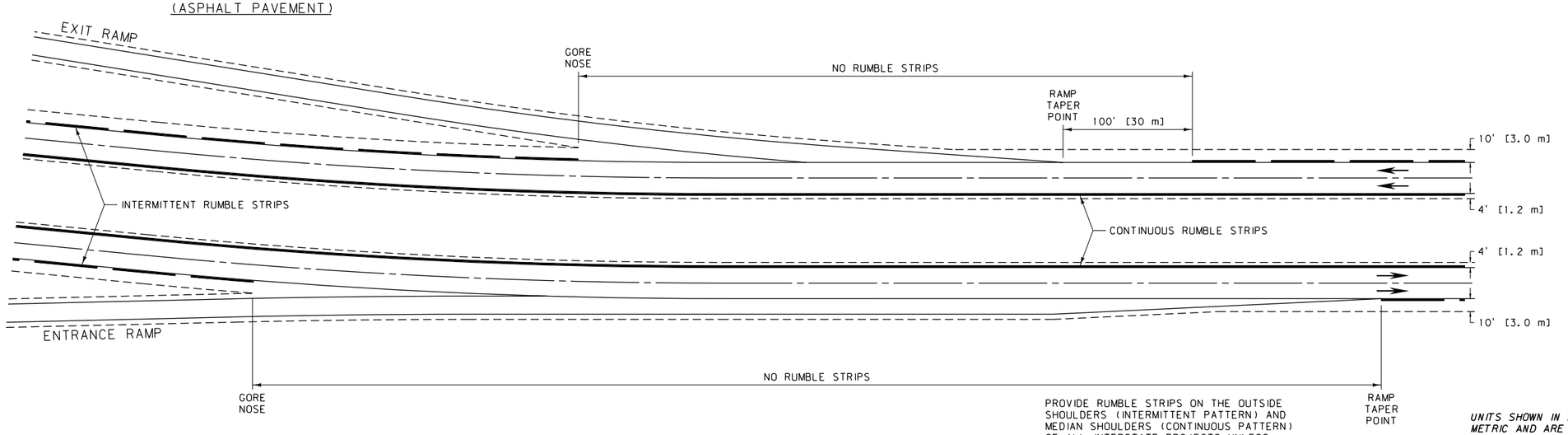

INTERSTATE APPLICATION

PROVIDE RUMBLE STRIPS ON THE OUTSIDE SHOULDERS (INTERMITTENT PATTERN) AND MEDIAN SHOULDERS (CONTINUOUS PATTERN) OF ALL INTERSTATE PROJECTS UNLESS OTHERWISE SPECIFIED.

DISCONTINUE RUMBLE STRIPS IN FRONT OF EXIT AND ENTRANCE RAMPS.

NOTE:

DO NOT INSTALL RUMBLE STRIPS OVER CONCRETE BRIDGE DECKS OR WHERE OBSTACLES, SUCH AS CONCRETE BARRIER RAIL, PREVENT PROPER PLACEMENT.

UNITS SHOWN IN BRACKETS [] ARE METRIC AND ARE IN MILLIMETERS (mm) UNLESS OTHER UNITS ARE SHOWN.

DETAILED DRAWING

REFERENCE STANDARD SPEC. SECTION 411

DWG. NO. 411-02

SHOULDER RUMBLE STRIPS

EFFECTIVE: SEPTEMBER 2014

MDT MONTANA DEPARTMENT OF TRANSPORTATION

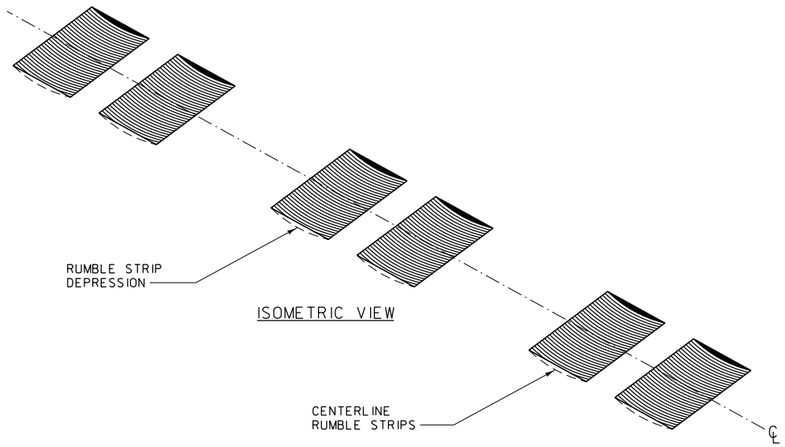

ISOMETRIC VIEW

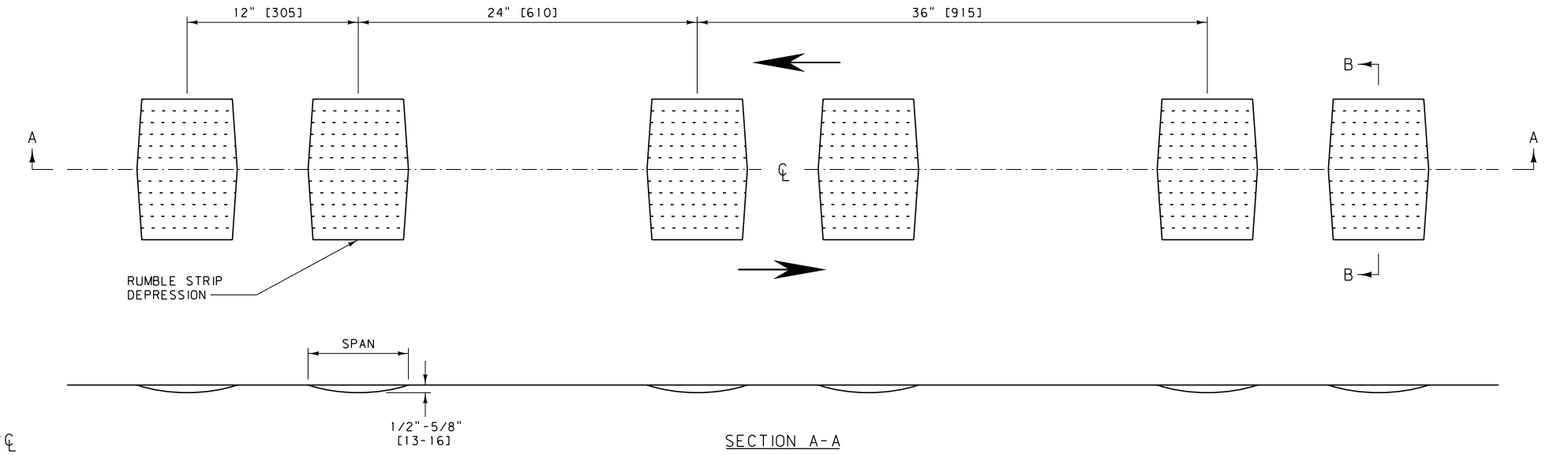

SECTION A-A

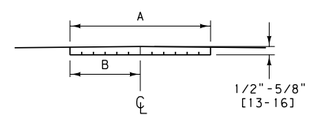

SECTION B-B

ENGLISH DIMENSIONS			
TYPE		INCHES	
		A	B
1	NO SHOULDER	6	3
2	≤ 2.0' SHOULDER	8	4
3	> 2.0' SHOULDER	12	6

METRIC DIMENSIONS			
TYPE		mm	
		A	B
1	NO SHOULDER	150	75
2	≤ 0.6 m SHOULDER	200	100
3	> 0.6 m SHOULDER	300	150

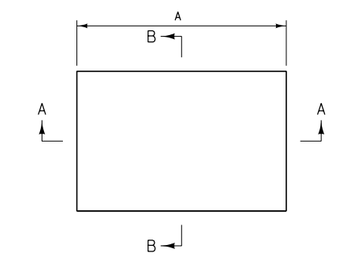

PLAN

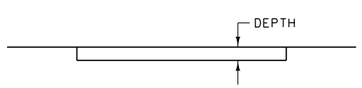

SECTION A-A

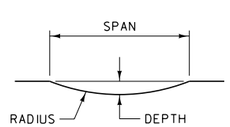

SECTION B-B

	DEPTH	RADIUS	SPAN
ASPHALT	1/2" TO 5/8"	12" MAX.	6 7/8" TO 8 3/8"

	DEPTH (mm)	RADIUS (mm)	SPAN (mm)
ASPHALT	13 TO 16	300 MAX.	175 TO 200

RUMBLE STRIP DETAIL

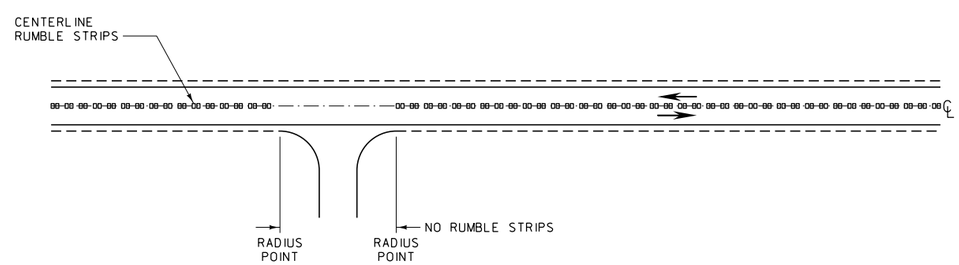

PUBLIC APPROACH②

NOTES:

① ROUTES WITHIN DESIGNATED CITY OR URBAN LIMITS, USE ENGINEERING JUDGEMENT ON A CASE-BY-CASE BASIS TO DETERMINE IF CENERLINE RUMBLE STRIP INSTALLATION IS APPROPRIATE.

② BREAK CENTERLINE RUMBLE STRIPS FOR PUBLIC APPROACHES ONLY.

③ REMILL EXISTING CENTERLINE RUMBLE STRIPS PRIOR TO CHIP SEAL PLACEMENT.

④ DO NOT INSTALL CENTERLINE RUMBLE STRIPS ON CONCRETE BRIDGE DECKS.

UNITS SHOWN IN BRACKETS [] ARE METRIC AND ARE IN MILLIMETERS (mm) UNLESS OTHER UNITS ARE SHOWN.

DETAILED DRAWING

REFERENCE STANDARD SPEC. SECTION 411

DWG. NO. 411-05

CENTERLINE RUMBLE STRIPS

EFFECTIVE: SEPTEMBER 2014

MDT MONTANA DEPARTMENT OF TRANSPORTATION

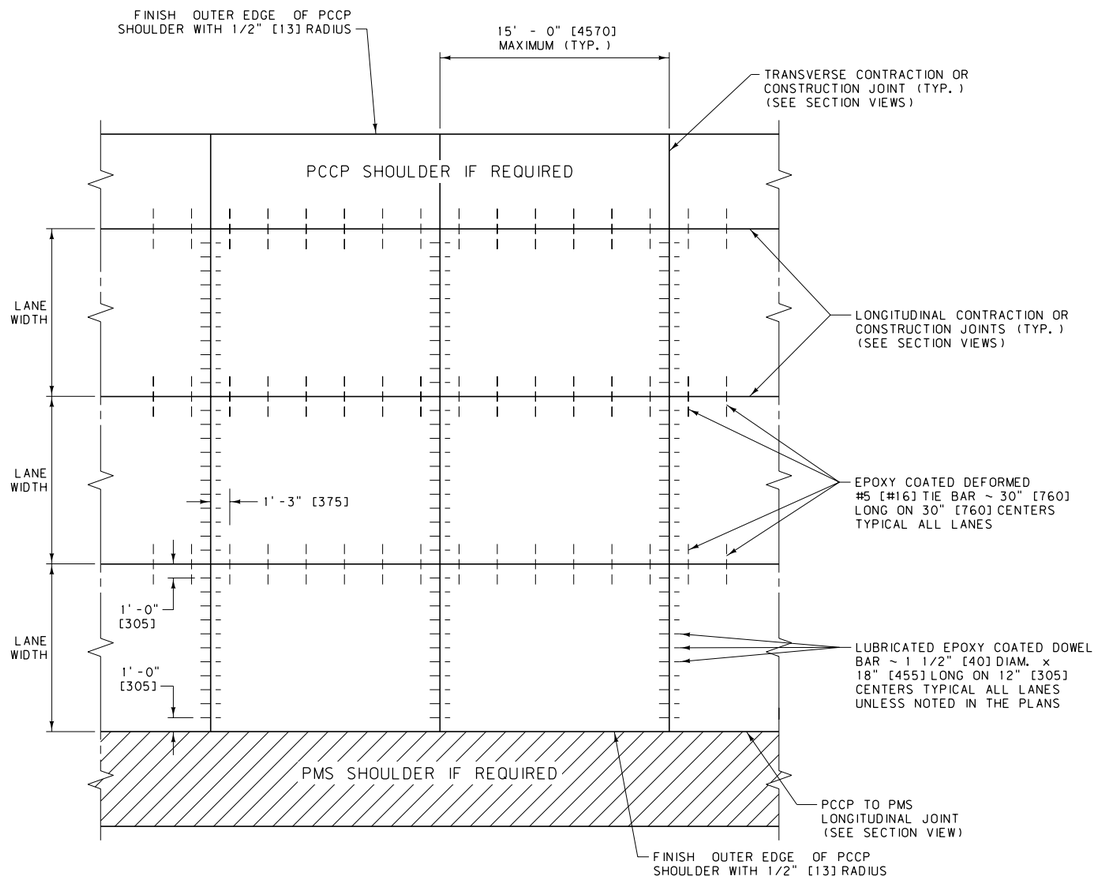

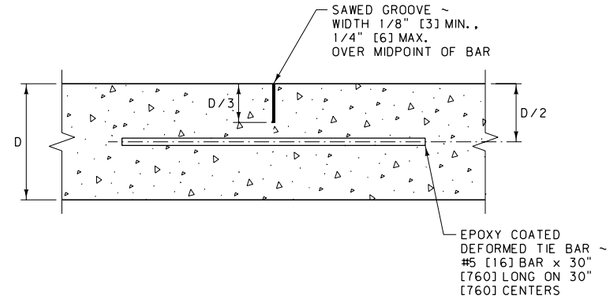

LONGITUDINAL CONTRACTION JOINT

SECTION VIEW

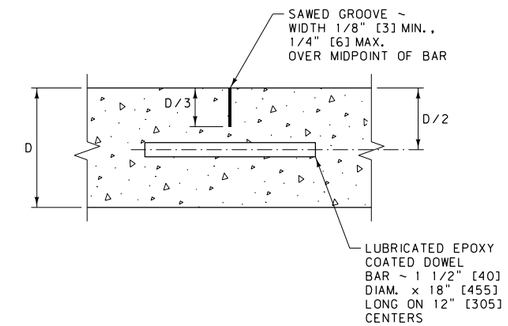

TRANSVERSE CONTRACTION JOINT

SECTION VIEW

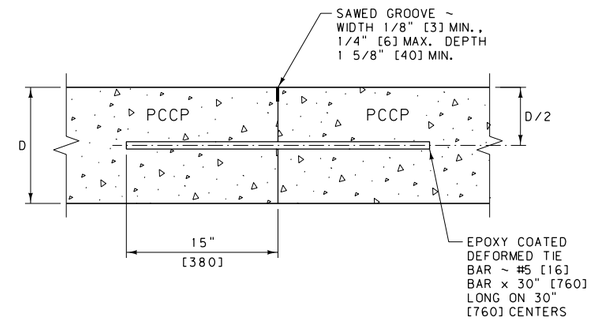

PCCP TO PCCP LONGITUDINAL CONSTRUCTION JOINT

SECTION VIEW

NOTE: SEE DTL. DWG. NO. 501-15 FOR BAR PLACEMENT WITH EXISTING PCCP

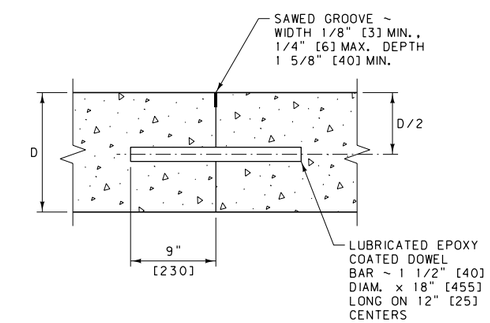

TRANSVERSE CONSTRUCTION JOINT

SECTION VIEW

NOTE: SEE DTL. DWG. NO. 501-15 FOR BAR PLACEMENT WITH EXISTING PCCP

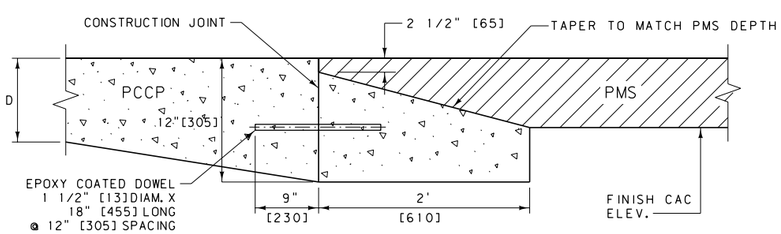

PMS TRANSVERSE TRANSITION DETAIL

ELEVATION VIEW

PCCP TO PMS LONGITUDINAL JOINT

SECTION VIEW

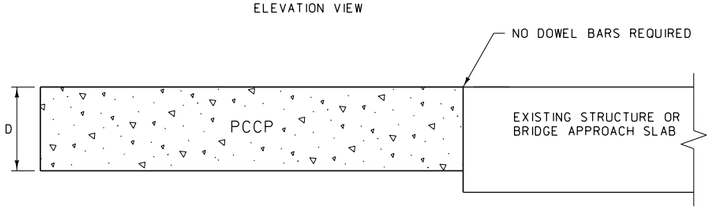

EXISTING APPROACH SLAB TRANSITION DETAIL

ELEVATION VIEW

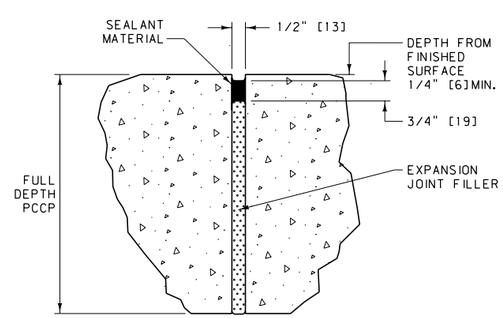

ISOLATION JOINT

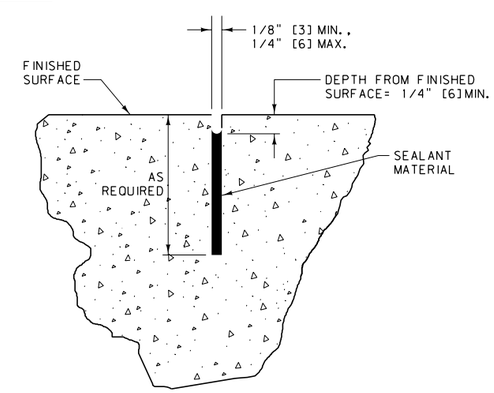

SAWED JOINT

UNITS SHOWN IN BRACKETS [] ARE METRIC AND ARE IN MILLIMETERS (mm) UNLESS OTHER UNITS ARE SHOWN.

DETAILED DRAWING	
REFERENCE STANDARD SPEC. SECTION 501	DWG. NO. 501-00
PCCP JOINTS	
EFFECTIVE: SEPTEMBER 2014	

MDT MONTANA DEPARTMENT OF TRANSPORTATION

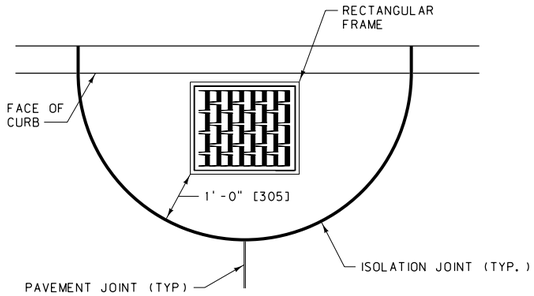

CONDITION A

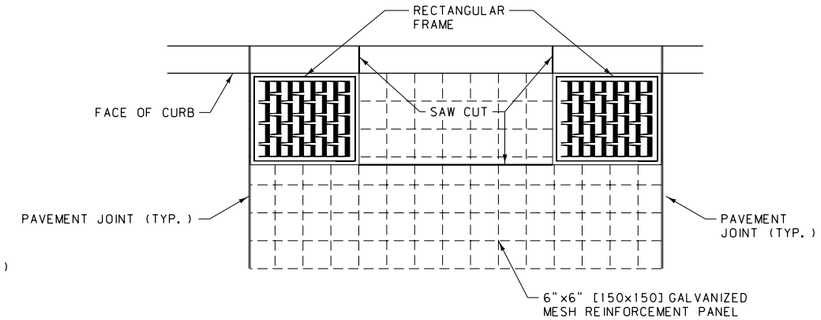

CONDITION B

NOTE: USE CONDITION B WHEN MULTIPLE INLETS ARE PRESENT IN ONE PANEL

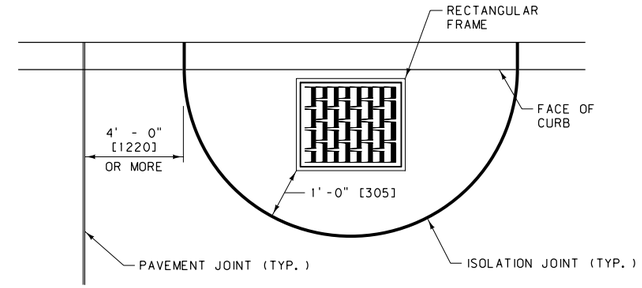

CONDITION C

(SHOULDER USE ONLY)

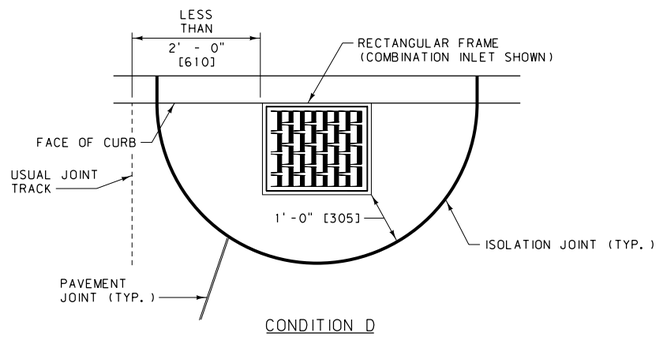

CONDITION D

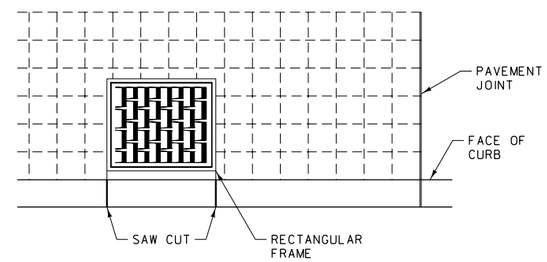

CONDITION F

NOTE: USE CONDITION F ONLY IF CONDITIONS C OR D CANNOT BE USED DUE TO INLET PLACEMENT

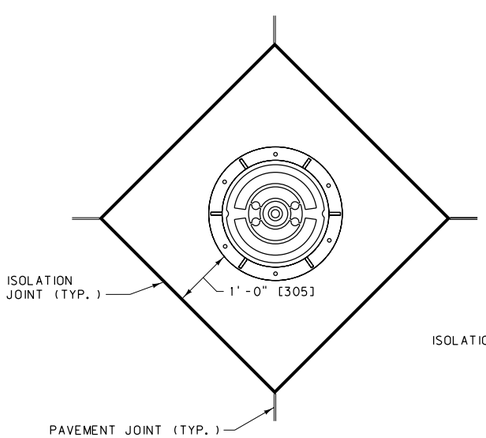

CONDITION G

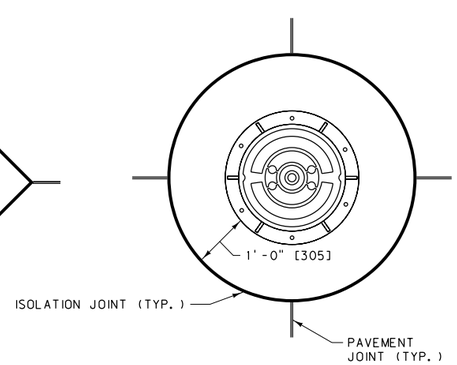

CONDITION H

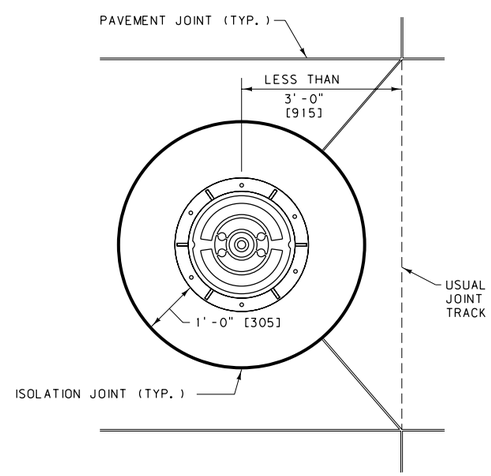

CONDITION I

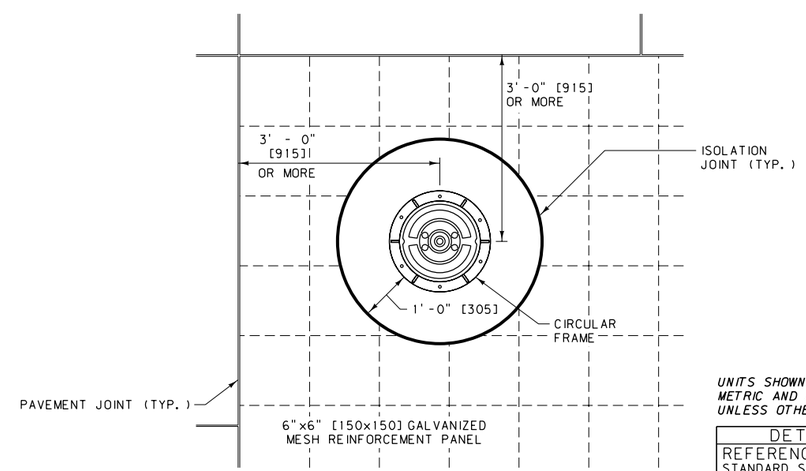

CONDITION J

UNITS SHOWN IN BRACKETS [] ARE METRIC AND ARE IN MILLIMETERS (mm) UNLESS OTHER UNITS ARE SHOWN.

DETAILED DRAWING	
REFERENCE STANDARD SPEC. SECTION 501	DWG. NO. 501-05
PCCP ISOLATION JOINTS	
EFFECTIVE: SEPTEMBER 2014	

MDT MONTANA DEPARTMENT OF TRANSPORTATION

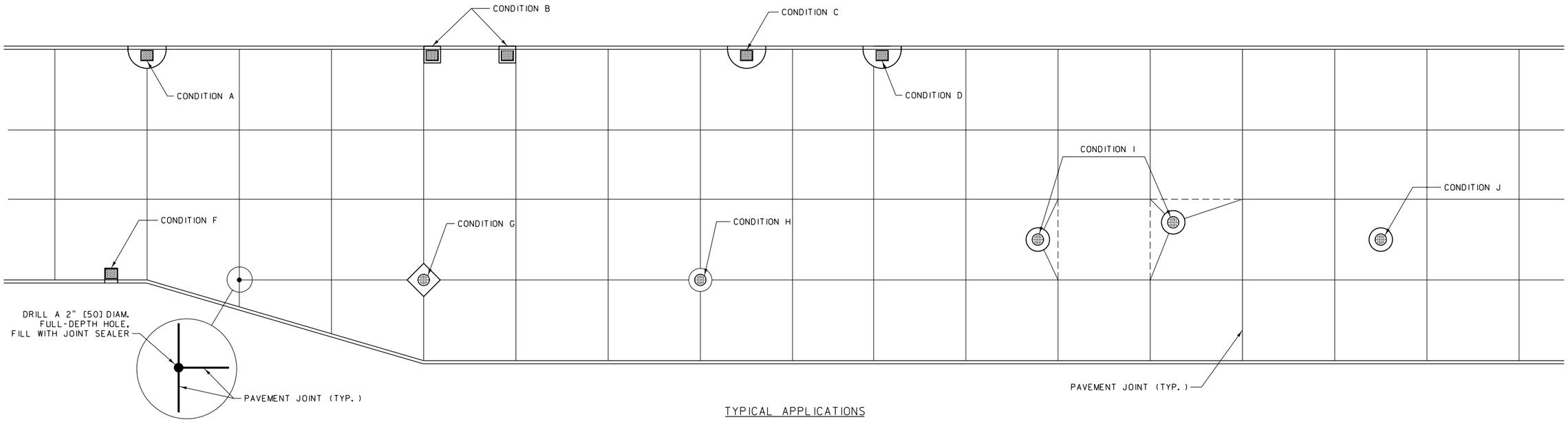

T-JOINT DETAIL

TYPICAL APPLICATIONS

TYPICAL ISOLATION JOINT GUIDELINES

CONDITION	FEATURE	DISTANCE FROM NEAREST PAVEMENT JOINT
A	DROP OR CURB INLET	-----
B	DROP OR CURB INLET	-----
C	DROP OR CURB INLET	EDGE OF ISOLATION JOINT > 4 FT [1220] FROM JOINT
D	DROP OR CURB INLET	EDGE OF INLET < 2 FT [610] FROM JOINT
F	DROP OR CURB INLET	> 4 FT [1220] FROM JOINT
G	MANHOLE	-----
H	MANHOLE	-----
I	MANHOLE	CENTER OF MANHOLE < 3 FT [915] FROM JOINT
J	MANHOLE	CENTER OF MANHOLE > 3 FT [915] FROM JOINT

UNITS SHOWN IN BRACKETS [] ARE METRIC AND ARE IN MILLIMETERS (mm) UNLESS OTHER UNITS ARE SHOWN.

DETAILED DRAWING

REFERENCE STANDARD SPEC. SECTION 501

DWG. NO. 501-10

PCCP
ISOLATION JOINTS

EFFECTIVE: SEPTEMBER 2014

MDT MONTANA DEPARTMENT OF TRANSPORTATION

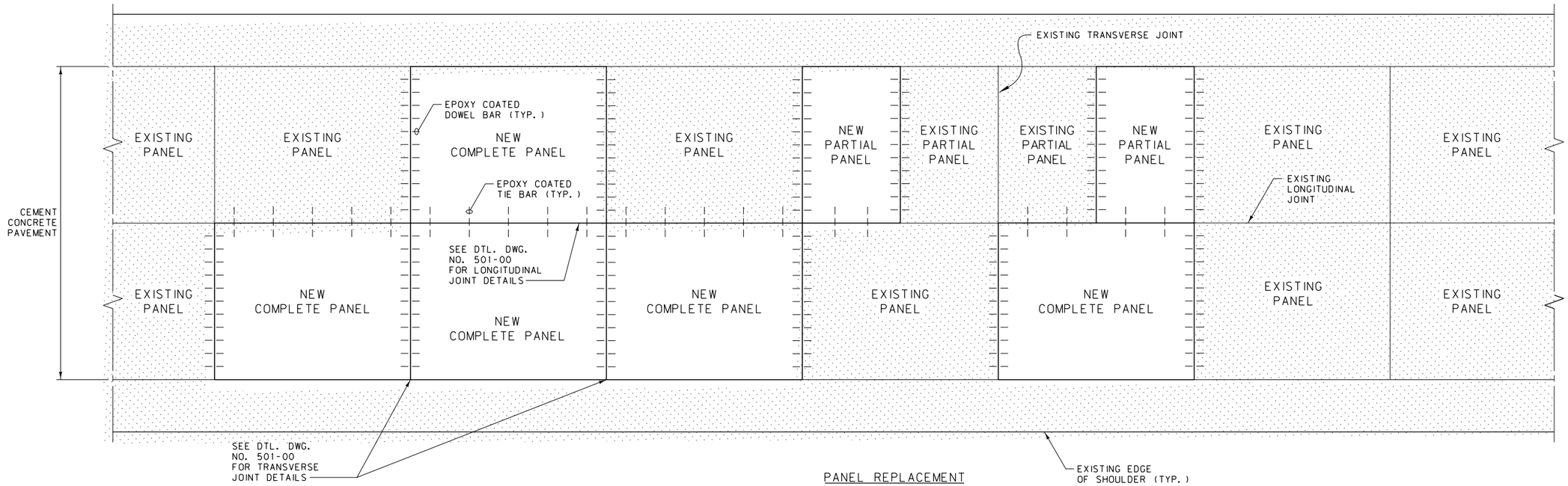

PANEL REPLACEMENT

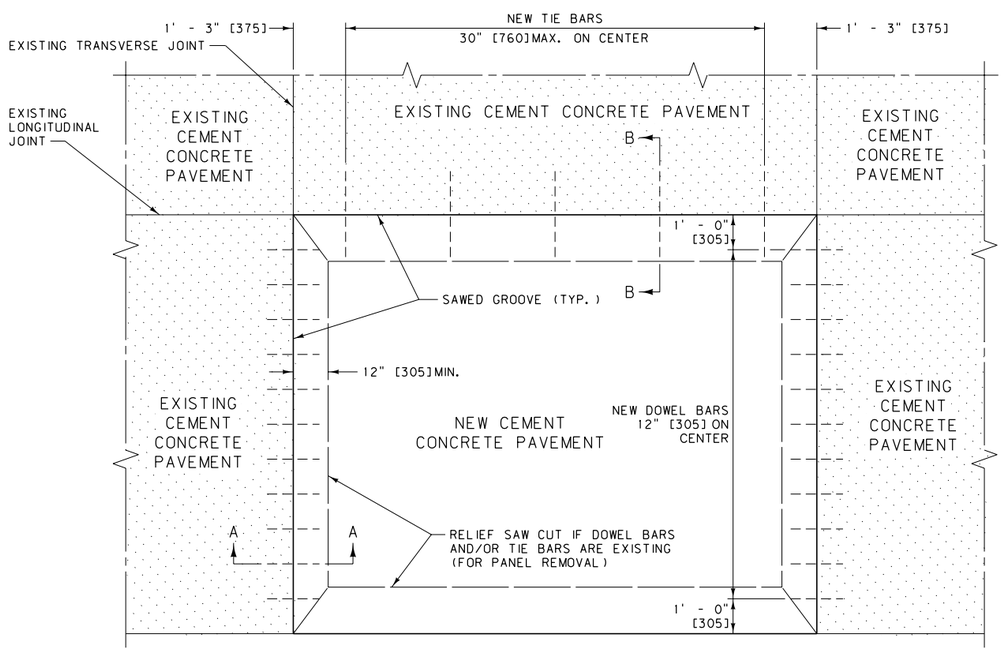

PANEL REPLACEMENT DETAIL

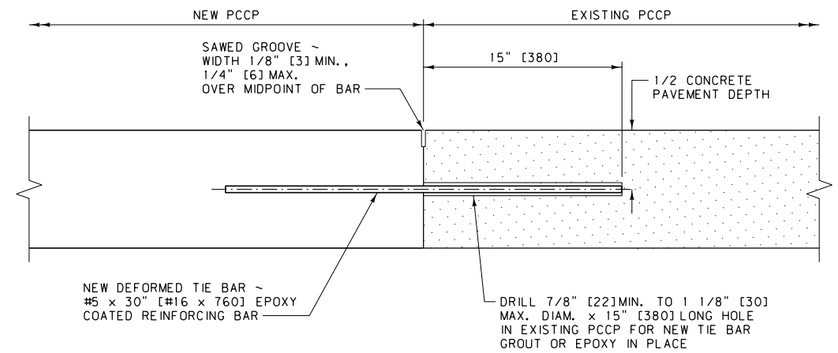

SECTION B-B

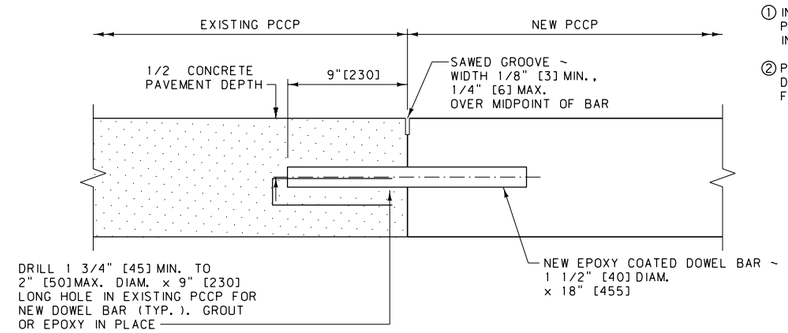

SECTION A-A

NOTES:

1. INSTALL TIE BARS ALONG LONGITUDINAL JOINTS BETWEEN PANEL REPLACEMENT AND EXISTING PCCP. TIE BARS ARE NOT INSTALLED BETWEEN PCCP PAVEMENT AND PMS SHOULDERS.
2. PLACE NEW DOWEL BARS BETWEEN EXISTING DOWEL BARS. DO NOT PLACE ANY DOWEL BARS CLOSER THAN 1'-0" [305] FROM EDGE OF CONCRETE PANEL.

UNITS SHOWN IN BRACKETS [] ARE METRIC AND ARE IN MILLIMETERS (mm) UNLESS OTHER UNITS ARE SHOWN.

DETAILED DRAWING	
REFERENCE STANDARD SPEC. SECTION 501	DWG. NO. 501-15
PCCP REPAIR	
EFFECTIVE: SEPTEMBER 2014	

MDT MONTANA DEPARTMENT OF TRANSPORTATION

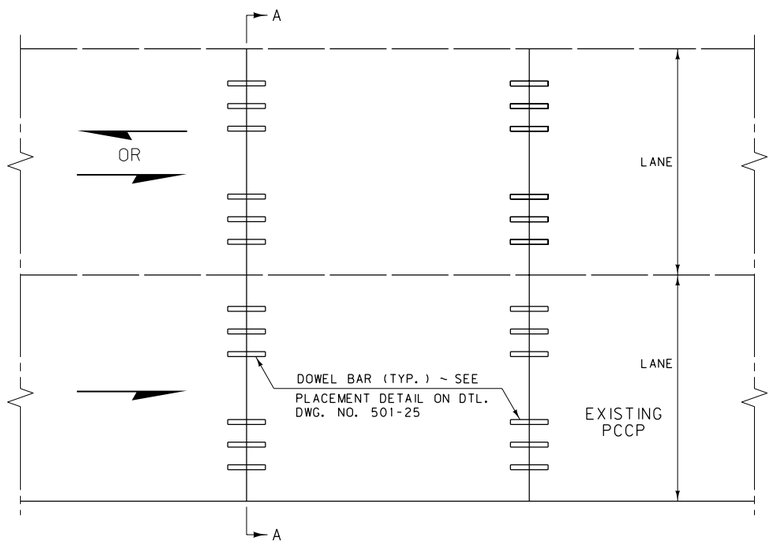

DOWEL BAR RETROFIT

FOR TWO LANE DIVIDED HIGHWAY (ONE WAY TRAFFIC)
FOR EACH LANE IN UNDIVIDED HIGHWAY (TWO WAY TRAFFIC)

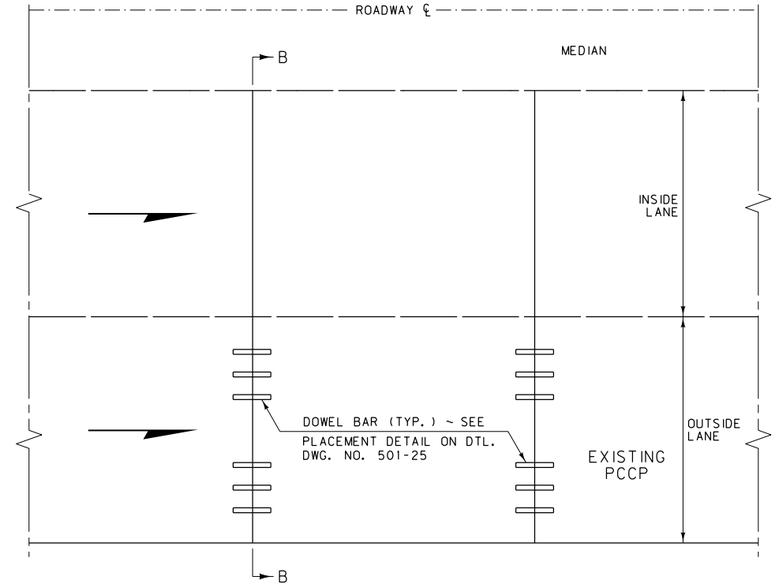

DOWEL BAR RETROFIT FOR ONE LANE

DIVIDED HIGHWAY (ONE WAY TRAFFIC)

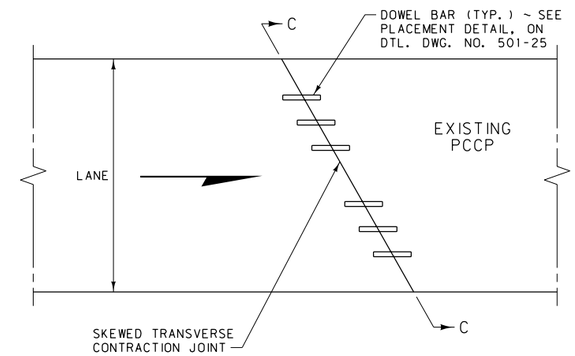

SKEWED JOINT DETAIL

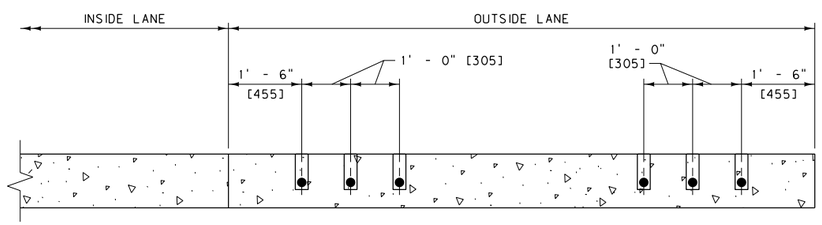

SECTION B-B

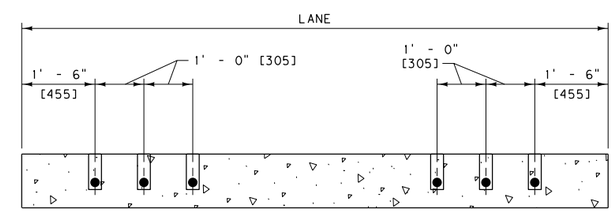

SECTION C-C

ALL DIMENSIONS PERPENDICULAR TO DIRECTION OF TRAVEL

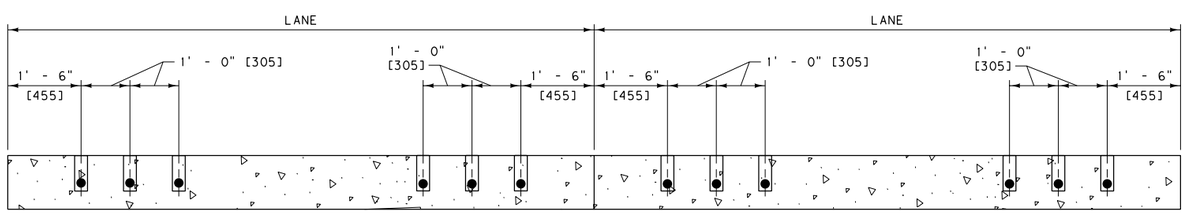

SECTION A-A

UNITS SHOWN IN BRACKETS [] ARE METRIC AND ARE IN MILLIMETERS (mm) UNLESS OTHER UNITS ARE SHOWN.

DETAILED DRAWING	
REFERENCE STANDARD SPEC. SECTION 501	DWG. NO. 501-20
DOWEL BAR RETROFIT FOR PCCP	
EFFECTIVE: SEPTEMBER 2014	
MDT MONTANA DEPARTMENT OF TRANSPORTATION	

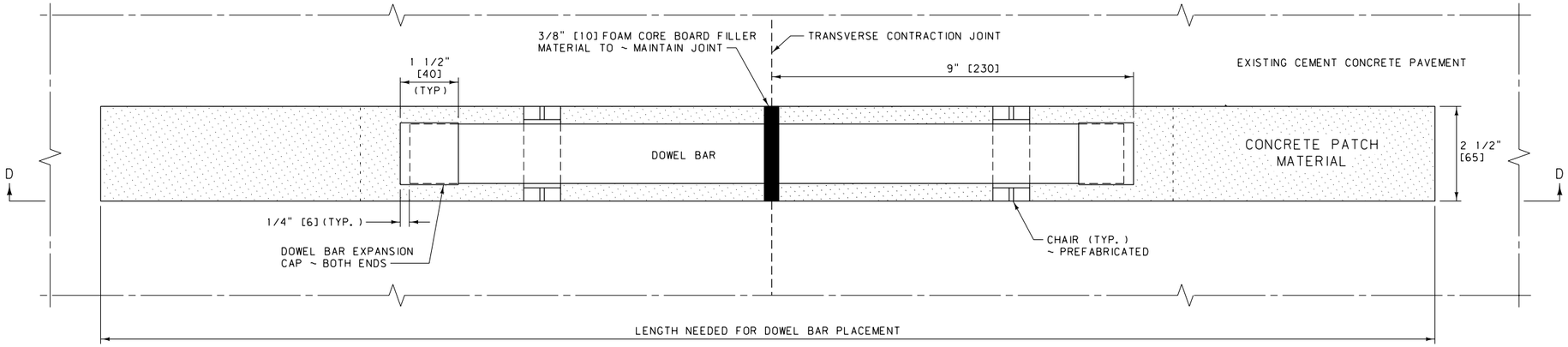

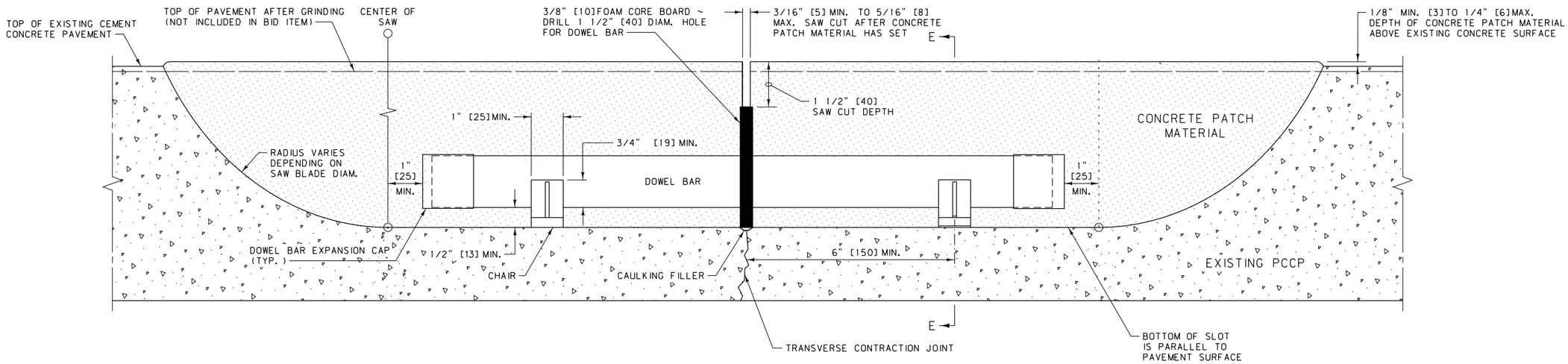

SECTION D-D
DOWEL BAR PLACEMENT DETAIL

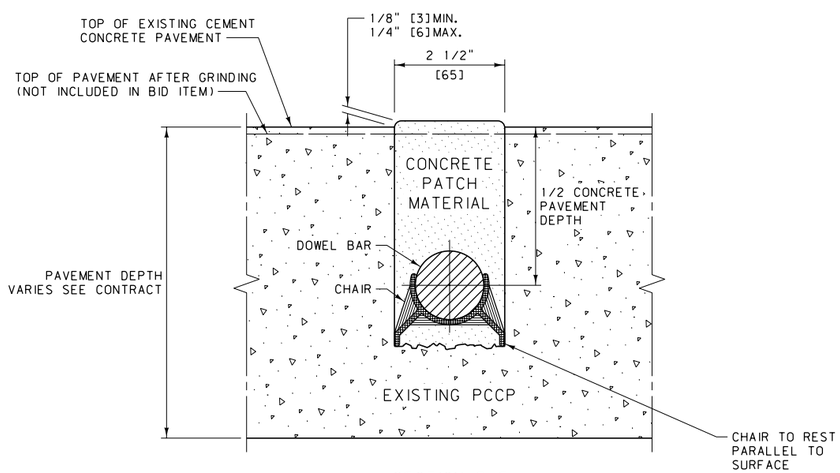

SECTION E-E

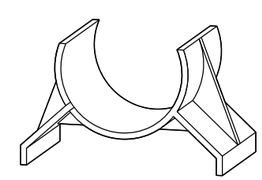

CHAIR DETAIL

NOTE: USE PLASTIC CHAIR OR AS APPROVED BY PROJECT MANAGER

UNITS SHOWN IN BRACKETS [] ARE METRIC AND ARE IN MILLIMETERS (mm) UNLESS OTHER UNITS ARE SHOWN.

DETAILED DRAWING	
REFERENCE STANDARD SPEC. SECTION 501	DWG. NO. 501-25
DOWEL BAR RETROFIT FOR PCCP	
EFFECTIVE: SEPTEMBER 2014	

MDT MONTANA DEPARTMENT OF TRANSPORTATION

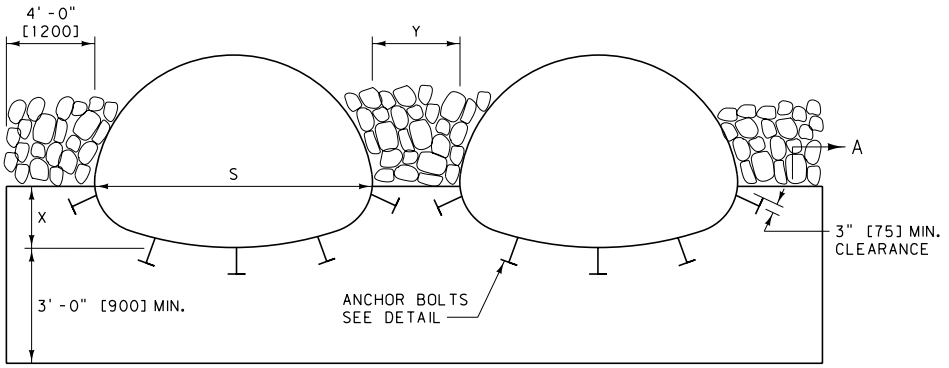

MULTIPLE ARCH CULVERTS

(METAL CULVERTS SHOWN)

X: VARIABLE (SEE DTL. DWG. NO. 603-10 FOR CONCRETE CULV. AND 603-34 FOR METAL CULV.)

Y: FOR METAL CULV. AND CULV. WITHOUT FETS: Y = 4'-0" [1200] (OUTSIDE WALL TO OUTSIDE WALL)

S: INSIDE PIPE SPAN

FOR CONCRETE CULV. WITH FETS: USE Y AS REQUIRED FOR PARALLEL PIPE INSTALLATION, PER DTL. DWG. NO. 613-08

NOTE: Y MAY BE INCREASED ON LARGE DIAMETER PIPES (UP TO A MAX. OF 8'-0" [2400]) TO AID IN INSTALLATION AND BACKFILL. THE QUANTITIES SHOWN IN 552-04, 06 & 08 WERE FIGURED USING Y = 4'-0" [1200]. ADJUST QUANTITIES AS NEEDED WHEN Y IS OTHER THAN 4'-0" [1200].

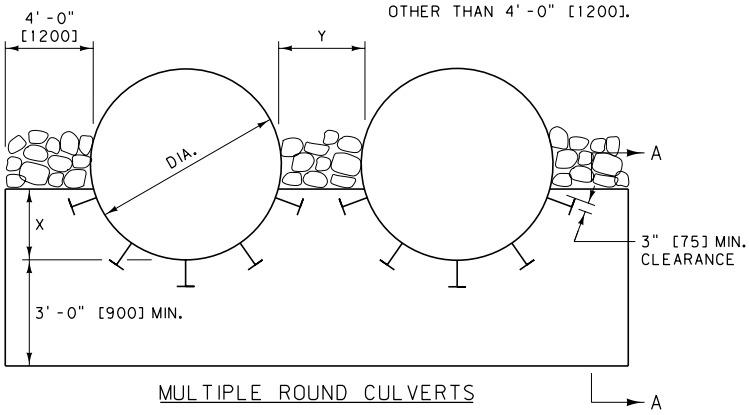

MULTIPLE ROUND CULVERTS

(METAL CULVERTS SHOWN)

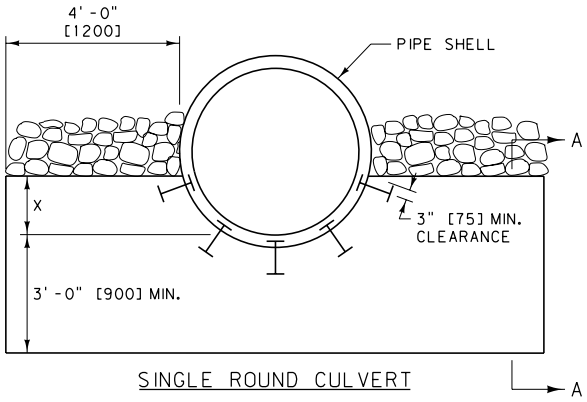

SINGLE ROUND CULVERT

(CONCRETE CULVERT SHOWN)

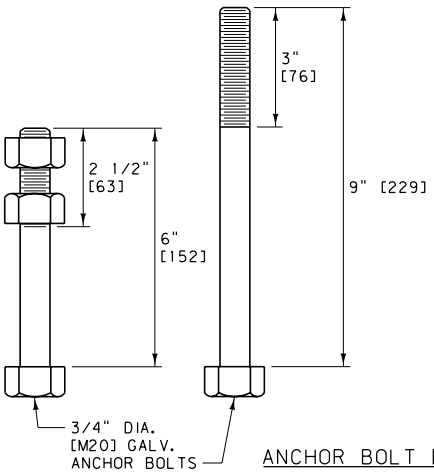

ANCHOR BOLT DETAILS

6" [152] LONG FOR METAL PIPE
9" [229] LONG FOR CONCRETE PIPE

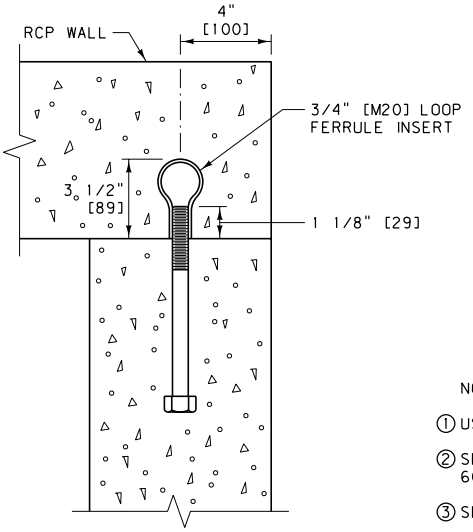

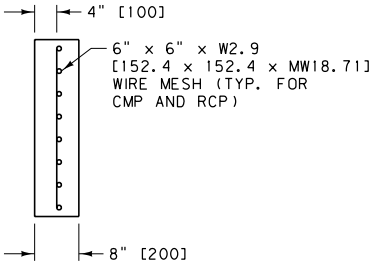

SECTION A-A

NOTES:

1. USE CLASS GENERAL CONCRETE OR EQUAL.
2. SEE DTL. DWG. NO. 603-18 AND 603-19 FOR BEDDING UNDER CULVERTS.
3. SEE DTL. DWG. NO. 613-14 FOR RIPRAP.

ANCHOR BOLT SPACING:
MIN. OF FIVE 3/4" DIA. [M20] GALV. ANCHOR BOLTS IN WALL. USE MAX. SPACING OF 1.5' [455].

REINFORCING STEEL:
USE REBAR DOWELS MEETING THE REQUIREMENTS OF AASHTO M 31 GRADE 60 (GRADE 420).

EPOXY RESIN BONDING ADHESIVE:
MEET THE REQUIREMENTS OF AASHTO M 235 TYPE 4.

UNITS SHOWN IN BRACKETS [] ARE METRIC AND ARE IN MILLIMETERS (mm) UNLESS OTHER UNITS ARE SHOWN.

DETAILED DRAWING	
REFERENCE STANDARD SPEC. SECTION 552, 603, 613	DWG. NO. 552-00
CONCRETE CUTOFF WALLS FOR CULVERTS	
EFFECTIVE: SEPTEMBER 2014	

MDT MONTANA DEPARTMENT OF TRANSPORTATION

CULVERT INSTALLATION QUANTITIES

DIAMETER OR SPAN x RISE	CUBIC YARDS OF CLASS GENERAL CONCRETE (EACH END)										CUBIC YARDS OF RIPRAP (EACH END) ① (DTL. DWG. NO. 613-14)								C. Y. BEDDING MATERIAL ② PER FOOT OF PIPE (DTL. DWG. NO. 603-19)	
	CUTOFF WALL (DTL. DWG. NO. 552-00)		CONCRETE EDGE PROTECTION (DTL. DWG. NO. 613-08)																	
			1.5:1		2:1		2.5:1		3:1		1.5:1		2:1		2.5:1		3:1			
	SING.	DBL.	SING.	DBL.	SING.	DBL.	SING.	DBL.	SING.	DBL.	SING.	DBL.	SING.	DBL.	SING.	DBL.	SING.	DBL.	SING.	DBL.
RCP (SQ. END)																				
54"	1.1	1.9	2.3	3.4	2.8	4.1	3.4	4.8	3.9	5.6	8.3	13.0	10.3	16.1	12.4	19.5	14.6	22.9	1.0	2.0
60"	1.2	2.0	2.6	3.7	3.1	4.5	3.7	5.3	4.3	6.1	8.8	13.9	11.0	17.3	13.3	20.9	15.6	24.6	1.1	2.2
66"	1.3	2.1	2.8	4.0	3.3	4.8	4.0	5.7	4.6	6.6	9.4	14.8	11.9	18.9	14.4	22.7	16.9	26.7	1.2	2.4
72"	1.3	2.2	3.0	4.3	3.6	5.2	4.3	6.2	5.0	7.2	10.2	16.1	12.6	20.0	15.2	24.1	17.9	28.3	1.3	2.6
78"	1.4	2.3	3.2	4.7	3.9	5.6	4.6	6.7	5.3	7.7	10.7	17.1	13.3	21.1	16.1	25.5	18.9	29.9	1.4	2.8
84"	1.4	2.4	3.4	5.0	4.1	6.0	4.9	7.1	5.7	8.3	11.3	18.0	14.0	22.3	16.9	26.9	19.9	31.6	1.5	3.0
90"	1.5	2.5	3.6	5.3	4.4	6.4	5.2	7.6	6.1	8.8	11.9	18.9	14.7	23.4	17.8	28.2	20.9	33.2	1.6	3.2
96"	1.6	2.6	3.8	5.6	4.7	6.8	5.5	8.1	6.4	9.4	12.5	19.8	15.5	24.6	18.6	29.6	21.9	34.9	1.7	3.4
RCPA (SQ. END)																				
65.00" x 40.00"	1.2	1.9	2.0	3.0	2.4	3.6	2.9	4.3	3.3	4.9	8.3	13.4	10.3	16.6	12.4	20.1	14.6	23.6	1.0	2.1
73.00" x 45.00"	1.2	2.0	2.2	3.3	2.7	4.0	3.2	4.7	3.7	5.4	9.0	14.6	11.1	18.1	13.4	21.8	15.8	25.7	1.1	2.3
88.00" x 54.00"	1.3	2.2	2.6	4.0	3.2	4.8	3.7	5.6	4.3	6.5	10.5	17.3	13.0	21.4	15.7	25.8	18.5	30.3	1.3	2.6
102.00" x 62.00"	1.4	2.4	3.0	4.6	3.6	5.5	4.3	6.5	5.0	7.5	11.9	19.6	14.7	24.3	17.7	29.2	20.8	34.4	1.5	2.9
115.00" x 72.00"	1.5	2.6	3.3	5.1	4.0	6.1	4.8	7.2	5.5	8.4	12.9	21.5	16.1	26.7	19.4	32.1	22.8	37.8	1.7	3.3
122.00" x 77.25"	1.6	2.7	3.6	5.5	4.3	6.6	5.1	7.8	6.0	9.1	13.8	23.0	17.1	28.5	20.7	34.3	24.3	40.4	1.7	3.5
138.00" x 87.13"	1.7	2.8	4.1	6.2	4.9	7.5	5.8	8.9	6.8	10.4	15.5	25.9	19.2	32.1	23.2	38.7	27.2	45.5	1.9	3.8
154.00" x 96.88"	1.8	3.0	4.5	7.1	5.5	8.5	6.5	10.1	7.6	11.7	17.2	29.0	21.4	36.0	25.8	43.3	30.3	50.9	2.1	4.2
168.75" x 106.50"	2.0	3.3	4.9	7.6	5.9	9.2	7.0	10.9	8.1	12.6	18.4	31.2	22.8	38.7	27.5	46.6	32.4	54.7	2.3	4.6

DIAMETER OR SPAN x RISE	CUBIC YARDS OF CLASS GENERAL CONCRETE (EACH END)							CUBIC YARDS OF RIPRAP (EACH END) ① (DTL. DWG. NO. 613-14)				SLOPE	C. Y. BEDDING MATERIAL ② PER FOOT OF PIPE (DTL. DWG. NO. 603-19)	
	CUTOFF WALL (DTL. DWG. NO. 552-00)		CONCRETE EDGE PROTECTION (DTL. DWG. NO. 613-08)											
	SING.	DBL.		SING.	DBL.				SING.	DBL.			SING.	DBL.
RCP (FETS)														
54"	1.8	3.0		2.7	4.2				12.5	21.2			2.0:1	1.0	2.0
60"	1.9	3.2		2.5	4.0				11.9	20.1			1.9:1	1.1	2.2
66"	1.9	3.2		3.0	4.6				13.2	22.5			1.7:1	1.2	2.4
72"	2.0	3.4		3.3	5.1				14.8	25.1			1.9:1	1.3	2.6
78"	2.1	3.5		3.5	5.6				15.6	26.6			1.8:1	1.4	2.7
84"	2.1	3.6		3.5	5.5				15.0	25.8			1.5:1	1.4	2.8
90"	2.3	3.9		3.6	5.8				15.9	27.4			1.5:1	1.5	3.1
RCPA (FETS)														
65.00" x 40.00"	1.7	2.9		2.9	4.6				15.3	26.0			3.0:1	1.0	2.1
73.00" x 45.00"	1.9	3.2		3.1	4.9				16.1	27.5			3.0:1	1.1	2.3
88.00" x 54.00"	2.1	3.5		2.9	4.6				14.0	24.2			2.0:1	1.3	2.6
102.00" x 62.00"	2.1	3.6		4.0	6.4				18.4	31.9			2.0:1	1.5	2.9

METRIC CULVERT INSTALLATION QUANTITIES

DIAMETER OR SPAN x RISE (mm)	CUBIC METERS OF CLASS GENERAL CONCRETE (EACH END)								CUBIC METERS OF RIPRAP (EACH END) ① (DTL. DWG. NO. 613-14)						m³ BEDDING MATERIAL ② PER METER OF PIPE (DTL. DWG. NO. 603-19)	
	CUTOFF WALL (DTL. DWG. NO. 552-00)		CONCRETE EDGE PROTECTION (DTL. DWG. NO. 613-08)													
			1.5:1		2:1		2.5:1		1.5:1		2:1		2.5:1			
	SING.	DBL.	SING.	DBL.	SING.	DBL.	SING.	DBL.	SING.	DBL.	SING.	DBL.	SING.	DBL.	SING.	DBL.
RCP (SQ. END)																
1350	1.0	1.7	1.7	2.5	2.0	3.0	~	~	6.7	10.8	8.3	13.4	~	~	2.57	5.14
1500	1.1	1.8	1.8	2.7	2.2	3.3	~	~	7.2	11.7	9.0	14.5	~	~	2.80	5.60
1650	1.2	2.0	2.0	3.0	2.4	3.6	~	~	7.7	12.6	9.8	15.9	~	~	3.03	6.06
1800	1.2	2.1	2.2	3.2	2.6	3.9	~	~	8.4	13.7	10.4	17.0	~	~	3.27	6.54
1950	1.3	2.2	2.3	3.5	2.8	4.2	~	~	9.0	14.6	11.1	18.1	~	~	3.52	7.04
2100	1.4	2.4	2.5	3.7	3.0	4.5	~	~	9.5	15.6	11.8	19.3	~	~	3.78	7.56
2250	1.4	2.5	2.6	4.0	3.2	4.8	~	~	10.1	16.5	12.5	20.5	~	~	4.04	8.08
2400	1.5	2.6	2.8	4.2	3.4	5.1	~	~	10.6	17.5	13.2	21.7	~	~	4.31	8.62
RCPA (SQ. END)																
1650 x 1015	0.9	1.5	1.6	2.5	1.9	2.9	~	~	6.7	11.0	8.3	13.6	~	~	2.60	5.20
1855 x 1145	1.0	1.6	1.8	2.7	2.1	3.3	~	~	7.3	12.0	9.0	15.0	~	~	2.84	5.68
2235 x 1370	1.1	1.8	2.1	3.3	2.6	3.9	~	~	8.6	14.5	10.7	17.9	~	~	3.27	6.54
2590 x 1575	1.1	2.0	2.5	3.8	3.0	4.6	~	~	9.8	16.6	12.2	20.5	~	~	3.66	7.32
2920 x 1830	1.3	2.2	2.7	4.3	3.3	5.2	~	~	10.8	18.3	13.3	22.7	~	~	4.15	8.30
3100 x 1960	1.3	2.2	2.9	4.6	3.6	5.6	~	~	11.5	19.6	14.3	24.4	~	~	4.33	8.66
3505 x 2215	1.4	2.4	3.4	5.3	4.1	6.4	~	~	13.1	22.4	16.2	27.8	~	~	4.81	9.62
3910 x 2460	1.5	2.6	3.8	6.1	4.6	7.4	~	~	14.7	25.3	18.2	31.4	~	~	5.31	10.62
4285 x 2705	1.6	2.8	4.0	6.4	4.9	7.8	~	~	15.4	26.7	19.1	33.1	~	~	5.73	11.46

DIAMETER OR SPAN x RISE (mm)	CUBIC METERS OF CLASS GENERAL CONCRETE (EACH END)							CUBIC METERS OF RIPRAP (EACH END) ① (DTL. DWG. NO. 613-14)				SLOPE	m³ BEDDING MATERIAL ② PER METER OF PIPE (DTL. DWG. NO. 603-19)	
	CUTOFF WALL (DTL. DWG. NO. 552-00)		CONCRETE EDGE PROTECTION (DTL. DWG. NO. 613-08)											
	SING.	DBL.		SING.	DBL.				SING.	DBL.			SING.	DBL.
RCP (FETS)														
1350	1.3	2.2		2.0	3.1				9.3	15.7			2.0:1	2.57	5.14
1500	1.4	2.4		1.9	2.9				8.8	14.9			1.9:1	2.80	5.60
1650	1.4	2.3		2.2	3.4				9.8	16.7			1.7:1	3.03	6.06
1800	1.5	2.5		2.3	3.7				10.5	17.9			1.9:1	3.27	6.54
1950	1.5	2.6		2.6	4.1				11.6	19.8			1.8:1	3.52	7.04
2100	1.6	2.7		2.7	4.2				11.7	20.1			1.5:1	3.78	7.56
2250	1.7	2.9		2.8	4.5				12.3	21.3			1.5:1	4.04	8.08
RCPA (FETS)														
1650 x 1015	1.3	2.2		2.2	3.4				11.3	19.2			3.0:1	2.60	5.20
1855 x 1145	1.4	2.3		2.3	3.6				11.9	20.4			3.0:1	2.84	5.68
2235 x 1370	1.5	2.6		2.1	3.4				10.4	18.0			2.0:1	3.27	6.54
2590 x 1575	1.6	2.8		3.1	4.9				14.1	24.4			2.0:1	2.98	5.97

NOTES:

① QUANTITIES ARE BASED ON A THICKNESS OF 2 FT. [600] AND ARE PROPORTIONED WHEN A DIFFERENT THICKNESS IS SPECIFIED.

② BEDDING QUANTITIES FOR CONCRETE PIPES ARE BASED ON BEDDING DETAILS SHOWN ON DTL. DWG. NO. 603-19 WITH A WIDTH EQUAL TO (DIAMETER OR SPAN) + 4 FT. [1200] + (2 TIMES CONCRETE SHELL THICKNESS) AND A DEPTH EQUAL TO 2 FT. [600] + (D/4 OR R/3) + (CONCRETE SHELL THICKNESS). TO COMPUTE THE TOTAL BEDDING QUANTITY MULTIPLY BY (LENGTH OF PIPE MINUS 24 FT. [7.0 m]).

UNITS SHOWN IN BRACKETS [] ARE METRIC AND ARE IN MILLIMETERS (mm) UNLESS OTHER UNITS ARE SHOWN.

DETAILED DRAWING

REFERENCE STANDARD SPEC. SECTION 552, 603, 613

DWG. NO. 552-04

CONCRETE, RIPRAP AND BEDDING MATERIAL QUANTITIES FOR SING. AND DBL. CULVERT INSTALLATION

EFFECTIVE: SEPTEMBER 2014

MDT MONTANA DEPARTMENT OF TRANSPORTATION

CULVERT INSTALLATION QUANTITIES

DIAMETER OR SPAN x RISE	CUBIC YARDS OF CLASS GENERAL CONCRETE (EACH END) ④								CUBIC YARDS OF RIPRAP (EACH END) ① ④ (DTL. DWG. NO. 613-14)						C. Y. BEDDING MATERIAL ② PER FOOT OF PIPE (DTL. DWG. NO. 603-19)	
	CUTOFF WALL (DTL. DWG. NO. 552-00)		CONCRETE EDGE PROTECTION (DTL. DWG. NO. 613-06)													
			1.5:1		2:1		2.5:1		1.5:1		2:1		2.5:1			
	SING.	DBL.	SING.	DBL.	SING.	DBL.	SING.	DBL.	SING.	DBL.	SING.	DBL.	SING.	DBL.	SING.	DBL.
SSPPA 6" x 2" CORRUGATIONS 18" CORNER RADIUS																
6'-1" x 4'-7"	1.5	2.5	1.8	2.8	2.2	3.3	2.5	3.8	7.8	12.8	9.7	15.9	11.7	19.2	1.2	2.4
6'-4" x 4'-9"	1.5	2.5	2.0	3.0	2.4	3.6	2.8	4.2	8.4	13.7	10.4	17.0	12.5	20.5	1.2	2.3
6'-9" x 4'-11"	1.6	2.7	2.0	3.0	2.3	3.6	2.7	4.2	8.4	13.8	10.4	17.1	12.5	20.7	1.3	2.5
7'-0" x 5'-1"	1.6	2.7	2.1	3.2	2.5	3.8	2.9	4.4	8.8	14.5	10.9	18.0	13.2	21.7	1.2	2.5
7'-3" x 5'-3"	1.6	2.6	2.2	3.4	2.7	4.1	3.2	4.8	9.3	15.4	11.6	19.1	14.0	23.0	1.2	2.5
7'-8" x 5'-5"	1.7	2.8	2.3	3.5	2.7	4.1	3.2	4.9	9.5	15.7	11.8	19.5	14.2	23.5	1.3	2.7
7'-11" x 5'-7"	1.7	2.8	2.4	3.6	2.8	4.3	3.3	5.1	9.8	16.2	12.2	20.1	14.7	24.3	1.3	2.6
8'-2" x 5'-9"	1.6	2.8	2.5	3.8	3.0	4.6	3.6	5.4	10.3	17.1	12.8	21.2	15.5	25.6	1.3	2.6
8'-7" x 5'-11"	1.7	2.9	2.5	3.9	3.1	4.7	3.6	5.5	10.5	17.5	13.0	21.7	15.7	26.1	1.4	2.8
8'-10" x 6'-1"	1.7	2.9	2.7	4.1	3.2	4.9	3.8	5.8	10.9	18.2	13.6	22.5	16.3	27.2	1.4	2.8
9'-4" x 6'-3"	1.8	3.1	2.7	4.1	3.2	5.0	3.8	5.8	11.0	18.4	13.6	22.8	16.4	27.5	1.5	3.0
9'-6" x 6'-5"	1.8	3.1	2.8	4.4	3.4	5.2	4.0	6.2	11.5	19.3	14.3	23.9	17.2	28.8	1.5	2.9
9'-9" x 6'-7"	1.8	3.1	3.0	4.5	3.6	5.5	4.2	6.4	11.9	20.0	14.8	24.7	17.9	29.8	1.4	2.9
10'-3" x 6'-9"	1.9	3.2	3.0	4.7	3.6	5.6	4.3	6.6	12.2	20.4	15.1	25.3	18.2	30.5	1.6	3.1
10'-8" x 6'-11"	2.0	3.5	3.0	4.7	3.6	5.6	4.2	6.6	12.1	20.4	15.0	25.3	18.1	30.6	1.7	3.4
10'-11" x 7'-1"	2.0	3.4	3.1	4.9	3.8	5.9	4.5	6.9	12.7	21.3	15.7	26.5	19.0	31.9	1.7	3.3
11'-5" x 7'-3"	2.1	3.6	3.2	5.0	3.8	6.0	4.5	7.0	12.9	21.8	16.0	27.0	19.3	32.6	1.8	3.6
11'-7" x 7'-5"	2.1	3.6	3.3	5.2	4.0	6.2	4.7	7.3	13.3	22.5	16.5	28.0	19.9	33.7	1.7	3.5
11'-10" x 7'-7"	2.0	3.5	3.5	5.4	4.2	6.5	5.0	7.7	13.9	23.5	17.2	29.1	20.8	35.1	1.7	3.4
12'-4" x 7'-9"	2.2	3.8	3.5	5.5	4.2	6.6	5.0	7.8	14.0	23.7	17.3	29.4	20.9	35.5	1.8	3.7
12'-6" x 7'-11"	2.1	3.7	3.6	5.7	4.4	6.8	5.2	8.1	14.4	24.5	17.9	30.4	21.6	36.6	1.8	3.6
12'-8" x 8'-1"	2.1	3.7	3.8	5.9	4.6	7.1	5.4	8.4	15.0	25.4	18.6	31.5	22.4	37.9	1.8	3.6
12'-10" x 8'-4"	2.1	3.6	3.9	6.1	4.8	7.4	5.6	8.7	15.5	26.3	19.3	32.6	23.2	39.2	1.7	3.5
13'-5" x 8'-5"	2.2	3.9	3.9	6.2	4.7	7.4	5.6	8.8	15.5	26.4	19.3	32.8	23.2	39.5	1.9	3.8
13'-11" x 8'-7"	2.3	4.1	4.0	6.3	4.8	7.6	5.7	9.0	15.8	27.0	19.6	33.5	23.6	40.4	2.0	4.0
14'-1" x 8'-9"	2.3	4.0	4.1	6.5	5.0	7.8	5.9	9.2	16.3	27.7	20.2	34.4	24.3	41.5	2.0	4.0
14'-3" x 8'-11"	2.3	4.0	4.3	6.7	5.2	8.1	6.1	9.6	16.8	28.6	20.9	35.5	25.1	42.8	1.9	3.9
14'-10" x 9'-1"	2.4	4.2	4.3	6.8	5.2	8.2	6.2	9.7	17.0	29.0	21.0	36.0	25.4	43.4	2.1	4.2
15'-4" x 9'-2"	2.5	4.5	4.3	6.9	5.2	8.3	6.2	9.8	17.1	29.4	21.2	36.4	25.6	43.9	2.2	4.5
15'-6" x 9'-5"	2.5	4.4	4.5	7.2	5.4	8.6	6.4	10.2	17.7	30.4	22.0	37.7	26.5	45.4	2.2	4.4
15'-8" x 9'-7"	2.4	4.3	4.7	7.4	5.6	8.9	6.7	10.6	18.3	31.3	22.7	38.8	27.3	46.8	2.2	4.3
15'-10" x 9'-9"	2.4	4.3	4.8	7.6	5.8	9.2	6.9	10.8	18.7	32.0	23.2	39.7	28.0	47.9	2.1	4.2
16'-5" x 9'-11"	2.6	4.5	4.8	7.7	5.8	9.3	6.9	11.0	18.9	32.5	23.4	40.3	28.3	48.6	2.3	4.5
16'-7" x 10'-1"	2.5	4.5	5.0	8.0	6.1	9.6	7.2	11.4	19.5	33.4	24.2	41.5	29.1	50.0	2.2	4.4
SSPPA 6" x 2" CORRUGATIONS 31" CORNER RADIUS																
13'-3" x 9'-4"	2.5	4.3	3.8	6.0	4.6	7.3	5.5	8.6	15.1	25.7	18.8	32.0	22.6	38.5	2.2	4.3
13'-6" x 9'-6"	2.5	4.3	4.0	6.2	4.8	7.5	5.6	8.9	15.6	26.5	19.3	32.9	23.3	39.7	2.1	4.3
14'-0" x 9'-8"	2.6	4.5	4.0	6.3	4.8	7.6	5.7	9.0	15.8	27.0	19.6	33.5	23.6	40.4	2.3	4.5
14'-3" x 9'-10"	2.6	4.4	4.2	6.6	5.0	8.0	6.0	9.4	16.4	28.0	20.4	34.7	24.5	41.9	2.2	4.5
14'-5" x 10'-0"	2.5	4.4	4.3	6.8	5.2	8.2	6.2	9.7	16.8	28.7	20.9	35.6	25.2	42.9	2.2	4.4
14'-11" x 10'-2"	2.7	4.6	4.3	6.9	5.2	8.3	6.2	9.8	17.0	29.1	21.1	36.1	25.4	43.5	2.3	4.7
15'-4" x 10'-4"	2.8	4.9	4.3	6.9	5.2	8.4	6.2	9.9	17.1	29.4	21.2	36.5	25.6	44.0	2.5	4.9
15'-7" x 10'-6"	2.8	4.8	4.5	7.2	5.5	8.7	6.5	10.3	17.7	30.4	22.0	37.7	26.5	45.5	2.4	4.9
15'-10" x 10'-8"	2.7	4.8	4.7	7.5	5.7	9.0	6.7	10.6	18.3	31.4	22.7	38.9	27.4	46.9	2.4	4.8
16'-3" x 10'-10"	2.9	5.0	4.7	7.5	5.7	9.0	6.7	10.7	18.3	31.6	22.8	39.2	27.4	47.3	2.5	5.1
16'-6" x 11'-0"	2.8	5.0	4.9	7.8	5.9	9.4	7.0	11.1	18.9	32.6	23.5	40.4	28.3	48.7	2.5	5.0
17'-0" x 11'-2"	3.0	5.2	4.9	7.8	5.9	9.4	7.0	11.2	19.1	32.9	23.7	40.9	28.5	49.3	2.7	5.3
17'-2" x 11'-4"	2.9	5.2	5.0	8.1	6.1	9.7	7.2	11.5	19.6	33.8	24.3	41.9	29.3	50.5	2.6	5.2
17'-5" x 11'-6"	2.9	5.1	5.2	8.3	6.3	10.0	7.5	11.9	20.2	34.8	25.0	43.2	30.2	52.0	2.6	5.2
17'-11" x 11'-8"	3.0	5.3	5.3	8.5	6.4	10.2	7.5	12.1	20.4	35.4	25.4	43.9	30.6	52.9	2.7	5.5
18'-1" x 11'-10"	3.0	5.3	5.4	8.7	6.5	10.5	7.8	12.4	20.9	36.2	26.0	44.9	31.3	54.1	2.7	5.4
18'-7" x 12'-0"	3.1	5.5	5.4	8.8	6.6	10.6	7.8	12.5	21.1	36.6	26.2	45.4	31.6	54.8	2.8	5.7
18'-9" x 12'-2"	3.1	5.5	5.6	9.0	6.8	10.9	8.1	12.9	21.7	37.6	26.9	46.7	32.5	56.3	2.8	5.6
19'-3" x 12'-4"	3.2	5.7	5.6	9.2	6.8	11.0	8.1	13.0	21.9	38.1	27.2	47.3	32.8	56.9	3.0	5.9
19'-6" x 12'-6"	3.2	5.7	5.8	9.4	7.1	11.4	8.4	13.5	22.5	39.1	28.0	48.6	33.7	58.5	2.9	5.8
19'-8" x 12'-8"	3.2	5.6	6.0	9.6	7.2	11.6	8.6	13.8	23.0	40.0	28.6	49.6	34.4	59.8	2.9	5.8
19'-11" x 12'-10"	3.1	5.6	6.1	9.9	7.4	12.0	8.8	14.2	23.6	40.9	29.3	50.8	35.3	61.2	2.8	5.7
20'-5" x 13'-0"	3.3	5.8	6.2	10.0	7.5	12.1	8.9	14.3	23.8	41.5	29.6	51.5	35.6	62.0	3.0	6.0
20'-7" x 13'-2"	3.2	5.8	6.3	10.2	7.7	12.4	9.1	14.6	24.3	42.3	30.2	52.5	36.4	63.2	3.0	5.9

METRIC CULVERT INSTALLATION QUANTITIES

DIAMETER OR SPAN x RISE (m)	CUBIC METERS OF CLASS GENERAL CONCRETE (EACH END) ④								CUBIC METERS OF RIPRAP (EACH END) ① ④ (DTL. DWG. NO. 613-14)						m^3 BEDDING MATERIAL ② PER METER OF PIPE (DTL. DWG. NO. 603-19)	
	CUTOFF WALL (DTL. DWG. NO. 552-00)		CONCRETE EDGE PROTECTION (DTL. DWG. NO. 613-06)													
			1.5:1		2:1		2.5:1		1.5:1		2:1		2.5:1			
	SING.	DBL.	SING.	DBL.	SING.	DBL.	SING.	DBL.	SING.	DBL.	SING.	DBL.	SING.	DBL.	SING.	DBL.
SSPPA 152 mm x 51 mm CORRUGATIONS 457 mm CORNER RADIUS																
1.850 x 1.400	1.0	1.7	1.5	2.2	1.8	2.6	2.1	3.1	6.1	10.0	7.6	12.5	9.2	15.0	2.64	5.28
1.930 x 1.450	1.0	1.8	1.5	2.3	1.8	2.8	2.2	3.3	6.4	10.5	8.0	13.0	9.6	15.7	2.66	5.32
2.060 x 1.500	1.1	1.9	1.6	2.4	1.9	2.9	2.2	3.4	6.6	10.8	8.3	13.6	10.0	16.4	2.83	5.66
2.130 x 1.550	1.1	1.9	1.7	2.5	2.0	3.0	2.4	3.5	6.8	11.2	8.5	14.0	10.4	17.1	2.84	5.68
2.210 x 1.600	1.1	1.9	1.7	2.6	2.1	3.1	2.5	3.7	7.1	11.7	8.8	14.5	10.7	17.5	2.85	5.70
2.340 x 1.650	1.2	2.0	1.8	2.7	2.1	3.2	2.5	3.8	7.4	12.2	9.2	15.2	11.1	18.3	3.03	6.06
2.410 x 1.700	1.2	2.0	1.9	2.8	2.2	3.4	2.6	4.0	7.6	12.5	9.5	15.8	11.5	19.0	3.03	6.06
2.490 x 1.750	1.2	2.0	1.9	2.9	2.3	3.5	2.8	4.2	7.8	12.9	9.7	16.1	11.8	19.4	3.02	6.04
2.620 x 1.800	1.2	2.1	2.0	3.0	2.4	3.6	2.8	4.3	8.1	13.5	10.1	16.7	12.2	20.2	3.22	6.44
2.690 x 1.850	1.2	2.1	2.1	3.1	2.5	3.8	2.9	4.4	8.3	13.7	10.4	17.3	12.6	20.9	3.21	6.42
2.840 x 1.910	1.3	2.2	2.1	3.2	2.5	3.9	3.0	4.6	8.6	14.3	10.6	17.8	12.8	21.4	3.43	6.86
2.900 x 1.960	1.3	2.2	2.2	3.3	2.6	4.0	3.1	4.7	8.9	14.8	11.0	18.4	13.3	22.1	3.41	6.82
2.970 x 2.010	1.3	2.2	2.3	3.5	2.7	4.2	3.2	4.9	9.1	15.1	11.4	19.0	13.7	22.9	3.37	6.74
3.120 x 2.060	1.3	2.3	2.3	3.5	2.8	4.3	3.3	5.0	9.3	15.7	11.6	19.4	14.0	23.4	3.62	7.24
3.250 x 2.110	1.4	2.4	2.3	3.6	2.8	4.4	3.3	5.2	9.5	16.0	11.8	19.8	14.2	23.9	3.85	7.70
3.330 x 2.160	1.4	2.4	2.4	3.8	2.9	4.5	3.5	5.4	9.8	16.5	12.2	20.5	14.7	24.7	3.83	7.66
3.480 x 2.210	1.5	2.6	2.5	3.8	3.0	4.6	3.5	5.5	10.0	16.8	12.4	20.9	14.9	25.2	4.08	8.16
3.530 x 2.260	1.5	2.5	2.6	4.0	3.1	4.8	3.7	5.7	10.3	17.4	12.8	21.6	15.4	26.0	4.05	8.10
3.610 x 2.310	1.4	2.5	2.7	4.1	3.2	5.0	3.8	5.9	10.6	17.9	13.2	22.2	15.9	26.8	4.01	8.02
3.760 x 2.360	1.5	2.7	2.7	4.2	3.3	5.1	3.9	6.0	10.8	18.3	13.4	22.7	16.1	27.3	4.27	8.54
3.810 x 2.410	1.5	2.6	2.8	4.3	3.4	5.2	4.0	6.2	11.1	18.8	13.8	23.4	16.6	28.1	4.24	8.48
3.860 x 2.460	1.5	2.6	2.9	4.5	3.5	5.4	4.1	6.4	11.4	19.4	14.2	24.0	17.1	28.9	4.18	8.36
3.910 x 2.540	1.5	2.6	3.0	4.6	3.6	5.6	4.3	6.6	11.8	19.9	14.6	24.7	17.6	29.7	4.12	8.24
4.090 x 2.570	1.6	2.8	3.0	4.7	3.6	5.7	4.3	6.7	12.0	20.3	14.8	25.2	17.9	30.3	4.41	8.82
SSPPA 152 mm x 51 mm CORRUGATIONS 787 mm CORNER RADIUS																
4.040 x 2.840	1.8	3.2	2.8	4.4	3.4	5.3	4.0	6.3	11.2	19.0	13.9	23.6	16.7	28.5	5.23	10.46
4.110 x 2.900	1.8	3.2	2.9	4.5	3.5	5.5	4.1	6.5	11.4	19.5	14.2	24.2	17.1	29.2	5.19	10.38
4.270 x 2.950	1.9	3.3	2.9	4.7	3.5	5.6	4.2	6.6	11.7	19.9	14.5	24.8	17.5	29.9	5.46	10.92
4.320 x 3.000	1.9	3.3	3.1	4.8	3.7	5.8	4.4	6.9	12.1	20.7	15.0	25.7	18.1	31.0	5.39	10.78
4.390 x 3.050	1.9	3.3	3.2	5.0	3.8	6.0	4.5	7.1	12.4	21.2	15.4	26.3	18.6	31.8	5.34	10.68
4.550 x 3.100	2.0	3.4	3.2	5.0	3.8	6.1	4.6	7.2	12.5	21.5	15.6	26.7	18.8	32.2	5.66	11.32
4.670 x 3.150	2.1	3.6	3.2	5.1	3.9	6.1	4.6	7.3	12.6	21.7	15.7	27.0	18.9	32.6	5.98	11.96
4.750 x 3.200	2.0	3.6	3.3	5.3	4.0	6.4	4.8	7.6	13.1	22.5	16.3	27.9	19.6	33.7	5.90	11.80
4.830 x 3.250	2.0	3.5	3.5	5.5	4.2	6.6	5.0	7.8	13.5	23.2	16.8	28.8	20.3	34.7	5.82	11.64
4.950 x 3.300	2.1	3.7	3.4	5.5	4.2	6.6	4.9	7.9	13.6	23.4	16.8	29.0	20.3	35.0	6.19	12.38
5.030 x 3.350	2.1	3.7	3.6	5.7	4.3	6.9	5.1	8.2	14.0	24.1	17.4	29.9	21.0	36.1	6.10	12.20
5.180 x 3.400	2.2	3.8	3.6	5.8	4.3	6.9	5.1	8.2	14.1	24.4	17.5	30.3	21.1	36.5	6.45	12.90
5.230 x 3.450	2.2	3.8	3.7	5.9	4.5	7.1	5.3	8.5	14.5	25.0	18.0	31.0	21.7	37.4	6.40	12.80
5.310 x 3.510	2.1	3.8	3.8	6.1	4.6	7.4	5.5	8.8	14.9	25.7	18.5	32.0	22.3	38.5	6.30	12.60
5.460 x 3.560	2.2	3.9	3.9	6.2	4.7	7.5	5.6	8.9	15.1	26.2	18.8	32.5	22.6	39.2	6.62	13.24
5.510 x 3.610	2.2	3.9	4.0	6.4	4.8	7.7	5.7	9.1	15.5	26.8	19.2	33.3	23.2	40.2	6.55	13.10
5.660 x 3.660	2.3	4.1	4.0	6.5	4.8	7.8	5.7	9.2	15.6	27.1	19.4	33.7	23.4	40.6	6.92	13.84
5.720 x 3.710	2.3	4.1	4.1	6.6	5.0	8.0	5.9	9.5	16.1	27.9	19.9	34.6	24.0	41.7	6.82	13.64
5.870 x 3.760	2.4	4.2	4.2	6.7	5.0	8.1	6.0	9.6	16.2	28.2	20.1	35.0	24.3	42.2	7.19	14.38
5.940 x 3.810	2.4	4.2	4.3	6.9	5.2	8.4	6.2	9.9	16.7	29.0	20.7	36.0	25.0	43.4	7.09	14.18
5.990 x 3.860	2.3	4.2	4.4	7.1	5.3	8.6	6.3	10.2	17.0	29.6	21.2	36.8	25.5	44.3	7.02	14.04
6.070 x 3.910	2.3	4.1	4.5	7.3	5.5	8.8	6.5	10.5	17.5	30.3	21.7	37.6	26.2	45.4	6.90	13.80
6.220 x 3.960	2.4	4.3	4.6	7.4	5.5	8.9	6.6	10.6	17.6	30.7	21.9	38.2	26.4	46.0	7.29	14.58
6.270 x 4.010	2.4	4.3	4.7	7.5	5.7	9.1	6.7	10.8	18.0	31.3	22.4	38.9	27.0	46.9	7.20	14.40

NOTES:

① QUANTITIES ARE BASED ON A THICKNESS OF 2 FT. [600] AND ARE PROPORTIONED WHEN A DIFFERENT THICKNESS IS SPECIFIED.

② BEDDING QUANTITIES FOR METAL PIPES ARE BASED ON BEDDING DETAILS SHOWN ON DTL. DWG. NO. 603-19 WITH A WIDTH EQUAL TO (DIAMETER OR SPAN) + 4 FT. [1200] + (2 TIMES CORRUGATION WIDTH) AND A DEPTH EQUAL TO 2 FT. [600] + "X" + (CORRUGATION WIDTH). TO COMPUTE THE TOTAL BEDDING QUANTITY MULTIPLY BY (LENGTH OF PIPE MINUS 24 FT. [7.0 m]).

③ SEE DTL. DWG. NO. 603-32 AND 603-34 FOR "X" DIMENSIONS OF METAL PIPES.

④ FOR PIPES WITH SKEW BEVEL ENDS - DIVIDE THE QUANTITIES SHOWN BY COSINE OF SKEW ANGLE.

UNITS SHOWN IN BRACKETS [] ARE METRIC AND ARE IN MILLIMETERS (mm) UNLESS OTHER UNITS ARE SHOWN.

DETAILED DRAWING	
REFERENCE STANDARD SPEC. SECTION 552, 603, 613	DWG. NO. 552-06

CONCRETE, RIPRAP AND BEDDING MATERIAL QUANTIES FOR SING. AND DBL. CULVERT INSTALLATION

EFFECTIVE: SEPTEMBER 2014

MDT MONTANA DEPARTMENT OF TRANSPORTATION

CULVERT INSTALLATION QUANTITIES

DIAMETER OR SPAN x RISE	CUBIC YARDS OF CLASS GENERAL CONCRETE (EACH END) ④								CUBIC YARDS OF RIPRAP (EACH END) ① ④ (DTL. DWG. NO. 613-14)						C. Y. BEDDING MATERIAL ② PER FOOT OF PIPE (DTL. DWG. NO. 603-19)	
	CUTOFF WALL (DTL. DWG. NO. 552-00)		CONCRETE EDGE PROTECTION (DTL. DWG. NO. 613-06)													
			1.5:1		2:1		2.5:1		1.5:1		2:1		2.5:1			
	SING.	DBL.	SING.	DBL.	SING.	DBL.	SING.	DBL.	SING.	DBL.	SING.	DBL.	SING.	DBL.	SING.	DBL.
CSP 3" x 1" OR 5" x 1" CORRUGATIONS																
54"	1.2	2.0	2.1	3.0	2.5	3.6	2.9	4.3	8.3	13.3	10.3	16.5	12.5	20.1	0.9	1.8
60"	1.3	2.1	2.2	3.3	2.7	4.0	3.2	4.7	8.9	14.3	11.1	17.8	13.4	21.6	1.0	2.0
66"	1.3	2.2	2.4	3.6	2.9	4.3	3.5	5.1	9.6	15.4	11.9	19.1	14.3	23.1	1.0	2.1
72"	1.4	2.4	2.6	3.9	3.2	4.6	3.7	5.5	10.2	16.4	12.7	20.4	15.2	24.6	1.1	2.3
78"	1.5	2.5	2.8	4.1	3.4	5.0	4.0	5.9	10.8	17.5	13.4	21.7	16.2	26.2	1.2	2.4
84"	1.6	2.7	3.0	4.4	3.6	5.3	4.3	6.3	11.5	18.6	14.2	23.1	17.1	27.7	1.3	2.6
90"	1.6	2.8	3.2	4.7	3.8	5.7	4.6	6.7	12.1	19.7	15.3	24.9	18.0	29.3	1.4	2.7
96"	1.7	3.0	3.4	5.0	4.1	6.1	4.8	7.2	13.0	21.2	16.1	26.3	19.0	30.9	1.5	2.9
102"	1.8	3.1	3.6	5.3	4.3	6.4	5.1	7.6	13.6	22.3	16.9	27.7	19.9	32.5	1.5	3.1
108"	1.9	3.3	3.8	5.6	4.6	6.8	5.4	8.1	14.3	23.5	17.8	29.1	20.9	34.2	1.6	3.3
114"	2.0	3.4	4.0	6.0	4.8	7.2	5.7	8.5	15.0	24.6	18.6	30.6	21.9	35.9	1.7	3.4
120"	2.1	3.6	4.2	6.3	5.1	7.6	6.0	9.0	15.7	25.8	19.5	32.0	22.9	37.6	1.8	3.6
SSPP 6" x 2" CORRUGATIONS																
10'-6"	2.1	3.7	4.4	6.6	5.3	8.0	6.3	9.5	16.4	27.0	20.3	33.5	23.8	39.0	1.9	3.8
11'-0"	2.2	3.9	4.6	6.9	5.6	8.4	6.6	10.0	17.1	28.2	21.2	35.0	24.8	40.7	2.0	4.0
11'-6"	2.3	4.0	4.8	7.2	5.8	8.8	6.9	10.4	17.8	29.5	22.1	36.5	25.8	42.5	2.1	4.2
12'-0"	2.4	4.2	5.0	7.6	6.1	9.2	7.3	10.9	18.5	30.7	23.0	38.1	26.9	44.3	2.2	4.4
12'-6"	2.5	4.4	5.2	7.9	6.3	9.6	7.6	11.4	19.3	32.0	23.9	39.7	28.0	46.2	2.3	4.6
13'-0"	2.6	4.6	5.4	8.2	6.6	10.0	7.9	11.9	20.0	33.3	24.8	41.2	29.0	48.0	2.4	4.8
13'-6"	2.7	4.7	5.6	8.6	6.9	10.4	8.2	12.4	20.8	34.6	25.7	42.8	30.1	49.9	2.5	5.0
14'-0"	2.8	4.9	5.9	8.9	7.1	10.8	8.5	12.9	21.5	35.9	26.7	44.5	31.2	51.8	2.6	5.2
14'-6"	2.9	5.1	6.1	9.3	7.4	11.3	8.8	13.4	22.3	37.2	27.6	46.1	32.3	53.8	2.7	5.4
15'-0"	3.0	5.3	6.3	9.6	7.7	11.7	9.2	13.9	23.0	38.5	28.6	47.8	33.5	55.7	2.8	5.7
15'-6"	3.1	5.4	6.5	10.0	7.9	12.1	9.5	14.5	23.8	39.9	29.5	49.5	34.6	57.7	2.9	5.9
16'-0"	3.2	5.6	6.7	10.4	8.2	12.6	9.8	15.0	24.6	41.3	30.5	51.2	35.8	59.7	3.0	6.1
16'-6"	3.3	5.8	7.0	10.7	8.5	13.0	10.1	15.5	25.4	42.7	31.5	52.9	36.9	61.7	3.2	6.3
17'-0"	3.4	6.0	7.2	11.1	8.8	13.5	10.5	16.1	26.2	44.1	32.5	54.7	38.1	63.8	3.3	6.6
17'-6"	3.5	6.2	7.4	11.5	9.1	13.9	10.8	16.6	27.0	45.5	33.5	56.4	39.3	65.8	3.4	6.8
18'-0"	3.6	6.4	7.7	11.9	9.3	14.4	11.2	17.2	27.8	46.9	34.5	58.2	40.5	67.9	3.5	7.0
19'-0"	3.8	6.8	8.1	12.6	9.9	15.3	11.9	18.3	29.5	49.9	36.6	61.8	42.9	72.2	3.8	7.5
20'-0"	4.0	7.2	8.6	13.4	10.5	16.3	12.6	19.4	31.2	52.9	38.7	65.6	45.4	76.6	4.0	8.0
21'-0"	4.2	7.6	9.1	14.2	11.1	17.3	13.3	20.6	32.9	55.9	40.8	69.3	47.9	81.0	4.3	8.6
CSPA 2 2/3" x 1/2" CORRUGATIONS																
64" x 43"	1.3	2.1	1.7	2.6	2.0	3.1	2.4	3.6	7.4	12.0	9.2	15.0	11.1	18.1	0.9	1.9
71" x 47"	1.3	2.2	1.8	2.8	2.2	3.3	2.6	3.8	7.9	12.8	9.8	16.0	11.7	19.1	1.0	2.1
77" x 52"	1.4	2.3	2.0	3.0	2.4	3.6	2.8	4.2	8.4	13.7	10.4	17.0	12.4	20.3	1.1	2.2
83" x 57"	1.5	2.5	2.1	3.2	2.6	3.9	3.0	4.5	8.9	14.6	11.0	18.1	13.1	21.5	1.2	2.4
CSPA 3" x 1" CORRUGATIONS																
60" x 46"	1.3	2.2	1.7	2.5	2.0	3.0	2.3	3.5	7.2	11.7	9.0	14.5	10.6	17.1	1.0	2.0
66" x 51"	1.4	2.3	1.8	2.8	2.2	3.3	2.6	3.8	7.7	12.6	9.8	15.9	11.3	18.2	1.1	2.2
73" x 55"	1.5	2.5	2.0	2.9	2.3	3.5	2.7	4.1	8.3	13.5	10.3	16.8	11.8	19.2	1.2	2.5
81" x 59"	1.5	2.5	2.2	3.3	2.6	3.9	3.0	4.5	9.1	14.8	11.2	18.4	12.9	21.0	1.2	2.4
87" x 63"	1.6	2.7	2.3	3.5	2.8	4.2	3.2	4.9	9.6	15.7	11.9	19.5	13.6	22.2	1.3	2.6
95" x 67"	1.7	2.9	2.4	3.7	2.9	4.5	3.4	5.2	10.0	16.6	12.5	20.6	14.2	23.3	1.4	2.8
103" x 71"	1.8	3.0	2.6	4.0	3.1	4.7	3.6	5.5	10.6	17.5	13.1	21.7	14.9	24.5	1.5	3.0
112" x 75"	1.9	3.2	2.7	4.2	3.3	5.0	3.8	5.8	11.1	18.5	13.8	22.9	15.6	25.7	1.6	3.2
117" x 79"	2.0	3.4	2.9	4.4	3.4	5.3	4.0	6.2	11.6	19.4	14.4	24.1	16.3	26.9	1.7	3.5
128" x 83"	2.1	3.5	3.0	4.7	3.6	5.6	4.2	6.5	12.1	20.3	15.1	25.2	16.9	28.0	1.8	3.7
137" x 87"	2.2	3.7	3.2	4.9	3.8	5.9	4.4	6.9	12.7	21.3	15.7	26.5	17.6	29.3	2.0	3.9
142" x 91"	2.2	3.9	3.3	5.2	4.0	6.2	4.7	7.2	13.2	22.3	16.4	27.7	18.3	30.4	2.1	4.2

METRIC CULVERT INSTALLATION QUANTITIES

DIAMETER OR SPAN x RISE (mm OR m)	CUBIC METERS OF CLASS GENERAL CONCRETE (EACH END) ④								CUBIC METERS OF RIPRAP (EACH END) ① ④ (DTL. DWG. NO. 613-14)						m^3 BEDDING MATERIAL ② PER METER OF PIPE (DTL. DWG. NO. 603-19)	
	CUTOFF WALL (DTL. DWG. NO. 552-00)		CONCRETE EDGE PROTECTION (DTL. DWG. NO. 613-06)													
			1.5:1		2:1		2.5:1		1.5:1		2:1		2.5:1			
	SING.	DBL.	SING.	DBL.	SING.	DBL.	SING.	DBL.	SING.	DBL.	SING.	DBL.	SING.	DBL.	SING.	DBL.
CSP 75 mm x 25 mm OR 125 mm x 25 mm CORRUGATIONS																
1350	0.9	1.4	1.5	2.2	1.8	2.6	2.2	3.3	6.1	9.7	7.5	12.0	9.6	15.3	2.09	4.18
1500	0.9	1.5	1.6	2.4	2.0	2.9	2.4	3.6	6.5	10.4	8.1	13.0	10.3	16.5	2.27	4.54
1650	1.0	1.6	1.8	2.6	2.1	3.1	2.6	3.9	7.0	11.2	8.7	13.9	11.0	17.7	2.45	4.90
1800	1.0	1.7	1.9	2.8	2.3	3.4	2.9	4.2	7.4	12.0	9.2	14.9	11.7	18.8	2.63	5.26
1950	1.1	1.8	2.0	3.0	2.5	3.6	3.1	4.5	7.9	12.8	9.8	15.8	12.4	20.0	2.82	5.64
2100	1.1	1.9	2.2	3.2	2.6	3.9	3.3	4.8	8.4	13.6	10.4	16.8	13.1	21.2	3.01	6.02
2250	1.2	2.0	2.3	3.5	2.8	4.2	3.5	5.2	8.8	14.4	11.1	18.2	13.8	22.4	3.20	6.40
2400	1.3	2.2	2.5	3.7	3.0	4.4	3.7	5.5	9.5	15.5	11.7	19.2	14.5	23.6	3.40	6.80
2550	1.3	2.3	2.6	3.9	3.2	4.7	3.9	5.8	9.9	16.3	12.3	20.2	15.2	24.9	3.61	7.22
2700	1.4	2.4	2.7	4.1	3.3	5.0	4.1	6.2	10.4	17.1	12.9	21.2	16.0	26.2	3.82	7.64
2850	1.4	2.5	2.9	4.3	3.5	5.2	4.4	6.5	10.9	18.0	13.6	22.3	16.8	27.5	4.03	8.06
3000	1.5	2.6	3.0	4.6	3.7	5.5	4.6	6.9	11.4	18.8	14.2	23.3	17.5	28.8	4.25	8.50
SSPP 152 mm x 51 mm CORRUGATIONS																
3.205	1.6	2.7	3.3	4.9	4.0	6.0	4.8	7.3	12.2	20.1	15.1	24.9	18.2	29.8	4.52	9.04
3.360	1.6	2.9	3.4	5.2	4.2	6.3	5.1	7.6	12.7	21.0	15.8	26.1	19.0	31.2	4.75	9.50
3.515	1.7	3.0	3.6	5.4	4.3	6.6	5.3	8.0	13.3	22.0	16.5	27.2	19.8	32.5	4.99	9.98
3.670	1.8	3.1	3.7	5.7	4.5	6.9	5.5	8.3	13.8	22.9	17.1	28.4	20.6	33.9	5.23	10.46
3.825	1.8	3.2	3.9	5.9	4.7	7.2	5.8	8.7	14.4	23.9	17.8	29.6	21.4	35.3	5.48	10.96
3.980	1.9	3.4	4.1	6.2	4.9	7.5	6.0	9.1	14.9	24.8	18.5	30.8	22.2	36.7	5.73	11.46
4.135	2.0	3.5	4.2	6.4	5.1	7.8	6.3	9.5	15.5	25.8	19.2	32.0	23.0	38.2	5.99	11.98
4.290	2.1	3.6	4.4	6.7	5.3	8.1	6.5	9.9	16.1	26.8	20.0	33.3	23.9	39.6	6.25	12.50
4.445	2.1	3.8	4.6	7.0	5.5	8.5	6.7	10.3	16.7	27.8	20.7	34.5	24.7	41.1	6.52	13.04
4.600	2.2	3.9	4.7	7.2	5.8	8.8	7.0	10.6	17.3	28.9	21.4	35.8	25.6	42.6	6.79	13.58
4.755	2.3	4.0	4.9	7.5	6.0	9.1	7.2	11.0	17.8	29.9	22.1	37.1	26.5	44.1	7.06	14.12
4.910	2.3	4.2	5.1	7.8	6.2	9.5	7.5	11.5	18.4	30.9	22.9	38.4	27.3	45.6	7.34	14.68
5.065	2.4	4.3	5.2	8.1	6.4	9.8	7.8	11.9	19.0	32.0	23.6	39.7	28.2	47.2	7.63	15.26
5.220	2.5	4.5	5.4	8.4	6.6	10.1	8.0	12.3	19.7	33.1	24.4	41.0	29.1	48.8	7.92	15.84
5.375	2.6	4.6	5.6	8.6	6.8	10.5	8.3	12.7	20.3	34.2	25.2	42.4	30.0	50.3	8.21	16.42
5.530	2.7	4.8	5.8	8.9	7.0	10.8	8.5	13.1	20.9	35.3	25.9	43.7	30.9	51.9	8.51	17.02
5.685	2.7	4.9	5.9	9.2	7.2	11.2	8.8	13.5	21.5	36.4	26.7	45.1	31.9	53.6	8.82	17.64
5.840	2.8	5.1	6.1	9.5	7.5	11.6	9.1	14.0	22.2	37.5	27.5	46.5	32.8	55.2	9.13	18.26
5.995	2.9	5.2	6.3	9.8	7.7	11.9	9.3	14.4	22.8	38.6	28.3	47.9	33.8	56.9	9.44	18.88
6.150	3.0	5.4	6.5	10.1	7.9	12.3	9.6	14.9	23.5	39.8	29.1	49.3	34.7	58.5	9.76	19.52
6.305	3.1	5.5	6.7	10.4	8.1	12.7	9.9	15.3	24.1	40.9	29.9	50.8	35.7	60.2	10.08	20.16
6.460	3.1	5.7	6.9	10.7	8.4	13.0	10.1	15.7	24.8	42.1	30.7	52.2	36.6	61.9	10.41	20.82
CSPA 68 mm x 13 mm CORRUGATIONS																
1620 x 1100	0.9	1.5	1.3	1.9	1.5	2.3	1.8	2.7	5.5	8.9	6.8	11.0	8.5	13.8	2.23	4.46
1800 x 1200	1.0	1.6	1.4	2.0	1.6	2.4	2.0	2.9	5.8	9.5	7.2	11.8	9.0	14.6	2.42	4.84
1950 x 1320	1.0	1.7	1.5	2.2	1.7	2.6	2.1	3.2	6.2	10.1	7.7	12.5	9.5	15.5	2.58	5.16
2100 x 1450	1.1	1.8	1.6	2.4	1.9	2.8	2.3	3.4	6.6	10.8	8.1	13.4	10.0	16.4	2.74	5.48
CSPA 75 mm x 25 mm CORRUGATIONS																
1520 x 1170	1.0	1.6	1.2	1.9	1.5	2.2	1.8	2.7	5.3	8.6	6.6	10.7	8.1	13.1	2.38	4.76
1670 x 1300	1.0	1.7	1.4	2.0	1.6	2.4	2.0	2.9	5.8	9.4	7.2	11.7	8.6	13.9	2.59	5.18
1850 x 1400	1.1	1.8	1.4	2.2	1.7	2.6	2.1	3.1	6.1	9.9	7.5	12.3	9.1	14.7	2.81	5.62
2050 x 1500	1.1	1.9	1.6	2.4	1.9	2.9	2.3	3.5	6.6	10.9	8.2	13.5	9.9	16.0	2.86	5.72
2200 x 1620	1.2	2.0	1.7	2.6	2.0	3.1	2.5	3.7	7.0	11.6	8.7	14.4	10.4	16.9	3.07	6.14
2400 x 1720	1.2	2.1	1.8	2.7	2.2	3.3	2.6	4.0	7.4	12.2	9.2	15.2	10.9	17.8	3.27	6.54
2600 x 1820	1.3	2.2	1.9	2.9	2.3	3.5	2.8	4.2	7.8	12.9	9.7	16.1	11.4	18.7	3.50	7.00
2840 x 1920	1.4	2.4	2.0	3.1	2.4	3.7	2.9	4.5	8.2	13.6	10.1	16.9	11.9	19.6	3.72	7.44
2970 x 2020	1.5	2.5	2.1	3.3	2.5	3.9	3.1	4.7	8.6	14.3	10.6	17.8	12.4	20.5	3.94	7.88
3240 x 2120	1.5	2.6	2.2	3.4	2.7	4.1	3.2	5.0	9.0	15.0	11.1	18.7	12.9	21.4	4.16	8.32
3470 x 2220	1.6	2.7	2.3	3.6	2.8	4.3	3.4	5.2	9.4	15.8	11.6	19.6	13.5	22.4	4.38	8.76
3600 x 2320	1.7	2.9	2.4	3.8	2.9	4.6	3.6	5.5	9.8	16.5	12.1	20.5	14.0	23.3	4.62	9.24

NOTES:

① QUANTITIES ARE BASED ON A THICKNESS OF 2 FT. [600] AND ARE PROPORTIONED WHEN A DIFFERENT THICKNESS IS SPECIFIED.

② BEDDING QUANTITIES FOR METAL PIPES ARE BASED ON BEDDING DETAILS SHOWN ON DTL. DWG. NO. 603-19 WITH A WIDTH EQUAL TO (DIAMETER OR SPAN) + 4 FT. [1200] + (2 TIMES CORRUGATION WIDTH) AND A DEPTH EQUAL TO 2 FT. [600] + "X" + (CORRUGATION WIDTH). TO COMPUTE THE TOTAL BEDDING QUANTITY MULTIPLY BY (LENGTH OF PIPE MINUS 24 FT. [7.0 m]).

③ SEE DTL. DWG. NO. 603-32 AND 603-34 FOR "X" DIMENSIONS OF METAL PIPES.

④ FOR PIPES WITH SKEW BEVEL ENDS - DIVIDE THE QUANTITIES SHOWN BY COSINE OF SKEW ANGLE.

UNITS SHOWN IN BRACKETS [] ARE METRIC AND ARE IN MILLIMETERS (mm) UNLESS OTHER UNITS ARE SHOWN.

DETAILED DRAWING	
REFERENCE STANDARD SPEC. SECTION 552, 603, 613	DWG. NO. 552-08
CONCRETE, RIPRAP AND BEDDING MATERIAL QUANTITIES FOR SING. AND DBL. CULVERT INSTALLATION	
EFFECTIVE: SEPTEMBER 2014	

MDT MONTANA DEPARTMENT OF TRANSPORTATION

ARCH PIPE

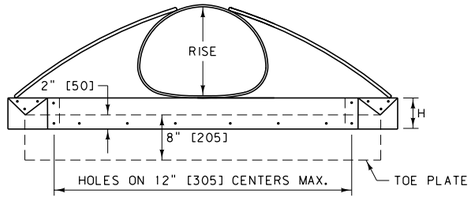

ELEVATION

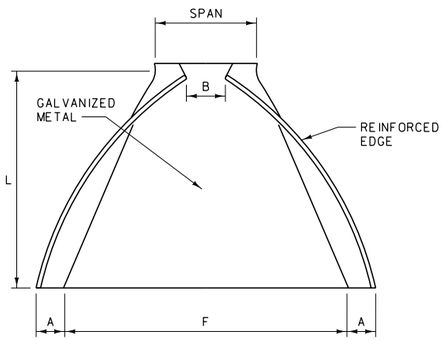

PLAN

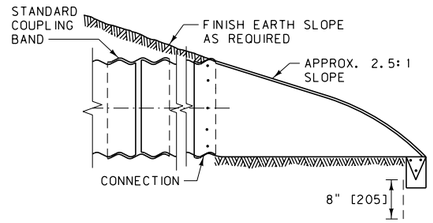

TYPICAL CROSS-SECTION

(ILLUSTRATED WITH TYPE 3 CONNECTION)

ROUND PIPE

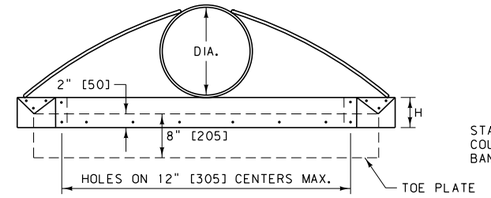

ELEVATION

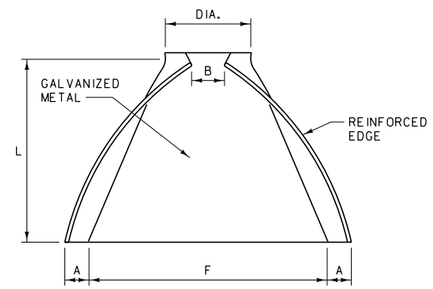

PLAN

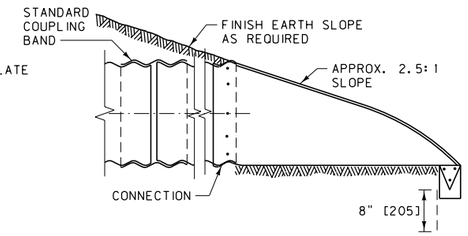

TYPICAL CROSS-SECTION

(ILLUSTRATED WITH TYPE 3 CONNECTION)

CONNECTIONS

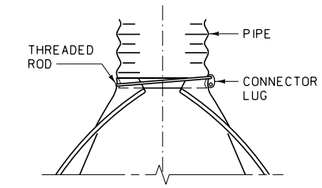

TYPE 1

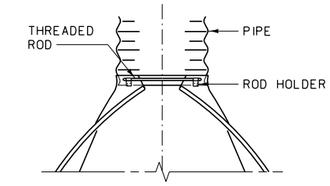

TYPE 2

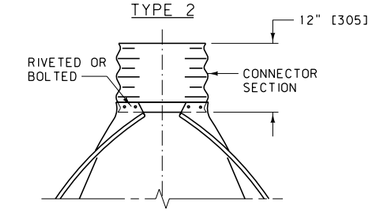

TYPE 3

DIMENSION TABLE

3" x 1" CORR. SPAN x RISE	MINIMUM THICKNESS *	2 2/3" x 1/2" CORR. SPAN x RISE	MINIMUM THICKNESS *	DIMENSIONS A 1" TOL.	B MAX.	H 1" TOL.	L 1 1/2" TOL.	F 2" TOL.	TYPE CONNECTOR
		17" x 13"	0.064"	7"	9"	6"	19"	30"	2
		21" x 15"	0.064"	7"	10"	6"	23"	30"	2
		24" x 18"	0.064"	8"	12"	6"	28"	42"	2
		28" x 20"	0.064"	9"	14"	6"	32"	48"	2
		35" x 24"	0.079"	10"	16"	6"	39"	60"	2
40" x 31"	0.079"	42" x 29"	0.079"	12"	18"	8"	46"	75"	3
46" x 36"	0.109"	49" x 33"	0.109"	13"	21"	9"	53"	85"	3
53" x 41"	0.109"	57" x 38"	0.109"	18"	26"	12"	63"	90"	3
60" x 46"	0.109"	64" x 43"	0.109"	18"	30"	12"	70"	102"	3
66" x 51"	0.109"	71" x 47"	0.109"	18"	33"	12"	77"	114"	3
73" x 55"	0.109"	77" x 52"	0.109"	18"	36"	12"	77"	126"	3
81" x 59"	0.109"	83" x 57"	0.109"	18"	36"	12"	77"	138"	3

METRIC DIMENSION TABLE

SPAN x RISE (mm)	MINIMUM THICKNESS (mm) *	DIMENSIONS (mm) A 25 TOL.	B MAX.	H 25 TOL.	L 40 TOL.	F 50 TOL.	APPROX. SLOPE	TYPE CONNECTOR
68 x 13 CORRUGATIONS								
430 x 330	1.63	130	230	150	510	710	2.13:1	2
530 x 380	1.63	150	280	150	610	860	2:1	2
610 x 460	1.63	180	300	150	710	1020	2.13:1	2
710 x 510	1.63	180	410	150	810	1170	2:1	2
885 x 610	2.01	230	410	150	990	1470	1.88:1	2
1060 x 740	2.01	280	460	180	1170	1850	1.88:1	3
1240 x 840	2.77	300	530	230	1350	2080	1.75:1	3
1440 x 970	2.77	410	660	300	1570	2240	1.88:1	3
1620 x 1100	2.77	430	760	300	1750	2540	1.88:1	3
1800 x 1200	2.77	430	910	300	1960	2840	1.88:1	3
1950 x 1320	2.77	430	910	300	1960	3150	1.63:1	3
2100 x 1450	2.77	430	1120	300	1960	3300	1.5:1	3
75 x 25 CORRUGATIONS								
1340 x 1050	2.77	430	660	300	1600	2240	1.75:1	3
1520 x 1170	2.77	430	910	300	1780	2540	1.88:1	3
1670 x 1300	2.77	430	910	300	1960	2840	1.75:1	3
1850 x 1400	2.77	430	910	300	1960	3150	1.5:1	3
2050 x 1500	2.77	430	1120	300	1960	3450	1.63:1	3

DIMENSION TABLE

PIPE DIA.	MINIMUM THICKNESS *	DIMENSIONS A 1" TOL.	B MAX.	H 1" TOL.	L 1 1/2" TOL.	F 2" TOL.	TYPE CONNECTOR
12"	0.064"	6"	6"	6"	21"	24"	1
15"	0.064"	7"	8"	6"	26"	30"	1
18"	0.064"	8"	10"	6"	31"	36"	1
21"	0.064"	9"	12"	6"	36"	42"	1
24"	0.064"	10"	13"	6"	41"	48"	1
30"	0.079"	12"	16"	8"	51"	60"	2
36"	0.079"	14"	19"	9"	60"	72"	2
42"	0.109"	16"	22"	11"	69"	84"	3
48"	0.109"	18"	27"	12"	78"	90"	3
54"	0.109"	18"	30"	12"	84"	102"	3
60"	0.109"	18"	33"	12"	87"	114"	3
66"	0.109"	18"	36"	12"	87"	120"	3
72"	0.109"	18"	39"	12"	87"	126"	3
78"	0.109"	18"	42"	12"	87"	132"	3
84"	0.109"	18"	45"	12"	87"	138"	3

METRIC DIMENSION TABLE

PIPE DIA. (mm)	MINIMUM THICKNESS (mm) *	DIMENSIONS (mm) A 25 TOL.	B MAX.	H 25 TOL.	L 40 TOL.	F 50 TOL.	APPROX. SLOPE	TYPE CONNECTOR
300	1.63	125	180	150	535	560	2.25:1	1
375	1.63	150	205	150	660	710	2.25:1	1
450	1.63	180	255	150	785	865	2.13:1	1
525	1.63	205	305	150	915	1015	2.13:1	1
600	1.63	230	330	150	1040	1170	2.13:1	1
750	2.01	280	405	205	1295	1395	2.13:1	2
900	2.01	330	485	230	1525	1780	2:1	2
1050	2.77	380	635	255	1755	2085	2.13:1	3
1200	2.77	430	735	305	1980	2235	2:1	3
1350	2.77	430	840	305	2135	2540	2:1	3
1500	2.77	430	915	305	2210	2845	1.88:1	3
1650	2.77	430	990	305	2210	2995	1.63:1	3
1800	2.77	430	1120	305	2210	3050	1.5:1	3
1950	2.77	430	1220	305	2210	3300	1.38:1	3
2100	2.77	430	1320	305	2210	3455	1.33:1	3

NOTES:

1. PROVIDE TOE PLATE WHEN SPECIFIED.
2. GALVANIZE ALL PARTS PER SECTION 711.
3. PAINT ANY AREAS WHERE GALVANIZING IS BROKEN OR METAL IS BARE WITH ONE COAT OF ZINC RICH PAINT AND TWO COATS OF ALUMINUM PAINT PER SECTION 710.
4. MINOR VARIATIONS IN DESIGN MAY BE ACCEPTABLE ON APPROVAL OF THE PROJECT MANAGER.
5. SEAMS OR JOINTS LENGTHWISE OF THE APRON ARE ACCEPTABLE IF SECURELY BOLTED OR WELDED AND PAINTED AS PROVIDED ABOVE.

* THICKNESSES SHOWN ARE FOR STEEL CULVERTS. FOR THICKNESS OF ALUMINUM, SUBTRACT 0.004" [0.10 mm].

UNITS SHOWN IN BRACKETS [] ARE METRIC AND ARE IN MILLIMETERS (mm) UNLESS OTHER UNITS ARE SHOWN.

DETAILED DRAWING

REFERENCE STANDARD SPEC. SECTION 603, 709, 710, 711 — DWG. NO. 603-02

CMP FLARED END TERMINAL SECTION (FETS)

EFFECTIVE: SEPTEMBER 2014

MDT MONTANA DEPARTMENT OF TRANSPORTATION

TYPE "A"

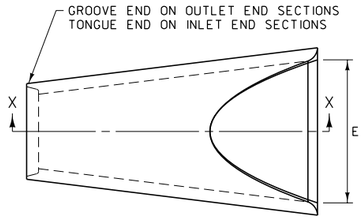

PLAN

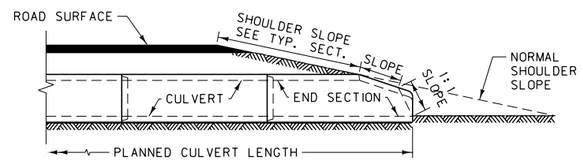

SLOPE DETAIL

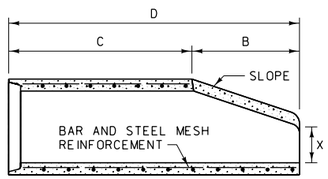

SECTION X-X

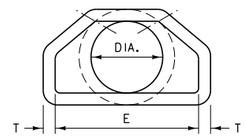

END VIEW

TYPE "A"							
DIA.	SLOPE	X	B	C	D	E	T *
12"	2.4:1	4"	2'-0"	4'-0"	6'-0"	2'-0"	2"
15"	2.4:1	6"	2'-3"	3'-9"	6'-0"	2'-6"	2 1/4"
18"	2.3:1	9"	2'-3"	3'-9"	6'-0"	3'-0"	2 1/2"
24"	2.5:1	9 1/2"	3'-7 1/2"	2'-4 1/2"	6'-0"	4'-0"	3"
30"	2.5:1	1'-0"	4'-6"	1'-6"	6'-0"	5'-0"	3 1/2"
36"	2.5:1	1'-3"	5'-3"	2'-11"	8'-2"	6'-0"	4"
42"	2.5:1	1'-9"	5'-3"	2'-11"	8'-2"	6'-6"	4 1/2"
48"	2.5:1	2'-0"	6'-0"	2'-2"	8'-2"	7'-0"	5"
54"	2.0:1	2'-3"	5'-5"	2'-9 1/2"	8'-2 1/2"	7'-6"	5 1/2"

* WALL "B" THICKNESS

TOLERANCES IN THE ADJACENT TABLES MAY NOT VARY MORE THAN ±1.5% FOR THE DIMENSIONS SHOWN. OTHERWISE THEY MUST CONFORM TO AASHTO M 170.

TYPE "B"

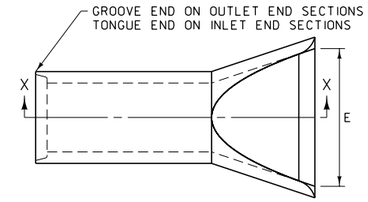

PLAN

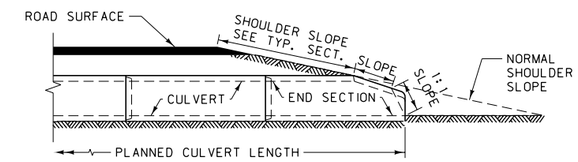

SLOPE DETAIL

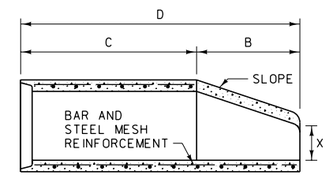

SECTION X-X

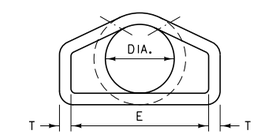

END VIEW

TYPE "B"							
DIA.	SLOPE	X	B	C	D	E	T *
12"	2.4:1	4"	2'-0"	4'-0"	6'-0"	2'-0"	2"
15"	2.4:1	6"	2'-3"	3'-9"	6'-0"	2'-6"	2 1/4"
18"	2.3:1	9"	2'-3"	3'-9"	6'-0"	3'-0"	2 1/2"
24"	2.5:1	9 1/2"	3'-7 1/2"	2'-4 1/2"	6'-0"	4'-0"	3"
30"	2.5:1	1'-0"	4'-6"	1'-6"	6'-0"	5'-0"	3 1/2"
36"	2.5:1	1'-3"	5'-3"	2'-11"	8'-2"	6'-0"	4"
42"	2.5:1	1'-9"	5'-3"	2'-11"	8'-2"	6'-6"	4 1/2"
48"	2.5:1	2'-0"	6'-0"	2'-2"	8'-2"	7'-0"	5"
54"	2.0:1	2'-3"	5'-5"	2'-9 1/2"	8'-2 1/2"	7'-6"	5 1/2"

* WALL "B" THICKNESS

LARGE DIAMETER PIPE

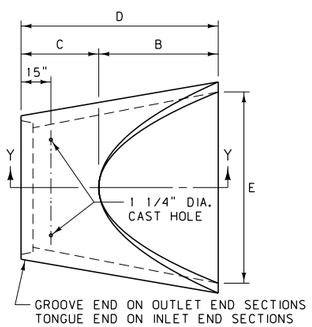

PLAN

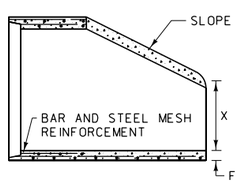

SECTION Y-Y

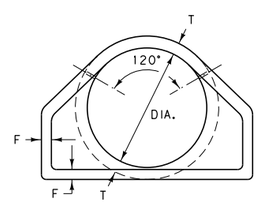

END VIEW

LARGE DIAMETER CULVERT								
DIA.	SLOPE	T *	X	B	C	D	E	F
60"	1.9:1	6"	2'-11"	5'-0"	3'-3"	8'-3"	8'-0"	5"
66"	1.7:1	6 1/2"	2'-6"	6'-0"	2'-3"	8'-3"	8'-6"	5 1/2"
72"	1.9:1	7"	3'-0"	6'-6"	1'-9"	8'-3"	9'-0"	6"
78"	1.8:1	7 1/2"	3'-0"	7'-6"	1'-9"	9'-3"	9'-6"	6 1/2"
84"	1.5:1	8"	3'-0"	7'-6 1/2"	1'-9"	9'-3 1/2"	10'-0"	6 1/2"
90"	1.5:1	8 1/2"	3'-5"	7'-3 1/2"	2'-0"	9'-3 1/2"	11'-0"	6 1/2"

* WALL "B" THICKNESS

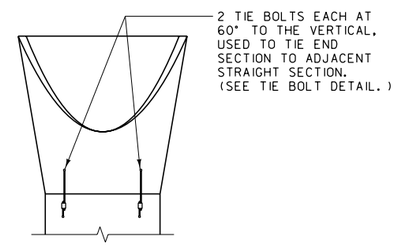

TIE BOLT CONNECTION

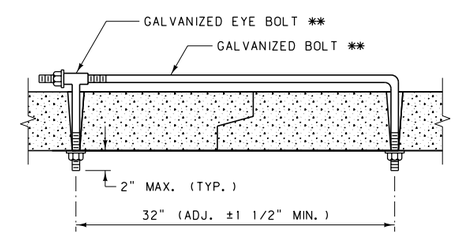

** 3/4" FOR 12" TO 54" DIA. RCP
1" FOR 60" TO 90" DIA. RCP

TIE BOLT DETAIL
(TWO PER END SECTION)

TIE BOLTS: USE TWO TIE BOLTS ON ALL FLARED END SECTIONS, ONE ON EACH SIDE AT 60° TO THE VERTICAL. GALVANIZE ALL PARTS. SEE TIE BOLT DETAIL.

CONSTRUCTION: CONSTRUCT PER SECTION 708.

DETAILED DRAWING	
REFERENCE STANDARD SPEC. SECTION 603,708	DWG. NO. 603-08

PREFABRICATED RCP
FLARED END TERMINAL
SECTION (FETS)

EFFECTIVE: SEPTEMBER 2014

MDT MONTANA DEPARTMENT OF TRANSPORTATION

TYPE "A"

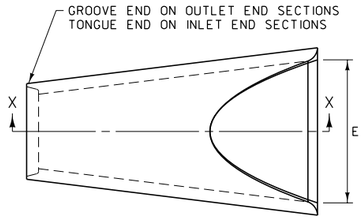

PLAN

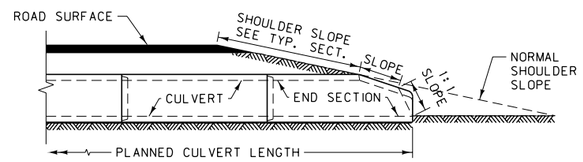

SLOPE DETAIL

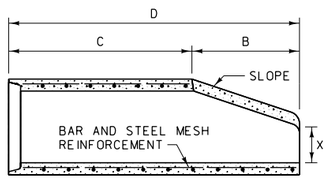

SECTION X-X

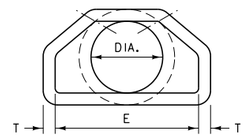

END VIEW

TYPE "A"							
DIA.	SLOPE	X	B	C	D	E	T *
300	2.4:1	101.6	609.6	1219.2	1828.8	609.6	50.8
375	2.4:1	152.4	685.8	1143.0	1828.8	762.0	57.2
450	2.3:1	228.6	685.8	1143.0	1828.8	914.4	63.5
600	2.5:1	241.3	1104.9	723.9	1828.8	1219.2	76.2
750	2.5:1	304.8	1371.6	457.2	1828.8	1524.0	88.9
900	2.5:1	381.0	1600.2	889.0	2489.2	1828.8	101.6
1050	2.5:1	533.4	1600.2	889.0	2489.2	1981.2	114.3
1200	2.5:1	609.6	1828.8	660.4	2489.2	2133.6	127.0
1350	2.0:1	685.8	1651.0	850.9	2501.9	2286.0	139.7

* WALL "B" THICKNESS

TOLERANCES IN THE ADJACENT TABLES MAY NOT VARY MORE THAN ±1.5% FOR THE DIMENSIONS SHOWN. OTHERWISE THEY MUST CONFORM TO AASHTO M 170.

TYPE "B"

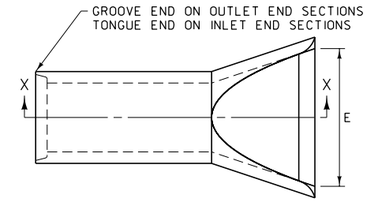

PLAN

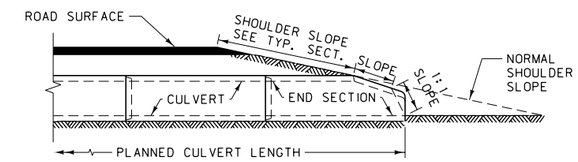

SLOPE DETAIL

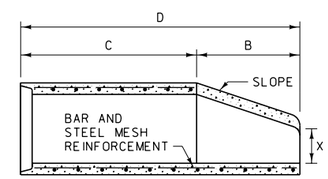

SECTION X-X

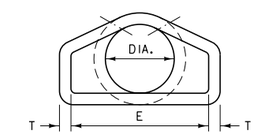

END VIEW

TYPE "B"							
DIA.	SLOPE	X	B	C	D	E	T *
300	2.4:1	101.6	609.6	1219.2	1828.8	609.6	50.8
375	2.4:1	152.4	685.8	1143.0	1828.8	762.0	57.2
450	2.3:1	228.6	685.8	1143.0	1828.8	914.4	63.5
600	2.5:1	241.3	1104.9	723.9	1828.8	1219.2	76.2
750	2.5:1	304.8	1371.6	457.2	1828.8	1524.0	88.9
900	2.5:1	381.0	1600.2	889.0	2489.2	1828.8	101.6
1050	2.5:1	533.4	1600.2	889.0	2489.2	1981.2	114.3
1200	2.5:1	609.6	1828.8	660.4	2489.2	2133.6	127.0
1350	2.0:1	685.8	1651.0	850.9	2501.9	2286.0	139.7

* WALL "B" THICKNESS

LARGE DIAMETER PIPE

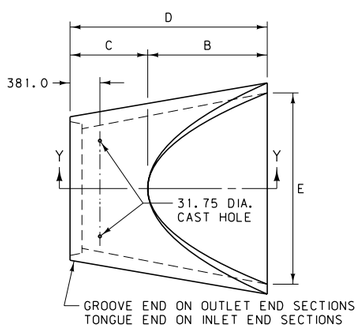

PLAN

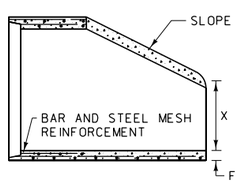

SECTION Y-Y

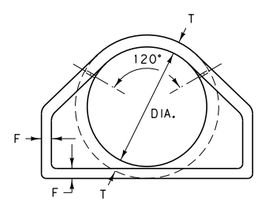

END VIEW

LARGE DIAMETER CULVERT								
DIA.	SLOPE	T *	X	B	C	D	E	F
1500	1.9:1	152.4	889.0	1524.0	990.6	2514.6	2438.4	127.0
1650	1.7:1	165.1	762.0	1828.8	685.8	2514.6	2590.8	139.7
1800	1.9:1	177.8	914.4	1981.2	533.4	2514.6	2743.2	152.4
1950	1.8:1	190.5	914.4	2286.0	533.4	2819.4	2895.6	165.1
2100	1.5:1	203.2	914.4	2298.7	533.4	2832.1	3048.0	165.1
2250	1.5:1	215.9	1041.4	2222.5	609.6	2832.1	3352.8	165.1

* WALL "B" THICKNESS

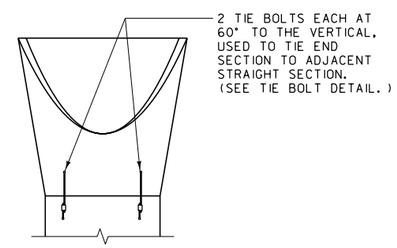

TIE BOLT CONNECTION

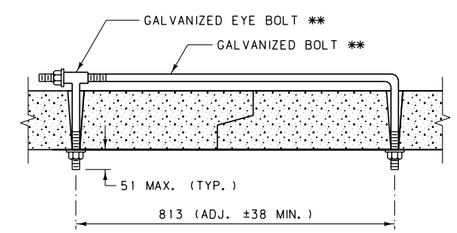

** M20 FOR 300 TO 1350 DIA. RCP
M24 FOR 1500 TO 2250 DIA. RCP

TIE BOLT DETAIL
(TWO PER END SECTION)

ALL DIMENSIONS ARE MILLIMETERS (mm) UNLESS OTHERWISE NOTED.

TIE BOLTS: USE TWO TIE BOLTS ON ALL FLARED END SECTIONS, ONE ON EACH SIDE AT 60° TO THE VERTICAL. GALVANIZE ALL PARTS. SEE TIE BOLT DETAIL.

CONSTRUCTION: CONSTRUCT PER SECTION 708.

DETAILED DRAWING

REFERENCE STANDARD SPEC. SECTION 603, 708

DWG. NO. 603-08

PREFABRICATED RCP FLARED END TERMINAL SECTION (FETS) (METRIC)

EFFECTIVE: SEPTEMBER 2014

MDT MONTANA DEPARTMENT OF TRANSPORTATION

DIMENSION TABLE

EQUIV. SIZE	SPAN	RISE	T *	X	B	C	D	E	R	SLOPE
18"	22"	13 1/2"	2 1/2"	7"	27"	45"	72"	36"	3"	3:1
24"	28 1/2"	18"	3 1/2"	8 1/2"	39"	33"	72"	48"	3"	3:1
30"	36 1/4"	22 1/2"	4"	9 1/2"	50"	46"	96"	60"	3"	3:1
36"	43 3/4"	26 5/8"	4 1/2"	11 1/8"	60"	36"	96"	72"	6"	3:1
42"	51 1/8"	31 5/16"	4 1/2"	15 13/16"	60"	36"	96"	78"	6"	3:1
48"	58 1/2"	36"	5"	21"	60"	36"	96"	84"	6"	3:1
54"	65"	40"	5 1/2"	25 1/2"	60"	36"	96"	90"	6"	3:1
60"	73"	45"	6"	31"	60"	36"	96"	96"	6"	3:1
72"	88"	54"	7"	31"	60"	36"	96"	120"	6"	2:1
84"	102"	62"	8"	21 1/2"	84"	24"	108"	144"	6"	2:1

* WALL "B" THICKNESS

METRIC DIMENSION TABLE

EQUIV. SIZE (mm)	SPAN (mm)	RISE (mm)	T * (mm)	X (mm)	B (mm)	C (mm)	D (mm)	E (mm)	R (mm)	SLOPE
450	560	345	63.5	177.8	685.8	1143.0	1828.8	914.4	76.2	3:1
600	725	460	88.9	215.9	990.6	838.2	1828.8	1219.2	76.2	3:1
750	920	570	101.6	241.3	1270.0	1168.4	2438.4	1524.0	76.2	3:1
900	1110	675	114.3	282.6	1524.0	914.4	2438.4	1828.8	152.4	3:1
1050	1300	795	114.3	401.6	1524.0	914.4	2438.4	1981.2	152.4	3:1
1200	1485	915	127.0	533.4	1524.0	914.4	2438.4	2133.6	152.4	3:1
1350	1650	1015	139.7	647.7	1524.0	914.4	2438.4	2286.0	152.4	3:1
1500	1855	1145	152.4	787.4	1524.0	914.4	2438.4	2438.4	152.4	3:1
1800	2235	1370	177.8	787.4	1524.0	914.4	2438.4	3048.0	152.4	2:1
2100	2590	1575	203.2	546.1	2133.6	609.6	2743.2	3657.6	152.4	2:1

* WALL "B" THICKNESS

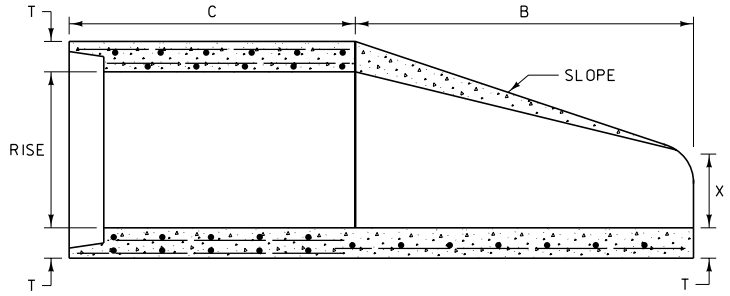

LONGITUDINAL SECTION

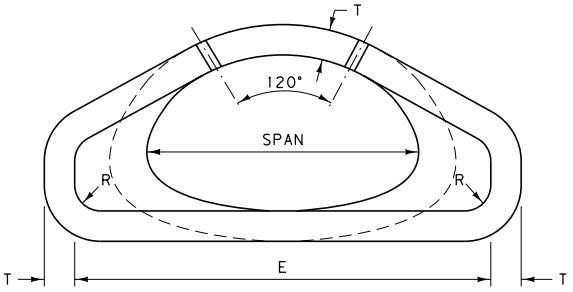

END VIEW

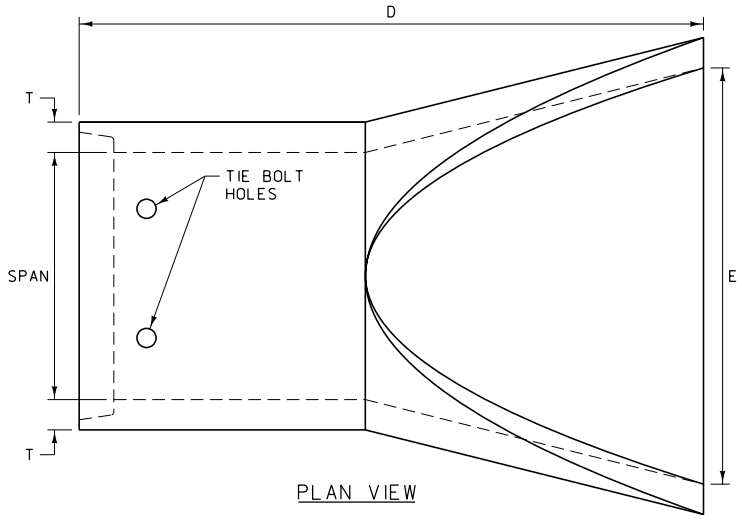

PLAN VIEW

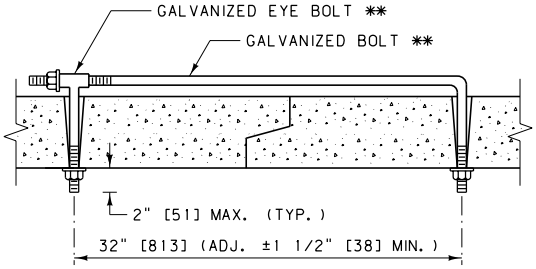

** 3/4" [M20] FOR 18" [450] TO 54" [1350] EQUIV. SIZE
1" [M24] FOR 60" [1500] TO 84" [2100] EQUIV. SIZE

TIE BOLT DETAIL
(TWO PER END SECTION)

TIE BOLTS: USE TIE BOLTS ON ALL FLARED END SECTIONS, ONE ON EACH SIDE AT 60° TO THE VERTICAL. GALVANIZE ALL PARTS PER SECTION 711. SEE TIE BOLT DETAIL.

CONSTRUCTION: CONSTRUCT PER SECTION 708.

UNITS SHOWN IN BRACKETS [] ARE METRIC AND ARE IN MILLIMETERS (mm) UNLESS OTHER UNITS ARE SHOWN.

DETAILED DRAWING	
REFERENCE STANDARD SPEC. SECTION 603, 708, 711	DWG. NO. 603-10
PREFABRICATED RCP ARCH FLARED END TERMINAL SECTION (FETS)	
EFFECTIVE: SEPTEMBER 2014	
MDT MONTANA DEPARTMENT OF TRANSPORTATION	

ROAD APPROACH CULVERT END TREATMENT										
QUANTITIES (FOR ESTIMATING ONLY)										
DIA. A RCP	H PIPE LENGTH	F-64 1/2" x 4 1/8" FERRULE LOOP INSERT (EACH)	LENGTH 2 1/2" DIA. SCHEDULE 40 GALV. PIPE	DIMENSIONS (FT.)						
				B	C	D	E	G	R	J
15"	4.75'	~	~	~	~	0.69	0.27	4.0	0.25	0.75
18"	6.5'	~	~	~	~	0.71	0.25	5.75	0.25	0.75
24"	10.0'	10	12.5'	0.5	2.0	0.75	0.21	9.25	0.25	0.75
METRIC QUANTITIES (FOR ESTIMATING ONLY)										
DIA. A RCP	H PIPE LENGTH	M12 x 105 FERRULE LOOP INSERT, EACH	LENGTH 63 DIA. SCHEDULE 40 GALV. PIPE	DIMENSIONS (mm)						
				B	C	D	E	G	R	J
375	1448	~	~	~	~	210	82	1219	76	229
450	1981	~	~	~	~	216	76	1752	76	229
600	3048	10	3800	152	610	229	64	2819	76	229

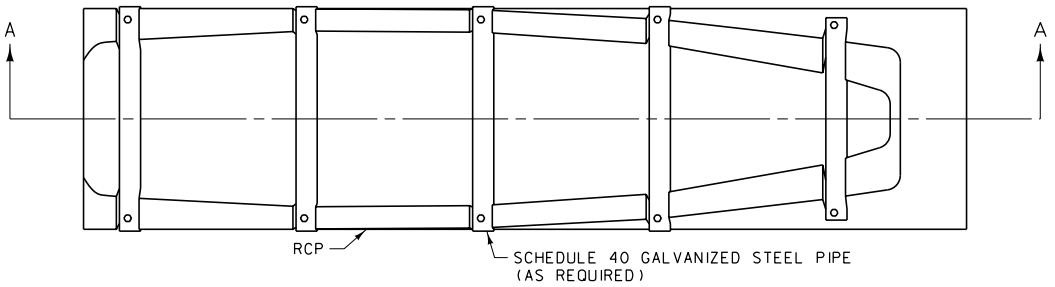

PLAN VIEW

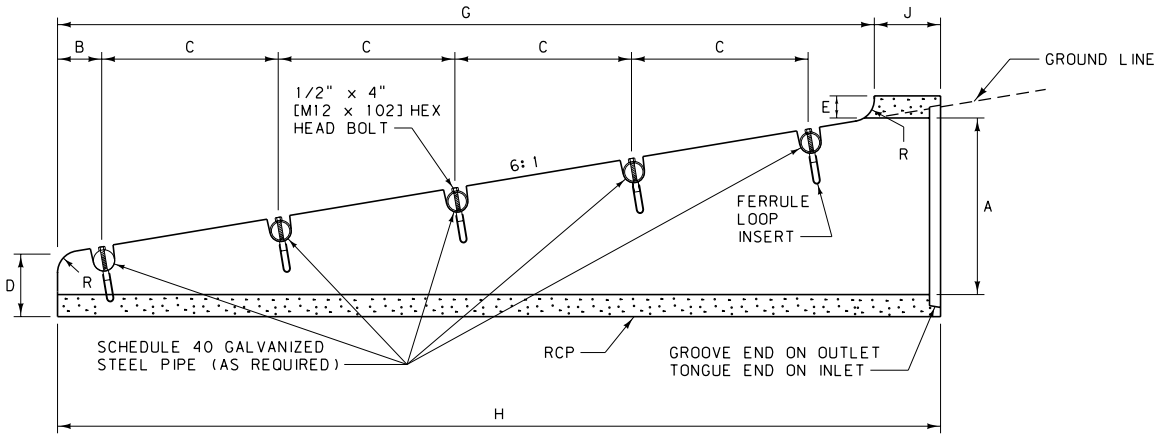

SECTION A-A

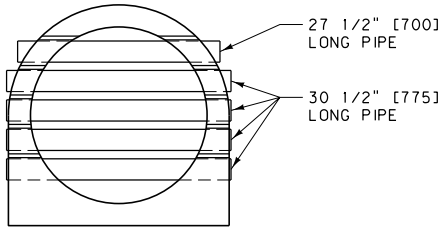

END VIEW

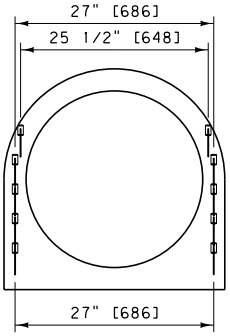

VIEW OF INSERTS

NOTE:
PAINT ALL NON-GALVANIZED PARTS.
PER SECTION 710.

UNITS SHOWN IN BRACKETS [] ARE METRIC AND ARE IN MILLIMETERS (mm) UNLESS OTHER UNITS ARE SHOWN.

DETAILED DRAWING	
REFERENCE STANDARD SPEC. SECTION 603, 710, 711	DWG. NO. 603-12
RCP ROAD APPROACH CULVERT END TREATMENT (RACET)	
EFFECTIVE: SEPTEMBER 2014	
MDT MONTANA DEPARTMENT OF TRANSPORTATION	

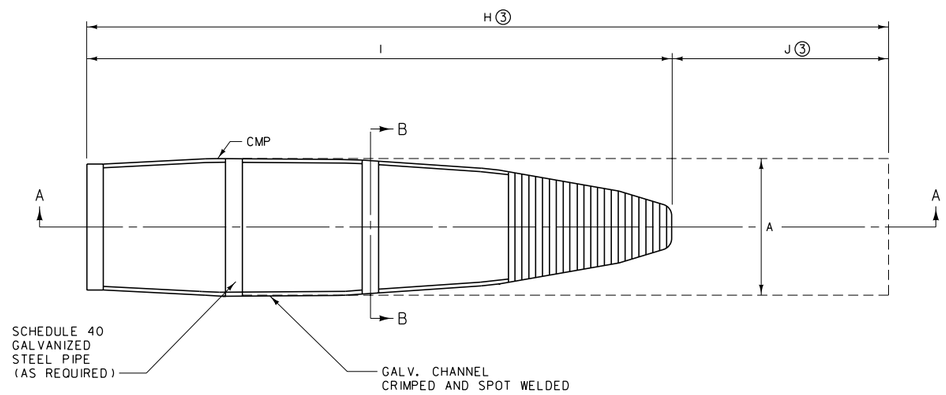

PLAN VIEW

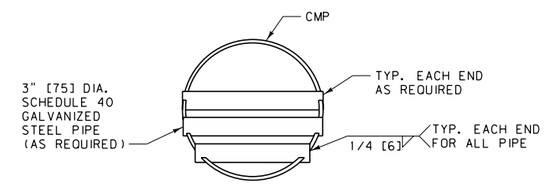

END VIEW

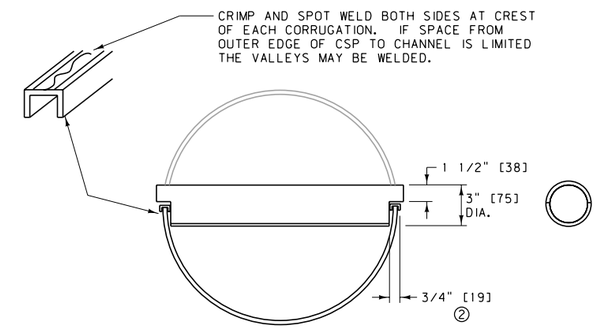

SECTION B-B

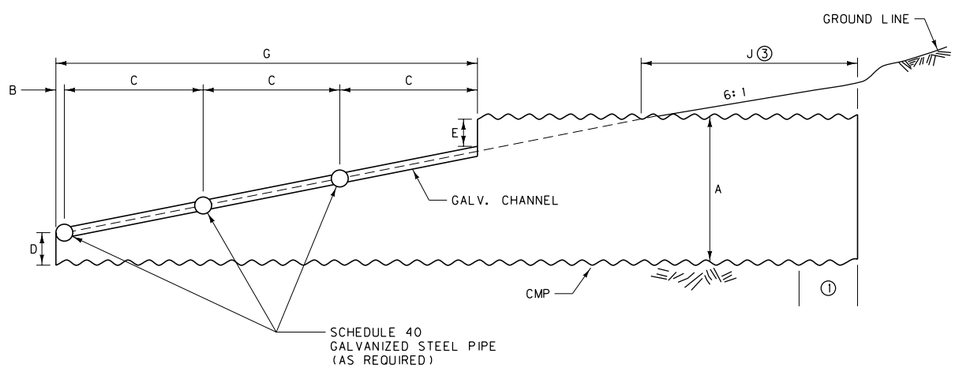

SECTION A-A

ILLUSTRATED WITH 24" [600] CMP (30" [750] CMP UTILIZES FOUR GALV. STEEL PIPES)

NOTES:

① PIPE TO HAVE ANNULAR CORRUGATION OR REROLLED ENDS. USE ONLY APPROVED COUPLING BAND PER SECTION 709 FOR CMP. FOR RCP END TREATMENT, SEE DTL. DWG. NO. 603-26 FOR CONNECTION.

② THE TWO 3/4" [19]CHANNELS MAY BE ELIMINATED FROM THE CULVERT END TREATMENT IF:

A. THE CULVERT IS FABRICATED WITH 12 GAUGE (0.109" [2.8]THICK) MATERIAL.

B. HALF CIRCLE NOTCHES ARE CUT IN THE CULVERT FOR THE STEEL PIPE WITH CONTINUOUS WELD OF THE PERIPHERY IN CONTACT PROVIDED.

C. ALL WELDS AND OTHER NON-GALVANIZED PARTS ARE PAINTED PER SECTION 710.

③ CONNECTIONS MADE PER DTL. DWG. NO. 603-26 REQUIRE PIPE LENGTHS H AND J TO BE INCREASED BY 3" [76].

ROAD APPROACH CULVERT END TREATMENT

QUANTITIES (FOR ESTIMATING ONLY)

DIA. A CMP	H PIPE LENGTH	3/4" x 3/8" x 1/8" GALV. CHANNEL	LENGTH 3" DIA SCHEDULE 40 GALV. PIPE	DIMENSIONS (FT.)						
				B	C	D	E	G	I	J
15"	7.0'	10'	~	~	~	0.20	0.20	5.0	6.0	1.0
18"	8.0'	10'	~	~	~	0.33	0.33	5.0	7.0	1.0
24"	10.0'	12'	6.0'	0.15	1.95	0.50	0.50	6.0	9.0	1.0
30"	12.5'	16'	10.0'	0.20	1.95	0.60	0.60	8.0	11.5	1.0

METRIC QUANTITIES (FOR ESTIMATING ONLY) (ALL DIMENSIONS IN MILLIMETERS)

DIA. A CMP	H PIPE LENGTH	19 x 10 x 3.2 GALV. CHANNEL	LENGTH 75 DIA. SCHEDULE 40 GALV. PIPE	DIMENSIONS						
				B	C	D	E	G	I	J
375	2134	3048	~	~	~	61	61	1524	1829	305
450	2438	3048	~	~	~	101	101	1524	2133	305
600	3048	3656	1800	46	594	152	152	1828	2743	305
750	3810	4874	3000	61	594	183	183	2437	3505	305

UNITS SHOWN IN BRACKETS [] ARE METRIC AND ARE IN MILLIMETERS (mm) UNLESS OTHER UNITS ARE SHOWN.

DETAILED DRAWING

REFERENCE STANDARD SPEC. SECTION 603, 709, 710

DWG. NO. 603-14

CMP ROAD APPROACH CULVERT END TREATMENT (RACET)

EFFECTIVE: SEPTEMBER 2014

MDT MONTANA DEPARTMENT OF TRANSPORTATION

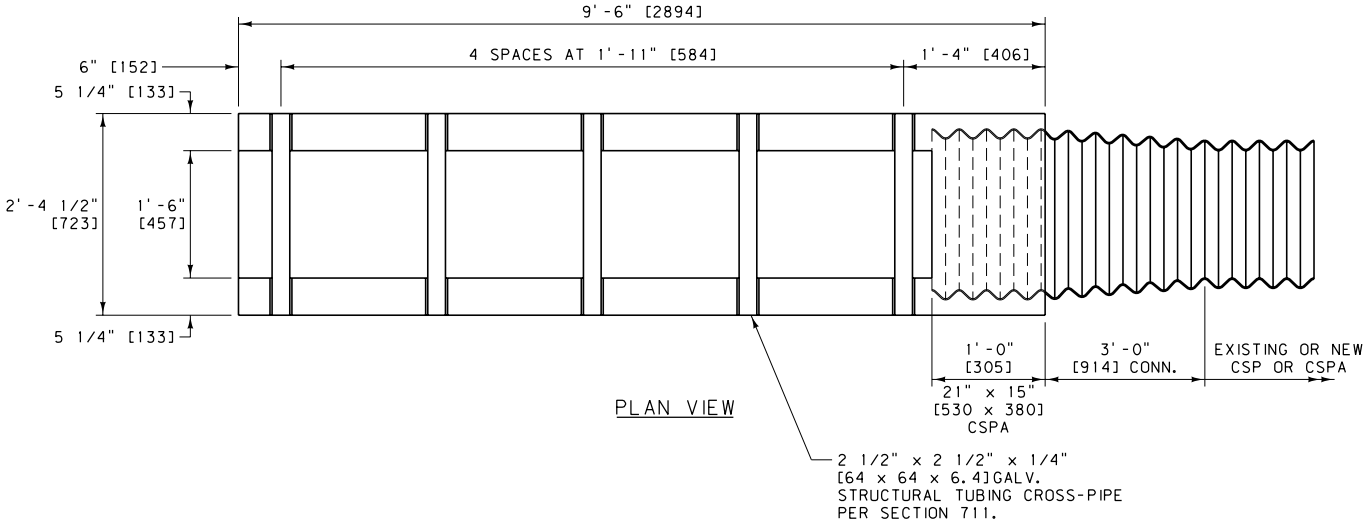

PLAN VIEW

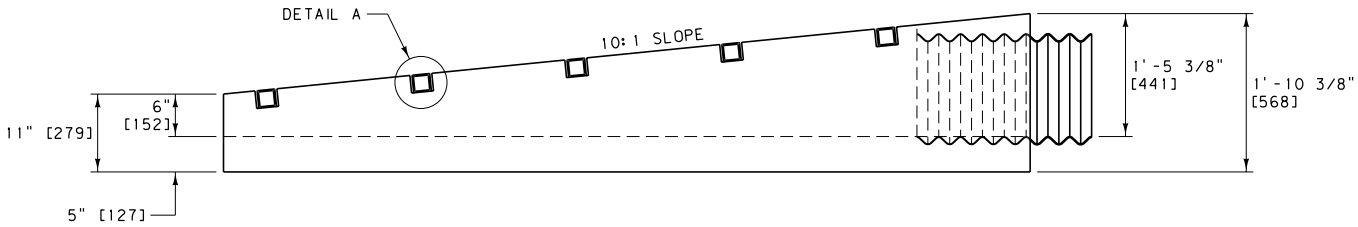

ELEVATION

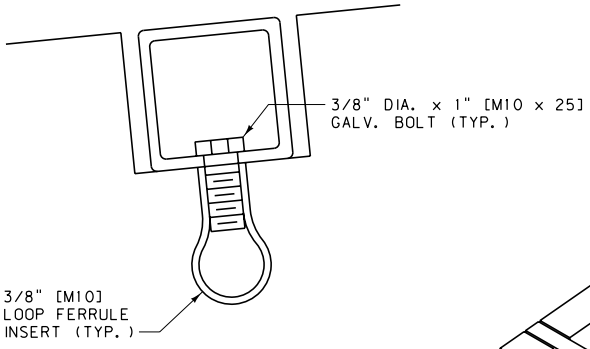

DETAIL A

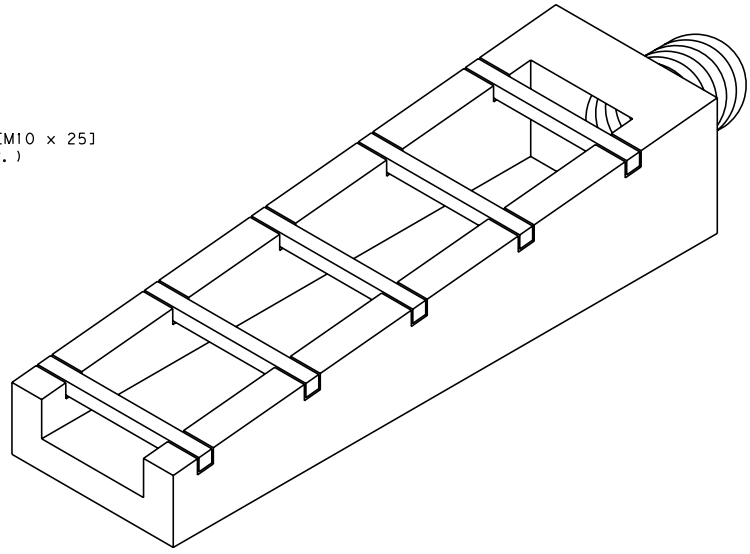

NOTE:
PAINT ALL EXPOSED METAL PARTS WITH ONE COAT OF ZINC RICH PAINT AND TWO COATS OF ALUMINUM PAINT PER SECTION 710.

UNITS SHOWN IN BRACKETS [] ARE METRIC AND ARE IN MILLIMETERS (mm) UNLESS OTHER UNITS ARE SHOWN.

DETAILED DRAWING	
REFERENCE STANDARD SPEC. SECTION 603, 708, 710, 711	DWG. NO. 603-17
PRECAST MEDIAN U-TURN CROSS DRAIN AND CONC. BEVELED END	
EFFECTIVE: SEPTEMBER 2014	
MDT MONTANA DEPARTMENT OF TRANSPORTATION	

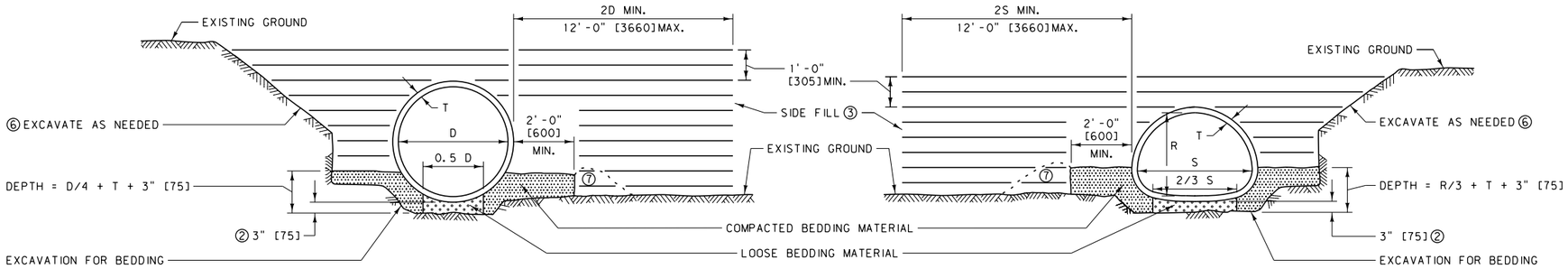

1-STANDARD BEDDING INSTALLATION

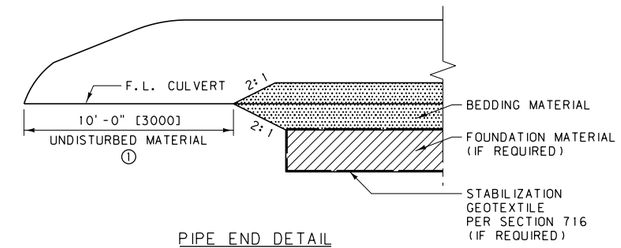

PIPE END DETAIL

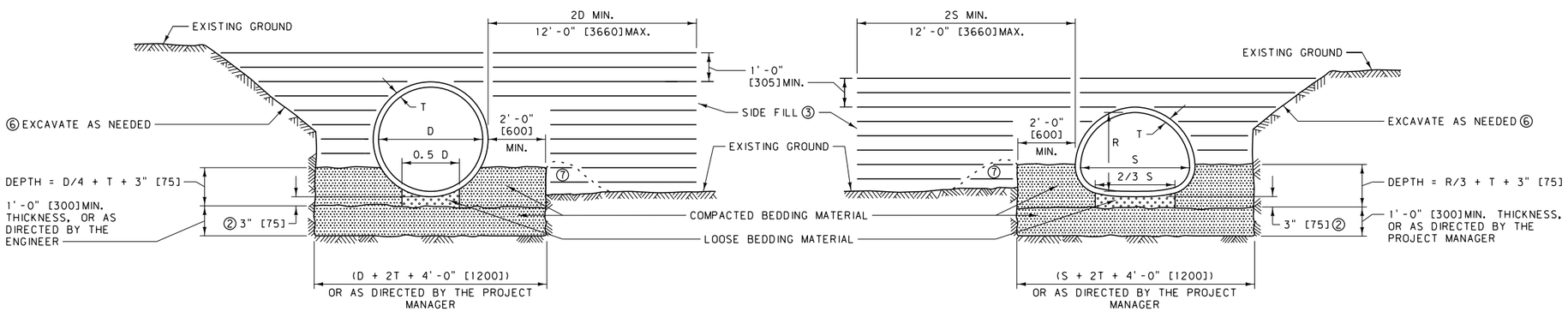

2-ROCK

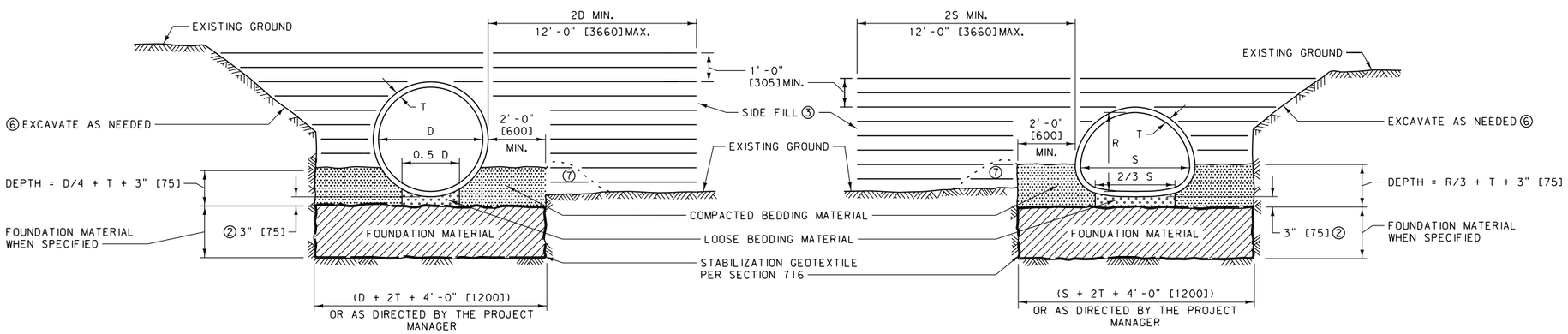

3-FOUNDATION STABILIZATION

NOTES:

① DO NOT EXTEND BEDDING MATERIAL TO THE END OF THE PIPE. LEAVE 10' [3000]OF UNDISTURBED MATERIAL AT EACH END UNLESS OTHERWISE NOTED IN PLANS. SEE PIPE END DETAIL.

② PLACE LOOSE BEDDING MATERIAL UNIFORMLY IN THE BOTTOM OF THE TRENCH AND SHAPE TO FIT BOTTOM OFPIPE. THE MINIMUM THICKNESS BEFORE PLACING PIPE IS 3" [75]. 42" [1050] AND 48" [1200] RCP IRR. REQUIRE 4" [100] DEPTH OF LOOSE BEDDING MATERIAL TO ACCOMODATE BELL THICKNESS. AFTER LAYING CULVERT, COMPACT BEDDING MATERIAL AT HAUNCHES AND SIDES OF PIPE.

③ COMPACT AND PLACE SIDE FILL PER SECTION 603 AND 203.

④ FURNISH BEDDING AND FOUNDATION MATERIAL PER SECTION 701.

⑤ DIMENSIONS D, S AND R ARE INSIDE PIPE DIAMETER, SPAN AND RISE. DIMENSION T IS THE CULVERT SHELL THICKNESS FOR CONCRETE OR CORRUGATION WIDTH FOR METAL. CORRUGATION WIDTHS ARE TYPICALLY 1/2" [13] FOR 48" [1200] EQUIVALENT SIZE METAL CULVERTS AND SMALLER.

⑥ EXCAVATE A SUFFICIENT AMOUNT TO PROVIDE A SAFE WORKING ENVIRONMENT AND TO ALLOW ACHIEVEMENT OF ALL CULVERT INSTALLATION AND COMPACTION REQUIREMENTS. SLOPE, BENCH OR PROVIDE SHORING FOR ALL EXCAVATIONS IN ACCORDANCE WITH THE U.S. DEPARTMENT OF LABOR, OCCUPATIONAL SAFETY AND HEALTH ADMINISTRATION (OSHA) SAFETY AND HEALTH REGULATIONS FOR CONSTRUCTION.

⑦ BUILD BERM WITH FILL MATERIAL AS NEEDED TO CONTAIN THE BEDDING MATERIAL TO THE PROPER DEPTH.

UNITS SHOWN IN BRACKETS [] ARE METRIC AND ARE IN MILLIMETERS (mm) UNLESS OTHER UNITS ARE SHOWN.

DETAILED DRAWING	
REFERENCE STANDARD SPEC. SECTION 203, 207, 603, 701	DWG. NO. 603-18
BEDDING FOR MAINLINE & PUBLIC APPROACH CULVERTS 48" [1200 mm]EQUIVALENT & SMALLER	
EFFECTIVE: SEPTEMBER 2014	

MDT MONTANA DEPARTMENT OF TRANSPORTATION

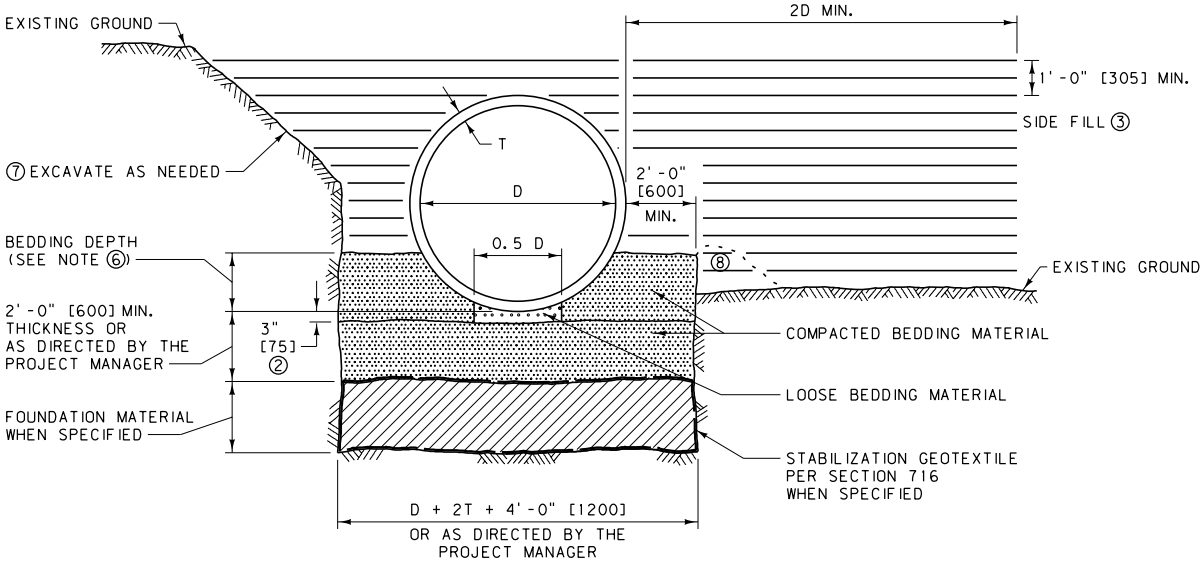

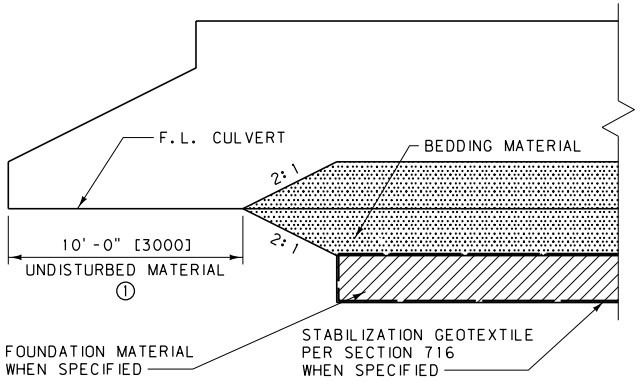

PIPE END DETAIL

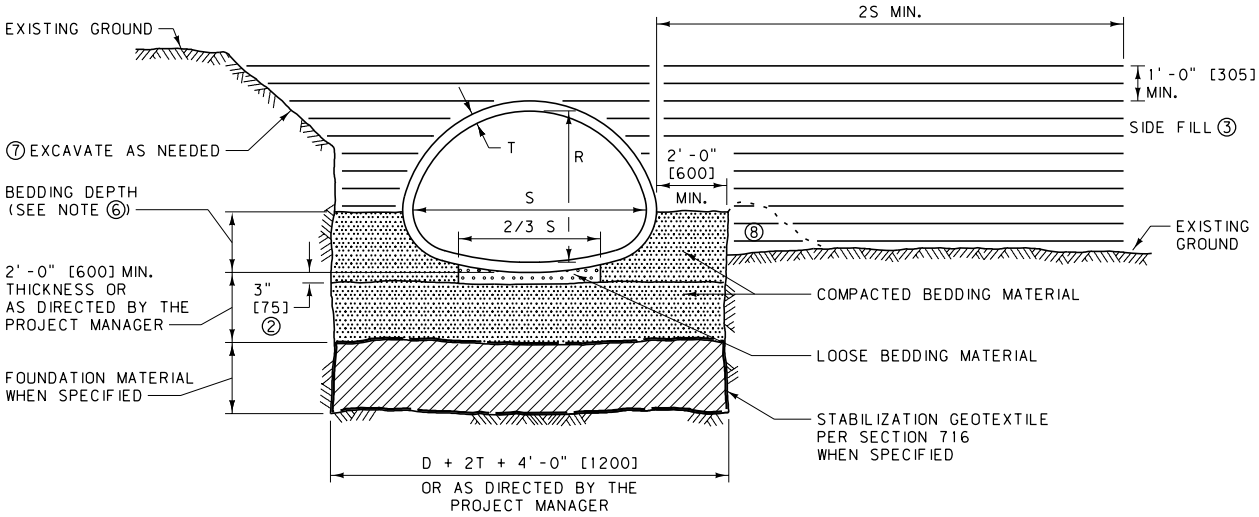

NOTES:

① DO NOT EXTEND BEDDING MATERIAL TO THE END OF THE PIPE. LEAVE 10' [3000] OF UNDISTURBED MATERIAL AT EACH END UNLESS OTHERWISE NOTED IN PLANS. SEE PIPE END DETAIL.

② PLACE LOOSE BEDDING MATERIAL UNIFORMLY IN THE BOTTOM OF THE TRENCH AND SHAPE TO FIT BOTTOM OF PIPE. THE MINIMUM THICKNESS BEFORE PLACING PIPE IS 3" [75]. RCP IRR. REQUIRE GREATER THAN 3" [75] OF LOOSE BEDDING MATERIAL TO ACCOMMODATE BELL THICKNESS. AFTER LAYING CULVERT, COMPACT BEDDING MATERIAL AT HAUNCHES AND SIDES OF PIPE.

③ COMPACT AND PLACE SIDE FILL PER SECTION 603 AND 203.

④ FURNISH BEDDING AND FOUNDATION MATERIAL PER SECTION 701.

⑤ DIMENSIONS D, S, AND R ARE THE INSIDE PIPE DIAMETER, SPAN, AND RISE. DIMENSION T IS THE CULVERT SHELL THICKNESS FOR CONCRETE OR CORRUGATION WIDTH FOR METAL.

⑥ THE BEDDING DEPTH FOR CONCRETE PIPE IS D/4 + T OR R/3 + T. THE BEDDING DEPTH FOR METAL PIPE IS "X" + T. SEE DTL. DWG. NO. 603-32 AND 603-34 FOR "X" DIMENSIONS OF METAL PIPES.

⑦ EXCAVATE A SUFFICIENT AMOUNT TO PROVIDE A SAFE WORKING ENVIRONMENT AND TO ALLOW ACHIEVEMENT OF ALL CULVERT INSTALLATION AND COMPACTION REQUIREMENTS. SLOPE, BENCH OR PROVIDE SHORING FOR ALL EXCAVATIONS IN ACCORDANCE WITH THE U.S. DEPARTMENT OF LABOR, OCCUPATIONAL SAFETY AND HEALTH ADMINISTRATION (OSHA) SAFETY AND HEALTH REGULATIONS FOR CONSTRUCTION.

⑧ BUILD BERM WITH FILL MATERIAL AS NEEDED TO CONTAIN THE BEDDING MATERIAL TO THE PROPER DEPTH.

UNITS SHOWN IN BRACKETS [] ARE METRIC AND ARE IN MILLIMETERS (mm) UNLESS OTHER UNITS ARE SHOWN.

DETAILED DRAWING	
REFERENCE STANDARD SPEC. SECTION 203, 207, 603, 701	DWG. NO. 603-19
BEDDING FOR CULVERTS 54" [1350 mm] EQUIVALENT & LARGER	
EFFECTIVE: SEPTEMBER 2014	
MDT MONTANA DEPARTMENT OF TRANSPORTATION	

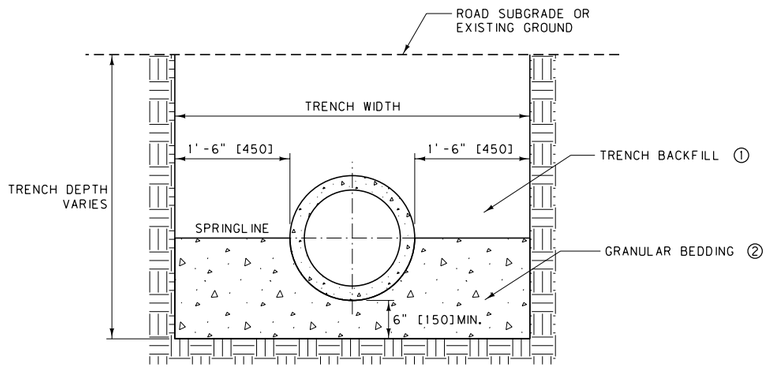

RIGID PIPE
TRENCH/BEDDING DETAIL
FOR 12" [300]TO 54" [1350]DIA.

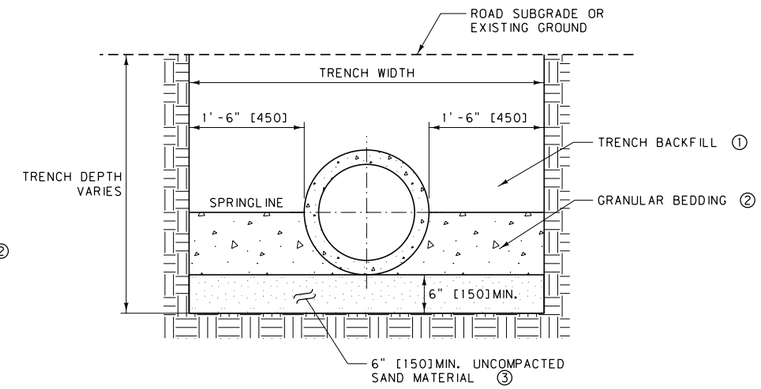

RIGID PIPE
TRENCH/BEDDING DETAIL
FOR 60" [1500]TO 84" [2100]DIA.

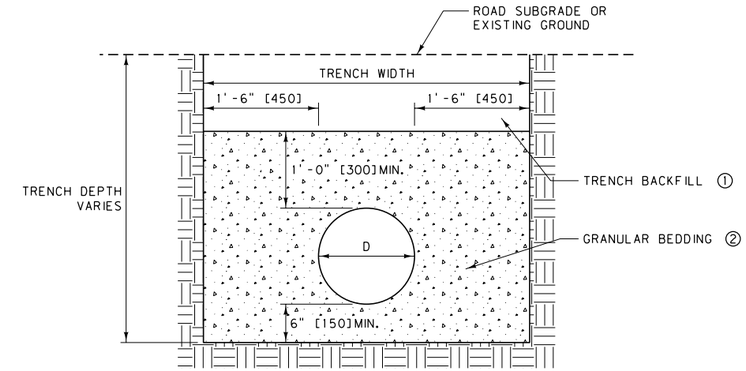

FLEXIBLE PIPE
TRENCH/BEDDING DETAIL
FOR 12" [300]TO 48" [1200]DIA.

QUANTITIES*		METRIC QUANTITIES	
RIGID PIPE 12" TO 54" DIA.		RIGID PIPE 300 TO 1350 DIA.	
DIAMETER	GRANULAR BEDDING (C.Y. PER Ft.)	DIAMETER (mm)	GRANULAR BEDDING (m^3 PER m)
12"	0.15	300	0.39
18"	0.20	450	0.50
24"	0.25	600	0.63
30"	0.30	750	0.75
36"	0.35	900	0.88
42"	0.41	1050	1.02
48"	0.46	1200	1.16
54"	0.52	1350	1.30

* BASED ON RCP B WALL PIPE.

QUANTITIES*		METRIC QUANTITIES	
RIGID PIPE 60" TO 84" DIA.		RIGID PIPE 1500 TO 2100 DIA.	
DIAMETER	GRANULAR BEDDING (C.Y. PER Ft.)	DIAMETER (mm)	GRANULAR BEDDING (m^3 PER m)
60"	0.48	1500	1.19
66"	0.54	1650	1.35
72"	0.60	1800	1.51
78"	0.67	1950	1.68
84"	0.74	2100	1.85

* BASED ON RCP B WALL PIPE.

QUANTITIES*		METRIC QUANTITIES	
FLEXIBLE PIPE 12" TO 48" DIA.		FLEXIBLE PIPE 300 TO 1200 DIA.	
DIAMETER	GRANULAR BEDDING (C.Y. PER Ft.)	DIAMETER (mm)	GRANULAR BEDDING (m^3 PER m)
12"	0.37	300	0.93
18"	0.47	450	1.17
24"	0.57	600	1.42
30"	0.67	750	1.67
36"	0.77	900	1.94
42"	0.88	1050	2.22
48"	1.00	1200	2.51

* BASED ON 1" [25 mm]NOMINAL WALL THICKNESS.

NOTES

① TRENCH BACKFILL: PLACE PER STANDARD SPECIFICATION 603.03.4. GRANULAR BEDDING MAY BE SUBSTITUTED AT NO ADDITIONAL COST.

② GRANULAR BEDDING: USE COARSE AGGREGATE FOR CONCRETE NO.2 GRADATION PER TABLE 701-4 IN STANDARD SPECIFICATION 701.01.2.

THE BEDDING MATERIAL DIRECTLY UNDERNEATH THE PIPE SHOULD BE LEFT UNCOMPACTED TO FACILITATE THE INSTALLATION OF THE PIPE.

COMPACT GRANULAR BEDDING BY PROOF ROLLING WITH VIBRATORY COMPACTOR IN 8 INCH [200]LIFTS OR BY USING A METHOD APPROVED BY THE PROJECT MANAGER.

③ SAND CUSHION: USE GRADE 5 MATERIAL PER TABLE 701-7 IN STANDARD SPECIFICATION 701.02.3.

THE SAND MATERIAL SHOULD BE LEFT UNCOMPACTED TO FACILITATE THE INSTALLATION OF THE PIPE.

INCLUDE THE SAND MATERIAL IN THE COST OF THE BEDDING.

UNITS SHOWN IN BRACKETS [] ARE METRIC AND ARE IN MILLIMETERS (mm) UNLESS OTHER UNITS ARE SHOWN.

DETAILED DRAWING	
REFERENCE STANDARD SPEC. SECTION 603, 701	DWG. NO. 603-20
TRENCH BEDDING DETAIL	
EFFECTIVE: SEPTEMBER 2014	

MDT MONTANA DEPARTMENT OF TRANSPORTATION

DIMENSION TABLE

DIA. D	APPROX. DIA. GASKET MATL. NOT STRETCHED	LENGTH OF JOINT J	D1	D2	L2 (MIN.)	L1 (WALL"B")	L1 (WALL"C")	X1	X2	Y1	Y2	Y3
12"	21/32"	3 5/8"	15.223"	15.331"	5"	2"	~	1"	7/8"	0.062"	0.090"	0.313"
15"	21/32"	3 5/8"	18.723"	18.831"	4 3/4"	2 3/16"	~	1"	7/8"	0.062"	0.090"	0.313"
18"	21/32"	3 5/8"	22.098"	22.206"	5"	2 3/8"	~	1"	7/8"	0.062"	0.090"	0.313"
21"	21/32"	3 7/8"	25.600"	25.724"	5 1/4"	2 9/16"	~	1"	7/8"	0.062"	0.090"	0.313"
24"	21/32"	3 7/8"	28.975"	29.099"	5 1/2"	2 3/4"	2"	1"	7/8"	0.062"	0.090"	0.313"
27"	21/32"	4"	32.476"	32.608"	5 1/2"	2 3/4"	2"	1"	7/8"	0.062"	0.090"	0.313"
30"	21/32"	4"	35.976"	36.108"	5 1/2"	2 3/4"	2"	1"	7/8"	0.062"	0.090"	0.313"
33"	21/32"	4 1/8"	39.476"	39.616"	5 3/4"	2 7/8"	2 1/8"	1"	7/8"	0.062"	0.090"	0.313"
36"	21/32"	4 1/8"	42.976"	43.116"	6"	3 1/8"	2 3/8"	1"	7/8"	0.062"	0.090"	0.313"
42"	3/4"	4 5/8"	50.183"	50.183"	6 3/4"	3 3/4"	3"	1 3/16"	1"	0.067"	0.129"	0.376"
48"	3/4"	4 3/4"	57.023"	57.193"	7 1/4"	4 1/8"	3 3/8"	1 3/16"	1"	0.067"	0.129"	0.376"
54"	3/4"	5"	63.007"	63.192"	7 1/2"	3 5/8"	2 7/8"	1 3/16"	1"	0.067"	0.129"	0.376"
60"	3/4"	5"	69.007"	69.192"	7 1/2"	3 1/8"	2 3/8"	1 3/16"	1"	0.067"	0.129"	0.376"
66"	13/16"	5"	75.007"	75.192"	7 1/2"	2 3/4"	2"	1 3/16"	1"	0.067"	0.129"	0.376"
72"	13/16"	5 1/4"	79.250"	79.400"	~	~	~	1 3/16"	1 1/4"	0.093"	0.190"	0.376"
78"	13/16"	5 1/4"	86.250"	86.400"	~	~	~	1 3/16"	1 1/4"	0.093"	0.190"	0.376"
84"	13/16"	5 1/4"	91.500"	91.650"	~	~	~	1 3/16"	1 1/4"	0.093"	0.190"	0.376"
90"	13/16"	5 1/4"	97.750"	97.900"	~	~	~	1 3/16"	1 1/4"	0.093"	0.190"	0.376"
96"	13/16"	5 1/4"	104.250"	104.400"	~	~	~	1 3/16"	1 1/4"	0.093"	0.190"	0.376"
102"	13/16"	5 1/4"	110.750"	110.900"	~	~	~	1 3/16"	1 1/4"	0.093"	0.190"	0.376"
108"	13/16"	5 1/4"	117.250"	117.400"	~	~	~	1 3/16"	1 1/4"	0.093"	0.190"	0.376"

METRIC DIMENSION TABLE (mm)

DIA. D	APPROX. DIA. GASKET MATL. NOT STRETCHED	LENGTH OF JOINT J	D1	D2	L2 (MIN.)	L1 (WALL"B")	L1 (WALL"C")	X1	X2	Y1	Y2	Y3
300	16.67	92.08	386.66	389.41	127.00	50.80	~	25.40	22.23	1.57	2.29	7.95
375	16.67	92.08	475.56	478.31	120.65	55.56	~	25.40	22.23	1.57	2.29	7.95
450	16.67	92.08	561.29	564.03	127.00	60.33	~	25.40	22.23	1.57	2.29	7.95
525	16.67	98.43	650.24	653.39	133.35	65.09	~	25.40	22.23	1.57	2.29	7.95
600	16.67	98.43	735.97	739.11	139.70	69.85	50.80	25.40	22.23	1.57	2.29	7.95
675	16.67	101.60	824.89	828.24	139.70	69.85	50.80	25.40	22.23	1.57	2.29	7.95
750	16.67	101.60	913.79	917.14	139.70	69.85	50.80	25.40	22.23	1.57	2.29	7.95
825	16.67	104.78	1002.69	1006.25	146.05	73.03	53.98	25.40	22.23	1.57	2.29	7.95
900	16.67	104.78	1091.59	1095.15	152.40	79.38	60.33	25.40	22.23	1.57	2.29	7.95
1050	19.05	117.48	1274.65	1274.65	171.45	95.25	76.20	30.16	25.40	1.70	3.28	9.55
1200	19.05	120.65	1448.38	1452.70	184.15	104.78	85.73	30.16	25.40	1.70	3.28	9.55
1350	19.05	127.00	1600.38	1605.08	190.50	92.08	73.03	30.16	25.40	1.70	3.28	9.55
1500	19.05	127.00	1752.78	1757.48	190.50	79.38	60.33	30.16	25.40	1.70	3.28	9.55
1650	20.64	127.00	1905.18	1909.88	190.50	69.85	50.80	30.16	25.40	1.70	3.28	9.55
1800	20.64	133.35	2012.95	2016.76	~	~	~	30.16	31.75	2.36	4.83	9.55
1950	20.64	133.35	2190.75	2194.56	~	~	~	30.16	31.75	2.36	4.83	9.55
2100	20.64	133.35	2324.10	2327.91	~	~	~	30.16	31.75	2.36	4.83	9.55
2250	20.64	133.35	2482.85	2486.66	~	~	~	30.16	31.75	2.36	4.83	9.55
2400	20.64	133.35	2647.95	2651.76	~	~	~	30.16	31.75	2.36	4.83	9.55
2550	20.64	133.35	2813.05	2816.86	~	~	~	30.16	31.75	2.36	4.83	9.55
2700	20.64	133.35	2978.15	2981.96	~	~	~	30.16	31.75	2.36	4.83	9.55

72" [1800] DIA. PIPES AND LARGER

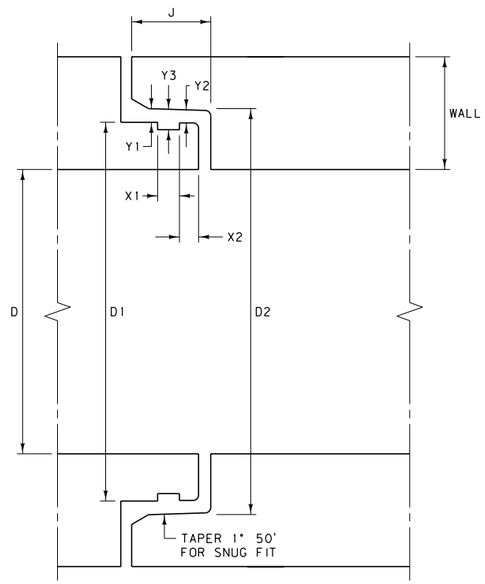

66" [1650] DIA. PIPES AND SMALLER

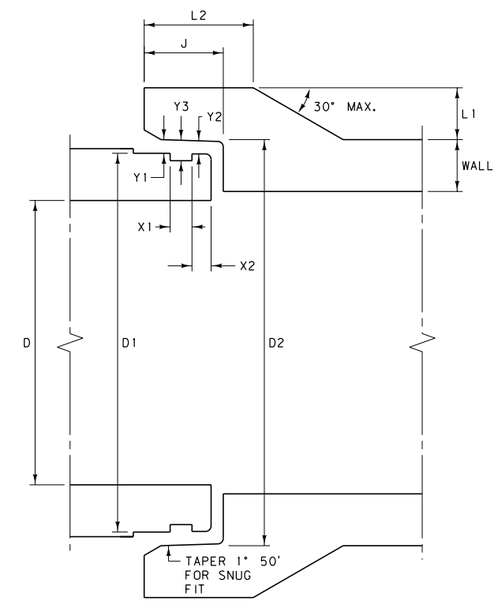

NOTES:

TYPICAL FOR STORM DRAIN AND IRRIGATION APPLICATIONS (FOR HEADS UP TO 20 FEET [6.1 m]).

USE RUBBER GASKETS THAT MEET THE REQUIREMENTS OF SECTION 707.

UNITS SHOWN IN BRACKETS [] ARE METRIC AND ARE IN MILLIMETERS (mm) UNLESS OTHER UNITS ARE SHOWN.

DETAILED DRAWING

REFERENCE STANDARD SPEC. SECTION 603, 707, 708

DWG. NO. 603-22

WATER TIGHT JOINT FOR REINFORCED CONCRETE PIPE

EFFECTIVE: SEPTEMBER 2014

MDT MONTANA DEPARTMENT OF TRANSPORTATION

DIMENSION TABLE

DIA. D	XSEC. WATER AREA (SQ. FT.)	WT. PER FOOT OF PIPE (LB.)	T ✱ MIN. WALL THICKNESS	J LENGTH OF JOINT	A (NOMINAL) = $\frac{D2 - D1}{2}$	D1	D2	D3	D4
12"	0.79	92	2"	1 3/4"	3/16"	13 1/4"	13 5/8"	13 7/8"	14 1/4"
15"	1.23	127	2 1/4"	2"	3/16"	16 1/2"	16 7/8"	17 1/4"	17 5/8"
18"	1.77	168	2 1/2"	2 1/4"	3/16"	19 5/8"	20"	20 3/8"	20 3/4"
21"	2.40	214	2 3/4"	2 1/2"	3/16"	22 7/8"	23 1/4"	23 3/4"	24 1/8"
24"	3.14	265	3"	2 3/4"	3/16"	26"	26 3/8"	27"	27 3/8"
27"	3.98	322	3 1/4"	3"	3/16"	29 1/4"	29 5/8"	30 1/4"	30 5/8"
30"	4.91	384	3 1/2"	3 1/4"	3/16"	32 3/8"	32 3/4"	33 1/2"	33 7/8"
33"	5.94	452	3 3/4"	3 1/2"	1/4"	35 1/2"	36"	36 3/4"	37 1/4"
36"	7.07	524	4"	3 3/4"	1/4"	38 3/4"	39 1/4"	40"	40 1/2"
42"	9.62	685	4 1/2"	4"	1/4"	45 1/8"	45 3/8"	46 1/2"	47"
48"	12.57	867	5"	4 1/4"	1/4"	51 1/2"	52"	53"	53 1/2"
54"	15.90	1070	5 1/2"	4 1/2"	1/4"	57 7/8"	58 3/8"	59 3/8"	59 7/8"
60"	19.63	1296	6"	5"	1/4"	64 1/4"	64 3/4"	66"	66 1/2"
66"	23.76	1542	6 1/2"	5 1/2"	1/4"	70 5/8"	71 1/8"	72 1/2"	73"
72"	28.27	1810	7"	6"	1/4"	77"	77 1/2"	79"	79 1/2"
78"	33.18	2098	7 1/2"	6 1/2"	1/4"	83 3/8"	83 7/8"	85 5/8"	86 1/3"
84"	38.48	2410	8"	7"	1/4"	89 3/4"	90 1/4"	92 1/8"	92 5/8"
90"	44.18	2740	8 1/2"	7"	1/4"	95 3/4"	96 1/4"	98 1/8"	98 5/8"
96"	50.27	2950	9"	7"	1/4"	102 1/8"	102 5/8"	104 1/2"	105"
102"	56.75	3075	9 1/2"	7 1/2"	1/4"	109"	109 1/2"	111 1/2"	112"
108"	63.62	3870	10"	7 1/2"	1/4"	115 1/2"	116"	118"	118 1/2"

✱ WALL "B" THICKNESS

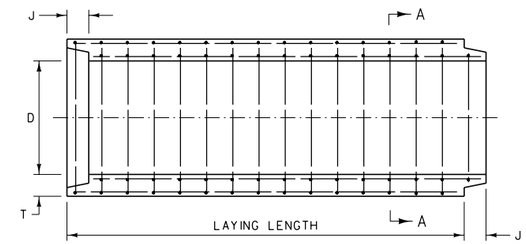

TYPICAL LONGITUDINAL SECTION

36" [900] DIAMETER PIPES AND LARGER

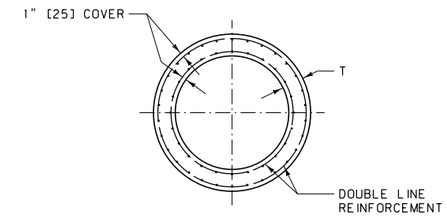

SECTION A-A

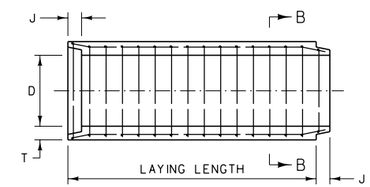

TYPICAL LONGITUDINAL SECTION

33" [825] DIAMETER PIPES AND SMALLER

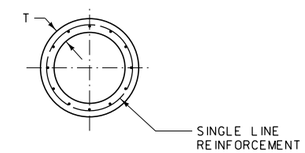

SECTION B-B

METRIC DIMENSION TABLE

DIA. D	XSEC. WATER AREA (m^2)	WT. PER m OF PIPE (kg)	T ✱ MIN. WALL THICKNESS	J LENGTH OF JOINT	A (NOMINAL) = $\frac{D2 - D1}{2}$	D1	D2	D3	D4
300	0.073	136.9	50.8	44.45	4.76	336.55	346.08	352.43	361.95
375	0.114	189.0	57.2	50.80	4.76	419.10	428.63	438.15	447.68
450	0.164	250.0	63.5	57.15	4.76	498.48	508.00	517.53	527.05
525	0.223	318.5	69.9	63.50	4.76	581.03	590.55	603.25	612.78
600	0.292	394.4	76.2	69.85	4.76	660.40	669.93	685.80	695.33
675	0.369	479.2	82.6	76.20	4.76	742.95	752.48	768.35	777.88
750	0.456	571.5	88.9	82.55	4.76	822.33	831.85	850.90	860.43
825	0.552	672.6	95.3	88.90	6.35	901.70	914.40	933.45	946.15
900	0.657	779.8	101.6	95.25	6.35	984.25	996.95	1016.00	1028.70
1050	0.894	1019.4	114.3	101.60	6.35	1146.18	1152.53	1181.10	1193.80
1200	1.167	1290.2	127.0	107.95	6.35	1308.10	1320.80	1346.20	1358.90
1350	1.478	1592.3	139.7	114.30	6.35	1470.03	1482.73	1508.13	1520.83
1500	1.824	1928.7	152.4	127.00	6.35	1631.95	1644.65	1676.40	1689.10
1650	2.207	2294.7	165.1	139.70	6.35	1793.88	1806.58	1841.50	1854.20
1800	2.627	2693.6	177.8	152.40	6.35	1955.80	1968.50	2006.60	2019.30
1950	3.083	3122.2	190.5	165.10	6.35	2117.73	2130.43	2174.88	2192.87
2100	3.575	3586.5	203.2	177.80	6.35	2279.65	2292.35	2339.98	2352.68
2250	4.104	4077.6	215.9	177.80	6.35	2432.05	2444.75	2492.38	2505.08
2400	4.670	4390.1	228.6	177.80	6.35	2593.98	2606.68	2654.30	2667.00
2550	5.272	4576.1	241.3	190.50	6.35	2768.60	2781.30	2832.10	2844.80
2700	5.910	5759.2	254.0	190.50	6.35	2933.70	2946.40	2997.20	3009.90

NOTE: ALL DIMENSIONS ARE IN MILLIMETERS UNLESS OTHERWISE NOTED

✱ WALL "B" THICKNESS

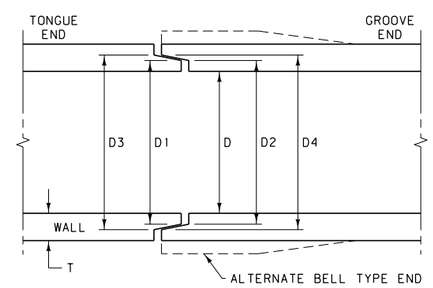

JOINT DETAIL

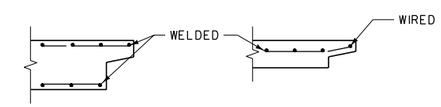

REINFORCING AT ENDS OF PIPE

NOTES:

PROVIDE TOLERANCES IN DIMENSIONS PER SECTION 708.

TYPICAL FOR DRAINAGE APPLICATIONS.

UNITS SHOWN IN BRACKETS [] ARE METRIC AND ARE IN MILLIMETERS (mm) UNLESS OTHER UNITS ARE SHOWN.

DETAILED DRAWING	
REFERENCE STANDARD SPEC. SECTION 603, 708	DWG. NO. 603-24
REINFORCED CONCRETE PIPE JOINT	
EFFECTIVE: SEPTEMBER 2014	
MDT MONTANA DEPARTMENT OF TRANSPORTATION	

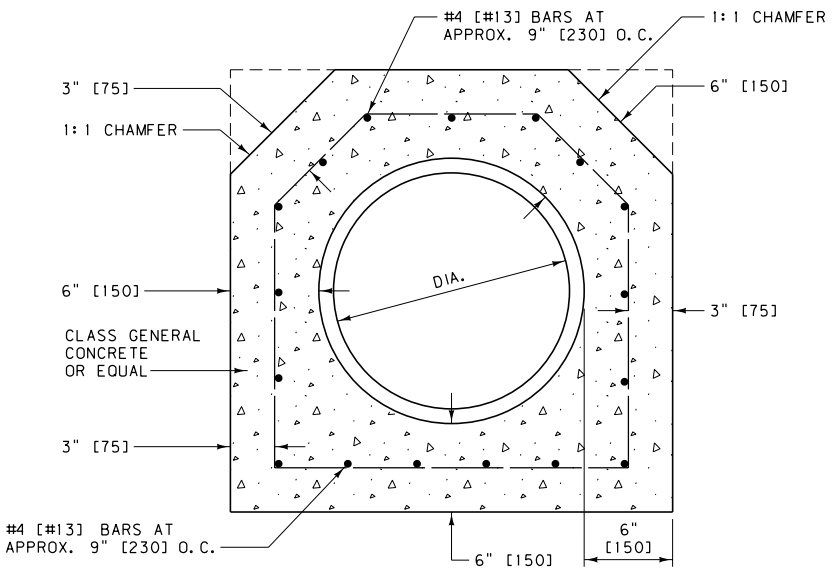

SECTION A-A

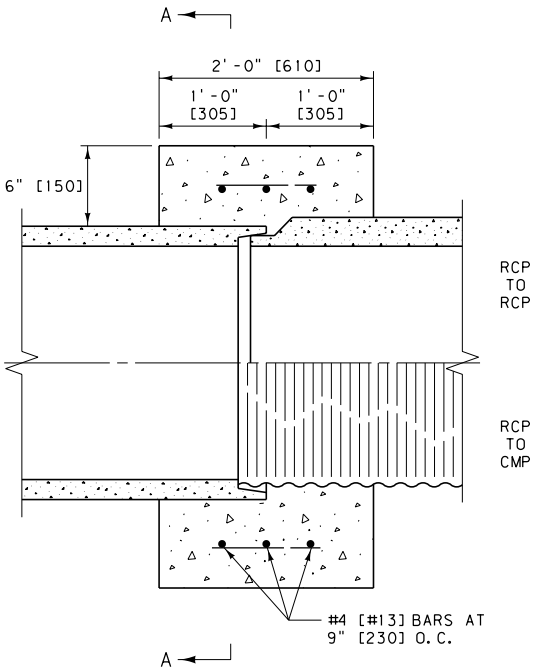

CONNECTION DETAILS

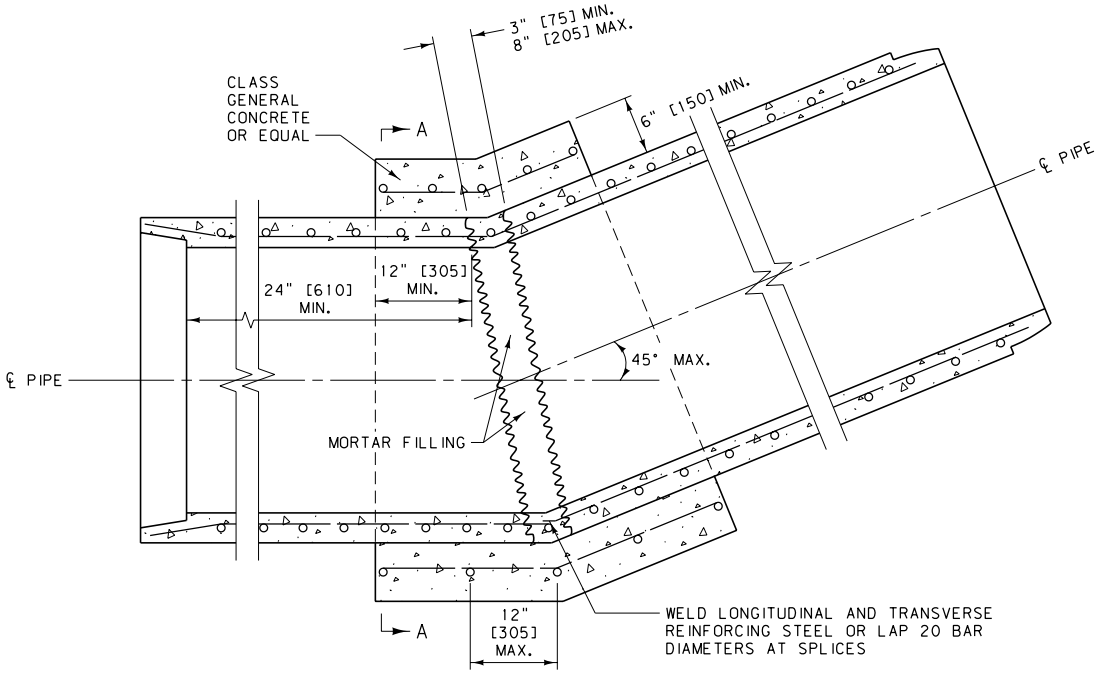

TYPICAL FIELD CAST CONCRETE BEND

UNITS SHOWN IN BRACKETS [] ARE METRIC AND ARE IN MILLIMETERS (mm) UNLESS OTHER UNITS ARE SHOWN.

DETAILED DRAWING	
REFERENCE STANDARD SPEC. SECTION 603, 708	DWG. NO. 603-26
TYPICAL FIELD CAST CONCRETE CONNECTIONS	
EFFECTIVE: SEPTEMBER 2014	
MDT MONTANA DEPARTMENT OF TRANSPORTATION	

ADAPTER RING - TIE BOLT DETAIL

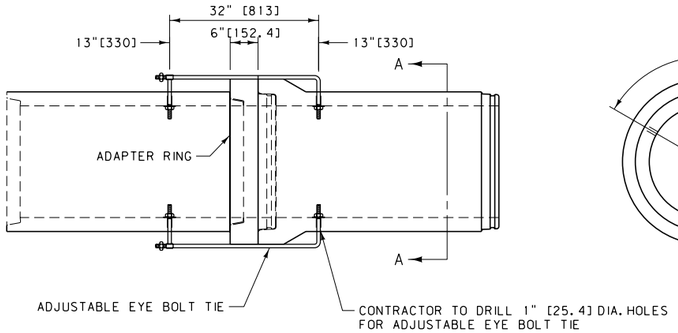

PLAN VIEW

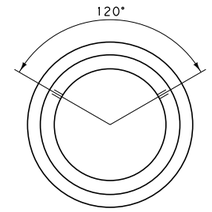

SECTION A-A

NOTES:

1. PART NUMBER 11051-A FURNISH WITH ADJUSTING NUT ONLY, ALL OTHERS AS SHOWN
2. BOLTS PAINTED WITH ZINC CHROMATE IRON OXIDE
3. PAINT STANDARD ROLLED THREADS ON ALL BOLTS
4. RODS MAY BE HOT BENT
5. FOR 18" [457] RCP USE 42-54 EYE BOLT TIE
6. FOR 24" [610] RCP USE 60-66 EYE BOLT TIE

ADJUSTABLE EYE BOLT TIE

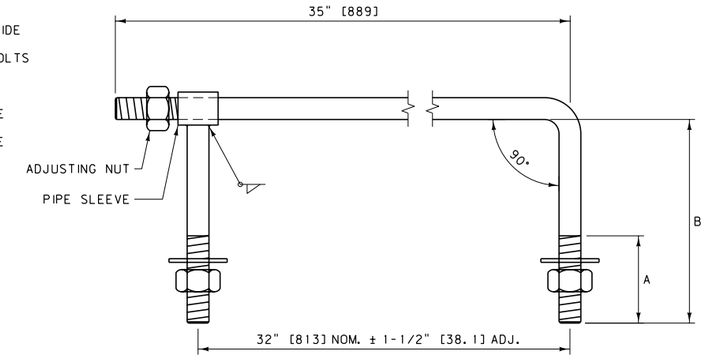

PART NO.	PIPE SIZE *	WALL THK.	P/N	THREAD DIA.	A	B	ROD DIA.
					in	in	
11051-A	12"-27"	2"-3.5"	091000	5/8"	0	4	9/16"
11051-D	30"-36"	3.5"-4"	091004	3/4"	3	5.5	11/16"
11051-G	42"-54"	4.5"-5.5"	091008	3/4"	3	7	11/16"
11051-J	60"-66"	6"-6.5"	091012	3/4"	3	8.5	11/16"
11051-M	72"-84"	7"-8"	091016	1"	3	10.5	29/32"
11051-O	90"-102"	8.5"-9.5"	091019	1"	3	12	29/32"
11051-Q	108"-120"	10"	091022	1"	3	13	29/32"

* BASED ON 'B' WALL ROUND PIPE AND EQUIVALENT SIZE ARCH PIPE

PART NO.	PIPE SIZE *	WALL THK.	P/N	THREAD DIA.	A	B	ROD DIA.
					mm	mm	
11051-A	300-675	50.8-88.9	091000	15.88	0.0	101.6	14.29
11051-D	750-900	88.9-101.6	091004	19.05	76.2	139.7	17.46
11051-G	1050-1350	114.3-139.7	091008	19.05	76.2	177.8	17.46
11051-J	1500-1650	152.4-165.1	091012	19.05	76.2	215.9	17.46
11051-M	1800-2100	177.8-203.2	091016	25.4	76.2	266.7	23.02
11051-O	2250-2550	215.9-241.3	091019	25.4	76.2	304.8	23.02
11051-Q	2700-3000	254.0	091022	25.4	76.2	330.2	23.02

* BASED ON 'B' WALL ROUND PIPE AND EQUIVALENT SIZE ARCH PIPE

18" [457] CTX ADAPTER RING

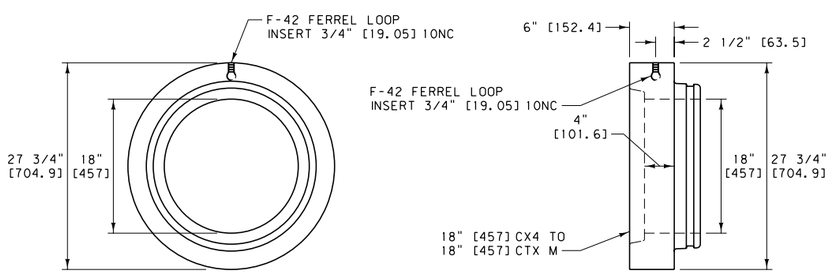

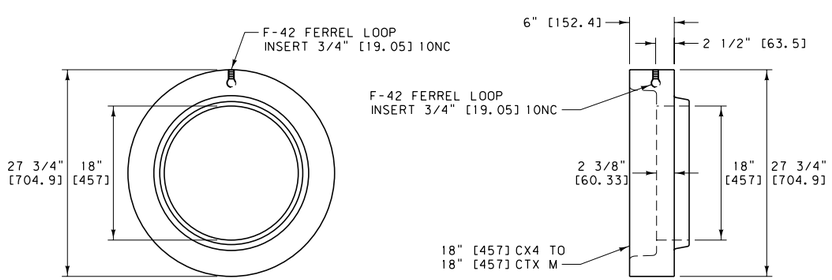

NOTES:

1. PRODUCED PER ASTM C76
2. CL5 REINFORCING, TYPE 5 CEMENT

24" [610] CTX ADAPTER RING

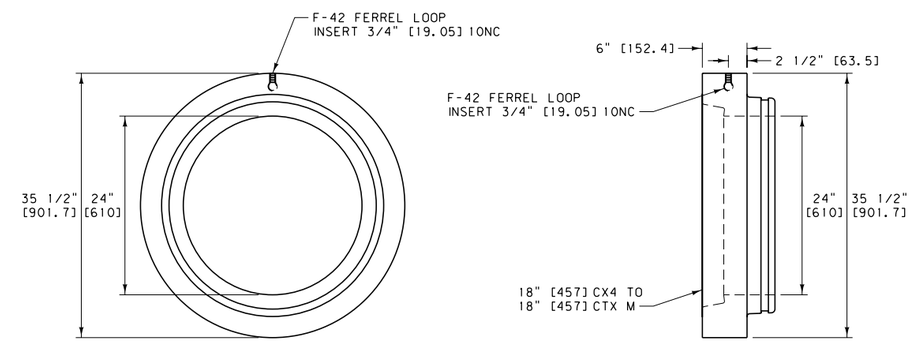

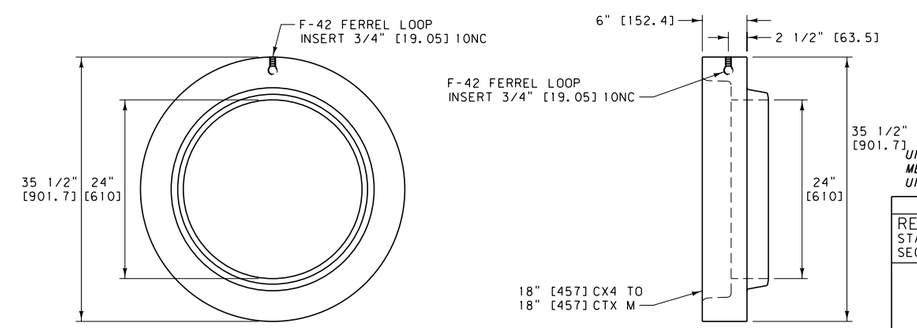

UNITS SHOWN IN BRACKETS [] ARE METRIC AND ARE IN MILLIMETERS (mm) UNLESS OTHER UNITS ARE SHOWN.

DETAILED DRAWING	
REFERENCE STANDARD SPEC. SECTION 603	DWG. NO. 603-27
CTX ADAPTER	
EFFECTIVE: SEPTEMBER 2014	

MDT MONTANA DEPARTMENT OF TRANSPORTATION

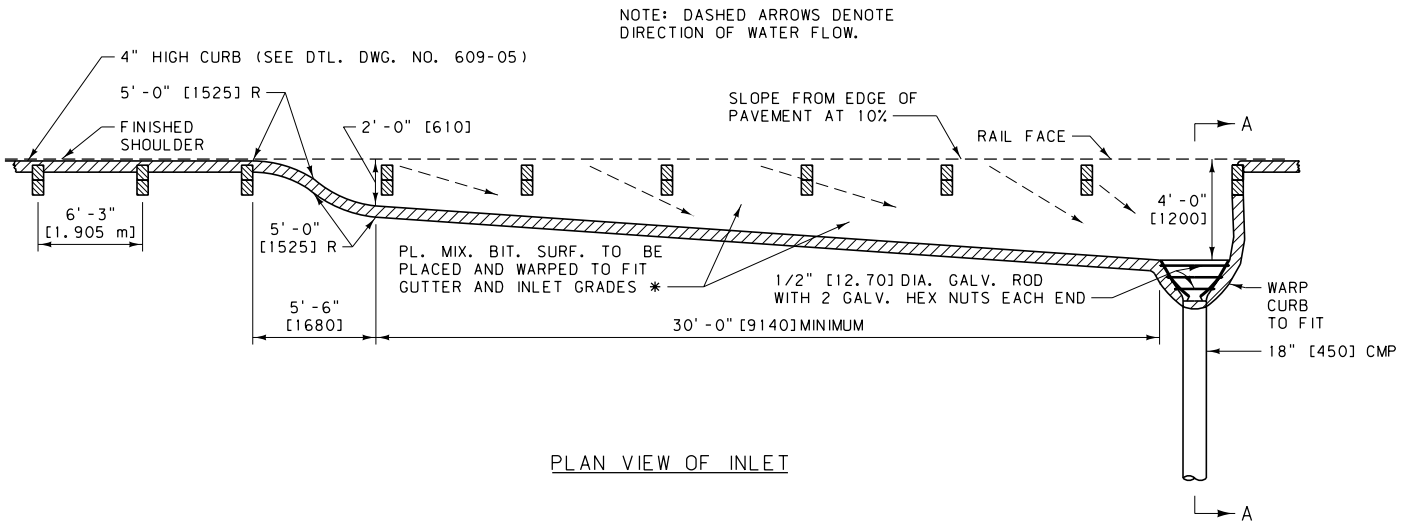

PLAN VIEW OF INLET

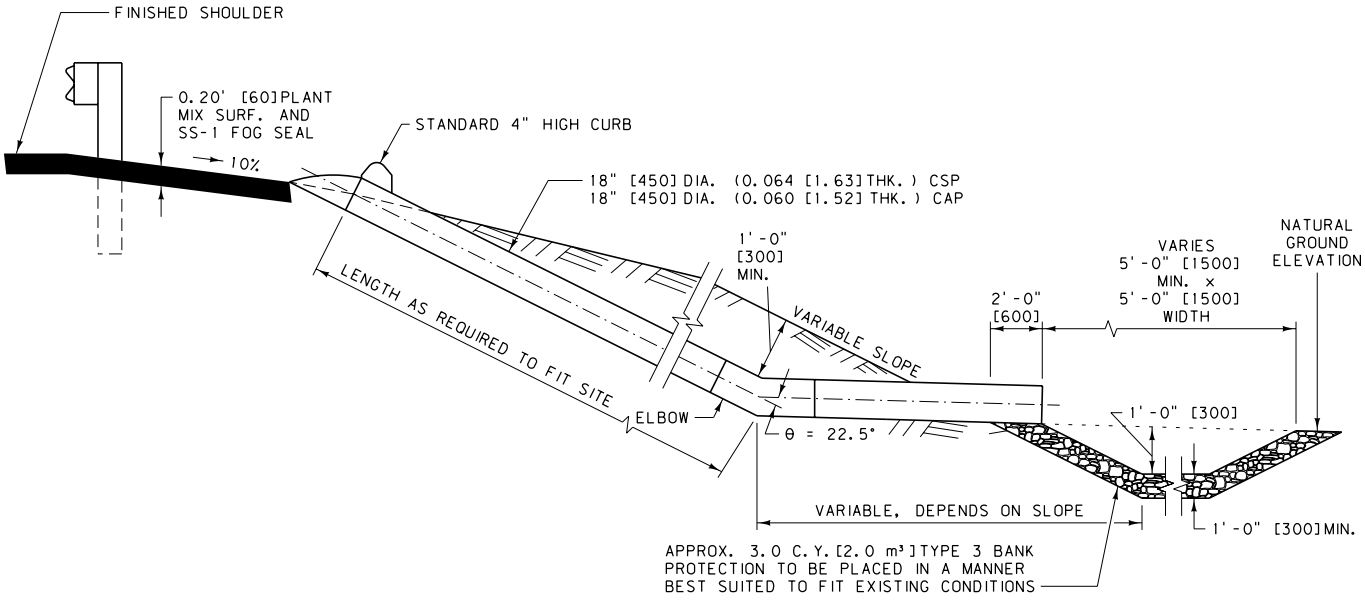

OUTLET DETAIL

SECTION A-A

NOTES:

① CORRUGATION MAY BE EITHER ANNULAR OR HELICAL. BEND ON ELBOW (θ) IS AS SHOWN UNLESS OTHERWISE SPECIFIED IN THE PLANS OR BY THE PROJECT MANAGER.

② THE COST OF SS-1 FOG SEAL IS INCLUDED IN THE COST OF PLANT MIX SURFACING.

* INCLUDED WITH ROADWAY QUANTITIES.

UNITS SHOWN IN BRACKETS [] ARE METRIC AND ARE IN MILLIMETERS (mm) UNLESS OTHER UNITS ARE SHOWN.

DETAILED DRAWING	
REFERENCE STANDARD SPEC. SECTION 603	DWG. NO. 603-28
EMBANKMENT PROTECTOR	
EFFECTIVE: SEPTEMBER 2014	
MDT MONTANA DEPARTMENT OF TRANSPORTATION	

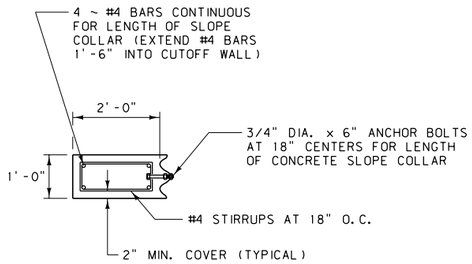

NOTE:
SEE DTL. DWG. NO. 552-00 FOR ANCHOR BOLT DETAILS.

SECTION C-C

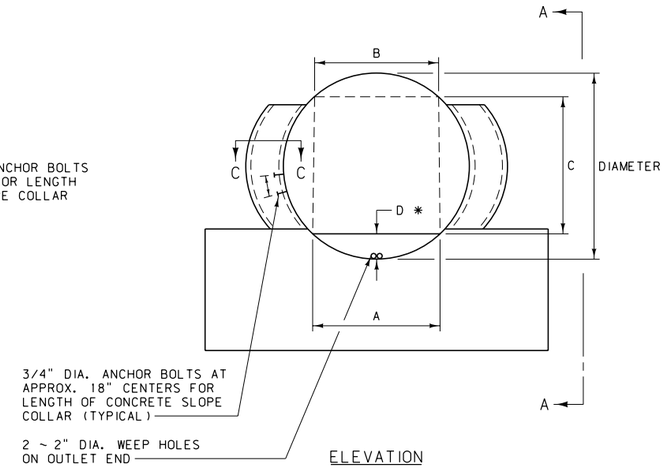

ELEVATION

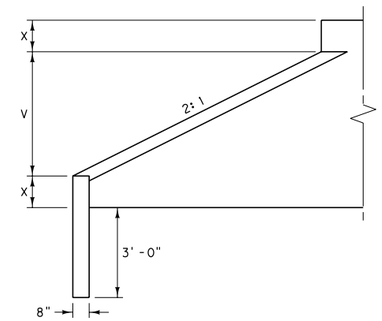

SECTION A-A

NOTES:

1. DESIGNATE THESE STRUCTURES, IN PLANS AND PROPOSAL, AS "VEHICULAR UNDERPASS." USE THE TERM "VEHICULAR UNDERPASS," REGARDLESS OF THE USE OR PURPOSE OF THE STRUCTURE.
2. PROVIDE END TREATMENT FOR ALL VEHICULAR UNDERPASSES INCLUDING CUTOFF WALLS, BACKFILL RETAINING WALLS AND CONCRETE SLOPE COLLARS.
3. PROVIDE SURFACING FOR THE INSIDE OF THE STRUCTURE, CROSS-SLOPED TO ALLOW A DRAINAGE COURSE DOWN THE CENTERLINE.
4. FOR PLATE THICKNESS SEE ROAD DESIGN MANUAL FILL HEIGHT TABLES.
5. USE CLASS GENERAL CONCRETE OR EQUAL.
6. SEE DTL. DWG. NO. 552-08 FOR QUANTITIES.
7. SEE DTL. DWG. NO. 603-31 FOR ALTERNATIVE "C" PCCP TRANSVERSE JOINT AND BACKFILL RETAINER DETAILS.

DEPTH OF SURFACING ✱

MATERIAL	ALTERNATE "A"	ALTERNATE "B"	ALTERNATE "C"
PL. MIX SURF.	—	0.20'	—
PORT. CEM. CONC. PAVE.	—	—	0.67'
CRUSHED AGGREGATE COURSE	BAL.	BAL.	BAL.

DIAMETER	A	B	C	V	X	D ✱	BACKFILL RETAINER (C.Y.)	CONCRETE COLLAR (C.Y.)
96"	4'	4'	6.9'	4.0'	2.0'	0.5'	0.04	0.66
120"	7'	7'	7.1'	5.0'	2.5'	1.4'	0.17	0.82
150"	10'	8'	8.6'	6.25'	3.13'	2.5'	0.43	1.08
162"	10'	8'	10.0'	6.75'	3.38'	2.2'	0.38	1.16
186"	12'	10'	10.8'	7.75'	3.88'	2.9'	0.59	1.34
192"	12'	10'	11.5'	8.0'	4.0'	2.7'	0.55	1.38
204"	12'	10'	12.9'	8.5'	4.25'	2.5'	0.51	1.46
216"	12'	10'	14.2'	9.0'	4.50'	2.3'	0.47	1.54
228"	16'	12'	12.5'	9.5'	4.75'	4.4'	1.23	1.72
240"	16'	12'	14.0'	10.0'	5.0'	4.0'	1.10	1.72

SURFACING QUANTITIES PER LINEAR FOOT FOR DEPTH "D" ✱

	ALTERNATE "A"	ALTERNATE "B"						ALTERNATE "C"	
	C.Y. SURFACING	TONS SURFACING		C.Y. SURFACING	TONS BIT. MATL.			C.Y. SURFACING	S.Y. SURFACING
DIAMETER	CRUSHED AGGREGATE COURSE	COVER MATERIAL	PLANT MIX	CRUSHED AGGREGATE COURSE	PLANT MIX	PRIME	SEAL	CRUSHED AGGREGATE COURSE	PORT. CEM. CONCRETE PAVEMENT
96"	0.054	0.0056	0.052	0.027	0.0031	0.0005	0.0007	—	0.444
120"	0.255	0.0097	0.097	0.205	0.0058	0.0009	0.0012	0.096	0.778
150"	0.647	0.0139	0.141	0.574	0.0084	0.0014	0.0017	0.413	1.111
162"	0.563	0.0139	0.140	0.489	0.0084	0.0014	0.0017	0.332	1.111
186"	0.882	0.0167	0.169	0.794	0.0102	0.0017	0.0020	0.615	1.333
192"	0.830	0.0167	0.168	0.744	0.0101	0.0016	0.0020	0.550	1.333
204"	0.769	0.0167	0.169	0.680	0.0102	0.0016	0.0020	0.486	1.333
216"	0.702	0.0167	0.168	0.615	0.0101	0.0016	0.0020	0.423	1.333
228"	1.842	0.0222	0.227	1.725	0.0136	0.0022	0.0026	1.453	1.778
240"	1.656	0.0222	0.226	1.539	0.0136	0.0022	0.0026	1.273	1.778

BACKFILL RETAINER & CUTOFF WALL DETAIL

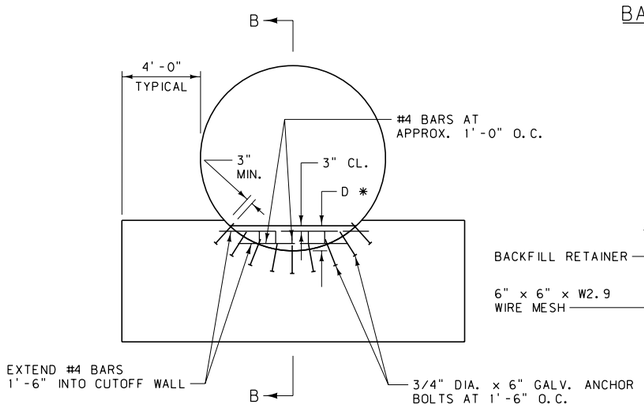

ELEVATION

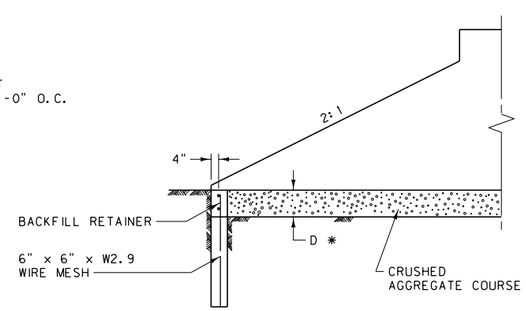

SECTION B-B
(ALTERNATE "A")

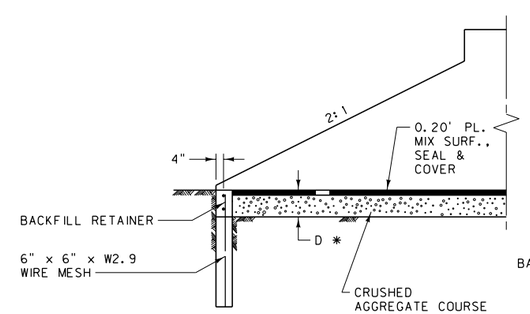

SECTION B-B
(ALTERNATE "B")

NOTE:
INCLUDE CONCRETE COLLAR WHEN SPECIFIED.

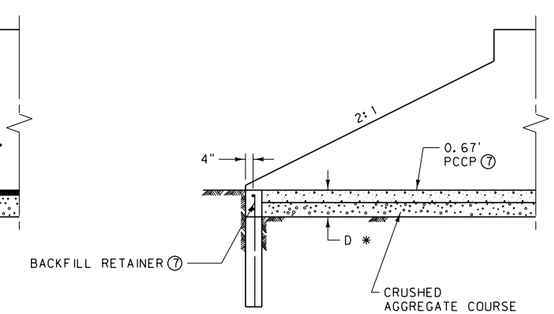

SECTION B-B
(ALTERNATE "C")

DETAILED DRAWING

REFERENCE STANDARD SPEC. SECTION 552, 603 — DWG. NO. 603-30

VEHICULAR UNDERPASS AND BACKFILL RETAINER & CUTOFF WALL DETAIL

EFFECTIVE: SEPTEMBER 2014

MDT MONTANA DEPARTMENT OF TRANSPORTATION

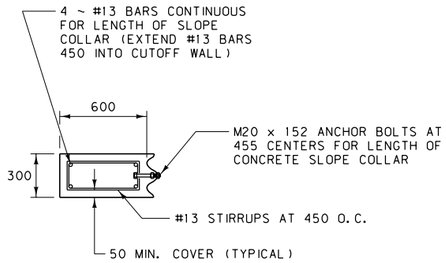

NOTE:
SEE DTL. DWG. NO. 552-00 FOR ANCHOR BOLT DETAILS.

SECTION C-C

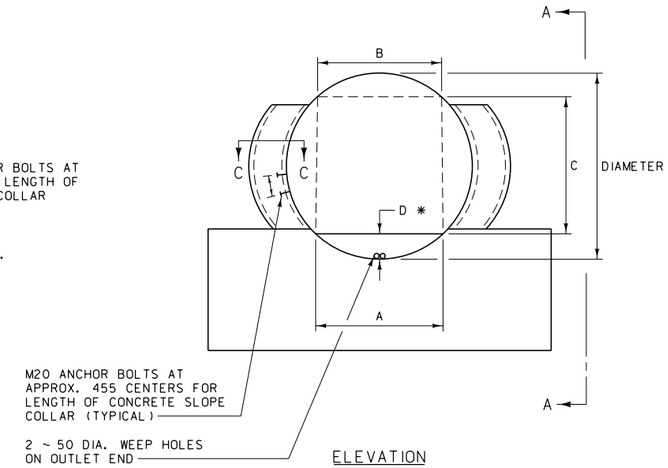

ELEVATION

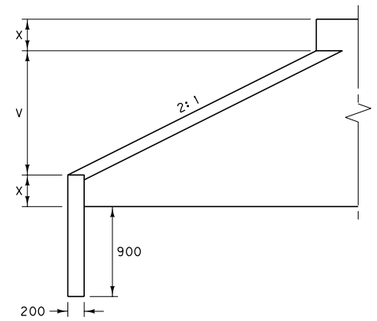

SECTION A-A

NOTES:

1. DESIGNATE THESE STRUCTURES, IN PLANS AND PROPOSAL, AS "VEHICULAR UNDERPASS." USE THE TERM "VEHICULAR UNDERPASS," REGARDLESS OF THE USE OR PURPOSE OF THE STRUCTURE.
2. PROVIDE END TREATMENT FOR ALL VEHICULAR UNDERPASSES INCLUDING CUTOFF WALLS, BACKFILL RETAINING WALLS AND CONCRETE SLOPE COLLARS.
3. PROVIDE SURFACING FOR THE INSIDE OF THE STRUCTURE, CROSS-SLOPED TO ALLOW A DRAINAGE COURSE DOWN THE CENTERLINE.
4. FOR PLATE THICKNESS SEE ROAD DESIGN MANUAL FILL HEIGHT TABLES.
5. USE CLASS GENERAL CONCRETE OR EQUAL.
6. SEE DTL. DWG. NO. 552-08 FOR QUANTITIES.
7. SEE DTL. DWG. NO. 603-31 FOR ALTERNATIVE "C" PCCP TRANSVERSE JOINT AND BACKFILL RETAINER DETAILS.

DEPTH OF SURFACING ✱			
MATERIAL	ALTERNATE "A"	ALTERNATE "B"	ALTERNATE "C"
PL. MIX SURF.	—	60	—
PORT. CEM. CONC. PAVE.	—	—	203
CRUSHED AGGREGATE COURSE	BAL.	BAL.	BAL.

DIAMETER	A (m)	B (m)	C (m)	V (m)	X (m)	D ✱	BACKFILL RETAINER (m³)	CONCRETE COLLAR (m³)
2400	1.2	1.2	2.078	1.200	0.600	173	0.03	0.50
3000	2.1	2.1	2.142	1.500	0.750	441	0.13	0.63
3.825 m	3.0	2.4	2.683	1.916	0.957	750	0.32	0.80
4.135 m	3.0	2.4	3.114	2.071	1.035	669	0.28	0.87
4.755 m	3.6	3.0	3.407	2.381	1.190	848	0.43	1.00
4.910 m	3.6	3.0	3.622	2.459	1.229	809	0.41	1.03
5.220 m	3.6	3.0	4.035	2.613	1.307	744	0.38	1.10
5.530 m	3.6	3.0	4.431	2.770	1.384	690	0.35	1.16
5.840 m	4.8	3.6	3.975	2.924	1.462	1279	0.87	1.23
6.150 m	4.8	3.6	4.428	3.079	1.540	1176	0.80	1.29

SURFACING QUANTITIES PER METER FOR DEPTH "D" ✱									
	ALTERNATE "A"	ALTERNATE "B"						ALTERNATE "C"	
	m³ SURFACING	TONS SURFACING		m³ SURFACING	TONS BIT. MATL.			m³ SURFACING	m² SURFACING
DIAMETER	CRUSHED AGGREGATE COURSE	COVER MATERIAL	PLANT MIX	CRUSHED AGGREGATE COURSE	PLANT MIX	PRIME	SEAL	CRUSHED AGGREGATE COURSE	PORT. CEM. CONCRETE PAVEMENT
2400	0.147	0.0175	0.158	0.078	0.0095	0.0015	0.0020	—	1.200
3000	0.649	0.0299	0.284	0.525	0.0170	0.0029	0.0034	0.259	2.100
3.825 m	1.604	0.0429	0.414	1.423	0.0248	0.0042	0.0049	0.998	3.000
4.135 m	1.420	0.0430	0.414	1.239	0.0248	0.0042	0.0049	0.822	3.000
4.755 m	2.159	0.0513	0.496	1.942	0.0298	0.0051	0.0059	1.429	3.600
4.910 m	2.056	0.0514	0.496	1.839	0.0298	0.0051	0.0059	1.327	3.600
5.220 m	1.882	0.0514	0.496	1.665	0.0298	0.0051	0.0059	1.159	3.600
5.530 m	1.741	0.0515	0.496	1.524	0.0298	0.0050	0.0059	1.023	3.600
5.840 m	4.368	0.0681	0.661	4.079	0.0397	0.0068	0.0078	3.372	4.800
6.150 m	3.985	0.0681	0.661	3.696	0.0397	0.0068	0.0078	2.998	4.800

BACKFILL RETAINER & CUTOFF WALL DETAIL

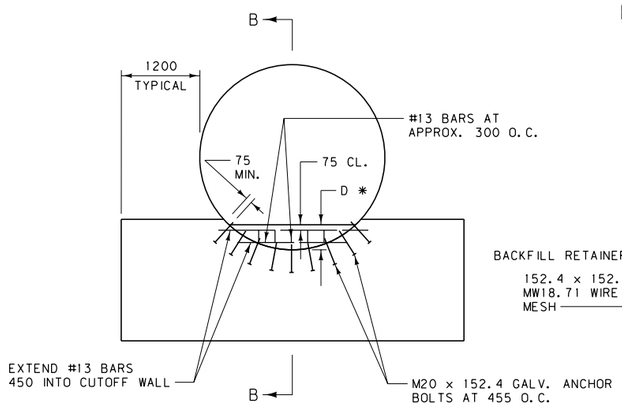

ELEVATION

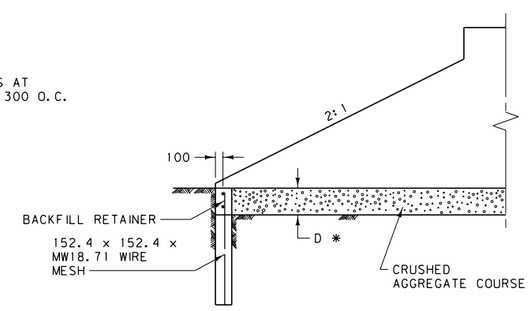

SECTION B-B
(ALTERNATE "A")

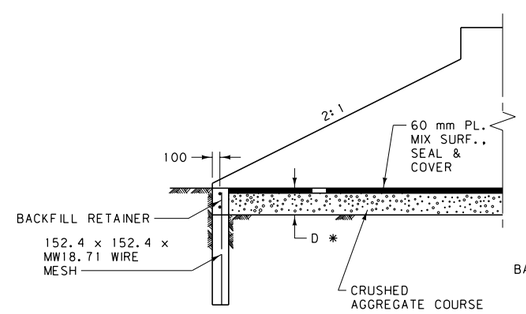

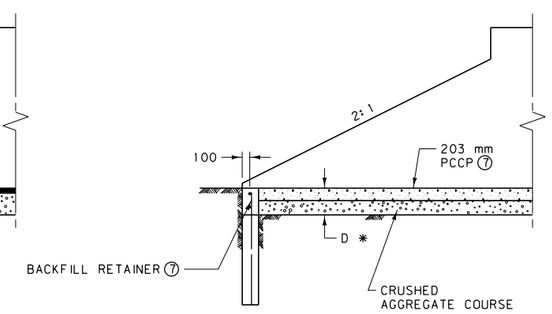

NOTE:
INCLUDE CONCRETE COLLAR WHEN SPECIFIED.

SECTION B-B
(ALTERNATE "C")

ALL DIMENSIONS ARE MILLIMETERS (mm) UNLESS OTHERWISE NOTED.

DETAILED DRAWING	
REFERENCE STANDARD SPEC. SECTION 552, 603	DWG. NO. 603-30
VEHICULAR UNDERPASS AND BACKFILL RETAINER & CUTOFF WALL DETAIL (METRIC)	
EFFECTIVE: SEPTEMBER 2014	

MDT MONTANA DEPARTMENT OF TRANSPORTATION

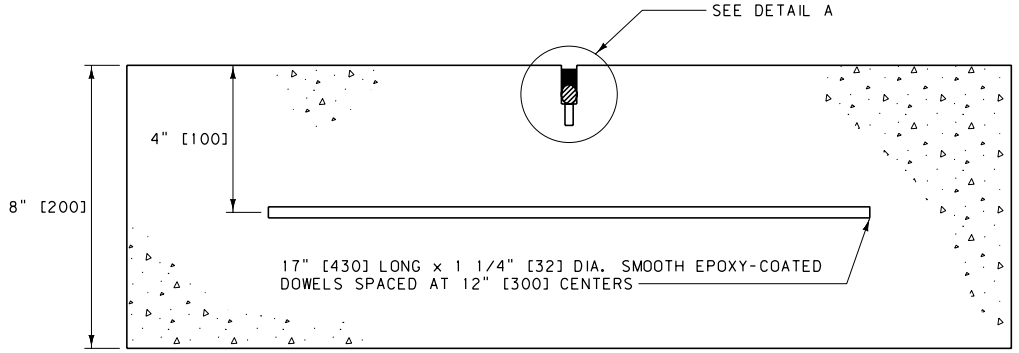

TRANSVERSE CONTRACTION JOINT (15' [4.5 m] O.C.)

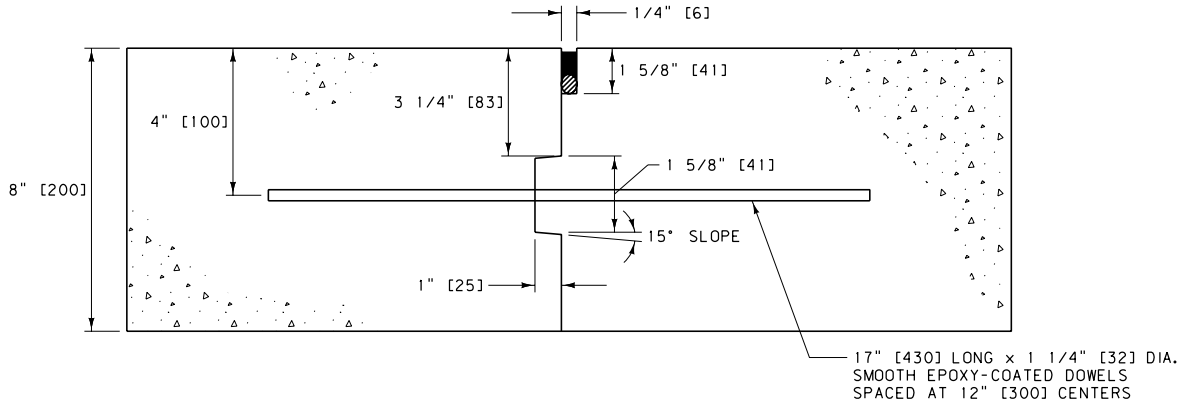

TRANSVERSE CONTRACTION JOINT (AS NEEDED)

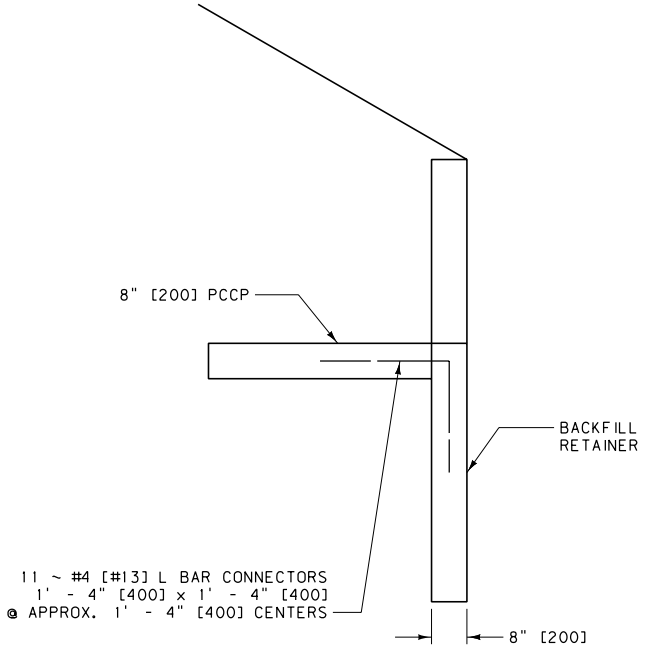

TYPICAL BOTH ENDS

REINFORCING STEEL FOR INLET
BACKFILL RETAINER ℄ PCCP SLAB

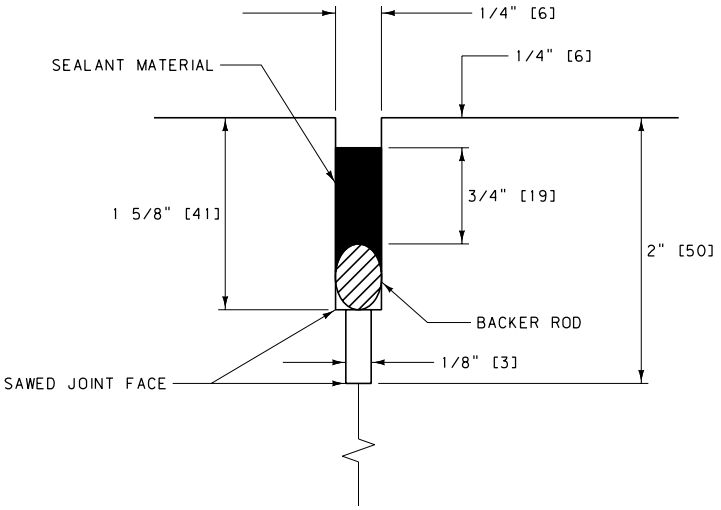

DETAIL A

SAWED TRANSVERSE OR LONGITUDINAL
JOINT WITH HOT POURED SEALANT

UNITS SHOWN IN BRACKETS [] ARE METRIC AND ARE IN MILLIMETERS (mm) UNLESS OTHER UNITS ARE SHOWN.

DETAILED DRAWING	
REFERENCE STANDARD SPEC. SECTION 603	DWG. NO. 603-31
VEHICULAR UNDERPASS PCCP TRANSVERSE JOINT & BACKFILL RETAINER DETAILS	
EFFECTIVE: SEPTEMBER 2014	
MDT MONTANA DEPARTMENT OF TRANSPORTATION	

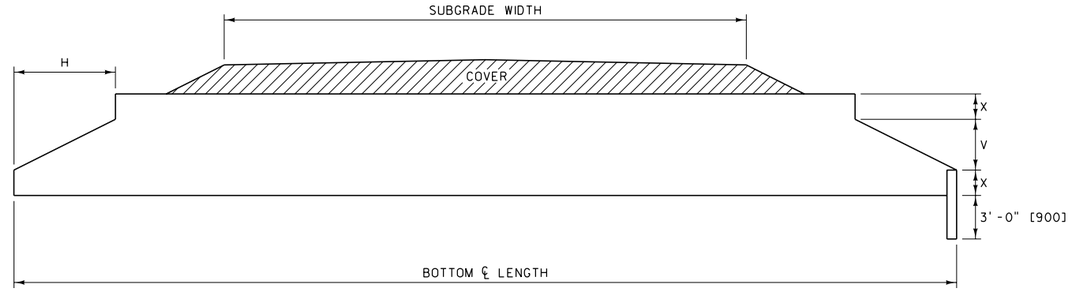

DIMENSIONS					
DIA.	X (FT.)	V (FT.)	H (FT.) FOR BEVELS: 1.5:1	H (FT.) FOR BEVELS: 2:1	AREA "A" (SQ. FT.) *
CSP 3" x 1" OR 5" x 1" CORRUGATIONS (SEE NOTE ③)					
54"	1.125	2.250	3.375	4.500	3.31
60"	1.250	2.500	3.750	5.000	4.06
66"	1.375	2.750	4.125	5.500	4.89
72"	1.500	3.000	4.500	6.000	5.79
78"	1.625	3.250	4.875	6.500	6.77
84"	1.750	3.500	5.250	7.000	7.83
90"	1.875	3.750	5.625	7.500	8.97
96"	2.000	4.000	6.000	8.000	10.18
102"	2.125	4.250	6.375	8.500	11.47
108"	2.250	4.500	6.750	9.000	12.83
114"	2.375	4.750	7.125	9.500	14.27
120"	2.500	5.000	7.500	10.000	15.79
SSPP 6" x 2" CORRUGATIONS					
10'-6"	2.625	5.250	7.875	10.500	17.39
11'-0"	2.750	5.500	8.250	11.000	19.06
11'-6"	2.875	5.750	8.625	11.500	20.81
12'-0"	3.000	6.000	9.000	12.000	22.64
12'-6"	3.125	6.250	9.375	12.500	24.54
13'-0"	3.250	6.500	9.750	13.000	26.52
13'-6"	3.375	6.750	10.125	13.500	28.58
14'-0"	3.500	7.000	10.500	14.000	30.71
14'-6"	3.625	7.250	10.875	14.500	32.92
15'-0"	3.750	7.500	11.250	15.000	35.21
15'-6"	3.875	7.750	11.625	15.500	37.57
16'-0"	4.000	8.000	12.000	16.000	40.01
16'-6"	4.125	8.250	12.375	16.500	42.53
17'-0"	4.250	8.500	12.750	17.000	45.12
17'-6"	4.375	8.750	13.125	17.500	47.79
18'-0"	4.500	9.000	13.500	18.000	50.54
19'-0"	4.750	9.500	14.250	19.000	56.26
20'-0"	5.000	10.000	15.000	20.000	62.29
21'-0"	5.250	10.500	15.750	21.000	68.63

* AREA "A" IS TO THE MIDDLE OF THE CORRUGATIONS.

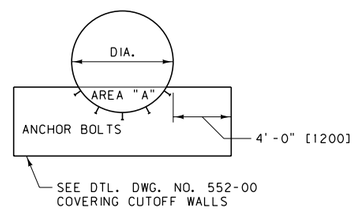

NOTES:

① BEVEL TO TOP OF CORNER PLATE.

② PIPE ENDS ARE SQUARE (PERPENDICULAR TO CENTERLINE OF PIPE) AND FILL SLOPES ARE WARPED TO ACCOMMODATE THE SQUARE ENDS UNLESS SPECIFIED OTHERWISE ON PLANS.

③ TABULATED VALUES BASED ON NOMINAL PIPE DIMENSIONS. IN PLACE DIMENSIONS SUBJECT TO TOLERANCE REQUIREMENTS OF SECTION 709.

METRIC DIMENSIONS					
DIA. #	X (m)	V (m)	H (m) FOR BEVELS: 1.5:1	H (m) FOR BEVELS: 2:1	AREA "A" (m^2) *
CSP 75 x 25 OR 125 x 25 CORRUGATIONS (SEE NOTE ③)					
1350 mm	0.338	0.674	1.011	1.348	0.30
1500 mm	0.375	0.750	1.125	1.500	0.37
1650 mm	0.412	0.826	1.239	1.652	0.44
1800 mm	0.450	0.900	1.350	1.800	0.52
1950 mm	0.488	0.974	1.461	1.948	0.61
2100 mm	0.525	1.050	1.575	2.100	0.70
2250 mm	0.563	1.124	1.686	2.248	0.81
2400 mm	0.600	1.200	1.800	2.400	0.92
2550 mm	0.637	1.276	1.914	2.552	1.03
2700 mm	0.675	1.350	2.025	2.700	1.15
2850 mm	0.712	1.426	2.139	2.852	1.28
3000 mm	0.750	1.500	2.250	3.000	1.42
SSPP 152 x 51 CORRUGATIONS					
3.205 m	0.802	1.605	2.408	3.210	1.67
3.360 m	0.841	1.682	2.523	3.364	1.83
3.515 m	0.880	1.760	2.640	3.520	2.00
3.670 m	0.919	1.837	2.756	3.674	2.17
3.825 m	0.957	1.916	2.874	3.832	2.36
3.980 m	0.996	1.993	2.990	3.986	2.55
4.135 m	1.035	2.071	3.107	4.142	2.74
4.290 m	1.074	2.148	3.222	4.296	2.95
4.445 m	1.113	2.225	3.338	4.450	3.16
4.600 m	1.152	2.302	3.453	4.604	3.38
4.755 m	1.190	2.381	3.572	4.762	3.61
4.910 m	1.229	2.459	3.689	4.918	3.84
5.065 m	1.268	2.536	3.804	5.072	4.09
5.220 m	1.307	2.613	3.920	5.226	4.34
5.375 m	1.346	2.690	4.035	5.380	4.59
5.530 m	1.384	2.770	4.155	5.540	4.86
5.685 m	1.423	2.847	4.271	5.694	5.13
5.840 m	1.462	2.924	4.386	5.848	5.41
5.995 m	1.501	3.001	4.502	6.002	5.69
6.150 m	1.540	3.079	4.619	6.158	5.99
6.305 m	1.578	3.158	4.737	6.316	6.29
6.460 m	1.617	3.235	4.853	6.470	6.60

* AREA "A" IS TO THE MIDDLE OF THE CORRUGATIONS.

NOMINAL DIAMETER

UNITS SHOWN IN BRACKETS [] ARE METRIC AND ARE IN MILLIMETERS (mm) UNLESS OTHER UNITS ARE SHOWN.

DETAILED DRAWING

REFERENCE STANDARD SPEC. SECTION 552, 603, 709

DWG. NO. 603-32

STEP BEVEL FOR CIRCULAR METAL CULVERT

EFFECTIVE: SEPTEMBER 2014

MDT MONTANA DEPARTMENT OF TRANSPORTATION

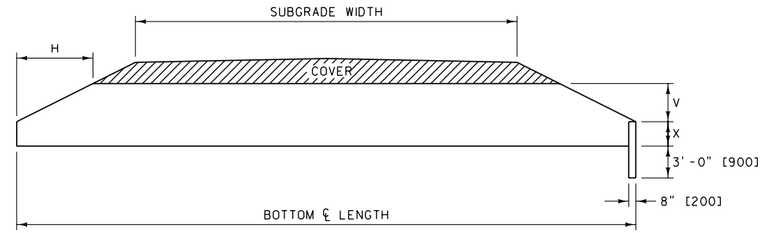

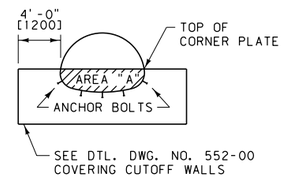

NOTES:

① BEVEL TO TOP OF CORNER PLATE.

② PIPE ENDS ARE SQUARE (PERPENDICULAR TO CENTERLINE OF PIPE) AND FILL SLOPES ARE WARPED TO ACCOMMODATE THE SQUARE ENDS UNLESS SPECIFIED OTHERWISE ON PLANS.

③ TABULATED VALUES BASED ON NOMINAL PIPE DIMENSIONS. IN PLACE DIMENSIONS SUBJECT TO TOLERANCE REQUIREMENTS OF SECTION 709.

DIMENSIONS								
SPAN	RISE	EQUIV. DIA.	X (FT.)	V (FT.)	H (FT.) FOR BEVELS:			AREA "A" (SQ. FT.)
					1.5:1	2:1	2.5:1	
SSPPA 6" x 2" CORRUGATIONS WITH 18" CORNER RADIUS								
6'-1"	4'-7"	66"	2.3	2.3	3.4	4.6	5.7	12.8
6'-9"	4'-11"	72"	2.4	2.5	3.8	5.0	6.3	14.8
7'-3"	5'-3"	78"	2.1	3.2	4.7	6.3	7.9	14.1
7'-11"	5'-7"	84"	2.3	3.3	4.9	6.6	8.2	16.8
8'-7"	5'-11"	90"	2.3	3.6	5.4	7.2	9.0	18.0
9'-4"	6'-3"	96"	2.5	3.8	5.6	7.5	9.4	21.0
9'-9"	6'-7"	102"	2.2	4.4	6.6	8.8	11.0	19.8
10'-8"	6'-11"	108"	2.8	4.1	6.2	8.2	10.3	26.6
11'-5"	7'-3"	114"	2.8	4.5	6.7	8.9	11.1	27.9
11'-10"	7'-7"	120"	2.5	5.1	7.6	10.2	13.6	26.4
12'-6"	7'-11"	126"	2.7	5.2	7.8	10.4	13.0	30.0
12'-10"	8'-4"	132"	2.3	6.0	8.9	11.9	14.9	26.9
SSPPA 6" x 2" CORRUGATIONS WITH 31" CORNER RADIUS								
13'-3"	9'-4"	~	3.9	5.5	8.2	10.9	13.6	45.7
13'-6"	9'-6"	~	3.8	5.7	8.6	11.5	14.3	45.7
14'-0"	9'-8"	144"	4.0	5.7	8.5	11.4	14.2	49.1
14'-3"	9'-10"	~	3.8	6.1	9.1	12.1	15.2	47.6
14'-5"	10'-0"	~	3.7	6.3	9.5	12.7	15.9	47.4
14'-11"	10'-2"	~	4.0	6.2	9.3	12.4	15.5	52.4
15'-4"	10'-4"	156"	4.3	6.0	9.1	12.1	15.1	57.6
15'-7"	10'-6"	~	4.1	6.4	9.6	12.8	16.1	55.9
15'-10"	10'-8"	~	3.9	6.8	10.2	13.6	17.0	54.2
16'-3"	10'-10"	~	4.3	6.5	9.8	13.1	16.4	61.1
16'-6"	11'-0"	168"	4.1	6.9	10.4	13.9	17.3	59.4
17'-0"	11'-2"	~	4.4	6.8	10.2	13.6	17.0	64.7
17'-2"	11'-4"	~	4.3	7.1	10.6	14.1	17.6	64.6
17'-5"	11'-6"	~	4.1	7.4	11.2	14.9	18.6	62.6
17'-11"	11'-8"	180"	4.3	7.4	11.1	14.8	18.5	66.6
18'-1"	11'-10"	~	4.2	7.7	11.5	15.3	19.2	66.4
18'-7"	12'-0"	~	4.5	7.5	11.3	15.0	18.8	72.2
18'-9"	12'-2"	~	4.3	7.9	11.8	15.8	19.7	70.1
19'-3"	12'-4"	192"	4.6	7.7	11.6	15.5	19.4	76.3
19'-6"	12'-6"	~	4.4	8.1	12.2	16.3	20.3	74.1
19'-8"	12'-8"	~	4.3	8.4	12.6	16.8	21.0	73.7
19'-11"	12'-10"	~	4.1	8.8	13.2	17.6	22.0	71.3
20'-5"	13'-0"	204"	4.4	8.6	12.9	17.3	21.6	77.6
20'-7"	13'-2"	~	4.3	8.9	13.4	17.8	22.3	77.2

DIMENSIONS								
SPAN	RISE	EQUIV. DIA.	X (FT.)	V (FT.)	H (FT.) FOR BEVELS:			AREA "A" (SQ. FT.)
					1.5:1	2:1	2.5:1	
CSPA 3" x 1" CORRUGATIONS (SEE NOTE ③)								
60"	46"	54"	1.7	2.3	3.5	4.7	5.8	7.1
66"	51"	60"	1.9	2.6	3.9	5.2	6.5	8.7
73"	55"	66"	2.1	2.8	4.1	5.5	6.9	10.7
81"	59"	72"	2.0	3.2	4.8	6.5	8.1	11.1
87"	63"	78"	2.1	3.5	5.2	6.9	8.6	13.2
95"	67"	84"	2.3	3.7	5.5	7.3	9.2	15.3
103"	71"	90"	2.5	3.9	5.8	7.7	9.6	17.8
112"	75"	96"	2.6	4.1	6.1	8.1	10.2	20.2
117"	79"	102"	2.8	4.3	6.4	8.5	10.7	23.1
128"	83"	108"	3.0	4.5	6.7	8.9	11.2	25.9
137"	87"	114"	3.1	4.7	7.0	9.4	11.7	29.0
142"	91"	120"	3.3	4.9	7.3	9.7	12.2	32.2
CSPA 2 2/3" x 1/2" CORRUGATIONS (SEE NOTE ③)								
57"	38"	48"	1.1	2.1	3.1	4.2	5.2	4.5
64"	43"	54"	1.2	2.4	3.5	4.7	5.9	5.6
71"	47"	60"	1.4	2.6	3.8	5.1	6.4	6.9
77"	52"	66"	1.5	2.8	4.3	5.7	7.1	8.2
83"	57"	72"	1.6	3.1	4.7	6.3	7.8	9.6

METRIC DIMENSIONS							
SPAN (mm)	RISE (mm)	X (m)	V (m)	H (m) FOR BEVELS:			AREA "A" (m²)
				1.5:1	2:1	2.5:1	
CSPA 75 x 25 CORRUGATIONS (SEE NOTE ③)							
1010	790	0.330	0.460	0.690	0.920	~	0.29
1160	920	0.395	0.525	0.788	1.050	~	0.40
1340	1050	0.385	0.665	0.998	1.330	~	0.38
1520	1170	0.520	0.650	0.975	1.300	~	0.65
1670	1300	0.580	0.720	1.080	1.440	~	0.80
1850	1400	0.640	0.760	1.140	1.520	~	0.99
2050	1500	0.605	0.895	1.343	1.790	~	1.03
2200	1620	0.655	0.965	1.448	1.930	~	1.22
2400	1720	0.705	1.015	1.523	2.030	~	1.42
2600	1820	0.755	1.065	1.598	2.130	~	1.65
2840	1920	0.805	1.115	1.673	2.230	~	1.88
2970	2020	0.855	1.165	1.748	2.330	~	2.14
3240	2120	0.905	1.215	1.823	2.430	~	2.40
3470	2220	0.955	1.265	1.898	2.530	~	2.69
3600	2320	1.005	1.315	1.973	2.630	~	2.99
CSPA 68 x 13 CORRUGATIONS (SEE NOTE ③)							
1440	970	0.330	0.640	0.960	1.280	~	0.41
1620	1100	0.370	0.730	1.095	1.460	~	0.52
1800	1200	0.415	0.785	1.178	1.570	~	0.64
1950	1320	0.455	0.865	1.298	1.730	~	0.76
2100	1450	0.495	0.955	1.433	1.910	~	0.89

METRIC DIMENSIONS							
SPAN (m)	RISE (m)	X (m)	V (m)	H (m) FOR BEVELS:			AREA "A" (m²)
				1.5:1	2:1	2.5:1	
SSPPA 152 x 51 CORRUGATIONS WITH 457 CORNER RADIUS							
1.850	1.400	0.533	0.867	1.301	1.734	2.168	0.88
1.930	1.450	0.521	0.929	1.394	1.858	2.323	0.91
2.060	1.500	0.559	0.941	1.412	1.882	2.353	1.01
2.130	1.550	0.544	1.006	1.509	2.012	2.515	1.04
2.210	1.600	0.528	1.072	1.608	2.144	2.680	1.06
2.340	1.650	0.569	1.081	1.622	2.162	2.703	1.18
2.410	1.700	0.551	1.149	1.724	2.298	2.873	1.19
2.490	1.750	0.531	1.219	1.829	2.438	3.048	1.21
2.620	1.800	0.577	1.223	1.835	2.446	3.058	1.34
2.690	1.850	0.556	1.294	1.941	2.588	3.235	1.35
2.840	1.910	0.605	1.305	1.958	2.610	3.263	1.50
2.900	1.960	0.582	1.378	2.067	2.756	3.445	1.50
2.970	2.010	0.556	1.454	2.181	2.908	3.635	1.50
3.120	2.060	0.610	1.450	2.175	2.900	3.625	1.66
3.250	2.110	0.663	1.447	2.171	2.894	3.618	1.85
3.330	2.160	0.638	1.522	2.283	3.044	3.805	1.84
3.480	2.210	0.696	1.514	2.271	3.028	3.785	2.04
3.530	2.260	0.668	1.592	2.388	3.184	3.980	2.03
3.610	2.310	0.640	1.670	2.505	3.340	4.175	2.01
3.760	2.360	0.698	1.662	2.493	3.324	4.155	2.22
3.810	2.410	0.671	1.739	2.609	3.478	4.348	2.20
3.860	2.460	0.640	1.820	2.730	3.640	4.550	2.17
3.910	2.540	0.610	1.930	2.895	3.860	4.825	2.13
4.090	2.570	0.671	1.899	2.849	3.798	4.748	2.37
SSPPA 152 x 51 CORRUGATIONS WITH 787 CORNER RADIUS							
4.040	2.840	1.189	1.651	2.477	3.302	4.128	4.25
4.110	2.900	1.158	1.742	2.613	3.484	4.355	4.21
4.270	2.950	1.219	1.731	2.597	3.462	4.328	4.56
4.320	3.000	1.158	1.842	2.763	3.684	4.605	4.42
4.390	3.050	1.128	1.922	2.883	3.844	4.805	4.40
4.550	3.100	1.219	1.881	2.822	3.762	4.703	4.87
4.670	3.150	1.311	1.839	2.759	3.678	4.598	5.35
4.750	3.200	1.250	1.950	2.925	3.900	4.875	5.20
4.830	3.250	1.189	2.061	3.092	4.122	5.153	5.03
4.950	3.300	1.311	1.989	2.984	3.978	4.973	5.68
5.030	3.350	1.250	2.100	3.150	4.200	5.250	5.52
5.180	3.400	1.341	2.059	3.089	4.118	5.148	6.02
5.230	3.450	1.311	2.139	3.209	4.278	5.348	6.00
5.310	3.510	1.250	2.260	3.390	4.520	5.650	5.82
5.460	3.560	1.311	2.249	3.374	4.498	5.623	6.18
5.510	3.610	1.280	2.330	3.495	4.660	5.825	6.17
5.660	3.660	1.372	2.288	3.432	4.576	5.720	6.71
5.720	3.710	1.311	2.399	3.599	4.798	5.998	6.51
5.870	3.760	1.402	2.358	3.537	4.716	5.895	7.08
5.940	3.810	1.341	2.469	3.704	4.938	6.173	6.88
5.990	3.860	1.311	2.549	3.824	5.098	6.373	6.84
6.070	3.910	1.250	2.660	3.990	5.320	6.650	6.63
6.220	3.960	1.341	2.619	3.929	5.238	6.548	7.21
6.270	4.010	1.311	2.699	4.049	5.398	6.748	7.17

UNITS SHOWN IN BRACKETS [] ARE METRIC AND ARE IN MILLIMETERS (mm) UNLESS OTHER UNITS ARE SHOWN.

DETAILED DRAWING

REFERENCE
STANDARD SPEC.
SECTION 603, 709

DWG. NO.
603-34

BEVEL ON ARCH
METAL CULVERT

EFFECTIVE: SEPTEMBER 2014

MDT MONTANA DEPARTMENT OF TRANSPORTATION

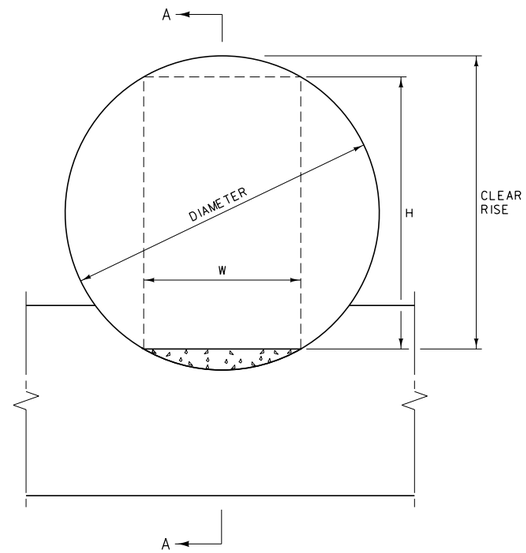

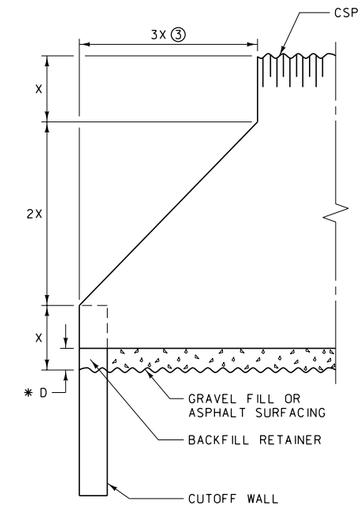

SECTION A-A

DIMENSIONS						
DIAMETER	X	* D	CLEAR RISE	H	W	BACKFILL RETAINER (CUBIC YARDS)
84"	21.0"	0.50'	6.5'	6.0'	3.6'	0.1
90"	22.5"	0.75'	6.75'	6.0'	4.5'	0.1
96"	24.0"	0.83'	7.17'	6.34'	4.9'	0.1

METRIC DIMENSIONS						
DIAMETER (mm)	X (m)	* D (mm)	CLEAR RISE (m)	H (m)	W (m)	BACKFILL RETAINER (m^3)
2100	0.525	168	1.944	1.789	1.1	0.03
2250	0.563	257	2.006	1.761	1.4	0.05
2400	0.600	276	2.137	1.873	1.5	0.06

* SURFACING QUANTITIES PER LINEAR FOOT FOR DEPTH "D"					
	FULL DEPTH GRAVEL	0.20' PMS AND REMAINING DEPTH GRAVEL			
	C.Y. SURF.	TONS SURF.	C.Y. SURF.	TONS BIT. MATERIAL	
DIAMETER	CR. TOP SURF.	PLANT MIX	CR. TOP SURF.	PLANT MIX	PRIME
84"	0.045	0.046	0.021	0.0028	0.0004
90"	0.085	0.060	0.054	0.0036	0.0006
96"	0.102	0.066	0.068	0.0040	0.0006

NOTES:

① UNLESS OTHERWISE SPECIFIED, INSTALL STOCKPASSES WITH CUTOFF WALLS AND BACKFILL RETAINERS AT EACH END, GRAVEL FILL AND BEDDING MATERIAL.

② WHEN COMBINATION STOCKPASSES AND DRAINS ARE SPECIFIED, INSTALL WITH CUTOFF WALLS, BACKFILL RETAINERS AT BOTH ENDS, CONCRETE EDGE PROTECTION AT THE INLET END, RANDOM RIPRAP AT THE OUTLET END, BEDDING MATERIAL AND ASPHALT SURFACING; CROSS SLOPE ASPHALT SURFACING TO ALLOW DRAINAGE COURSE ALONG ONE SIDE. (SEE DTL. DWG. NO. 613-14 AND 613-06.)

③ UNLESS OTHERWISE SPECIFIED, STEP BEVEL PIPE ENDS AT A 1.5:1 SLOPE.

④ THE MINIMUM THICKNESS FOR 84" [2100]DIAMETER AND 90" [2250]DIAMETER CORRUGATED STEEL PIPE STOCKPASS IS 0.079" [2.01]. THE MINIMUM THICKNESS FOR 96" [2400]DIAMETER CORRUGATED STEEL PIPE STOCKPASS IS 0.109" [2.77]. (SEE FILL HEIGHT TABLES FOR OTHER THAN THE MINIMUM REQUIREMENTS.)

⑤ SEE DTL. DWG. NO. 552-00, 603-30 AND 603-19.

* METRIC SURFACING QUANTITIES PER METER FOR DEPTH "D"					
	FULL DEPTH GRAVEL	60 mm PMS AND REMAINING DEPTH GRAVEL			
	m^3 SURF.	TONS SURF.	m^3 SURF.	TONS BIT. MATERIAL	
DIAMETER (mm)	CR. TOP SURF.	PLANT MIX	CR. TOP SURF.	PLANT MIX	PRIME
2100	0.131	0.144	0.068	0.0086	0.0013
2250	0.253	0.188	0.171	0.0113	0.0018
2400	0.291	0.201	0.203	0.0121	0.0020

UNITS SHOWN IN BRACKETS [] ARE METRIC AND ARE IN MILLIMETERS (mm) UNLESS OTHER UNITS ARE SHOWN.

DETAILED DRAWING

REFERENCE STANDARD SPEC. SECTION 603

DWG. NO. 603-36

CORRUGATED STEEL PIPE STOCKPASS

EFFECTIVE: SEPTEMBER 2014

MDT MONTANA DEPARTMENT OF TRANSPORTATION

MEDIAN INLET

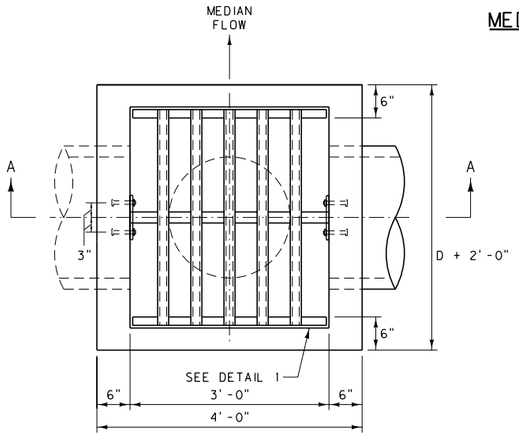

PLAN VIEW

TYPICAL FOR TYPES 1, 2 AND 3

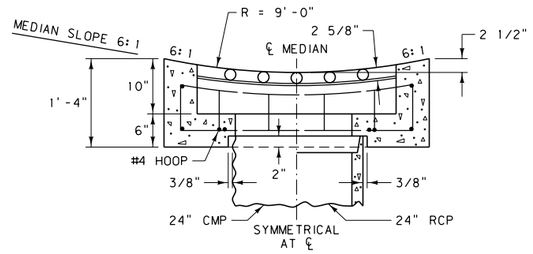

SECTION A-A

TYPE 1

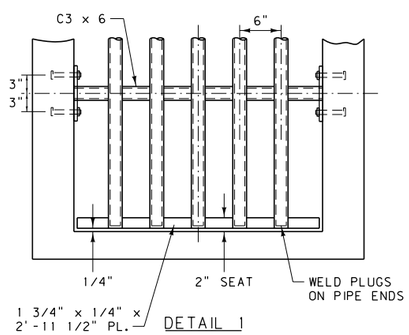

DETAIL 1

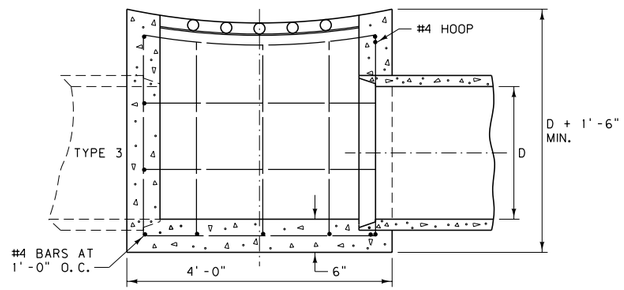

SECTION A-A

TYPE 2 HAS 1 PIPE CONNECTION
TYPE 3 HAS 2 PIPE CONNECTIONS

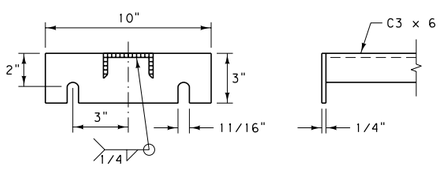

DETAIL 2

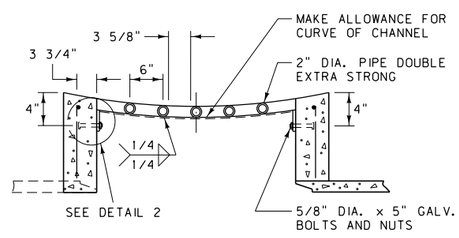

COVER DETAIL

TYPES 2 & 3

GRATE AND REINFORCING STEEL (LB.) ✱			
TYPE	CMP AND RCP		
	24"	30"	36"
1	50	~	~
2	85	95	105
3	85 ⊛	95 ⊛	105 ⊛
GRATE	165	185	210

CLASS GENERAL CONCRETE OR EQUAL (C.Y.) ✱						
TYPE	24"		30"		36"	
	CMP	RCP	CMP	RCP	CMP	RCP
1	0.4	0.4	~	~	~	~
2	1.0	1.0	1.1	1.0	1.2	1.1
3	0.9 ⊛	0.9 ⊛	1.0 ⊛	0.9 ⊛	1.0 ⊛	0.9 ⊛

✱ QUANTITIES ARE FOR ESTIMATING PURPOSES ONLY.
⊛ TYPE 3 IS A SPECIAL CASE TO BE FIGURED FOR THE PARTICULAR INSTALLATION.

NOTE:
① PAINT ALL EXPOSED METAL PARTS WITH ONE COAT OF ZINC RICH PAINT AND TWO COATS OF ALUMINUM PAINT PER SECTION 710.

② WHEN MEDIAN INLET COVER IS INSTALLED OVER PIPES LARGER THAN 36", WITHOUT ADEQUATE COVER TO PERMIT THE USE OF TYPE 1 INSTALLATION, PROVIDE A DETAIL OF THE INSTALLATION IN THE PLANS.

METRIC MEDIAN INLET

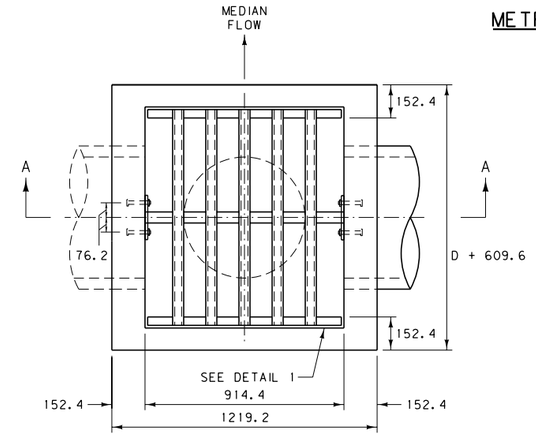

PLAN VIEW

TYPICAL FOR TYPES 1, 2 AND 3

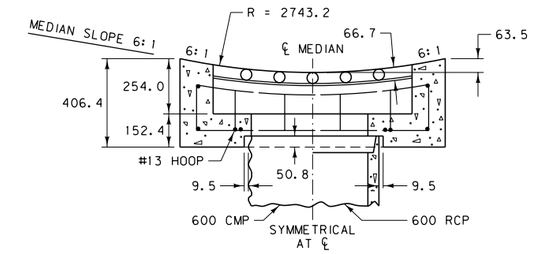

SECTION A-A

TYPE 1

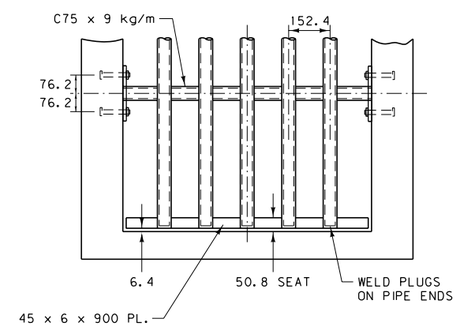

DETAIL 1

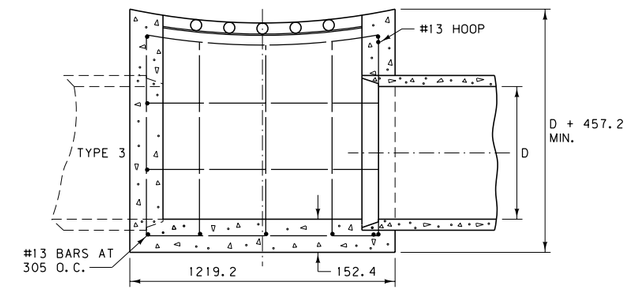

SECTION A-A

TYPE 2 HAS 1 PIPE CONNECTION
TYPE 3 HAS 2 PIPE CONNECTIONS

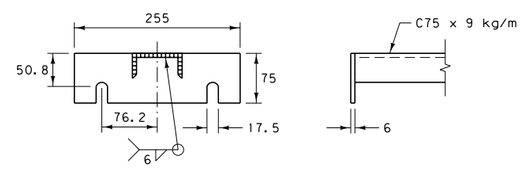

DETAIL 2

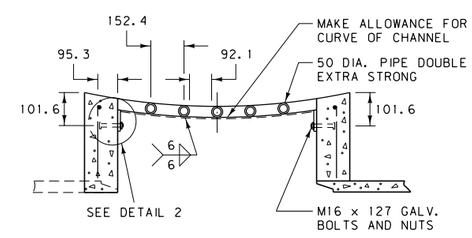

COVER DETAIL

TYPES 2 & 3

GRATE AND REINFORCING STEEL (kg) ✱			
TYPE	CMP AND RCP		
	600 mm	750 mm	900 mm
1	22.7	~	~
2	38.6	43.1	47.6
3	38.6 ⊛	43.1 ⊛	47.6 ⊛
GRATE	74.8	83.9	95.3

CLASS GENERAL CONCRETE OR EQUAL (CUBIC METERS) ✱						
TYPE	600 mm		750 mm		900 mm	
	CMP	RCP	CMP	RCP	CMP	RCP
1	0.31	0.31	~	~	~	~
2	0.76	0.76	0.84	0.76	0.92	0.84
3	0.69 ⊛	0.69 ⊛	0.76 ⊛	0.69 ⊛	0.76 ⊛	0.69 ⊛

✱ QUANTITIES ARE FOR ESTIMATING PURPOSES ONLY.
⊛ TYPE 3 IS A SPECIAL CASE TO BE FIGURED FOR THE PARTICULAR INSTALLATION.

NOTE:
① PAINT ALL EXPOSED METAL PARTS WITH ONE COAT OF ZINC RICH PAINT AND TWO COATS OF ALUMINUM PAINT PER SECTION 710.

② WHEN MEDIAN INLET COVER IS INSTALLED OVER PIPES LARGER THAN 900 mm, WITHOUT ADEQUATE COVER TO PERMIT THE USE OF TYPE 1 INSTALLATION, PROVIDE A DETAIL OF THE INSTALLATION IN THE PLANS.

ALL DIMENSIONS ARE MILLIMETERS (mm) UNLESS OTHERWISE NOTED.

DETAILED DRAWING

REFERENCE STANDARD SPEC. SECTION 604, 710

DWG. NO. 604-00

MEDIAN INLET

EFFECTIVE: SEPTEMBER 2014

MDT MONTANA DEPARTMENT OF TRANSPORTATION

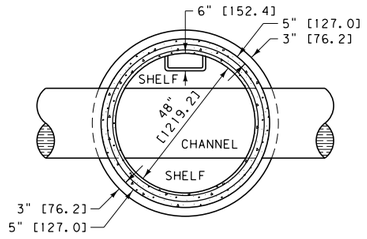

TYPE 1 SECTION A-A

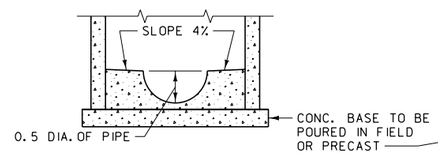

TYPE 1 SECTION B-B

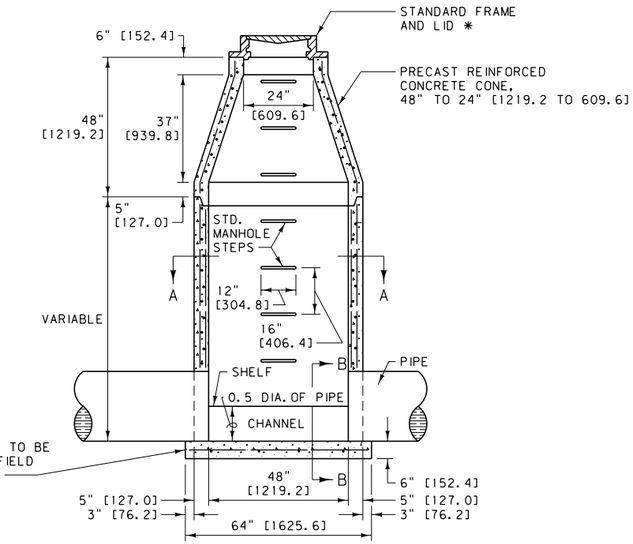

ELEVATION

TYPE 1 MANHOLE

* MINIMUM WEIGHT FOR FRAME AND LID IS 400 LB [180 kg]. TOOL RING AND COVER TO A MACHINE FIT. A LIGHTER FRAME AND LID MAY BE USED IF APPROVED BY THE FACILITY OWNER RESPONSIBLE FOR MAINTENANCE OF THE MANHOLE.

NOTES:

1. UPPER PART IS A CONE TO REDUCE DIAMETER FROM 48" TO 24" [1219.2 TO 609.6]. CUT BOTTOM OF LOWER SECTION SQUARE TO FIT BASE. GROUT JOINT BETWEEN BASE AND WALL. A GROUT CONSISTING OF ONE PART PORTLAND CEMENT AND TWO PARTS APPROVED SAND MAY BE USED; AN APPROVED PREMIXED GROUT, AVAILABLE COMMERCIALLY, MAY BE USED.
2. CONFORM ALL MANHOLE CONSTRUCTION, EXCEPT FRAME, LID, AND BASE, TO AASHTO M 199 [199M]. THIS PROVIDES THAT REINFORCEMENT MAY BE MADE OF (1) COLD DRAWN STEEL WIRE- AASHTO M 32 [32M], (2) STEEL WIRE FABRIC- AASHTO M 55 [55M], OR (3) STEEL BARS- AASHTO M 31 [31M].
3. THE CONSTRUCTION AND REINFORCEMENT OF THE BASE FOR EACH TYPE MUST BE COMPATIBLE WITH THE CONDITIONS AND THE WEIGHT OF THE SUPER-STRUCTURE. AASHTO M 199 [199M] PROVIDES FOR 4000 PSI [27.6 MPa] CONCRETE. THE MIX CALLS FOR 6 SACKS OF CEMENT PER CUBIC YARD [335 kg/m³]. REINFORCEMENT SHOWN IS ILLUSTRATIVE ONLY. SEE AASHTO M 199 [199M].
4. THE ECCENTRIC CONE TRANSITION WILL BE PERMITTED WHEN ITS USE WILL BE AS GOOD OR BETTER THAN THE ONES SHOWN, OR IF IT IS MORE ADAPTABLE TO EXISTING CONDITIONS.
5. USE MANHOLE STEPS THAT ARE METALLIC AND COATED WITH COPOLYMER POLYPROPYLENE, OR AN APPROVED EQUAL. THE MINIMUM DESIGN LIVE LOAD FOR A SINGLE CONCENTRATED LOAD IS 300 POUNDS [135 kg].

TYPE 3 MANHOLE ROOF SLAB					
PIPE DIA.	SLAB DIA.	T	K	BOTTOM BARS	TOP BARS
48"	58"	6"	6"	#4 AT 6"	~
54"	65"	8"	6"	#4 AT 6"	~
60"	72"	8"	7"	#4 AT 6"	#3 AT 6"
66"	79"	8"	7"	#4 AT 6"	#3 AT 6"
72"	86"	8"	8"	#4 AT 6"	#3 AT 6"
78"	93"	8"	8"	#4 AT 4"	#4 AT 4"
84"	100"	8"	9"	#4 AT 4"	#4 AT 4"
90"	107"	8"	9"	#4 AT 4"	#4 AT 4"
96"	114"	8"	9"	#5 AT 4"	#4 AT 4"
102"	121"	8"	9"	#5 AT 4"	#4 AT 4"

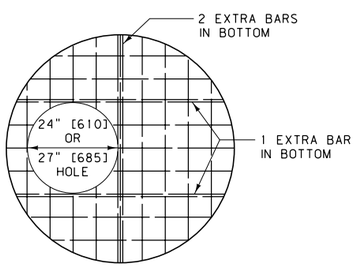

TYPE 3 MANHOLE ROOF SLAB

NOTE:

CENTER THE OPENING OVER THE ROOF SLAB FOR TYPE I, II, IV AND V INLETS ON 48" [1200] COMBINATION TYPE 3 MANHOLES.

TYPE 3 MANHOLE ROOF SLAB (METRIC)					
PIPE DIA.	SLAB DIA.	T	K	BOTTOM BARS	TOP BARS
1200	1473.2	152.4	152.4	#13 AT 150	~
1350	1651.0	203.2	152.4	#13 AT 150	~
1500	1828.8	203.2	177.8	#13 AT 150	#10 AT 150
1650	2006.6	203.2	177.8	#13 AT 150	#10 AT 150
1800	2184.4	203.2	203.2	#13 AT 150	#10 AT 150
1950	2362.2	203.2	203.2	#13 AT 100	#13 AT 100
2100	2540.0	203.2	228.6	#13 AT 100	#13 AT 100
2250	2717.8	203.2	228.6	#13 AT 100	#13 AT 100
2400	2895.6	203.2	228.6	#16 AT 100	#13 AT 100
2550	3073.4	203.2	228.6	#16 AT 100	#13 AT 100

NOTE: ALL DIMENSIONS ARE IN MILLIMETERS UNLESS OTHERWISE NOTED

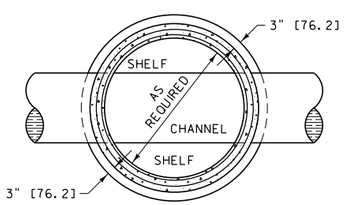

TYPE 3 SECTION A-A

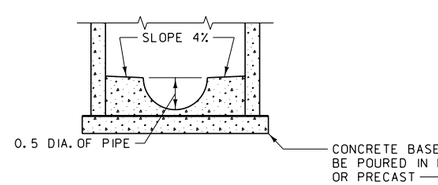

TYPE 3 SECTION B-B

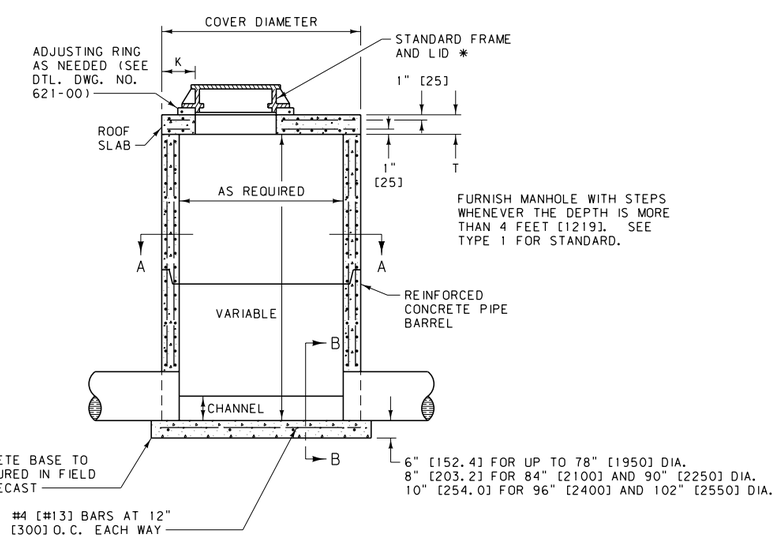

TYPE 3 MANHOLE

UNITS SHOWN IN BRACKETS [] ARE METRIC AND ARE IN MILLIMETERS (mm) UNLESS OTHER UNITS ARE SHOWN.

DETAILED DRAWING	
REFERENCE STANDARD SPEC. SECTION 604, 711	DWG. NO. 604-02
CONCRETE MANHOLE	
EFFECTIVE: SEPTEMBER 2014	

MDT MONTANA DEPARTMENT OF TRANSPORTATION

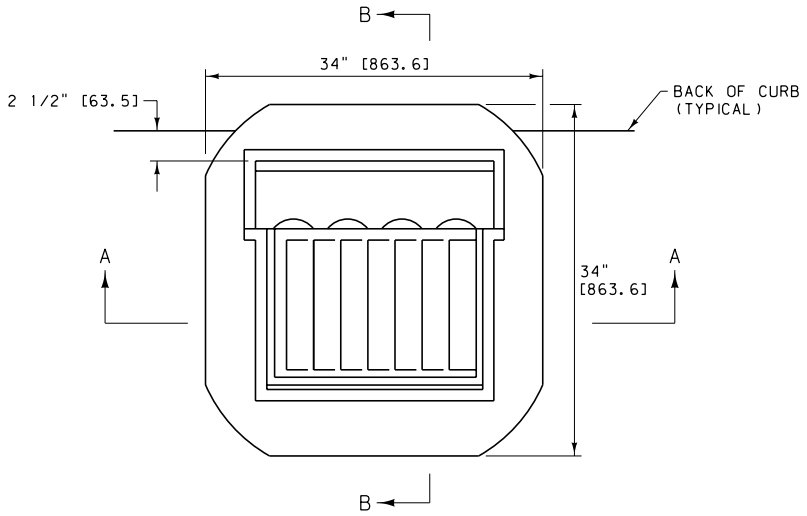

PLAN

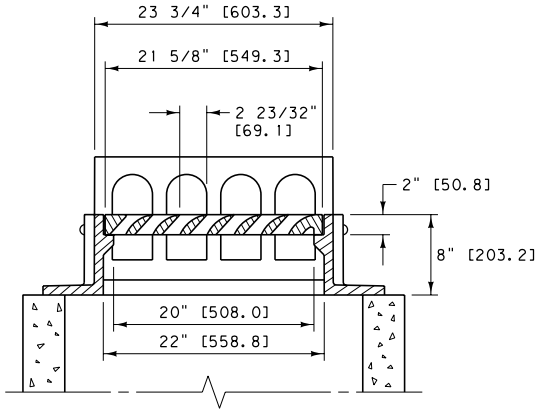

SECTION A-A

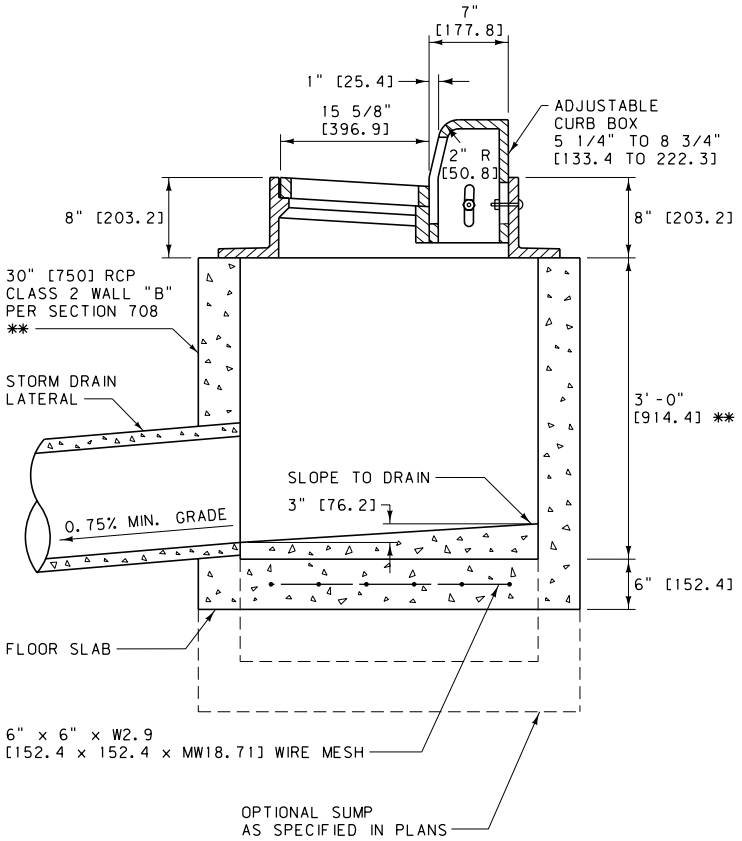

SECTION B-B

** STANDARD UNLESS OTHERWISE NOTED ON THE PLANS.

COMBINATION

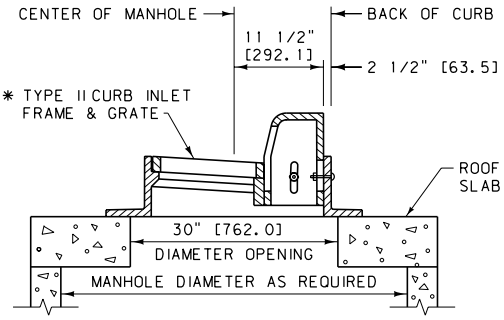

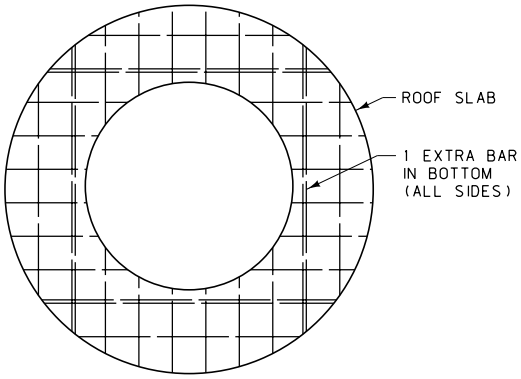

ROOF SLAB

SEE DETAILED DRAWING NO. 604-02 FOR DIAMETER, SLAB THICKNESS AND REINFORCING REQUIREMENTS FOR COMBINATION TYPE 3 MANHOLE. DO NOT USE TYPE II COMBINATION INLETS FOR MANHOLE DEPTHS GREATER THAN 4 FEET [1.2 m].

NOTES: ALL CONCRETE IS CLASS GENERAL OR APPROVED EQUAL.

* SEE QUALIFIED PRODUCTS LIST FOR APPROVED GRATES.

UNITS SHOWN IN BRACKETS [] ARE METRIC AND ARE IN MILLIMETERS (mm) UNLESS OTHER UNITS ARE SHOWN.

DETAILED DRAWING	
REFERENCE STANDARD SPEC. SECTION 604, 708	DWG. NO. 604-03
CURB INLET TYPE II	
EFFECTIVE: SEPTEMBER 2014	
MDT MONTANA DEPARTMENT OF TRANSPORTATION	

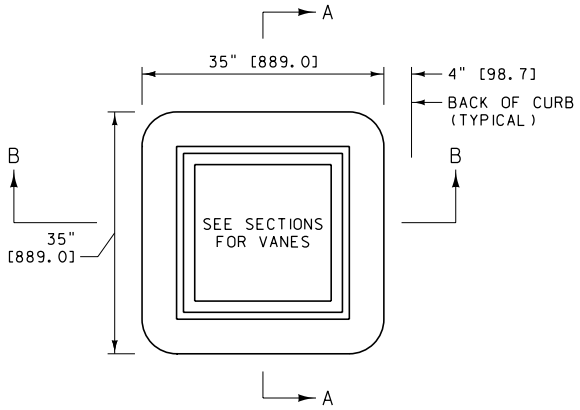

PLAN

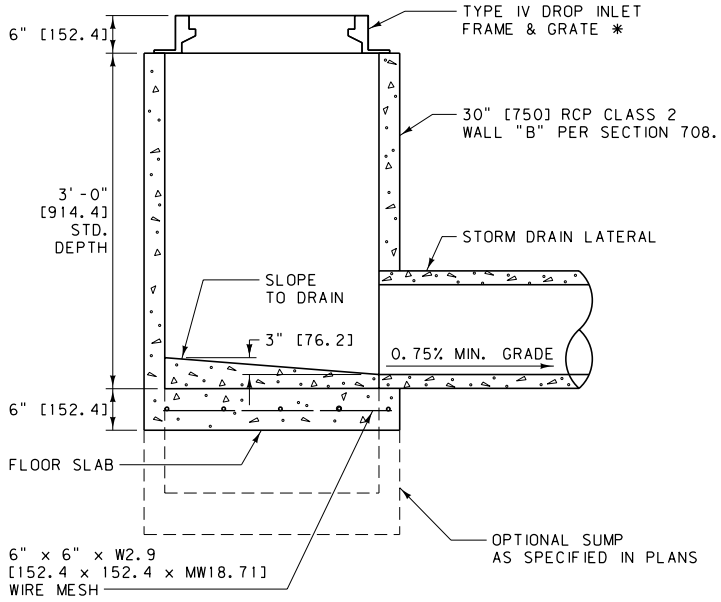

SINGLE DROP INLET
TYPE IV *

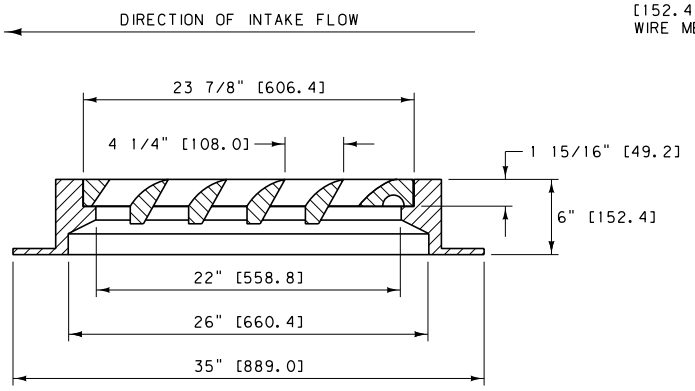

SECTION A-A

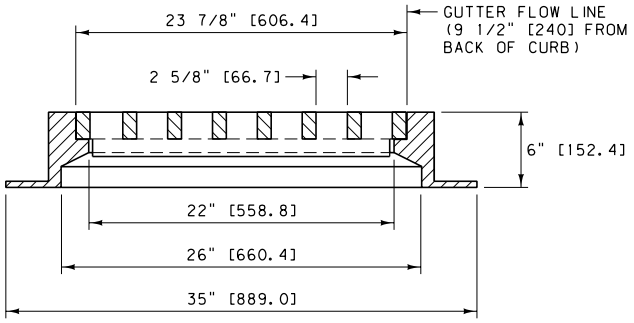

SECTION B-B

COMBINATION

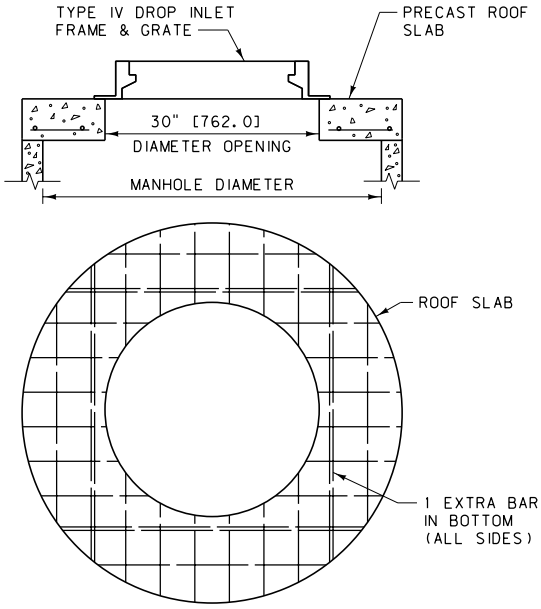

ROOF SLAB

SEE DETAILED DRAWING NO. 604-02 FOR DIAMETER, SLAB THICKNESS AND REINFORCING REQUIREMENTS FOR COMBINATION TYPE 3 MANHOLE, TYPE IV DROP INLET. WHEN COMBINATION MANHOLE DEPTHS ARE GREATER THAN 4 FEET [1.2 m], OFFSET THE ACCESS HOLE OVER THE MANHOLE STEPS.

NOTE:
ALL CONCRETE IS CLASS GENERAL OR APPROVED EQUAL.

* SEE QUALIFIED PRODUCTS LIST FOR APPROVED GRATES.

UNITS SHOWN IN BRACKETS [] ARE METRIC AND ARE IN MILLIMETERS (mm) UNLESS OTHER UNITS ARE SHOWN.

DETAILED DRAWING	
REFERENCE STANDARD SPEC. SECTION 604, 708	DWG. NO. 604-04
DROP INLET TYPE IV	
EFFECTIVE: SEPTEMBER 2014	
MDT MONTANA DEPARTMENT OF TRANSPORTATION	

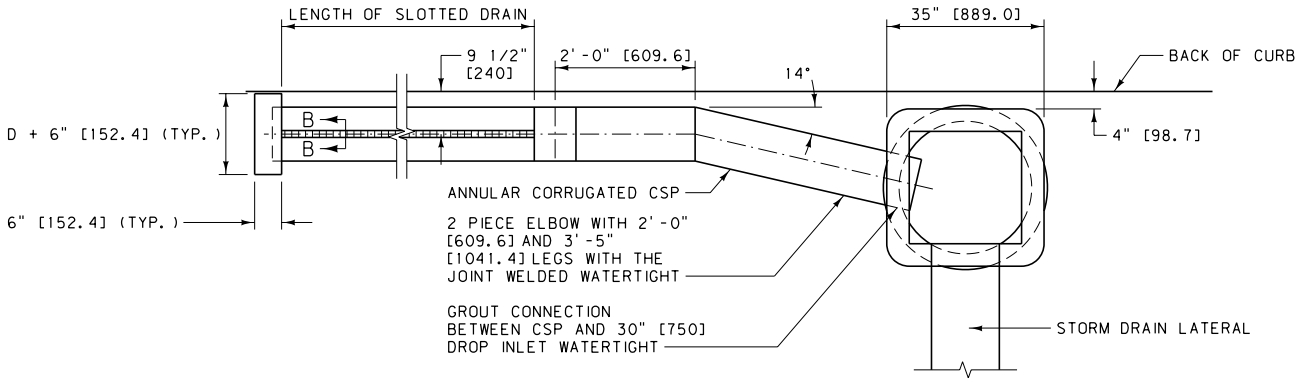

PLAN

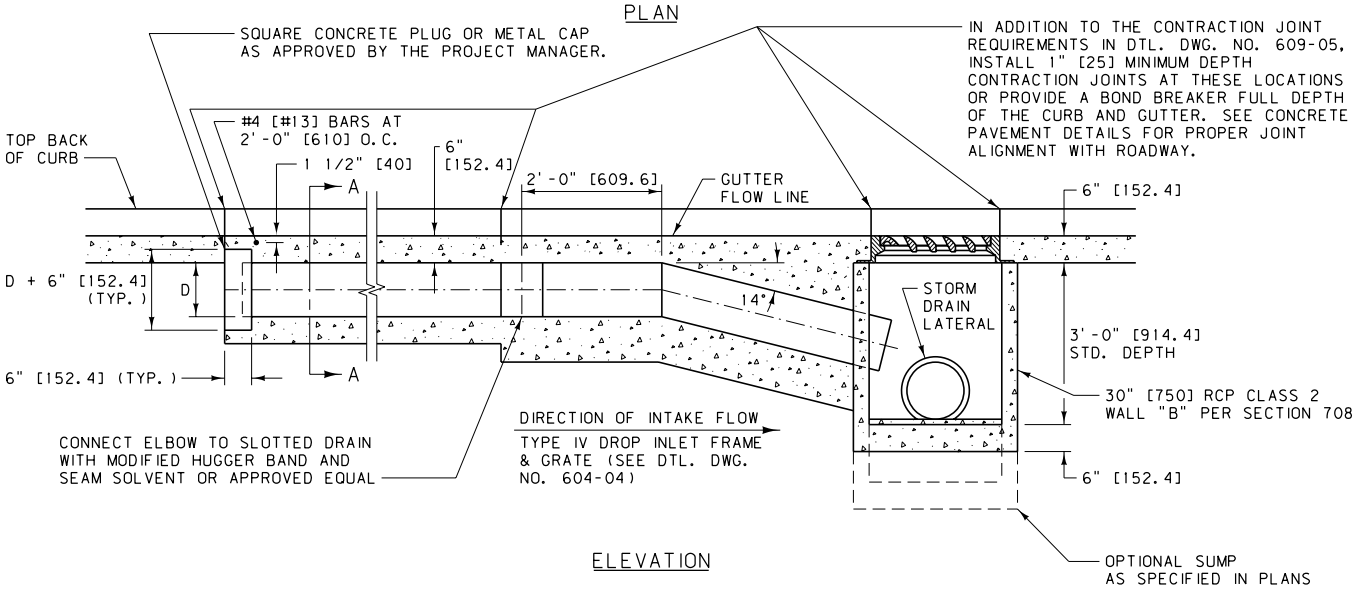

ELEVATION

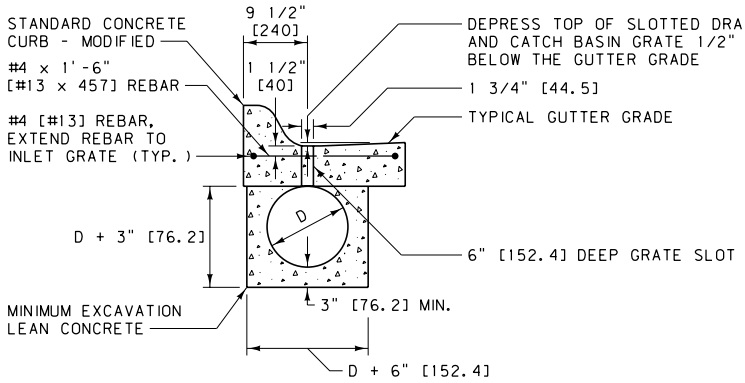

SECTION A-A

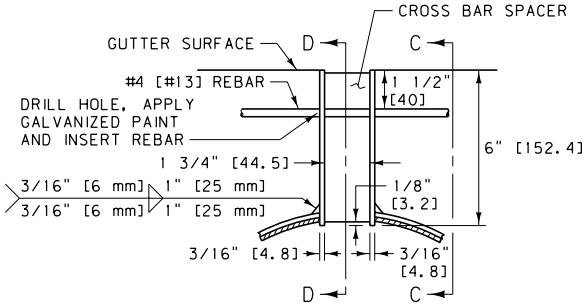

SECTION B-B

GRATE SLOT DETAIL

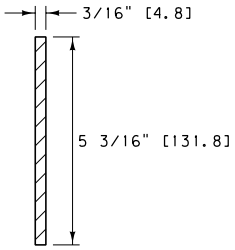

SECTION D-D

CROSS BAR SPACER

NOTES:

1. PAINT ALL WELDS AND OTHER NON-GALVANIZED PARTS, EXCEPT REBAR, WITH ONE COAT OF ZINC RICH PAINT AND TWO COATS OF ALUMINUM PAINT PER SECTION 710.
2. USE A 15 OR 30 POUND [6.8 OR 13.6 KILOGRAM] ROOFING FELT MATERIAL, OR OTHER PRODUCT AS APPROVED BY THE PROJECT MANAGER, FOR A BOND BREAKER.

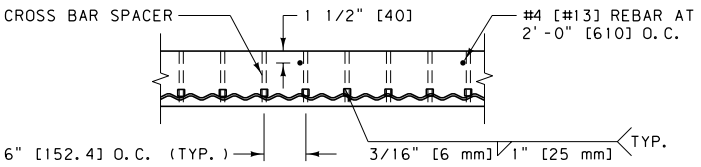

SECTION C-C

GRATE SLOT WELDING DETAIL

UNITS SHOWN IN BRACKETS [] ARE METRIC AND ARE IN MILLIMETERS (mm) UNLESS OTHER UNITS ARE SHOWN.

DETAILED DRAWING	
REFERENCE STANDARD SPEC. SECTION 604, 708, 710	DWG. NO. 604-06
TYPE IV DROP INLET WITH SLOTTED DRAIN	
EFFECTIVE: SEPTEMBER 2014	

MDT MONTANA DEPARTMENT OF TRANSPORTATION

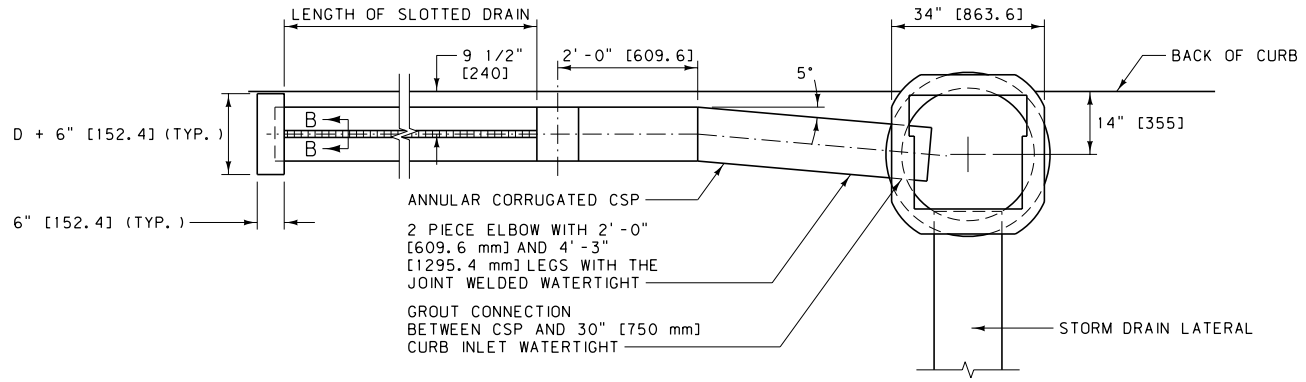

PLAN

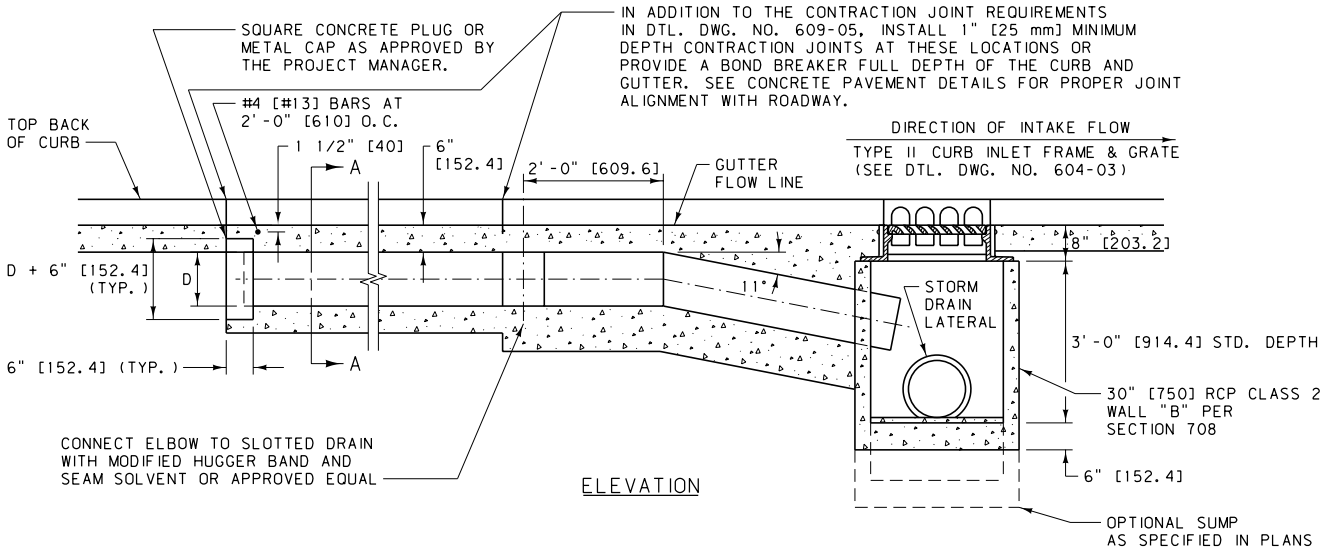

ELEVATION

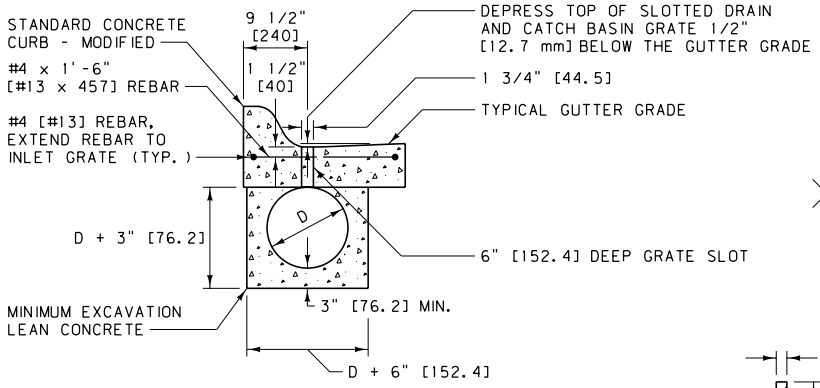

SECTION A-A

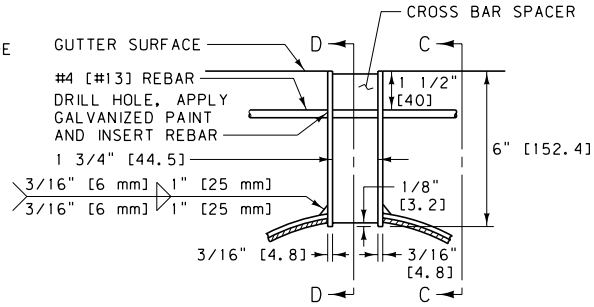

SECTION B-B

GRATE SLOT DETAIL

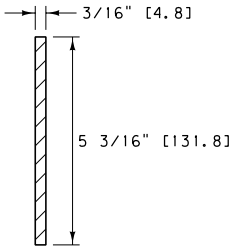

SECTION D-D

CROSS BAR SPACER

NOTES:

PAINT ALL WELDS AND OTHER NON-GALVANIZED PARTS WITH ONE COAT OF ZINC RICH PAINT AND TWO COATS OF ALUMINUM PAINT PER SECTION 710.

USE A 15 OR 30 POUND [6.8 OR 13.6 KILOGRAM] ROOFING FELT MATERIAL, OR OTHER PRODUCT AS APPROVED BY THE PROJECT MANAGER, FOR A BOND BREAKER.

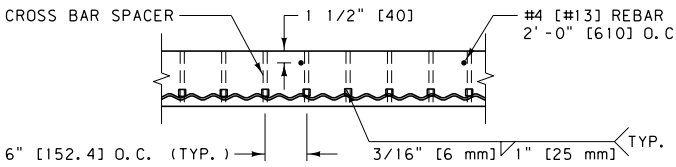

SECTION C-C

GRATE SLOT WELDING DETAIL

UNITS SHOWN IN BRACKETS [] ARE METRIC AND ARE IN MILLIMETERS (mm) UNLESS OTHER UNITS ARE SHOWN.

DETAILED DRAWING	
REFERENCE STANDARD SPEC. SECTION 604, 708, 710	DWG. NO. 604-08
TYPE II CURB INLET WITH SLOTTED DRAIN	
EFFECTIVE: SEPTEMBER 2014	

MDT MONTANA DEPARTMENT OF TRANSPORTATION

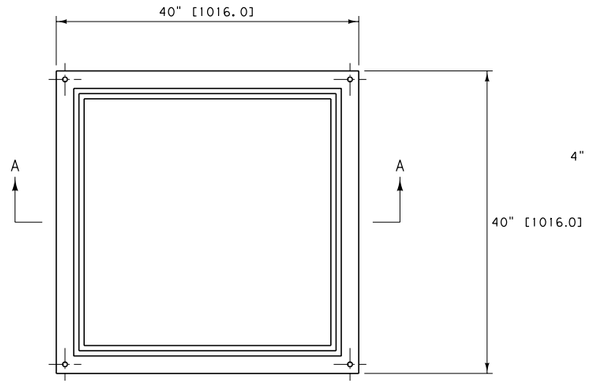

PLAN - FRAME

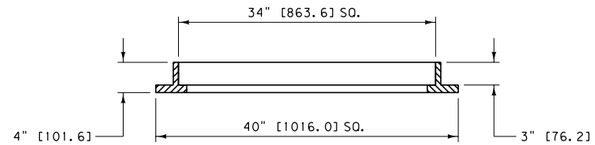

SECTION A-A

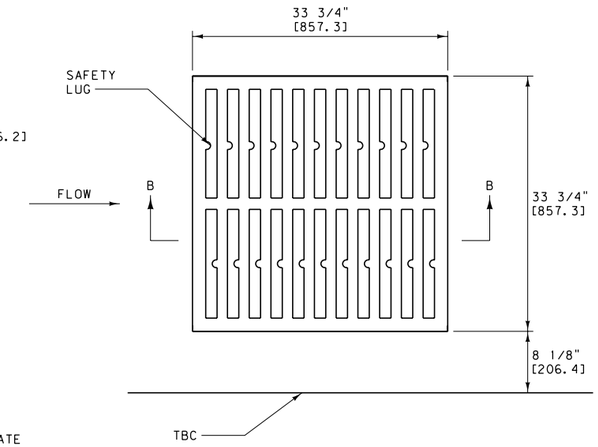

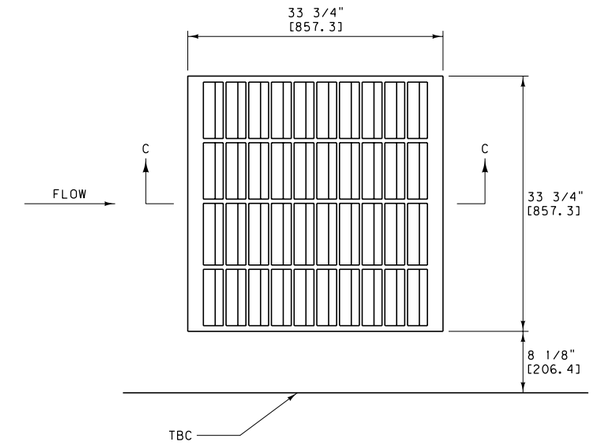

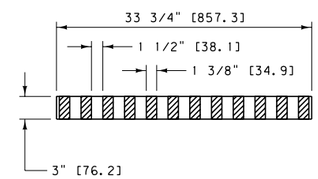

SECTION B-B
STRAIGHT BAR GRATE
TYPE I ✱

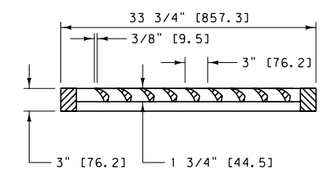

SECTION C-C
VANE STYLE GRATE
TYPE V ✱

CURB TO GRATE

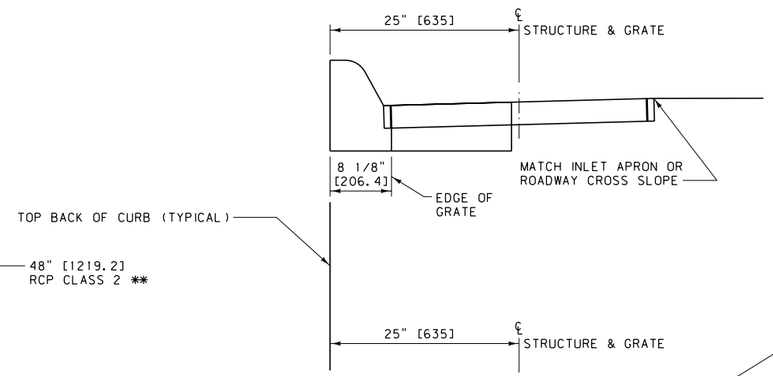

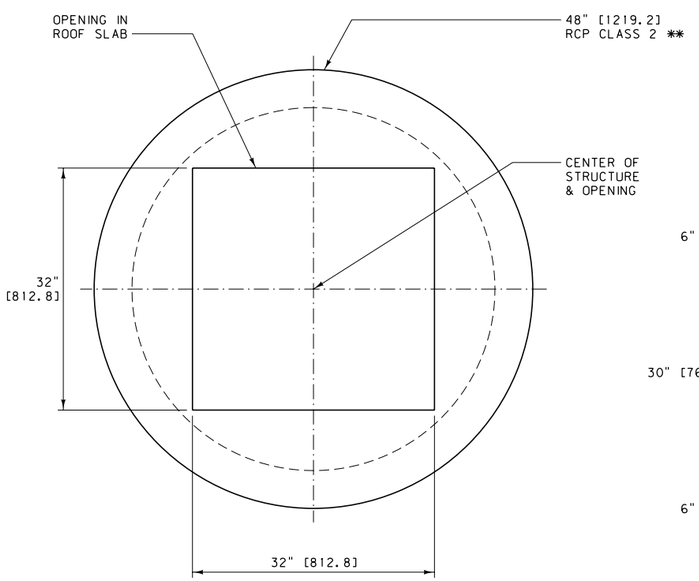

ROOF SLAB

TYPE I AND V DROP INLET

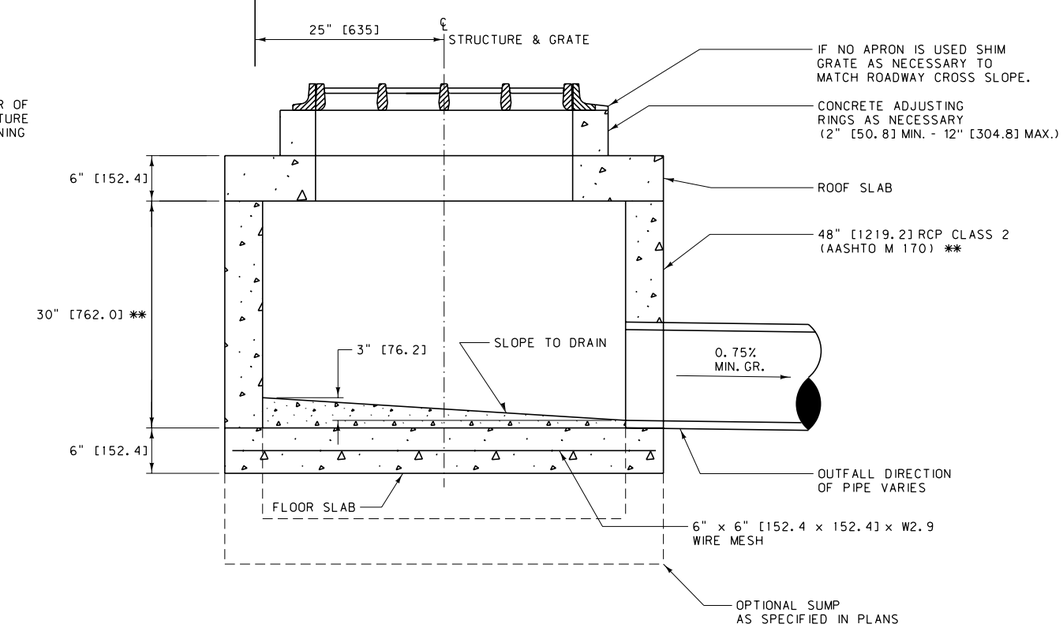

SECTION VIEW

NOTES: ALL CONCRETE IS CLASS GENERAL OR APPROVED EQUAL.

SEE PLANS FOR LOCATIONS AND QUANTITIES.

SET ALL FINAL INLET GRATE ELEVATIONS TO ENSURE THAT POSITIVE DRAINAGE IS PROVIDED FROM THE FLOWLINE OF THE CURB AND GUTTER SECTION INTO THE INLET.

✱✱ STANDARD UNLESS OTHERWISE NOTED ON PLANS.

PLAN STATION AND OFFSET IS TO THE CENTER OF THE STRUCTURE.

TYPE I AND TYPE V GRATES ARE INTERCHANGEABLE WITH THE SAME FRAME AND HAVE THE ABILITY TO BE ROTATED 90 DEGREES IN ANY DIRECTION. INSTALL GRATE TO MATCH FLOW DIRECTION SHOWN.

PROVIDE SAFETY LUG ON STRAIGHT BAR GRATE BETWEEN EACH BAR.

✱ SEE QUALIFIED PRODUCTS LIST FOR APPROVED GRATES

UNITS SHOWN IN BRACKETS [] ARE METRIC AND ARE IN MILLIMETERS (mm) UNLESS OTHER UNITS ARE SHOWN.

DETAILED DRAWING	
REFERENCE STANDARD SPEC. SECTION 604	DWG. NO. 604-14
DROP INLETS TYPE I AND V	
EFFECTIVE: SEPTEMBER 2014	
MDT MONTANA DEPARTMENT OF TRANSPORTATION	

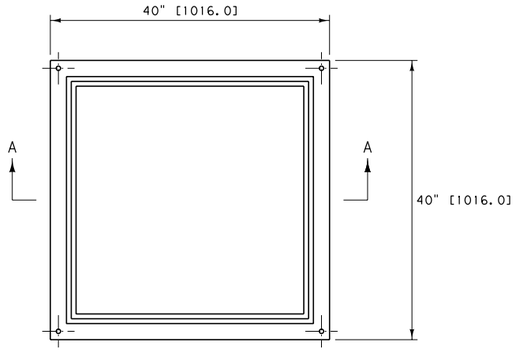

PLAN - FRAME

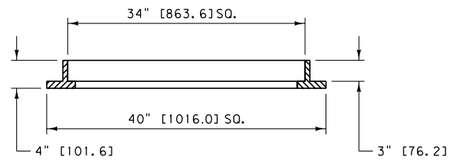

SECTION A-A

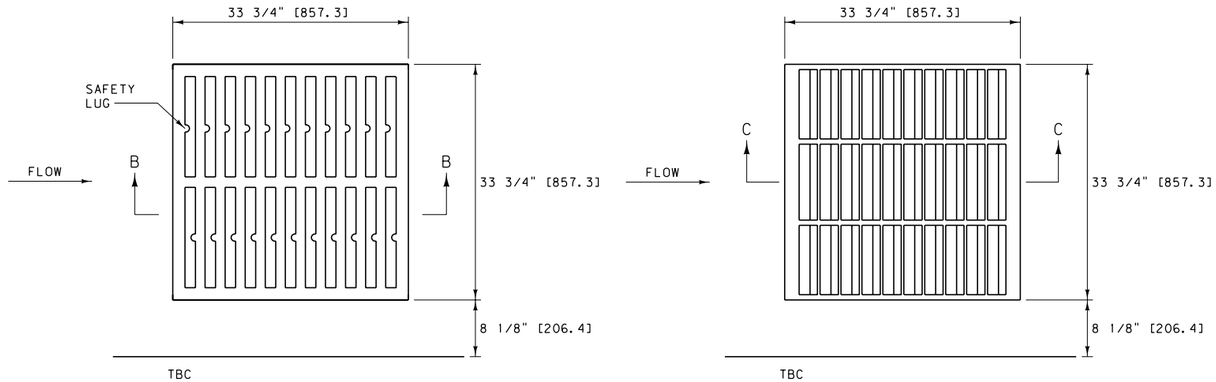

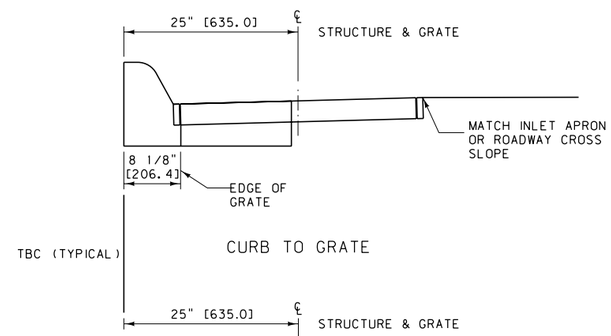

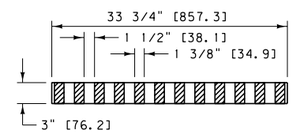

SECTION B-B

STRAIGHT BAR GRATE

TYPE III ✱

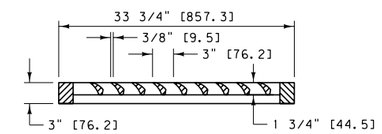

SECTION C-C

VANE STYLE GRATE

TYPE VI ✱

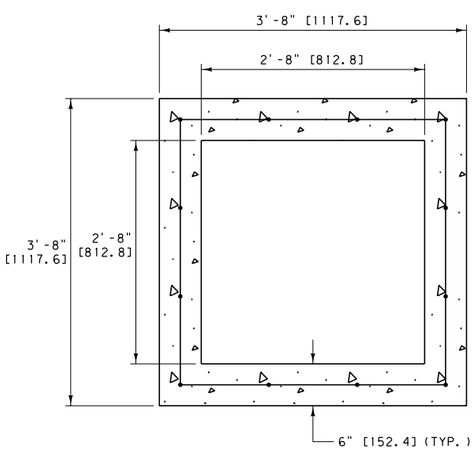

TOP VIEW

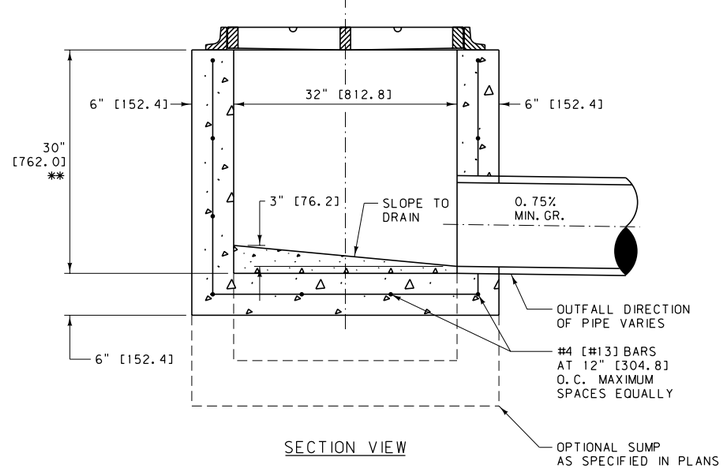

SECTION VIEW

TYPE III AND VI DROP INLET

NOTES: ALL CONCRETE IS CLASS GENERAL OR APPROVED EQUAL.

SEE PLANS FOR LOCATIONS AND QUANTITIES.

SET ALL FINAL INLET GRATE ELEVATIONS TO ENSURE THAT POSITIVE DRAINAGE IS PROVIDED FROM THE FLOWLINE OF THE CURB AND GUTTER SECTION INTO THE INLET.

✱✱ STANDARD UNLESS OTHERWISE NOTED ON PLANS.

PLAN STATION AND OFFSET IS TO THE CENTER OF THE STRUCTURE.

TYPE III AND TYPE VI GRATES ARE INTERCHANGEABLE WITH THE SAME FRAME AND HAVE THE ABILITY TO BE ROTATED 90 DEGREES IN ANY DIRECTION. INSTALL GRATE TO MATCH FLOW DIRECTION SHOWN.

PROVIDE SAFETY LUG ON STRAIGHT BAR GRATE BETWEEN EACH BAR.

✱ SEE QUALIFIED PRODUCTS LIST FOR APPROVED GRATES.

UNITS SHOWN IN BRACKETS [] ARE METRIC AND ARE IN MILLIMETERS (mm) UNLESS OTHER UNITS ARE SHOWN.

DETAILED DRAWING	
REFERENCE STANDARD SPEC. SECTION 604	DWG. NO. 604-16
DROP INLETS TYPE III AND VI	
EFFECTIVE: SEPTEMBER 2014	

MDT MONTANA DEPARTMENT OF TRANSPORTATION

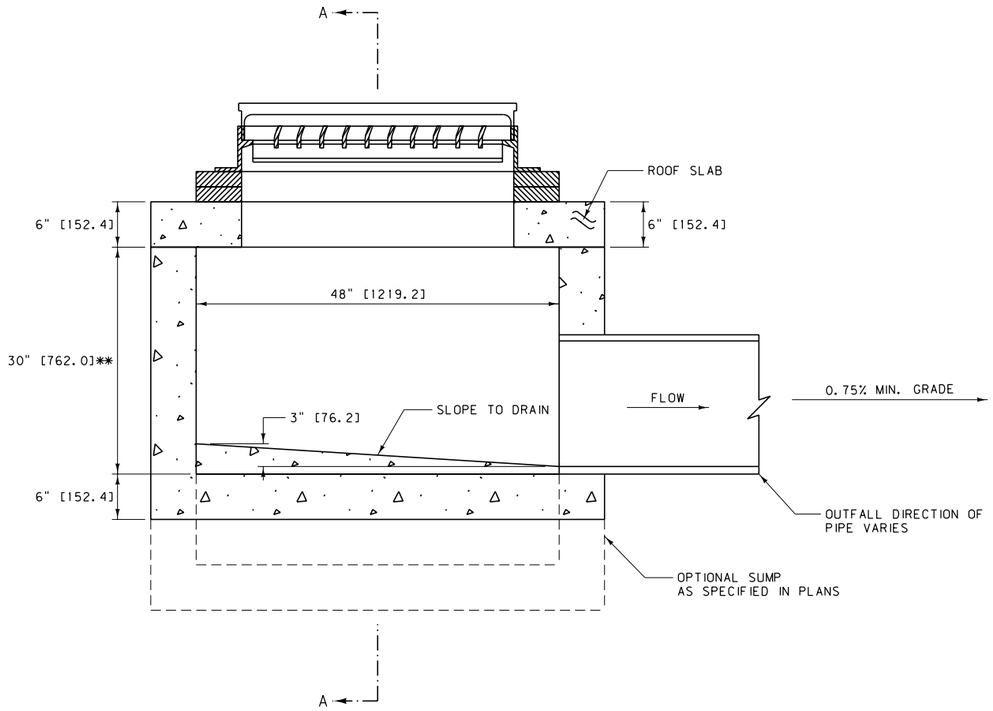

TYPE B CURB INLET

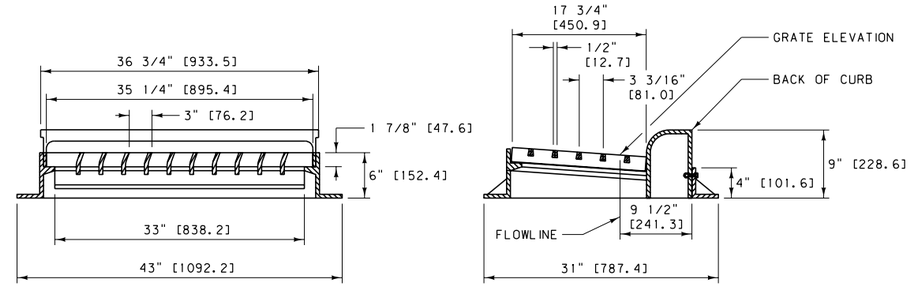

TYPE B
CURVED VANE STYLE *

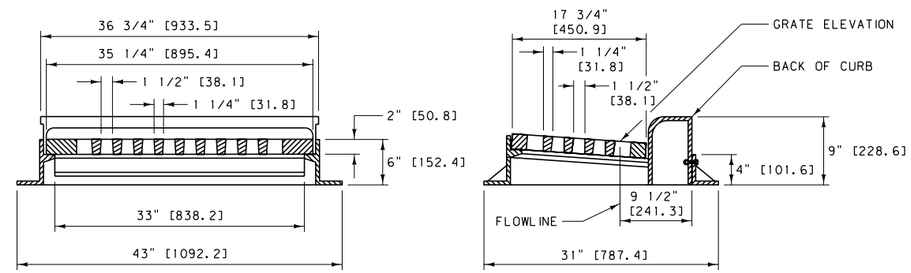

TYPE A
STRAIGHT BAR STYLE *

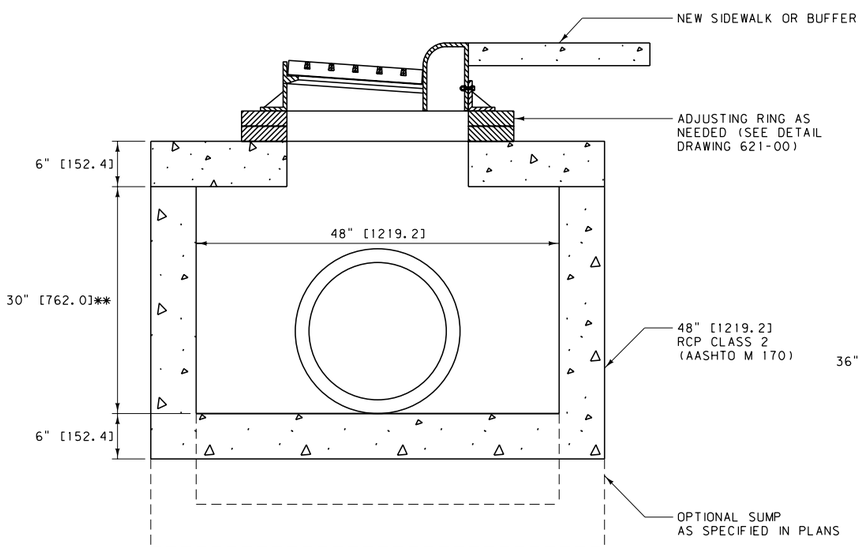

SECTION A-A

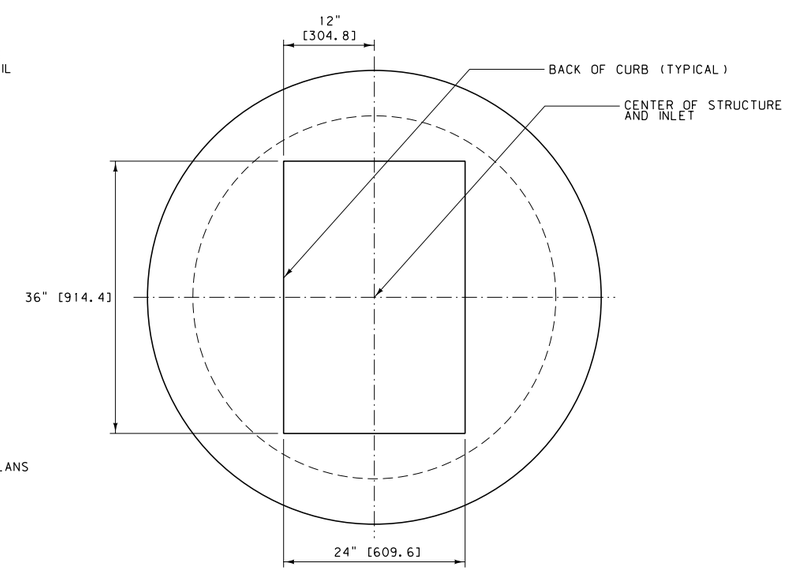

ROOF SLAB

NOTE: SEE DETAIL DRAWING NO. 604-02 FOR REINFORCING REQUIREMENTS

NOTES:

SEE PLANS FOR LOCATIONS AND QUANTITIES.

PLAN STATION AND OFFSET IS CENTER OF STRUCTURE.

**STANDARD UNLESS OTHERWISE NOTED ON PLANS.

SET ALL FINAL INLET GRATE ELEVATIONS TO ENSURE THAT POSITIVE DRAINAGE IS PROVIDED.

WHEN USED AS A COMBINATION M.H. AND THE DEPTH IS GREATER THAN 4' [1200], OFFSET THE ACCESS HOLE/GRATE OVER THE M.H. STEPS.

*SEE QUALIFIED PRODUCTS LIST FOR APPROVED GRATES.

UNITS SHOWN IN BRACKETS [] ARE METRIC AND ARE IN MILLIMETERS (mm) UNLESS OTHER UNITS ARE SHOWN.

DETAILED DRAWING	
REFERENCE STANDARD SPEC. SECTION 604	DWG. NO. 604-18
TYPE A AND B CURB INLETS	
EFFECTIVE: SEPTEMBER 2014	
MDT MONTANA DEPARTMENT OF TRANSPORTATION	

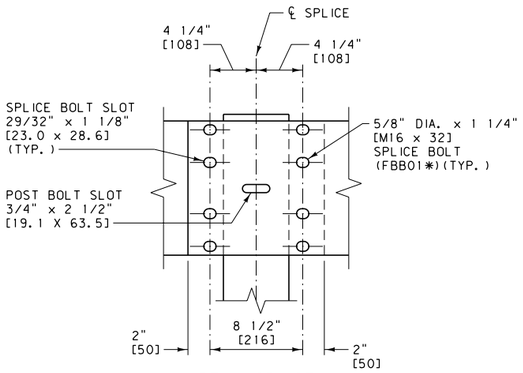

BEAM SPLICE

(LAP IN DIRECTION OF ADJACENT TRAFFIC)

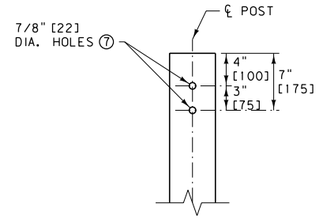

POST HOLE DETAIL

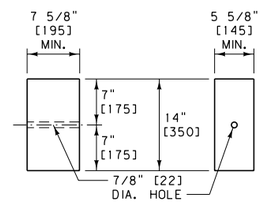

WOOD BLOCK

PDB01*

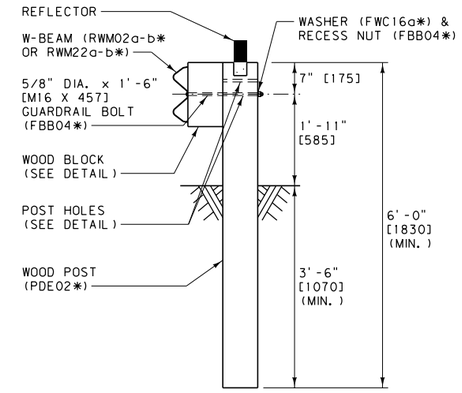

WOOD POST AND MOUNTING DETAIL

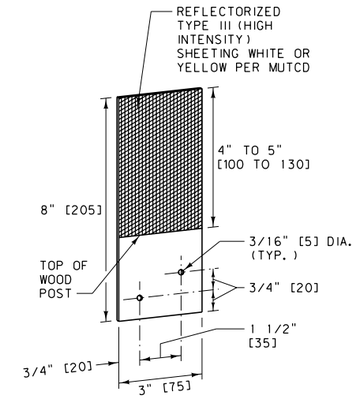

REFLECTOR

(SEE NOTES)

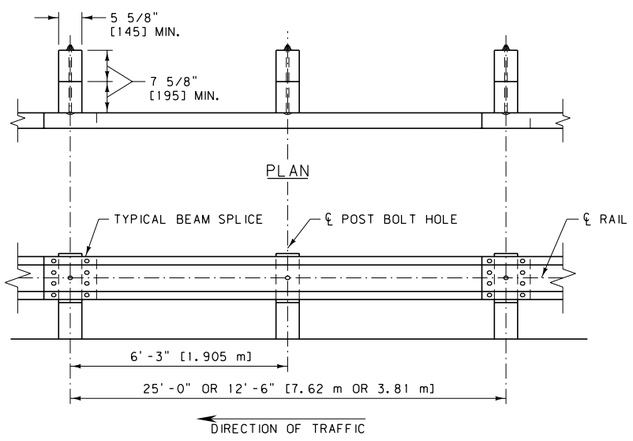

ELEVATION

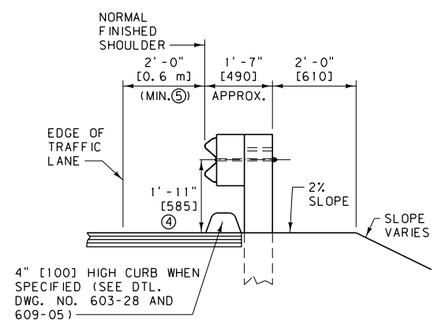

TYPICAL INSTALLATION

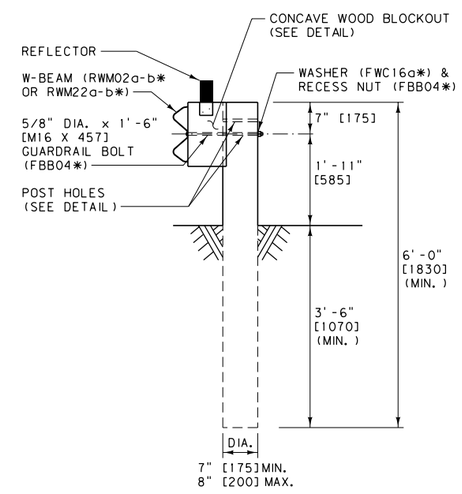

OPTIONAL ROUND WOOD POST
MOUNTING DETAIL

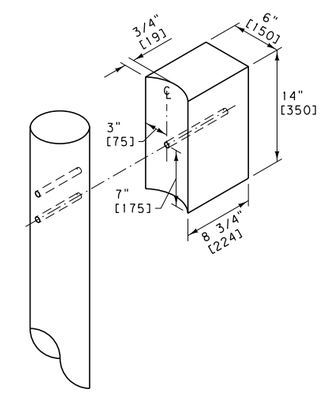

CONCAVE WOOD BLOCKOUT
FOR USE WITH ROUND POST

NOTES:

① INSTALL ALL BOLTS WITH HEADS ON TRAFFIC SIDE OF INSTALLATION.

② USE WOOD BLOCKS OR OTHER NCHRP 350 APPROVED BLOCKS. AFFIX BLOCKS TO POSTS WITH TWO 16 PENNY GALV. NAILS OR 14 GAUGE WIRE WRAP.

③ ATTACH REFLECTORS TO POSTS EVERY 25 FEET [7.62 m], INCLUDING TERMINAL SECTIONS, WITH THE REFLECTORIZED SURFACE FACING ADJACENT TRAFFIC. FABRICATE REFLECTORS FROM 0.063" [1.6] THICK ALUMINUM ALLOY PER SECTION 704 OR PLASTIC REFLECTORS WITH A URETHANE HINGE. FASTEN REFLECTOR TO WOOD POST USING TWO 16 PENNY RING-SHANKED GALVANIZED NAILS AND TWO 3/16" [4.8] DIA. WASHERS IN PRE-DRILLED HOLES.

④ ON EXISTING GUARDRAIL INSTALLATIONS, THE MINIMUM RAIL HEIGHT IS 1'-8" [510].

⑤ WIDENING IS REQUIRED IF FINISHED SHOULDER IS LESS THAN 2'-0" [0.6 m] FROM THE TRAFFIC LANE.

⑥ DO NOT INSTALL W-BEAM GUARDRAIL FOR OBSTACLES WITHIN 5.6' [1.7 m] OF THE FACE OF THE RAIL.

⑦ USE LOWER HOLE ON NEW CONSTRUCTION INSTALLATIONS.

⑧ USE 6' [1830] POSTS FOR STANDARD INSTALLATIONS.

* SEE DTL. DWG. NO. 606-80 FOR SCHEDULE OF GUARDRAIL HARDWARE.

UNITS SHOWN IN BRACKETS [] ARE METRIC AND ARE IN MILLIMETERS (mm) UNLESS OTHER UNITS ARE SHOWN.

DETAILED DRAWING	
REFERENCE STANDARD SPEC. SECTION 606, 704	DWG. NO. 606-05A
METAL GUARDRAIL - STANDARD (WOOD POSTS)	
EFFECTIVE: SEPTEMBER 2014	
MDT MONTANA DEPARTMENT OF TRANSPORTATION	

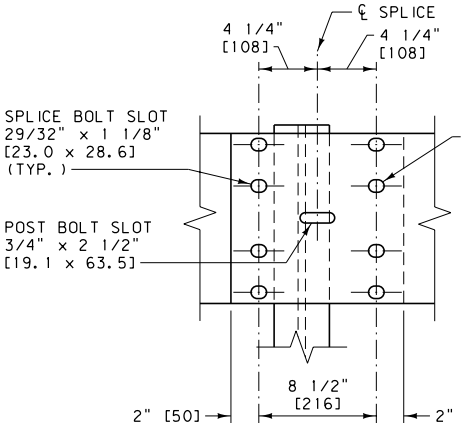

BEAM SPLICE

(LAP IN DIRECTION OF ADJACENT TRAFFIC)

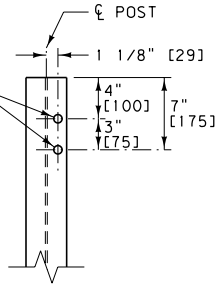

POST HOLE DETAIL

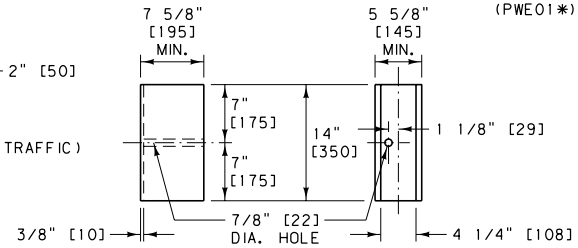

ROUTED WOOD BLOCK

PDB01*

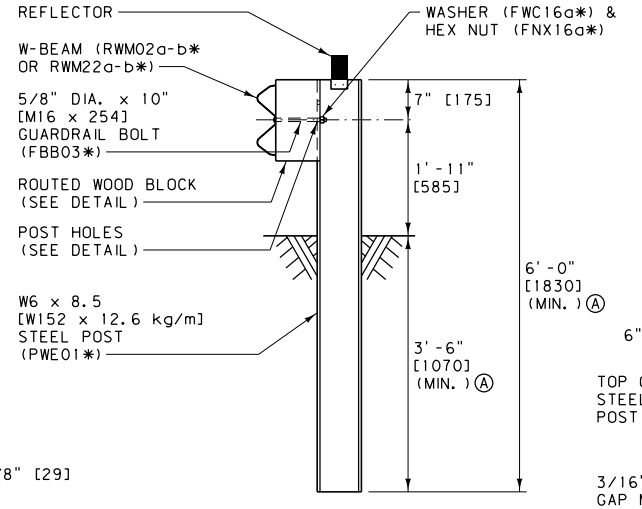

STEEL POST AND MOUNTING DETAIL

Ⓐ STANDARD UNLESS SPECIFIED OTHERWISE IN PLANS.

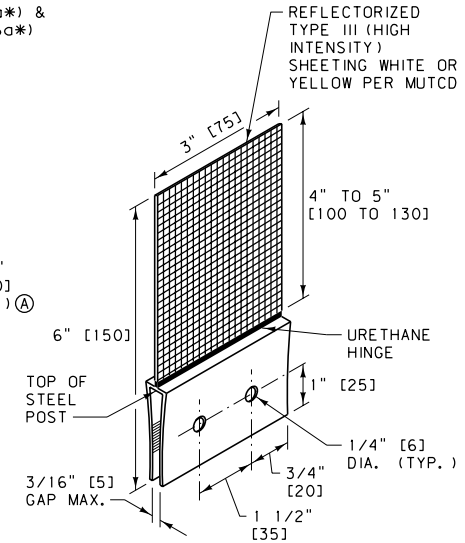

REFLECTOR

(SEE NOTE 3)

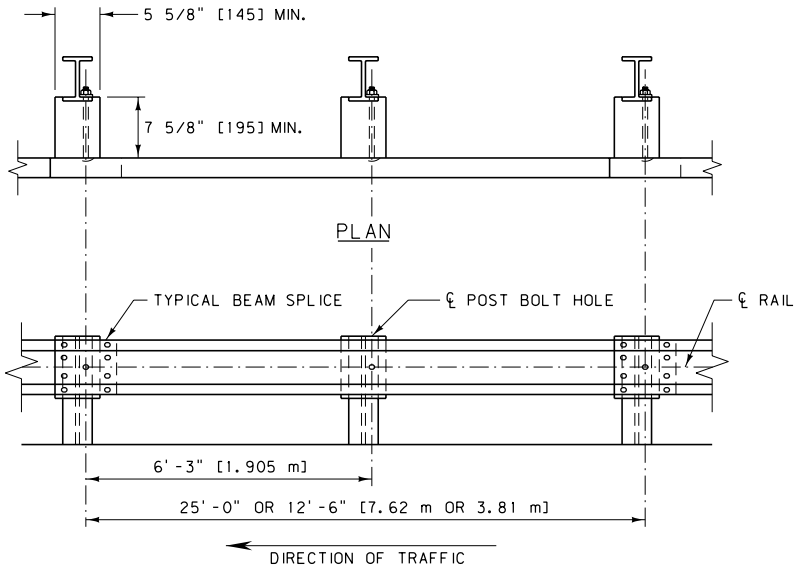

ELEVATION

NOTES:

① INSTALL ALL BOLTS WITH HEADS ON TRAFFIC SIDE OF INSTALLATION.

② USE ROUTED WOOD BLOCKS OR OTHER NCHRP 350 APPROVED BLOCKS.

③ ATTACH REFLECTORS TO POSTS EVERY 25 FEET [7.62 m], INCLUDING TERMINAL SECTIONS, WITH THE REFLECTORIZED SURFACE FACING ADJACENT TRAFFIC. FASTEN REFLECTOR TO STEEL POST USING AN APPROVED ADHESIVE. REFLECTORS MAY BE BOLTED TO POSTS PROVIDED HOLES IN POSTS ARE DRILLED BEFORE BEING GALVANIZED.

④ ON EXISTING GUARDRAIL INSTALLATIONS, THE MINIMUM RAIL HEIGHT IS 1'-8" [510].

⑤ WIDENING IS REQUIRED IF FINISHED SHOULDER IS LESS THAN 2'-0" [0.6 m]FROM THE TRAFFIC LANE.

⑥ STEEL POSTS WITH OTHER POST HOLE CONFIGURATIONS MAY BE ACCEPTED, PROVIDED THEY HAVE AT LEAST THE HOLES DETAILED ON THIS DRAWING AND THEY MEET AASHTO'S PUBLICATION, "A GUIDE TO STANDARDIZED HIGHWAY BARRIER HARDWARE" AND NCHRP 350 REQUIRMENTS.

⑦ DO NOT INSTALL W-BEAM GUARDRAIL FOR OBSTACLES WITHIN 5.6' [1.7 m]OF THE FACE OF THE RAIL.

⑧ USE LOWER HOLE ON NEW CONSTRUCTION INSTALLATIONS.

⑨ USE 6' [1830] POSTS FOR STANDARD INSTALLATIONS.

* SEE DTL. DWG. NO. 606-80 FOR SCHEDULE OF GUARDRAIL HARDWARE.

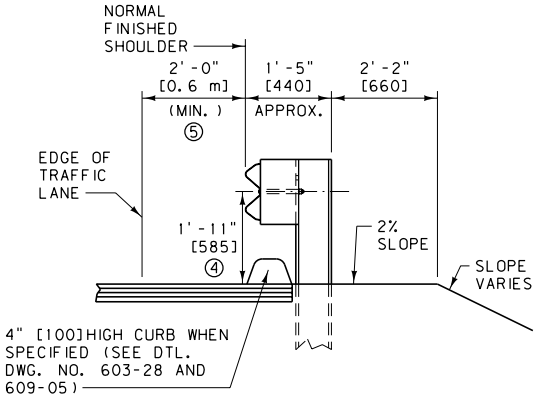

TYPICAL INSTALLATION

UNITS SHOWN IN BRACKETS [] ARE METRIC AND ARE IN MILLIMETERS (mm) UNLESS OTHER UNITS ARE SHOWN.

DETAILED DRAWING	
REFERENCE STANDARD SPEC. SECTION 606	DWG. NO. 606-05B
METAL GUARDRAIL - STANDARD (STEEL POSTS)	
EFFECTIVE: SEPTEMBER 2014	
MDT MONTANA DEPARTMENT OF TRANSPORTATION	

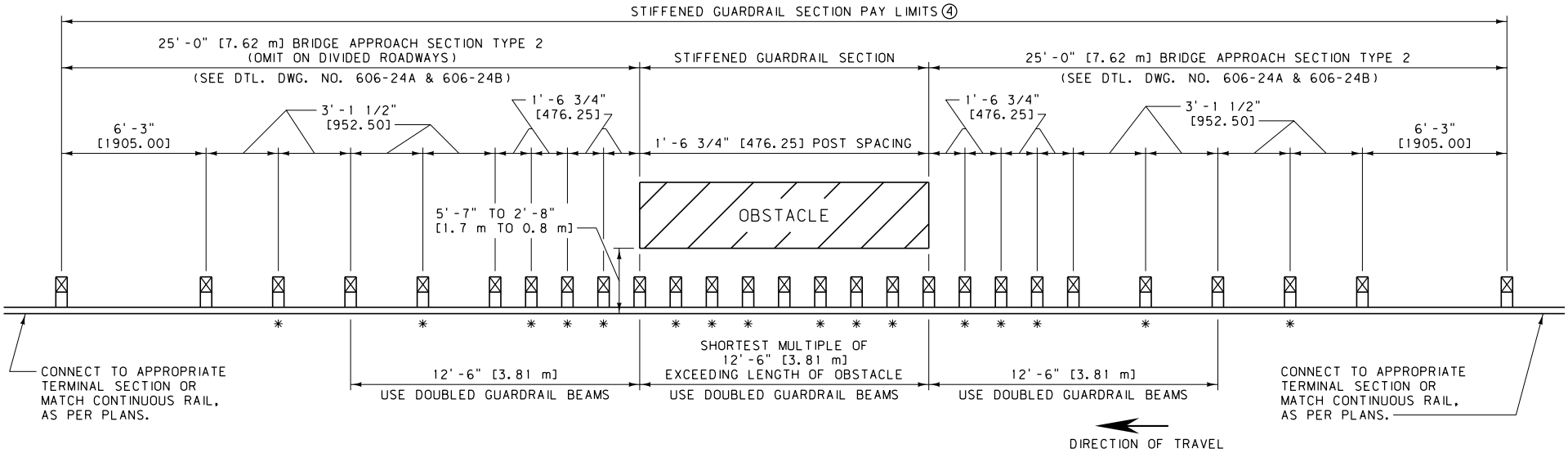

LINE OBSTACLE APPLICATION

* GUARDRAIL NOT ATTACHED TO ADDED POSTS. BLOCK-OUT FASTENED TO POST WITH STANDARD POST BOLT.

GUARDRAIL ATTACHED TO POSTS ONLY AT STANDARD MULTIPLES OF 6'-3" [1.905 m] THROUGH OBSTACLE SECTION.

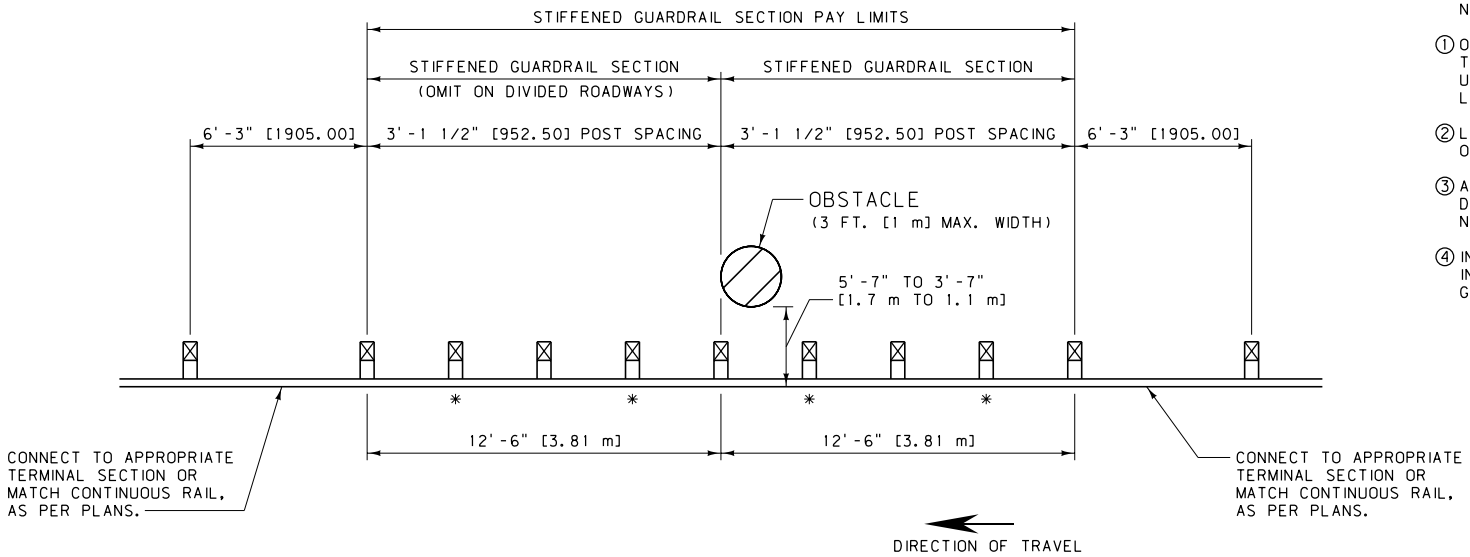

POINT OBSTACLE APPLICATION

NOTES:

① OBSTACLES CLOSER TO THE FACE OF RAIL THAN THE INDICATED LIMITS REQUIRE THE USE OF A RIGID BARRIER SYSTEM WITH LITTLE TO NO DYNAMIC DEFLECTION.

② LAP ALL DOUBLED RAIL IN THE DIRECTION OF ADJACENT TRAFFIC.

③ ALL POSTS AND BLOCKS ARE STANDARD DIMENSIONS AS PER DETAILED DRAWING NO. 606-05A AND 606-05B.

④ INCLUDE BRIDGE APPROACH SECTION(S) IN PAYMENT LENGTH OF STIFFENED GUARDRAIL.

UNITS SHOWN IN BRACKETS [] ARE METRIC AND ARE IN MILLIMETERS (mm) UNLESS OTHER UNITS ARE SHOWN.

DETAILED DRAWING	
REFERENCE STANDARD SPEC. SECTION 606	DWG. NO. 606-07
STIFFENED GUARDRAIL SECTIONS	
EFFECTIVE: SEPTEMBER 2014	

MDT MONTANA DEPARTMENT OF TRANSPORTATION

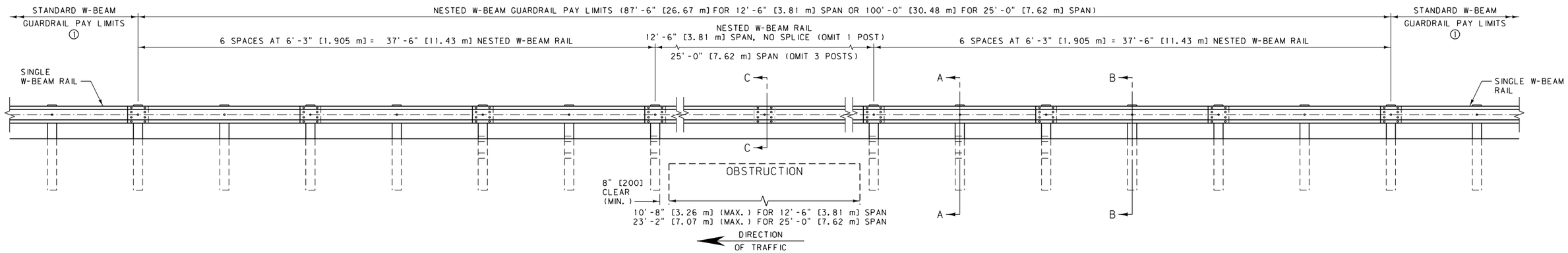

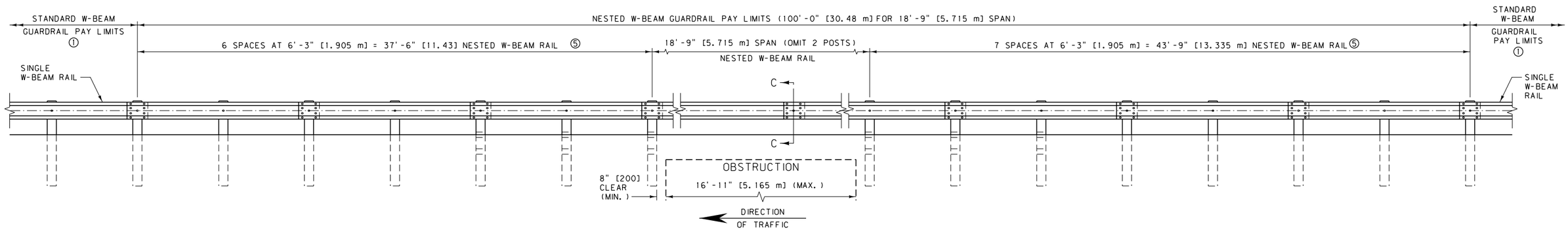

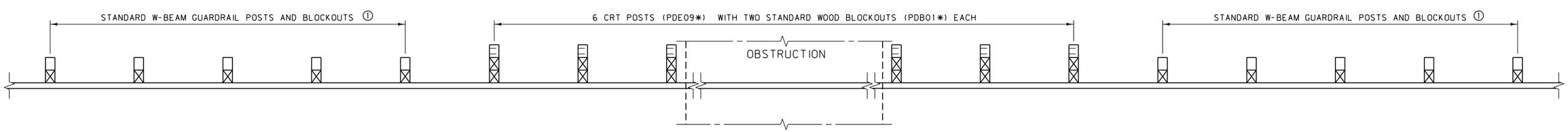

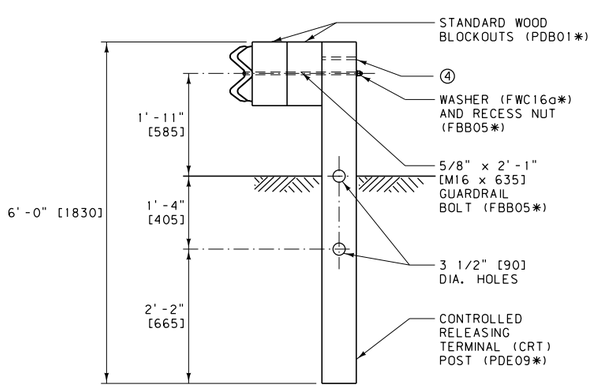

SECTION A-A

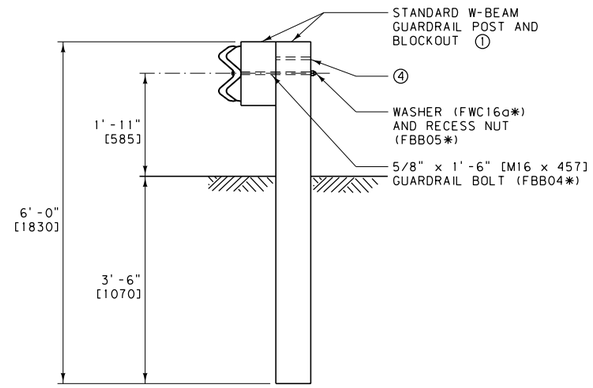

SECTION B-B

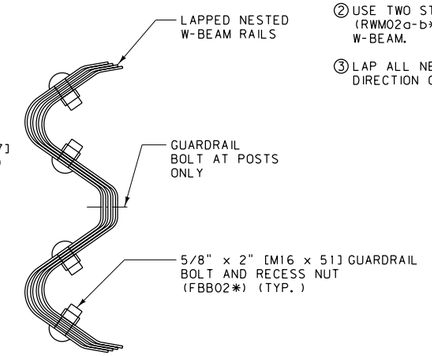

SECTION C-C

NOTES:

① SEE DTL. DWG. NO. 606-05A AND 606-05B FOR STANDARD W-BEAM GUARDRAIL AND ASSOCIATED HARDWARE.

② USE TWO STANDARD W-BEAM RAILS (RWM02a-b* OR RWM22a-b*) FOR NESTED W-BEAM.

③ LAP ALL NESTED W-BEAM RAIL IN THE DIRECTION OF ADJACENT TRAFFIC.

④ ALL POSTS ARE TO HAVE A SECOND BOLT HOLE AT 3" [75] ABOVE THE FIRST.

⑤ THE SPLICE LOCATIONS ON THE 18'-9" [5.715 m] SPAN MAY BE SHIFTED DOWNSTREAM BY 6'-3" [1.905 m].

⑥ DO NOT INSTALL NESTED W-BEAM GUARDRAIL FOR OBSTACLES WITHIN 7.3' [2.2 m] OF THE FACE OF THE RAIL.

* SEE DTL. DWG. NO. 606-80 FOR SCHEDULE OF GUARDRAIL HARDWARE.

UNITS SHOWN IN BRACKETS [] ARE METRIC AND ARE IN MILLIMETERS (mm) UNLESS OTHER UNITS ARE SHOWN.

DETAILED DRAWING	
REFERENCE STANDARD SPEC. SECTION 606	DWG. NO. 606-09
NESTED W-BEAM GUARDRAIL	
EFFECTIVE: SEPTEMBER 2014	

MDT MONTANA DEPARTMENT OF TRANSPORTATION

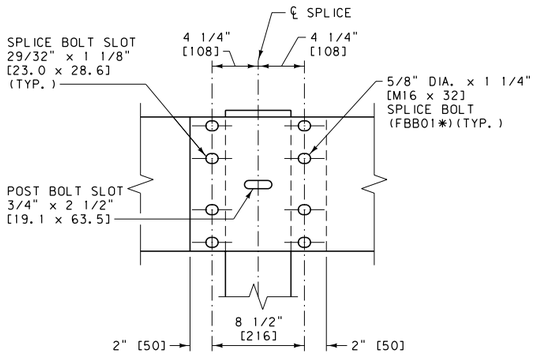

BEAM SPLICE

(LAP IN DIRECTION OF ADJACENT TRAFFIC)

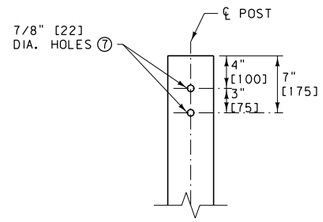

POST HOLE DETAIL

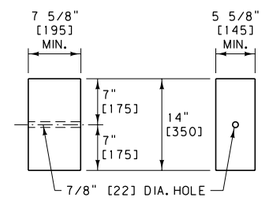

WOOD BLOCK

PDB01*

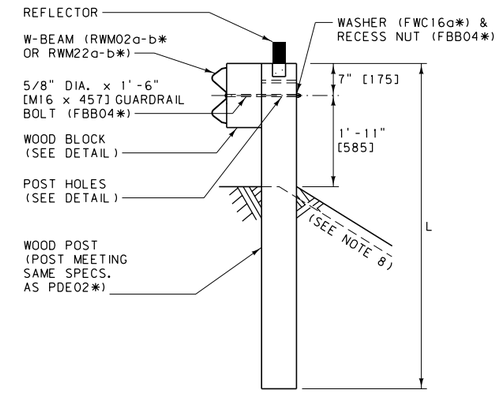

WOOD POST AND MOUNTING DETAIL

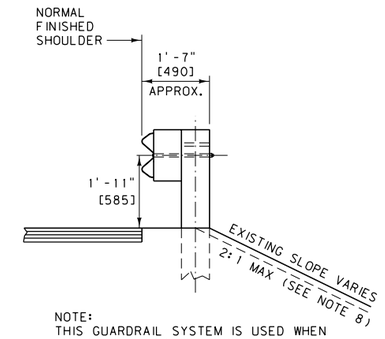

NOTE:
THIS GUARDRAIL SYSTEM IS USED WHEN THE 2'-0" [610] WIDENING BEHIND THE POSTS CANNOT BE PROVIDED. AS PER DTL. DWG. NO. 606-05A & 606-05B.

PROFILE

WOOD POST LENGTH AND SPACING	
POST LENGTH (L)	POST SPACING (S)
7'-0" [2.1 m]	3'-1 1/2" [952.5]
7'-6" [2.3 m]	6'-3" [1905]

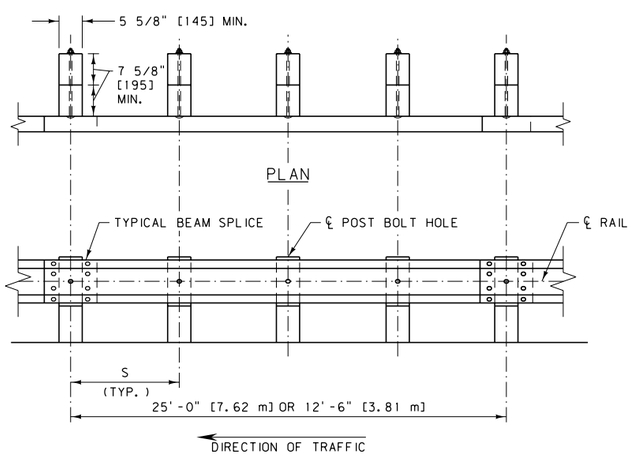

ELEVATION

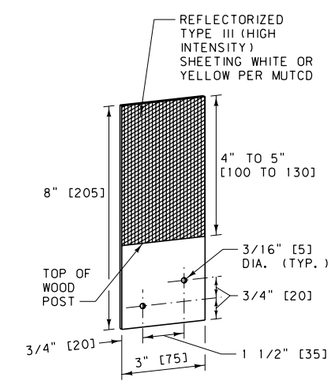

REFLECTOR

(SEE NOTE 3)

NOTES:

① INSTALL ALL BOLTS WITH HEADS ON TRAFFIC SIDE OF INSTALLATION.

② USE WOOD BLOCKS OR OTHER NCHRP 350 APPROVED BLOCKS. AFFIX BLOCKS TO POSTS WITH TWO 16 PENNY GALV. NAILS OR 14 GAUGE WIRE WRAP.

③ ATTACH REFLECTORS TO POSTS EVERY 25' [7.62 m], INCLUDING TERMINAL SECTIONS, WITH THE REFLECTORIZED SURFACE FACING ADJACENT TRAFFIC. FABRICATE REFLECTORS FROM 0.063" [1.6] THICK ALUMINUM ALLOY PER SECTION 704 OR PLASTIC REFLECTORS WITH A URETHANE HINGE. FASTEN REFLECTOR TO WOOD POST USING TWO 16 PENNY RING-SHANKED GALVANIZED NAILS AND TWO 3/16" [4.8] DIA. WASHERS IN PRE-DRILLED HOLES.

④ ON EXISTING GUARDRAIL INSTALLATIONS, THE MINIMUM RAIL HEIGHT IS 1'-8" [510].

⑤ THE W-BEAM RAIL ON THIS SYSTEM REQUIRES ADDITIONAL HOLES TO ACCOMMODATE BEING BOLTED TO POSTS AT HALF THE NORMAL POST SPACING. DRILL ADDITIONAL HOLES IN THE W-BEAM RAIL PRIOR TO APPLYING CORROSION PROTECTION.

⑥ DO NOT INSTALL W-BEAM GUARDRAIL WITH ANY POST LENGTH FOR OBSTACLES WITHIN 4.6' [1.4 m] OF THE FACE OF THE RAIL.

⑦ USE LOWER HOLE ON NEW CONSTRUCTION INSTALLATIONS.

⑧ ON 7'6" [2.3m] WOOD POSTS BEGIN INSLOPE BREAK AT CENTER OF POST.

* SEE DTL. DWG. NO. 606-80 FOR SCHEDULE OF GUARDRAIL HARDWARE.

UNITS SHOWN IN BRACKETS [] ARE METRIC AND ARE IN MILLIMETERS (mm) UNLESS OTHER UNITS ARE SHOWN.

DETAILED DRAWING	
REFERENCE STANDARD SPEC. SECTION 606, 704	DWG. NO. 606-11A
METAL GUARDRAIL - LONG POSTS (WOOD)	
EFFECTIVE: SEPTEMBER 2014	
MDT MONTANA DEPARTMENT OF TRANSPORTATION	

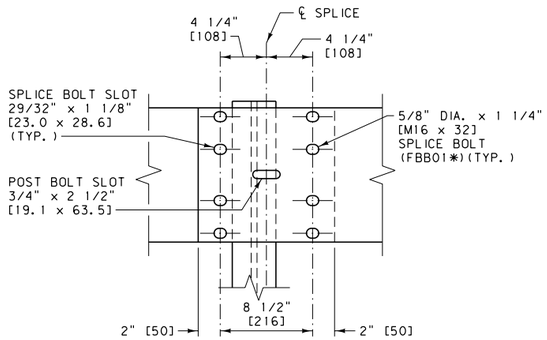

BEAM SPLICE

(LAP IN DIRECTION OF ADJACENT TRAFFIC)

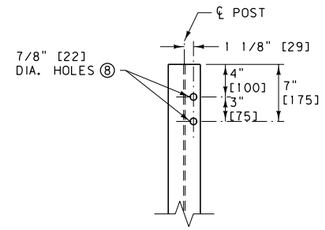

POST HOLE DETAIL

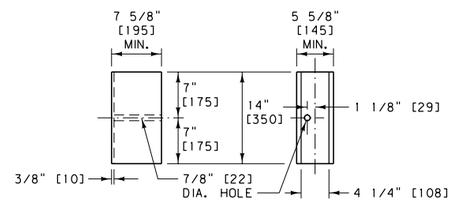

ROUTED WOOD BLOCK

PDB01*

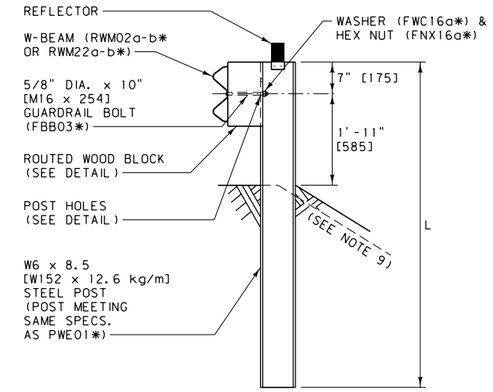

STEEL POST AND MOUNTING DETAIL

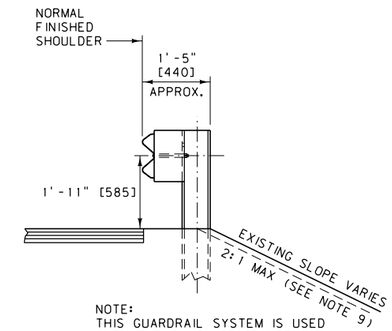

NOTE:
THIS GUARDRAIL SYSTEM IS USED WHEN THE 2'-0" [610] WIDENING BEHIND THE POSTS CANNOT BE PROVIDED, AS PER DTL. DWG. NO. 606-05A & 606-05B.

PROFILE

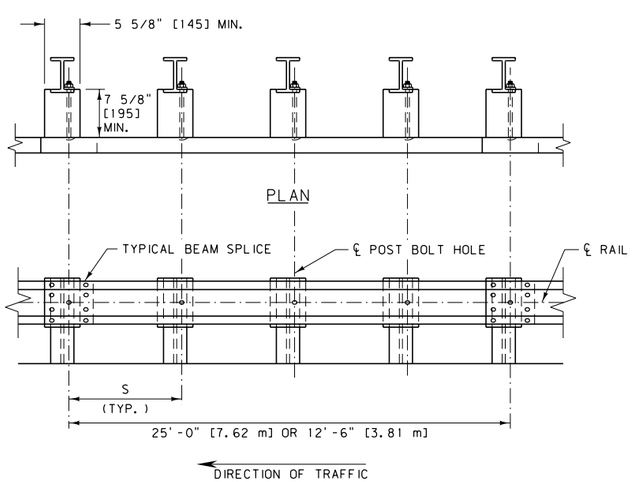

ELEVATION

STEEL POST LENGTH AND SPACING	
POST LENGTH (L)	POST SPACING (S)
7'-0" [2.1 m]	3'-1 1/2" [952.5]
9'-0" [2.7 m]	6'-3" [1905]

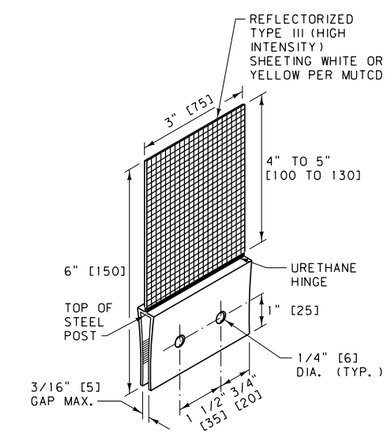

REFLECTOR

(SEE NOTE 3)

NOTES:

① INSTALL ALL BOLTS WITH HEADS ON TRAFFIC SIDE OF INSTALLATION.

② USE ROUTED WOOD BLOCKS OR OTHER NCHRP 350 APPROVED BLOCKS.

③ ATTACH REFLECTORS TO POSTS EVERY 25' [7.62 m], INCLUDING TERMINAL SECTIONS, WITH THE REFLECTORIZED SURFACE FACING ADJACENT TRAFFIC. FASTEN REFLECTOR TO STEEL POST USING AN APPROVED ADHESIVE. REFLECTORS MAY BE BOLTED TO POSTS PROVIDED HOLES IN POSTS ARE DRILLED BEFORE BEING GALVANIZED.

④ ON EXISTING GUARDRAIL INSTALLATIONS, THE MINIMUM RAIL HEIGHT IS 1'-8" [510].

⑤ STEEL POSTS WITH OTHER POST HOLE CONFIGURATIONS MAY BE ACCEPTED, PROVIDED THEY HAVE AT LEAST THE HOLES DETAILED ON THIS DRAWING AND THEY MEET AASHTO'S PUBLICATION, "A GUIDE TO STANDARDIZED HIGHWAY BARRIER HARDWARE" AND NCHRP 350 REQUIREMENTS.

⑥ THE W-BEAM RAIL ON THIS SYSTEM REQUIRES ADDITIONAL HOLES TO ACCOMMODATE BEING BOLTED TO POSTS AT HALF THE NORMAL POST SPACING. DRILL ADDITIONAL HOLES IN THE W-BEAM RAIL PRIOR TO APPLYING CORROSION PROTECTION.

⑦ DO NOT INSTALL W-BEAM GUARDRAIL WITH ANY POST LENGTH FOR OBSTACLES WITHIN 4.6' [1.4 m] OF THE FACE OF THE RAIL.

⑧ USE LOWER HOLE ON NEW CONSTRUCTION INSTALLATIONS.

⑨ ON 9'0" [2.7m] STEEL POSTS BEGIN INSLOPE BREAK AT CENTER OF POST.

* SEE DTL. DWG. NO. 606-80 FOR SCHEDULE OF GUARDRAIL HARDWARE.

UNITS SHOWN IN BRACKETS [] ARE METRIC AND ARE IN MILLIMETERS (mm) UNLESS OTHER UNITS ARE SHOWN.

DETAILED DRAWING	
REFERENCE STANDARD SPEC. SECTION 606	DWG. NO. 606-11B
METAL GUARDRAIL - LONG POSTS (METAL)	
EFFECTIVE: SEPTEMBER 2014	

MDT MONTANA DEPARTMENT OF TRANSPORTATION

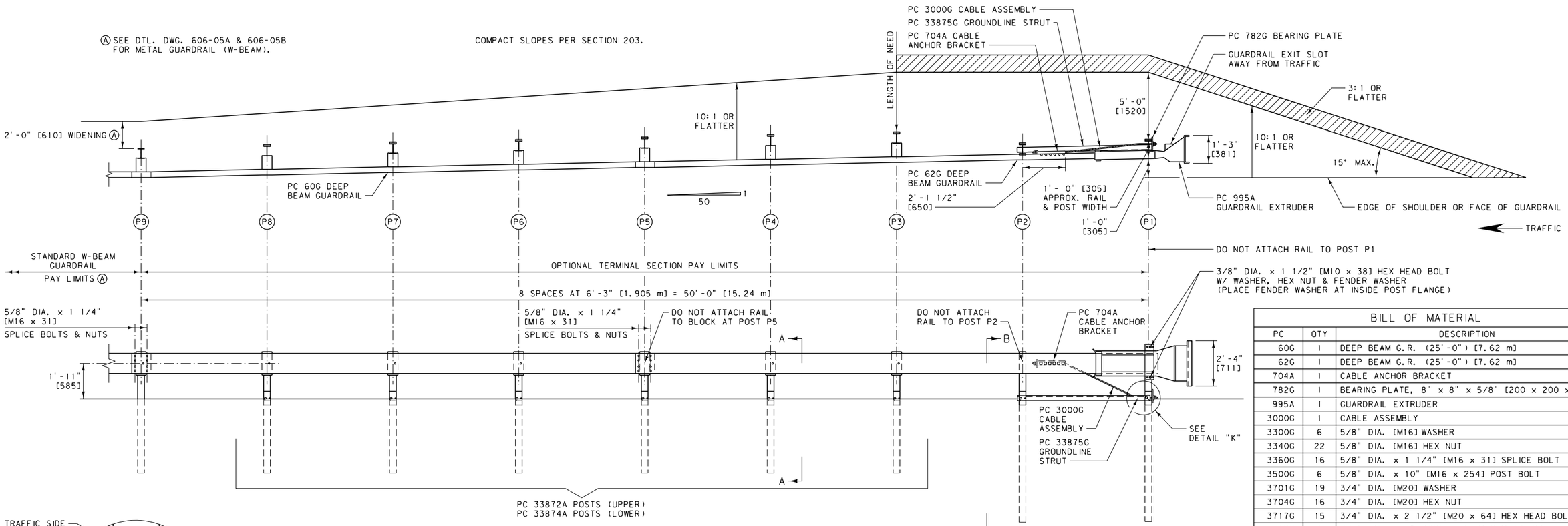

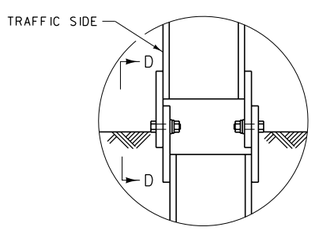

DETAIL D

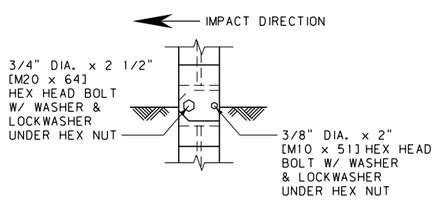

VIEW D-D

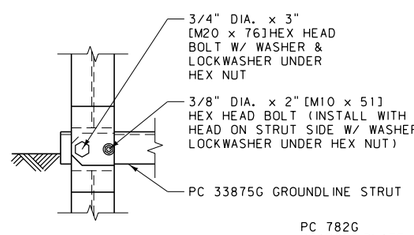

VIEW H-H

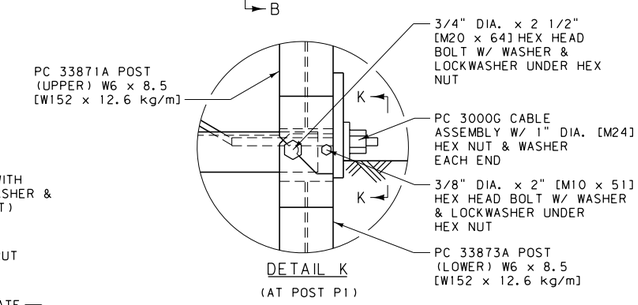

DETAIL K

(AT POST P1)

BILL OF MATERIAL		
PC	QTY	DESCRIPTION
60G	1	DEEP BEAM G.R. (25'-0") [7.62 m]
62G	1	DEEP BEAM G.R. (25'-0") [7.62 m]
704A	1	CABLE ANCHOR BRACKET
782G	1	BEARING PLATE, 8" x 8" x 5/8" [200 x 200 x 16]
995A	1	GUARDRAIL EXTRUDER
3000G	1	CABLE ASSEMBLY
3300G	6	5/8" DIA. [M16] WASHER
3340G	22	5/8" DIA. [M16] HEX NUT
3360G	16	5/8" DIA. x 1 1/4" [M16 x 31] SPLICE BOLT
3500G	6	5/8" DIA. x 10" [M16 x 254] POST BOLT
3701G	19	3/4" DIA. [M20] WASHER
3704G	16	3/4" DIA. [M20] HEX NUT
3717G	15	3/4" DIA. x 2 1/2" [M20 x 64] HEX HEAD BOLT
3718G	1	3/4" DIA. x 3" [M20 x 76] HEX HEAD BOLT
3900G	2	1" DIA. [M24] WASHER
3910G	2	1" DIA. [M24] HEX NUT
4076B	6	WOOD BLOCK, 6" x 8" x 1'-2" [150 x 200 x 350]
4254G	18	3/8" DIA. [M10] WASHER
4255G	2	3/8" DIA. [M10] FENDER WASHER (1 1/2" [38] O.D.)
4258G	16	3/8" DIA. [M10] LOCKWASHER
4261G	2	3/8" DIA. x 1 1/2" [M10 x 38] HEX HEAD BOLT
4699G	16	3/4" DIA. [M20] LOCKWASHER
6321G	16	3/8" DIA. x 2" [M10 x 51] HEX HEAD BOLT
6405G	18	3/8" DIA. [M10] HEX NUT
33871A	1	ETPLUS HBA POST P1 (UPPER)
33872A	7	ETPLUS HBA POST P2 TO P8 (UPPER)
33873A	2	ETPLUS HBA POST P1 & P2 (LOWER)
33874A	6	ETPLUS HBA POST P3 TO P8 (LOWER)
33875G	1	6'-6" [1981] ANGLE STRUT ET HBA

NOTE:

SECTION "A-A" IS SIMILAR AT POST P5 EXCEPT RAIL IS NOT ATTACHED.

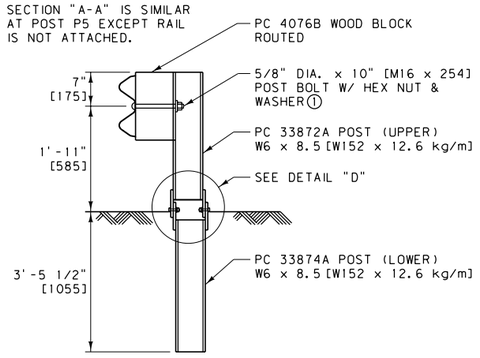

SECTION A-A

(TYP AT POSTS P3, P4, P6, P7 & P8)

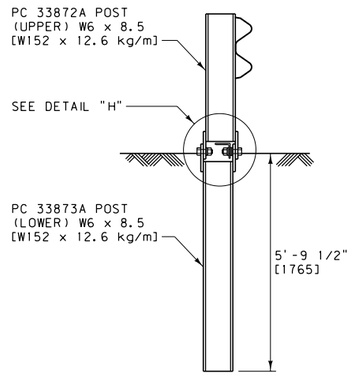

SECTION B-B

(AT POST P2)

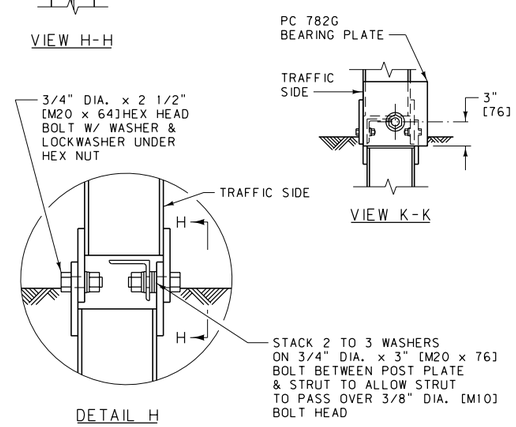

DETAIL H

(AT POST P2)

VIEW K-K

NOTES:

① THE 5/8" DIA. [M16] FLAT WASHER IS USED UNDER THE NUT, BEHIND THE POST ONLY. NO WASHER IS USED AT THE RAIL.

② USE THE ET-PLUS TERMINAL SECTION ON DIVIDED ROADWAYS IF THE WIDTH IS 25 FEET [7.5 m] OR GREATER BETWEEN FINISHED SURFACES. CONSIDER OTHER TERMINAL SECTIONS IF THE WIDTH IS LESS THAN 25 FEET [7.5 m] BETWEEN FINISHED SURFACES.

③ FLARE THE END SECTION AWAY FROM TRAFFIC AT A RATE OF 50:1 FOR 50 FEET [15.24 m] (ILLUSTRATED). FLARES OF 50:1 FOR 100 FEET [30.48 m] MAY ALSO BE USED. THE FLARE MAY BE OMITTED ON ROADS WITH SHOULDERS GREATER THAN 2 FEET [0.6 m] IN WIDTH.

④ PLACE A SELF-ADHESIVE OBJECT MARKER ON THE GUARDRAIL EXTRUDER FACE, HAVING ALTERNATING RETRO-REFLECTIVE BLACK AND YELLOW STRIPES SLOPED DOWNWARD AT AN ANGLE OF 45° TOWARDS THE SIDE ON WHICH TRAFFIC IS TO PASS.

⑤ ATTACH REFLECTORS TO TERMINAL SECTION POSTS, PER DTL. DWG. NO. 606-05A AND 606-05B.

⑥ OBTAIN ENGINEER'S APPROVAL OF MANUFACTURER INSTALLATION OPTIONS WHEN SITE CONDITIONS PREVENT THE USE OF THE OPTION SHOWN ON THIS DETAIL.

⑦ AFTER FINAL ASSEMBLY, RECHECK CABLE TO MAKE SURE IT IS TAUT AND HAS NOT RELAXED.

⑧ LAP ALL W-BEAM SPLICES IN THE DIRECTION OF ADJACENT TRAFFIC.

⑨ ON LOWER POSTS 1 TO 8, INSTALL TOP OF POST A MAXIMUM OF 4 INCHES [100] ABOVE GROUND.

UNITS SHOWN IN BRACKETS [ ] ARE METRIC AND ARE IN MILLIMETERS (mm) UNLESS OTHER UNITS ARE SHOWN.

DETAILED DRAWING

REFERENCE STANDARD SPEC. SECTION 606, 203

DWG. NO. 606-13A

OPTIONAL TERMINAL SECTION - ET-PLUS

EFFECTIVE: SEPTEMBER 2014

MDT MONTANA DEPARTMENT OF TRANSPORTATION

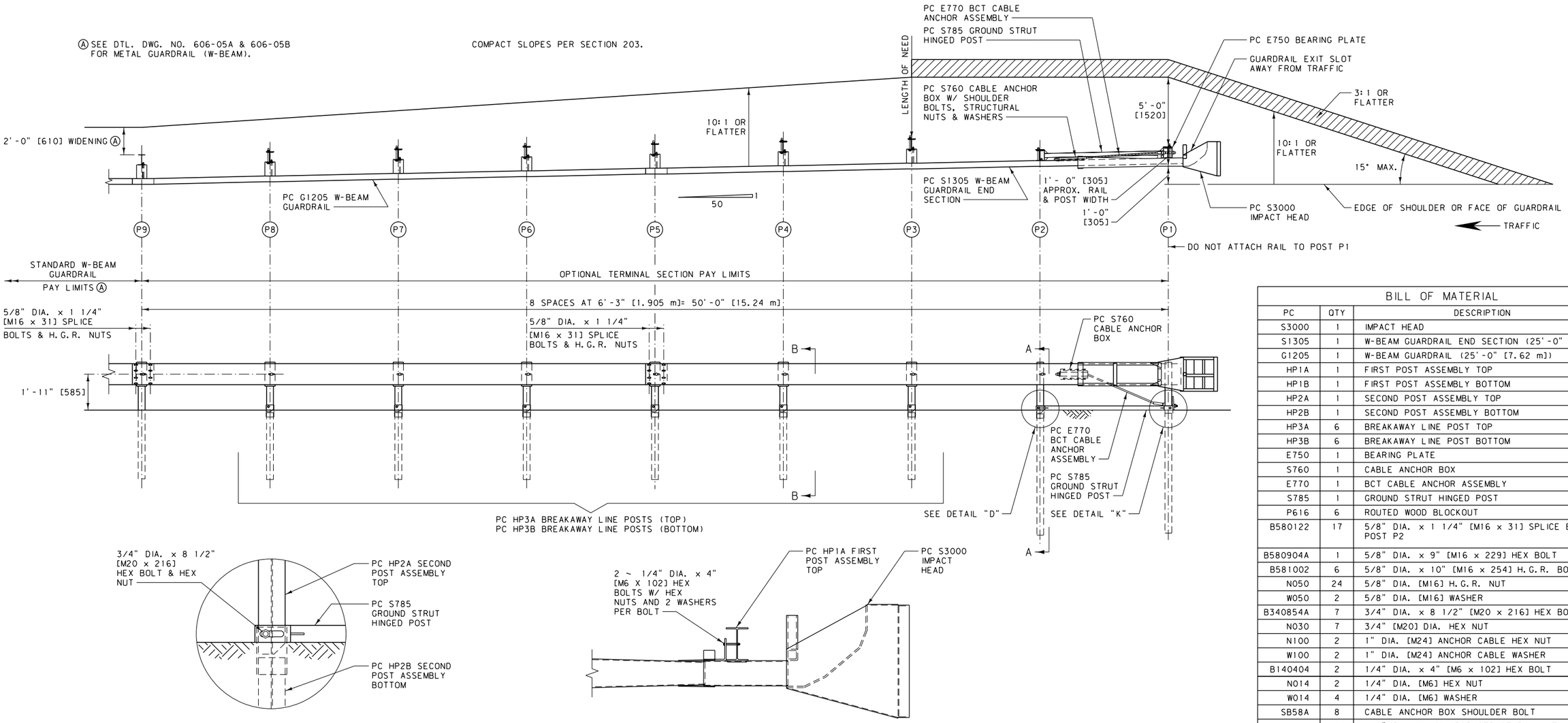

DETAIL D

(AT POST P2)

IMPACT HEAD CONNECTION DETAIL

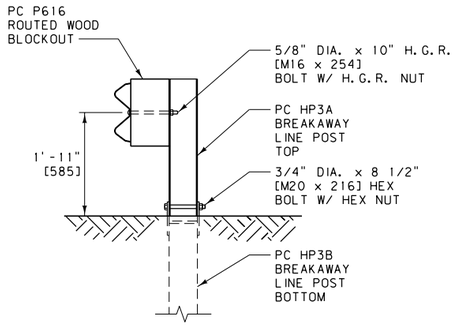

SECTION B-B

(TYP. AT POSTS P3 THRU P8)

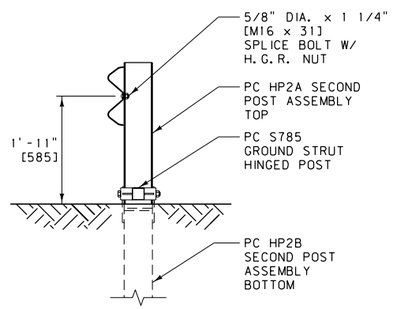

SECTION A-A

(AT POST P2)

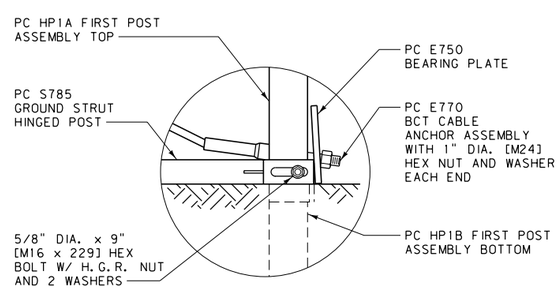

DETAIL K

(AT POST P1)

BILL OF MATERIAL

PC	QTY	DESCRIPTION
S3000	1	IMPACT HEAD
S1305	1	W-BEAM GUARDRAIL END SECTION (25'-0" [7.62 m])
G1205	1	W-BEAM GUARDRAIL (25'-0" [7.62 m])
HP1A	1	FIRST POST ASSEMBLY TOP
HP1B	1	FIRST POST ASSEMBLY BOTTOM
HP2A	1	SECOND POST ASSEMBLY TOP
HP2B	1	SECOND POST ASSEMBLY BOTTOM
HP3A	6	BREAKAWAY LINE POST TOP
HP3B	6	BREAKAWAY LINE POST BOTTOM
E750	1	BEARING PLATE
S760	1	CABLE ANCHOR BOX
E770	1	BCT CABLE ANCHOR ASSEMBLY
S785	1	GROUND STRUT HINGED POST
P616	6	ROUTED WOOD BLOCKOUT
B580122	17	5/8" DIA. x 1 1/4" [M16 x 31] SPLICE BOLT, POST P2
B580904A	1	5/8" DIA. x 9" [M16 x 229] HEX BOLT
B581002	6	5/8" DIA. x 10" [M16 x 254] H.G.R. BOLT
N050	24	5/8" DIA. [M16] H.G.R. NUT
W050	2	5/8" DIA. [M16] WASHER
B340854A	7	3/4" DIA. x 8 1/2" [M20 x 216] HEX BOLT
N030	7	3/4" [M20] DIA. HEX NUT
N100	2	1" DIA. [M24] ANCHOR CABLE HEX NUT
W100	2	1" DIA. [M24] ANCHOR CABLE WASHER
B140404	2	1/4" DIA. x 4" [M6 x 102] HEX BOLT
N014	2	1/4" DIA. [M6] HEX NUT
W014	4	1/4" DIA. [M6] WASHER
SB58A	8	CABLE ANCHOR BOX SHOULDER BOLT
N055A	8	1/2" DIA. [M12] A325 STRUCTURAL NUT
W050A	16	9/16" DIA. [M14] (1 1/16" [27] O.D.) A325 STRUCTURAL WASHER

NOTES:

1. USE THE SKT 350 TERMINAL SECTION ON DIVIDED ROADWAYS IF THE WIDTH IS 25 FEET [7.5 m]OR GREATER BETWEEN FINISHED SURFACES. CONSIDER OTHER TERMINAL SECTIONS IF THE WIDTH IS LESS THAN 25 FEET [7.5 m] BETWEEN FINISHED SURFACES.
2. FLARE THE END SECTION AWAY FROM TRAFFIC AT A RATE OF 50:1 FOR 50 FEET [15.24 m](ILLUSTRATED). FLARES OF 50:1 FOR 100 FEET [30.48 m]MAY ALSO BE USED. THE FLARE MAY BE OMITTED ON ROADS WITH SHOULDERS GREATER THAN 2 FEET [0.6 m]IN WIDTH.
3. PLACE A SELF-ADHESIVE OBJECT MARKER ON THE GUARDRAIL IMPACT HEAD FACE, HAVING ALTERNATING RETRO-REFLECTIVE BLACK AND YELLOW STRIPES SLOPED DOWNWARD AT AN ANGLE OF 45° TOWARDS THE SIDE ON WHICH TRAFFIC IS TO PASS.
4. ATTACH REFLECTORS TO TERMINAL SECTION POSTS, PER DTL. DWG. NO. 606-05A AND 606-05B.
5. AFTER FINAL ASSEMBLY, RECHECK CABLE TO MAKE SURE IT IS TAUT AND HAS NOT RELAXED.
6. OBTAIN ENGINEER'S APPROVAL OF MANUFACTURER INSTALLATION OPTIONS WHEN SITE CONDITIONS PREVENT THE USE OF THE OPTION SHOWN ON THIS DETAIL.
7. LAP ALL W-BEAM SPLICES IN THE DIRECTION OF ADJACENT TRAFFIC.
8. ON LOWER POSTS 1 TO 8, INSTALL TOP OF POST A MAXIMUM OF 4 INCHES [100]ABOVE GROUND.

UNITS SHOWN IN BRACKETS [] ARE METRIC AND ARE IN MILLIMETERS (mm) UNLESS OTHER UNITS ARE SHOWN.

DETAILED DRAWING

REFERENCE STANDARD SPEC. SECTION 606, 203

DWG. NO. 606-13B

OPTIONAL TERMINAL SECTION - SKT 350

EFFECTIVE: SEPTEMBER 2014

MDT MONTANA DEPARTMENT OF TRANSPORTATION

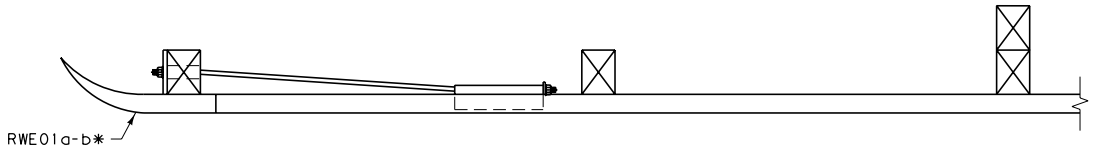

PLAN

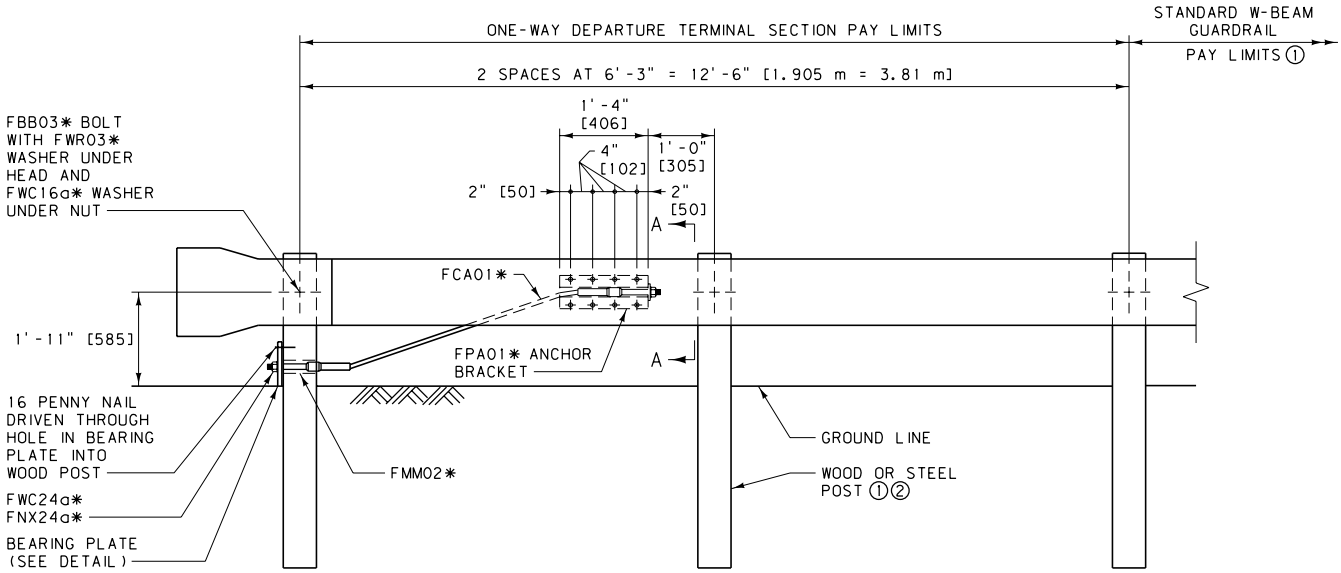

ELEVATION

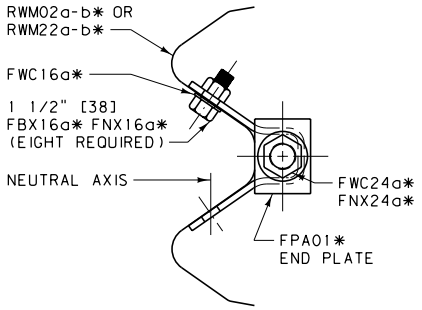

SECTION A-A

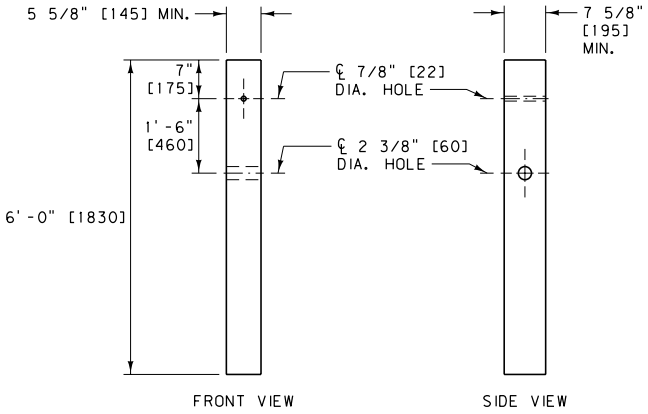

END POST DETAILS

PDF03*

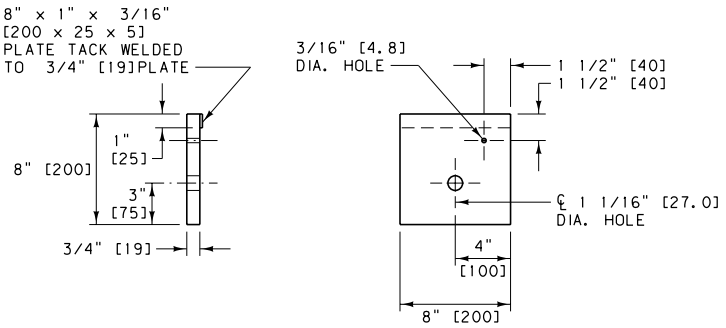

BEARING PLATE DETAIL

FPB01*

UNITS SHOWN IN BRACKETS [] ARE METRIC AND ARE IN MILLIMETERS (mm) UNLESS OTHER UNITS ARE SHOWN.

NOTE:

① SEE DTL. DWG. NO. 606-05A AND 606-05B FOR METAL GUARDRAIL (W-BEAM).

② DO NOT USE ROUND POSTS.

* SEE DTL. DWG. NO. 606-80 FOR SCHEDULE OF GUARDRAIL HARDWARE.

DETAILED DRAWING	
REFERENCE STANDARD SPEC. SECTION 606	DWG. NO. 606-18
ONE-WAY DEPARTURE TERMINAL SECTION	
EFFECTIVE: SEPTEMBER 2014	
MDT MONTANA DEPARTMENT OF TRANSPORTATION	

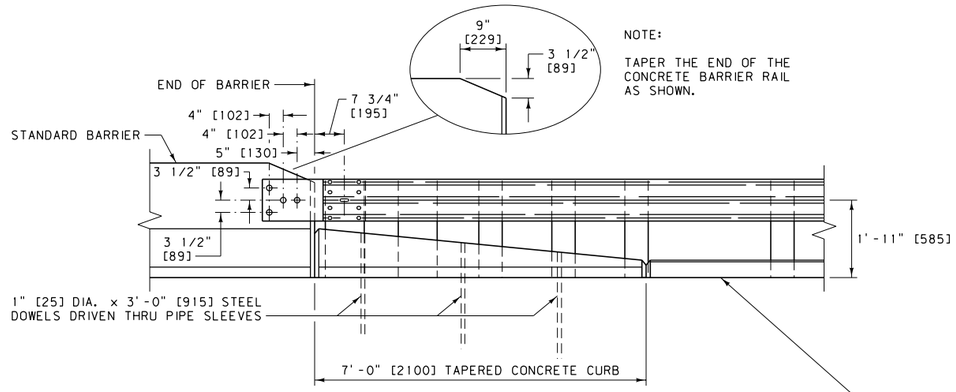

NOTE:

TAPER THE END OF THE CONCRETE BARRIER RAIL AS SHOWN.

ELEVATION

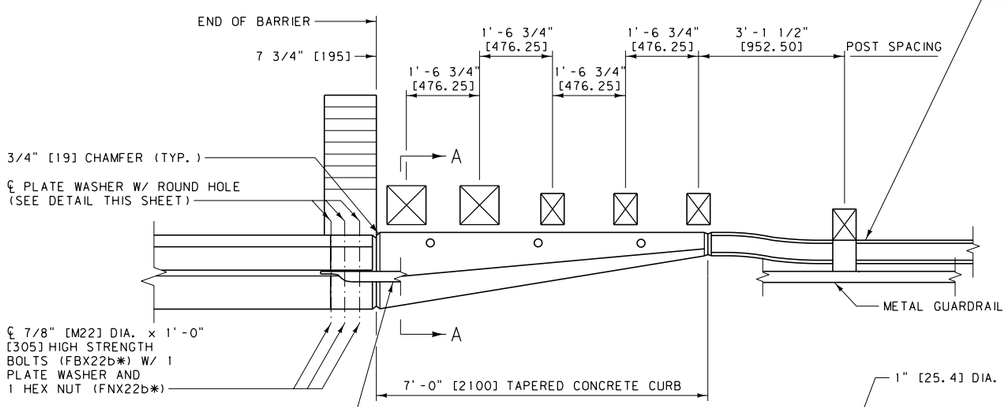

PLAN

STD. BIT. CURB (WHERE REQUIRED-
SEE ROAD PLANS) (WARP AS NECESSARY
TO MEET END OF THE TAPERED CONCRETE
CURB)

DETAIL "A"

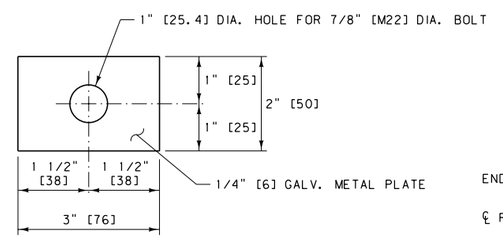

PLATE WASHER

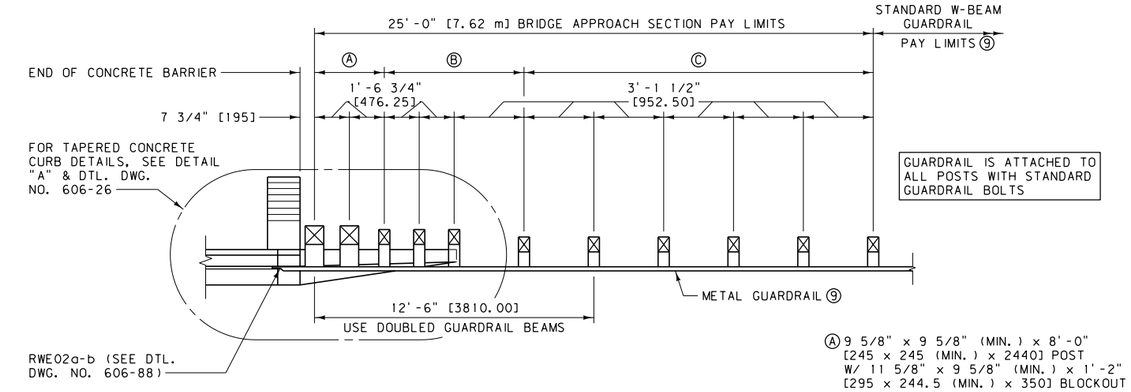

Ⓐ 9 5/8" x 9 5/8" (MIN.) x 8'-0"
[245 x 245 (MIN.) x 2440] POST
W/ 11 5/8" x 9 5/8" (MIN.) x 1'-2"
[295 x 244.5 (MIN.) x 350] BLOCKOUT

Ⓑ 7 5/8" x 5 5/8" x 7'-0"
[195 x 145 x 2135] POST
W/ 11 5/8" x 5 5/8" (MIN.) x 1'-2"
[295 x 145 (MIN.) x 350] BLOCKOUT

Ⓒ 7 5/8" x 5 5/8" x 6'-0"
[195 x 145 x 1830] POST
W/ 7 5/8" x 5 5/8" (MIN.) x 1'-2"
[195 x 145 (MIN.) x 350] BLOCKOUT

METAL GUARDRAIL-BRIDGE APPROACH SECTION TYPE 1

(FOR BRIDGES USING CONCRETE BARRIER RAIL)

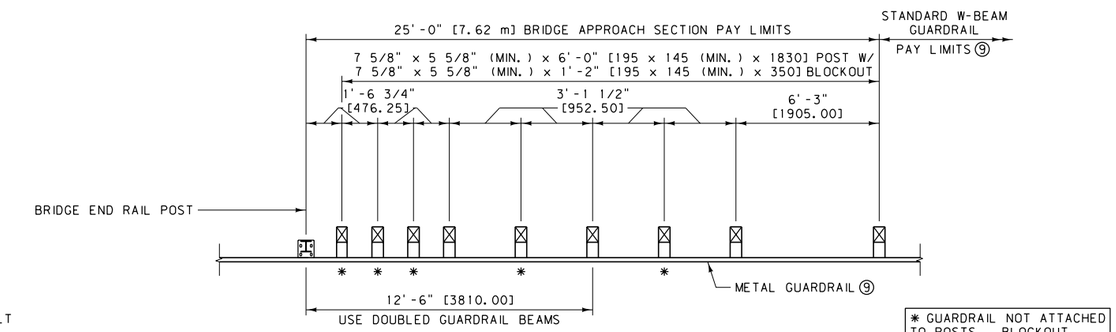

* GUARDRAIL NOT ATTACHED
TO POSTS. BLOCKOUT
FASTENED TO POST WITH
STANDARD POST BOLT.

METAL GUARDRAIL-BRIDGE APPROACH SECTION TYPE 2

(FOR BRIDGES WITHOUT CURBS)

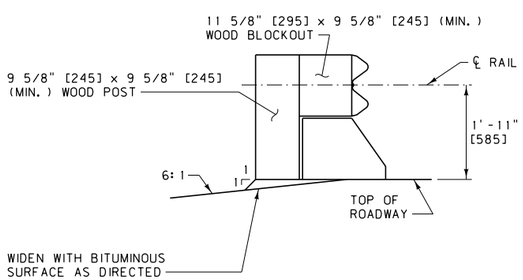

SECTION A-A

NOTES:

① TAPERED CONCRETE CURBS:
TYPE 1, SEE DTL. DWG. NO. 606-26
TYPE 3, SEE DTL. DWG. NO. 606-27

② TAPERED CONCRETE CURBS ARE ALSO REQUIRED ON CONCRETE APPROACH SLABS.

③ PORTIONS OF GUARDRAIL & BLOCKOUTS ARE OMITTED FOR CLARITY.

④ LAP GUARDRAIL IN THE DIRECTION OF THE ADJACENT TRAFFIC LANE. (SEE DTL. DWG. NO. 606-05A).

⑤ LAP W-BEAM TERMINAL CONNECTOR (RWE02a-b) IN THE DIRECTION OF THE ADJACENT TRAFFIC LANE.

⑥ USE WOOD BLOCKS OR OTHER NCHRP 350 APPROVED BLOCKS FOR BLOCKOUTS.

⑦ DO NOT FLARE BRIDGE APPROACH SECTIONS.

⑧ SEE DTL. DWG. NO. 606-25A FOR SKEWED BRIDGES.

⑨ SEE DTL. DWG. NO. 606-05A FOR METAL GUARDRAIL (W-BEAM).

* SEE DTL. DWG. NO. 606-80 FOR SCHEDULE OF GUARDRAIL HARDWARE.

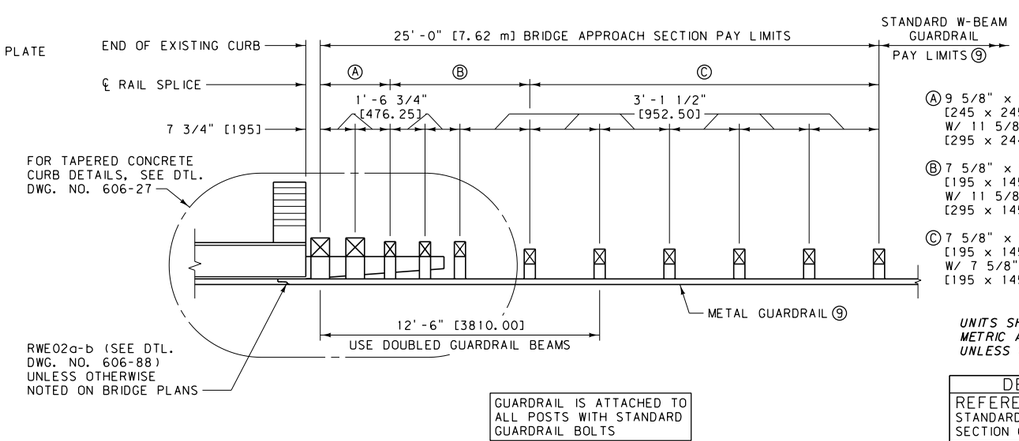

Ⓐ 9 5/8" x 9 5/8" (MIN.) x 8'-0"
[245 x 245 (MIN.) x 2440] POST
W/ 11 5/8" x 9 5/8" (MIN.) x 1'-2"
[295 x 244.5 (MIN.) x 350] BLOCKOUT

Ⓑ 7 5/8" x 5 5/8" x 7'-0"
[195 x 145 x 2135] POST
W/ 11 5/8" x 5 5/8" (MIN.) x 1'-2"
[295 x 145 (MIN.) x 350] BLOCKOUT

Ⓒ 7 5/8" x 5 5/8" x 6'-0"
[195 x 145 x 1830] POST
W/ 7 5/8" x 5 5/8" (MIN.) x 1'-2"
[195 x 145 (MIN.) x 350] BLOCKOUT

METAL GUARDRAIL-BRIDGE APPROACH SECTION TYPE 3

(FOR BRIDGES WITH EXISTING CONCRETE CURBS)

UNITS SHOWN IN BRACKETS [] ARE METRIC AND ARE IN MILLIMETERS (mm) UNLESS OTHER UNITS ARE SHOWN.

DETAILED DRAWING	
REFERENCE STANDARD SPEC. SECTION 606	DWG. NO. 606-24A
BRIDGE APPROACH SECTIONS - WOOD POSTS	
EFFECTIVE: SEPTEMBER 2014	

MDT MONTANA DEPARTMENT OF TRANSPORTATION

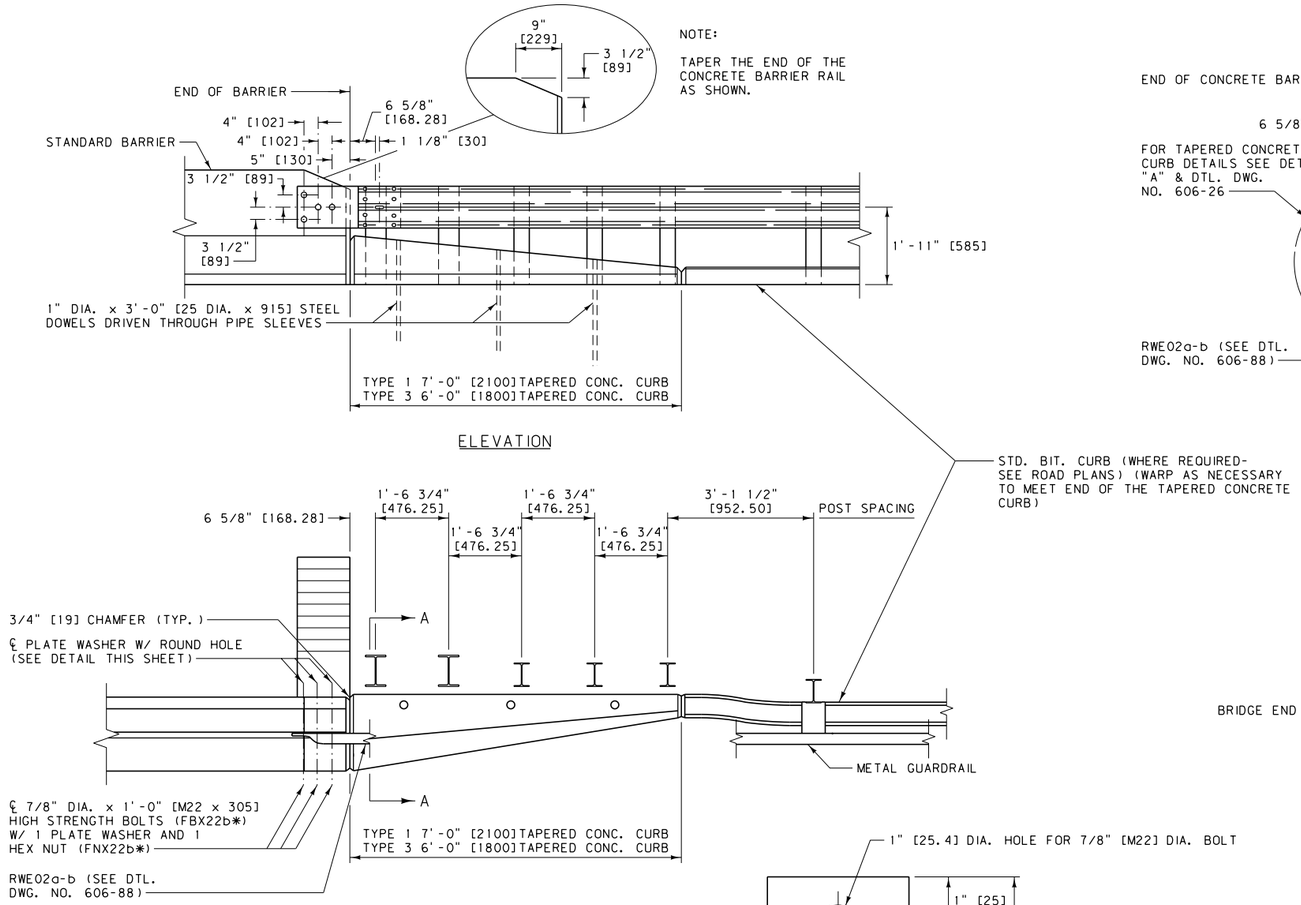

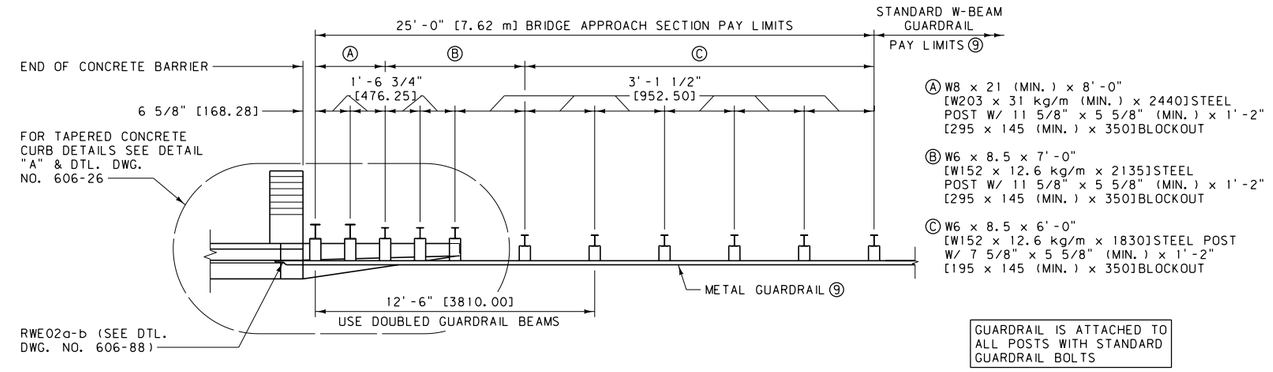

METAL GUARDRAIL-BRIDGE APPROACH SECTION TYPE 1

(FOR BRIDGES USING CONCRETE BARRIER RAIL)

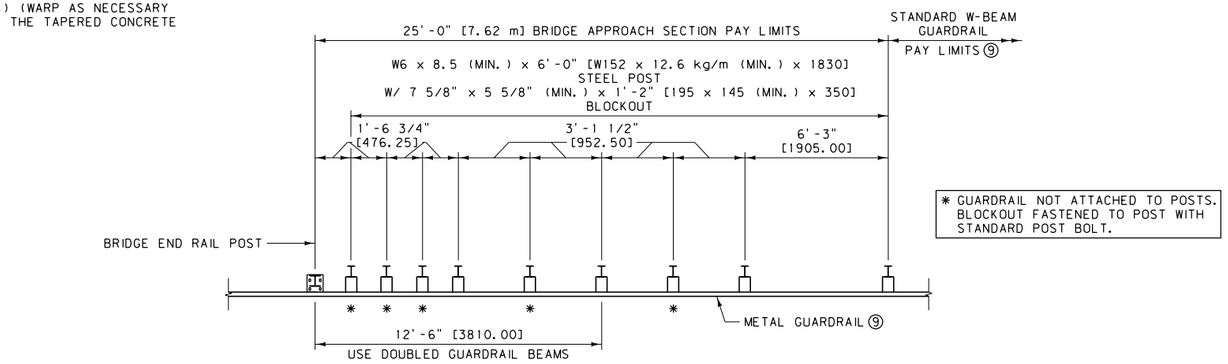

METAL GUARDRAIL-BRIDGE APPROACH SECTION TYPE 2

(FOR BRIDGES WITHOUT CURBS)

DETAIL "A"

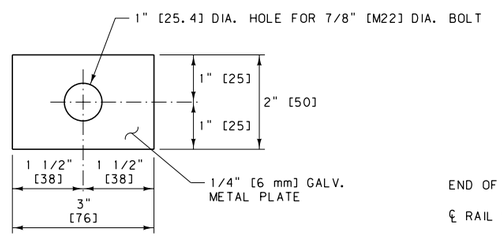

PLATE WASHER

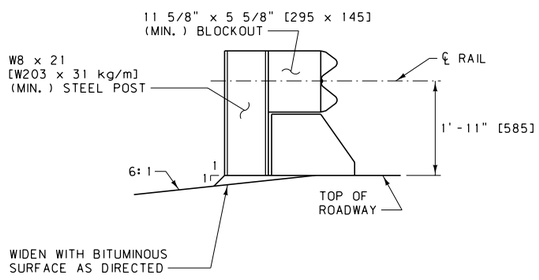

SECTION A-A

NOTES:

① TAPERED CONCRETE CURBS:
TYPE 1, SEE DTL. DWG. NO. 606-26
TYPE 3, SEE DTL. DWG. NO. 606-27

② TAPERED CONCRETE CURBS ARE ALSO REQUIRED ON CONCRETE APPROACH SLABS.

③ PORTIONS OF GUARDRAIL & BLOCKOUTS ARE OMITTED FOR CLARITY.

④ LAP GUARDRAIL IN THE DIRECTION OF THE ADJACENT TRAFFIC LANE. (SEE DTL. DWG. NO. 606-05B).

⑤ LAP W-BEAM TERMINAL CONNECTOR (RWE02a-b) IN THE DIRECTION OF THE ADJACENT TRAFFIC LANE.

⑥ USE ROUTED WOOD BLOCKS OR OTHER NCHRP 350 APPROVED BLOCKS FOR BLOCKOUTS.

⑦ DO NOT FLARE BRIDGE APPROACH SECTIONS.

⑧ SEE DTL. DWG. NO. 606-25B FOR SKEWED BRIDGES.

⑨ SEE DTL. DWG. NO. 606-05B FOR METAL GUARDRAIL (W-BEAM).

* SEE DTL. DWG. NO. 606-80 FOR SCHEDULE OF GUARDRAIL HARDWARE.

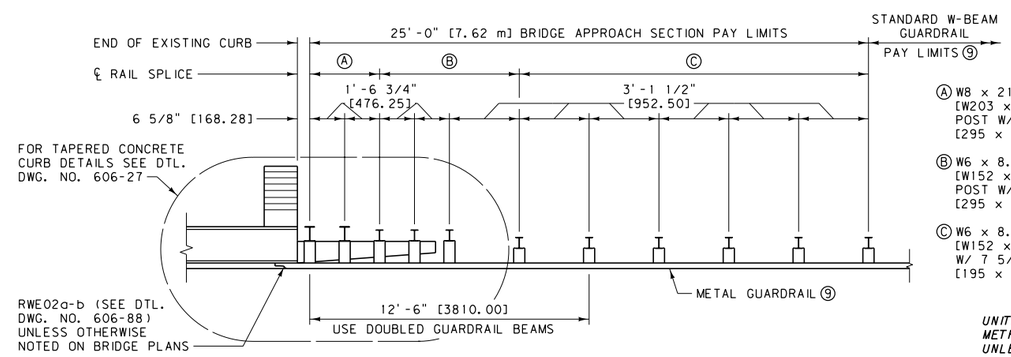

METAL GUARDRAIL-BRIDGE APPROACH SECTION TYPE 3

(FOR BRIDGES WITH EXISTING CONCRETE CURBS)

UNITS SHOWN IN BRACKETS [] ARE METRIC AND ARE IN MILLIMETERS (mm) UNLESS OTHER UNITS ARE SHOWN.

DETAILED DRAWING	
REFERENCE STANDARD SPEC. SECTION 606	DWG. NO. 606-24B
BRIDGE APPROACH SECTIONS - STEEL POSTS	
EFFECTIVE: SEPTEMBER 2014	

MDT MONTANA DEPARTMENT OF TRANSPORTATION

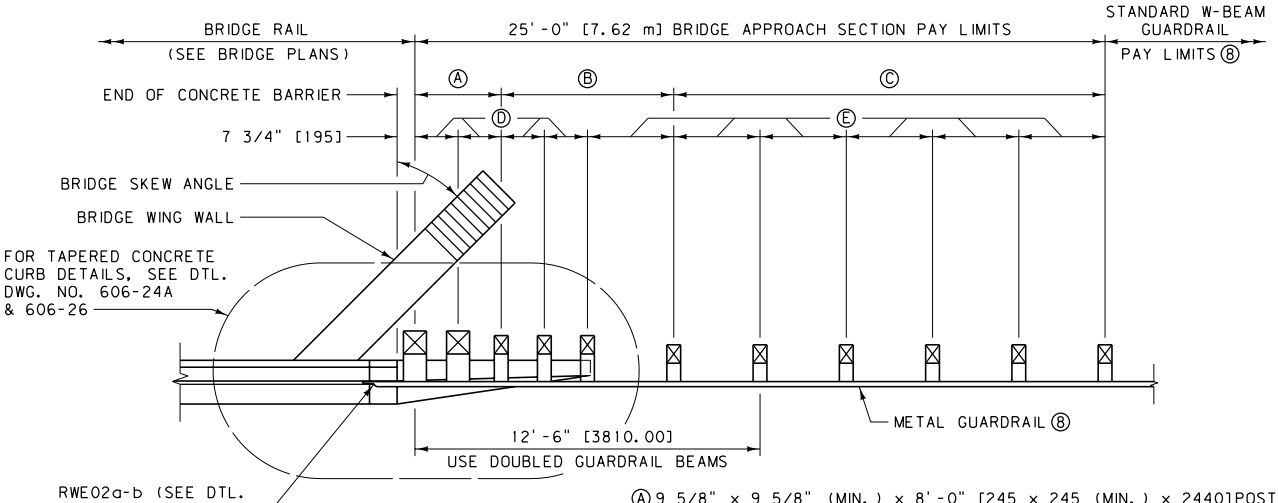

GUARDRAIL IS ATTACHED TO ALL POSTS WITH STANDARD GUARDRAIL BOLTS

Ⓐ 9 5/8" x 9 5/8" (MIN.) x 8'-0" [245 x 245 (MIN.) x 2440]POST
W/ 11 5/8" x 9 5/8" (MIN.) x 1'-2" [295 x 245 (MIN.) x 350] BLOCKOUT

Ⓑ 7 5/8" x 5 5/8" x 7'-0" [195 x 145 x 2135]POST
W/ 11 5/8" x 5 5/8" (MIN.) x 1'-2" [295 x 145 (MIN.) x 350]BLOCKOUT

Ⓒ 7 5/8" x 5 5/8" x 6'-0" [195 x 145 x 1830]POST
W/ 7 5/8" x 5 5/8" (MIN.) x 1'-2" [195 x 145 (MIN.) x 350]BLOCKOUT

Ⓓ 1'-6 3/4" [476.25]

Ⓔ 3'-1 1/2" [952.50]

METAL GUARDRAIL-BRIDGE APPROACH SECTION TYPE 1

(FOR SKEWED BRIDGES USING CONCRETE BARRIER RAIL)

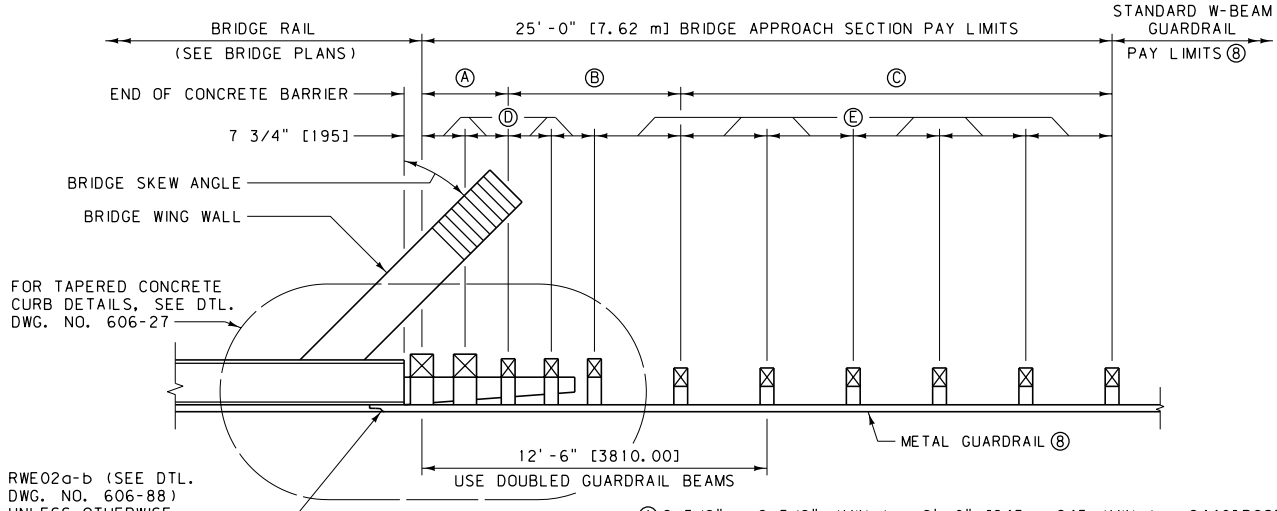

GUARDRAIL IS ATTACHED TO ALL POSTS WITH STANDARD GUARDRAIL BOLTS

Ⓐ 9 5/8" x 9 5/8" (MIN.) x 8'-0" [245 x 245 (MIN.) x 2440]POST
W/ 11 5/8" x 9 5/8" (MIN.) x 1'-2" [295 x 245 (MIN.) x 350] BLOCKOUT

Ⓑ 7 5/8" x 5 5/8" x 7'-0" [195 x 145 x 2135]POST
W/ 11 5/8" x 5 5/8" (MIN.) x 1'-2" [295 x 145 (MIN.) x 350]BLOCKOUT

Ⓒ 7 5/8" x 5 5/8" x 6'-0" [195 x 145 x 1830]POST
W/ 7 5/8" x 5 5/8" (MIN.) x 1'-2" [195 x 145 (MIN.) x 350]BLOCKOUT

Ⓓ 1'-6 3/4" [476.25]

Ⓔ 3'-1 1/2" [952.50]

METAL GUARDRAIL-BRIDGE APPROACH SECTION TYPE 3

(FOR SKEWED BRIDGES WITH EXISTING CONCRETE CURBS)

NOTES:

① TAPERED CONCRETE CURBS:
TYPE 1, SEE DTL. DWG. NO. 606-26
TYPE 3, SEE DTL. DWG. NO. 606-27

② TAPERED CONCRETE CURBS ARE ALSO REQUIRED ON CONCRETE APPROACH SLABS.

③ LAP GUARDRAIL IN THE DIRECTON OF THE ADJACENT TRAFFIC LANE. (SEE DTL. DWG. NO. 606-05A).

④ LAP W-BEAM TERMINAL CONNECTOR (RWE02a-b) IN THE DIRECTION OF THE ADJACENT TRAFFIC LANE.

⑤ USE WOOD BLOCKS OR OTHER NCHRP 350 APPROVED BLOCKS FOR BLOCKOUTS.

⑥ DO NOT FLARE BRIDGE APPROACH SECTIONS.

⑦ SEE DTL. DWG. NO. 606-24A FOR ADDITIONAL INFORMATION.

⑧ SEE DTL. DWG. NO. 606-05A FOR METAL GUARDRAIL (W-BEAM).

UNITS SHOWN IN BRACKETS [] ARE METRIC AND ARE IN MILLIMETERS (mm) UNLESS OTHER UNITS ARE SHOWN.

DETAILED DRAWING	
REFERENCE STANDARD SPEC. SECTION 606	DWG. NO. 606-25A
SKEWED BRIDGE APPROACH SECTIONS - WOOD POSTS	
EFFECTIVE: SEPTEMBER 2014	
MDT MONTANA DEPARTMENT OF TRANSPORTATION	

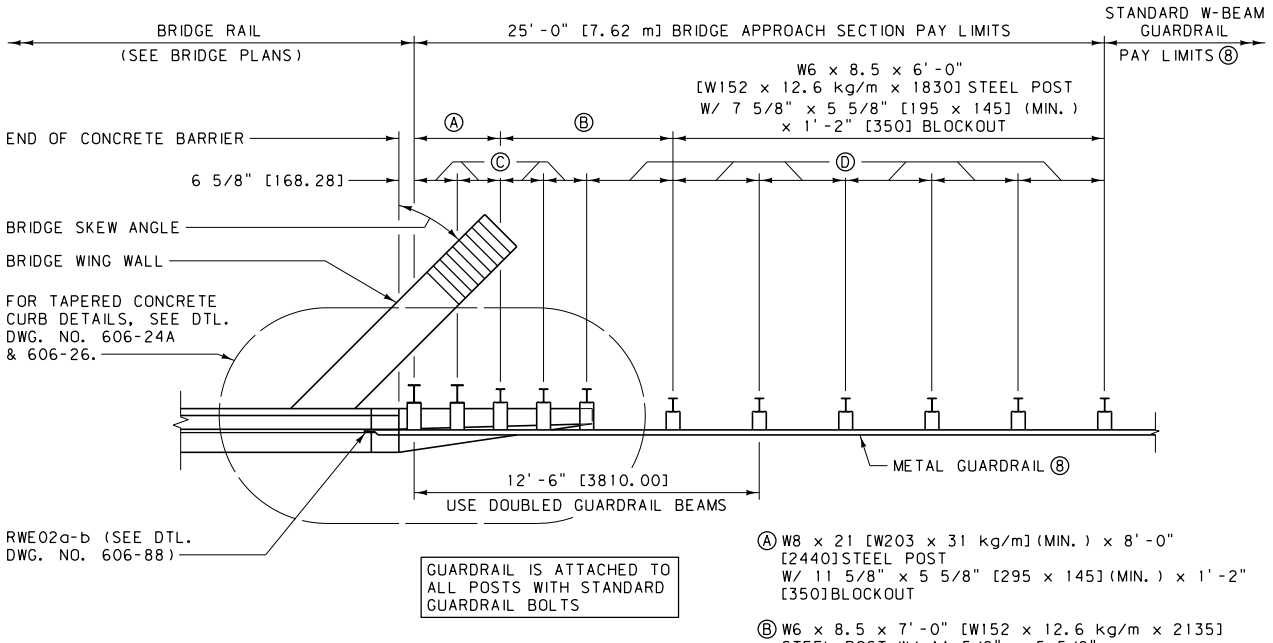

Ⓐ W8 x 21 [W203 x 31 kg/m] (MIN.) x 8'-0" [2440] STEEL POST W/ 11 5/8" x 5 5/8" [295 x 145] (MIN.) x 1'-2" [350] BLOCKOUT

Ⓑ W6 x 8.5 x 7'-0" [W152 x 12.6 kg/m x 2135] STEEL POST W/ 11 5/8" x 5 5/8" [295 x 145] (MIN.) x 1'2" [350] BLOCKOUT

Ⓒ 1'-6 3/4" [476.25] SPACING BETWEEN POSTS

Ⓓ 3'-1 1/2" [952.50] SPACING BETWEEN POSTS

METAL GUARDRAIL-BRIDGE APPROACH SECTION TYPE 1

(FOR SKEWED BRIDGES USING CONCRETE BARRIER RAIL)

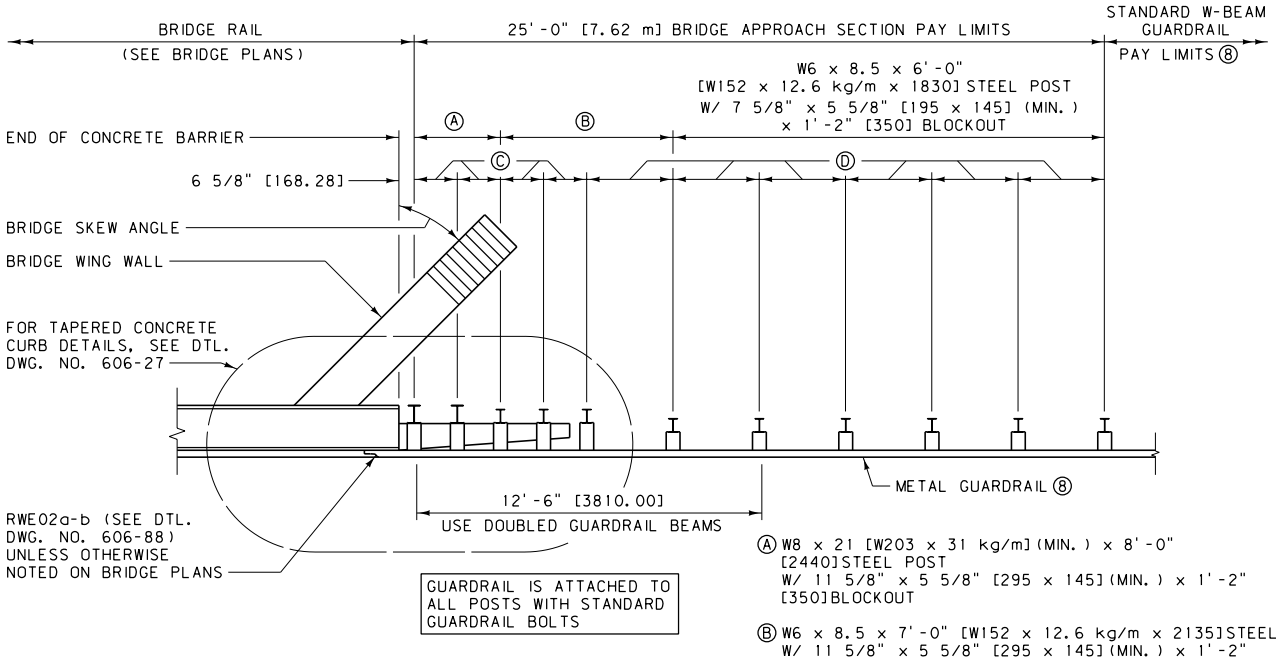

Ⓐ W8 x 21 [W203 x 31 kg/m] (MIN.) x 8'-0" [2440] STEEL POST W/ 11 5/8" x 5 5/8" [295 x 145] (MIN.) x 1'-2" [350] BLOCKOUT

Ⓑ W6 x 8.5 x 7'-0" [W152 x 12.6 kg/m x 2135] STEEL POST W/ 11 5/8" x 5 5/8" [295 x 145] (MIN.) x 1'-2" [350] BLOCKOUT

Ⓒ 1'-6 3/4" [476.25] SPACING BETWEEN POSTS

Ⓓ 3'-1 1/2" [952.50] SPACING BETWEEN POSTS

METAL GUARDRAIL-BRIDGE APPROACH SECTION TYPE 3

(FOR SKEWED BRIDGES WITH EXISTING CONCRETE CURBS)

NOTES:

① TAPERED CONCRETE CURBS:
TYPE 1, SEE DTL. DWG. NO. 606-26
TYPE 3, SEE DTL. DWG. NO. 606-27

② TAPERED CONCRETE CURBS ARE ALSO REQUIRED ON CONCRETE APPROACH SLABS.

③ LAP GUARDRAIL IN THE DIRECTION OF THE ADJACENT TRAFFIC LANE. (SEE DTL. DWG. NO. 606-05B).

④ LAP W-BEAM TERMINAL CONNECTOR (RWE02a-b) IN THE DIRECTION OF THE ADJACENT TRAFFIC LANE.

⑤ USE WOOD BLOCKS OR OTHER NCHRP 350 APPROVED BLOCKS FOR BLOCKOUTS.

⑥ DO NOT FLARE BRIDGE APPROACH SECTIONS.

⑦ SEE DTL. DWG. NO. 606-24B FOR ADDITIONAL INFORMATION.

⑧ SEE DTL. DWG. NO. 606-05B FOR METAL GUARDRAIL (W-BEAM).

UNITS SHOWN IN BRACKETS [] ARE METRIC AND ARE IN MILLIMETERS (mm) UNLESS OTHER UNITS ARE SHOWN.

DETAILED DRAWING	
REFERENCE STANDARD SPEC. SECTION 606	DWG. NO. 606-25B
SKEWED BRIDGE APPROACH SECTIONS - STEEL POSTS	
EFFECTIVE: SEPTEMBER 2014	
MDT MONTANA DEPARTMENT OF TRANSPORTATION	

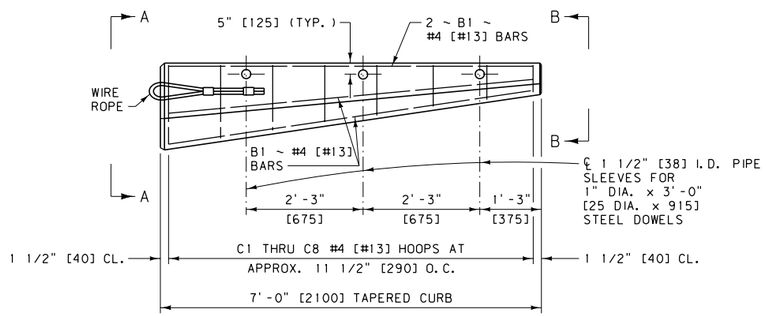

PLAN

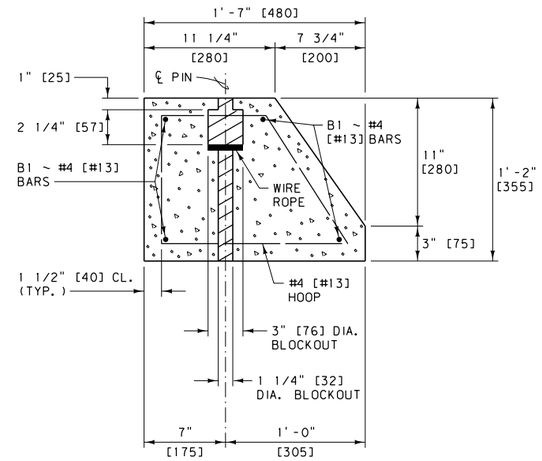

VIEW A-A

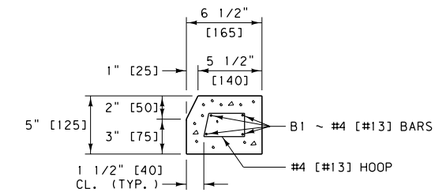

VIEW B-B

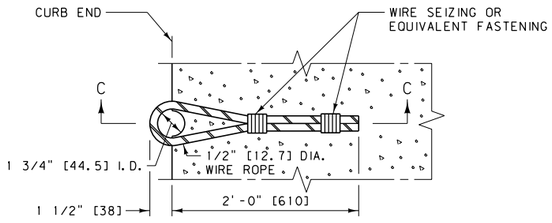

WIRE ROPE DETAIL

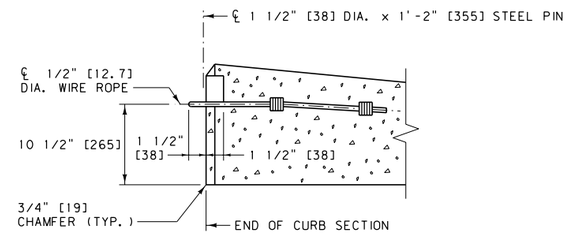

SECTION C-C

NOTES:

1. TAPERED CONCRETE CURB IS USED WITH BRIDGE APPROACH SECTION TYPE 1 (SEE DTL. DWG. NO. 606-24A AND 606-24B).
2. FURNISH WIRE ROPE MEETING SECTION 705.
3. FURNISH GRADE 60 [420] REINFORCING STEEL MEETING SECTION 711..
4. ALL CONCRETE IS CLASS GENERAL.
   TOTAL CONCRETE PER 7' [2100 mm] TAPERED CURB EST. = 0.2 C.Y. [0.17 m³]
   TOTAL REBAR WEIGHT PER 7' [2100 mm] TAPERED CURB EST. = 34 LB [15.1 kg].

BILL OF REINFORCING STEEL (ONE SECTION ONLY)

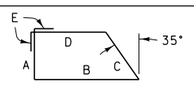

TYPE 1

BENT BARS (ALL DIMENSIONS ARE OUT TO OUT)

MARK	SIZE	NO.	TYPE	LENGTH	A	B	C	D	E
C1	#4	1	1	4'-8"	11"	1'-4"	1'-1"	9"	3 1/2"
C2				4'-2"	9 1/2"	1'-2"	11 1/2"	8"	
C3				3'-9"	8 1/2"	1'- 1/2"	10"	7"	
C4				3'-3"	7"	10 1/2"	8"	6 1/2"	
C5				2'-11"	6"	9"	7"	6"	
C6				2'-4"	4"	7"	5"	5"	
C7				2'-0"	3 1/2"	5 1/2"	3 1/2"	4 1/2"	3 1/2"
C8		1	1	1'-6"	2"	3 1/2"	2"	3 1/2"	1 1/2"
B1	#4	4	STRAIGHT	6'-9"	~	~	~	~	~

METRIC BILL OF REINFORCING STEEL (ONE SECTION ONLY)

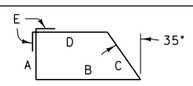

TYPE 1

BENT BARS (ALL DIMENSIONS ARE OUT TO OUT IN mm)

MARK	SIZE	NO.	TYPE	LENGTH	A	B	C	D	E
C1	#13	1	1	1360	270	395	330	205	80
C2				1225	240	350	290	185	
C3				1090	205	310	255	160	
C4				955	175	265	215	140	
C5				820	145	220	175	120	
C6				695	115	180	140	100	
C7				555	80	135	100	80	80
C8		1	1	415	50	90	60	55	40
B1	#13	4	STRAIGHT	2020	~	~	~	~	~

UNITS SHOWN IN BRACKETS [] ARE METRIC AND ARE IN MILLIMETERS (mm) UNLESS OTHER UNITS ARE SHOWN.

DETAILED DRAWING

REFERENCE STANDARD SPEC. SECTION 606

DWG. NO. 606-26

TAPERED CONCRETE CURB DETAIL

EFFECTIVE: SEPTEMBER 2014

MDT MONTANA DEPARTMENT OF TRANSPORTATION

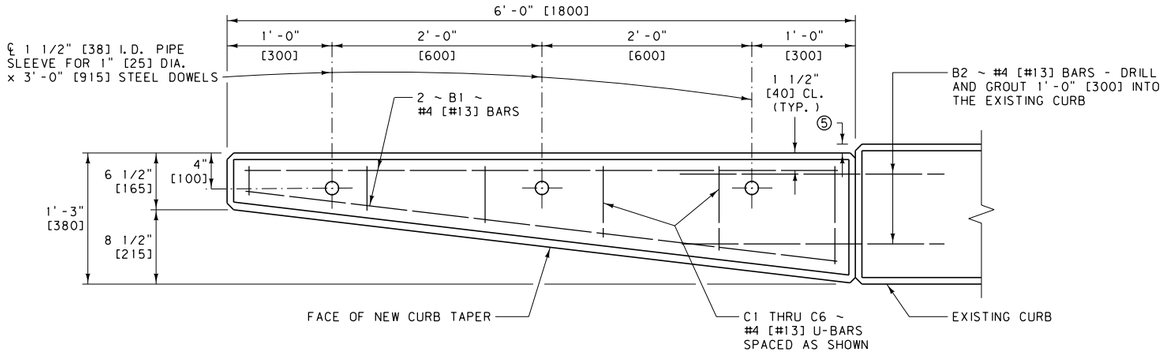

PLAN

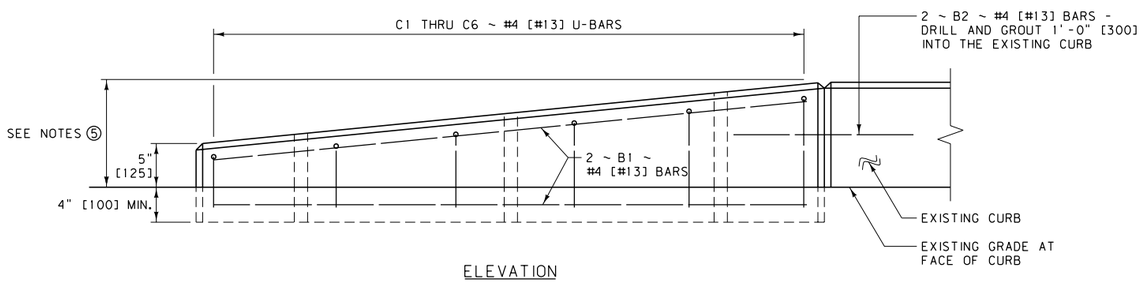

ELEVATION

NOTES:

① REMOVE THE EXISTING SURFACE UNDER THE NEW TAPERED CONCRETE CURB AS APPROVED BY THE PROJECT MANAGER. EMBED THE TAPERED CONCRETE CURB A MINIMUM OF 4" [100] BELOW THE GRADE MEASURED AT THE INSIDE FACE OF THE TAPER.

② FURNISH GRADE 60 [420] REINFORCING STEEL MEETING SECTION 711.

③ ALL CONCRETE IS CLASS "DD".
TOTAL CONCRETE PER 6' [1800] TAPERED CURB EST. = 0.2 C.Y. [0.16 m³]
TOTAL REBAR WEIGHT PER 6' [1800] TAPERED CURB EST. = 27 LB. [11.7 kg]

④ TAPERED CONCRETE CURB IS USED WITH BRIDGE APPROACH SECTION TYPE 3 (SEE DTL. DWG. NO. 606-24A AND 606-24B).

⑤ ADJUST DIMENSION TO MATCH EXISTING CURB.

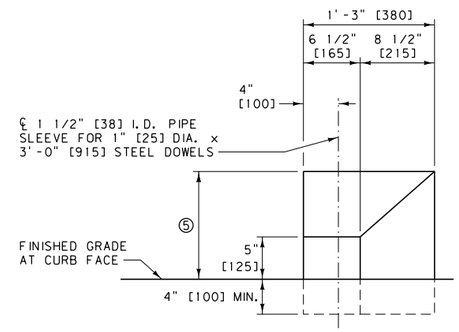

END VIEW

BILL OF REINFORCING STEEL (ONE SECTION ONLY)

TYPE 1

BENT BARS (ALL DIMENSIONS ARE OUT TO OUT)

MARK	SIZE	NO.	TYPE	LENGTH	A	B
C1	#4	1	1	1'-4"	6"	4"
C2	↑	↑	↑	1'-8"	7"	6"
C3				1'-11"	8"	7"
C4				2'-3"	9"	9"
C5		↓	↓	2'-6"	10"	10"
C6	↓	1	1	2'-10"	11"	1'-0"
B1		4	STRAIGHT	5'-8"	~	~
B2	#4	2	STRAIGHT	2'-0"	~	~

METRIC BILL OF REINFORCING STEEL (ONE SECTION ONLY)

TYPE 1

BENT BARS (ALL DIMENSIONS ARE OUT TO OUT)

MARK	SIZE	NO.	TYPE	LENGTH (mm)	A (mm)	B (mm)
C1	#13	1	1	390	150	90
C2	↑	↑	↑	480	175	130
C3				570	200	170
C4				665	225	215
C5		↓	↓	755	250	255
C6	↓	1	1	845	270	295
B1		4	STRAIGHT	1720	~	~
B2	#13	2	STRAIGHT	600	~	~

UNITS SHOWN IN BRACKETS [] ARE METRIC AND ARE IN MILLIMETERS (mm) UNLESS OTHER UNITS ARE SHOWN.

DETAILED DRAWING

REFERENCE STANDARD SPEC. SECTION 606

DWG. NO. 606-27

TAPERED CONCRETE CURB DETAIL

EFFECTIVE: SEPTEMBER 2014

MDT MONTANA DEPARTMENT OF TRANSPORTATION

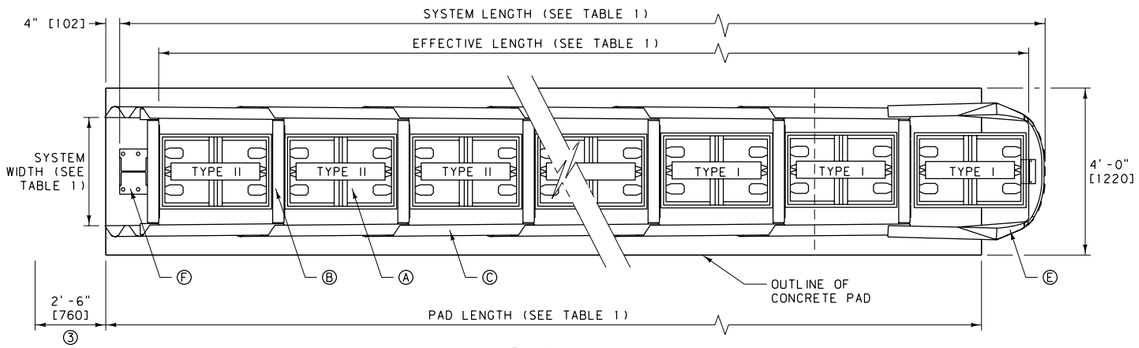

PLAN

Ⓐ QUADGUARD CARTRIDGE
Ⓑ DIAPHRAGM
Ⓒ FENDER PANEL
Ⓓ MONORAIL
Ⓔ NOSE ASSEMBLY
Ⓕ BACK UP
NOT INCLUDED IN MODEL NUMBER, ORDER SEPARATELY

UNIDIRECTIONAL TRAFFIC ①

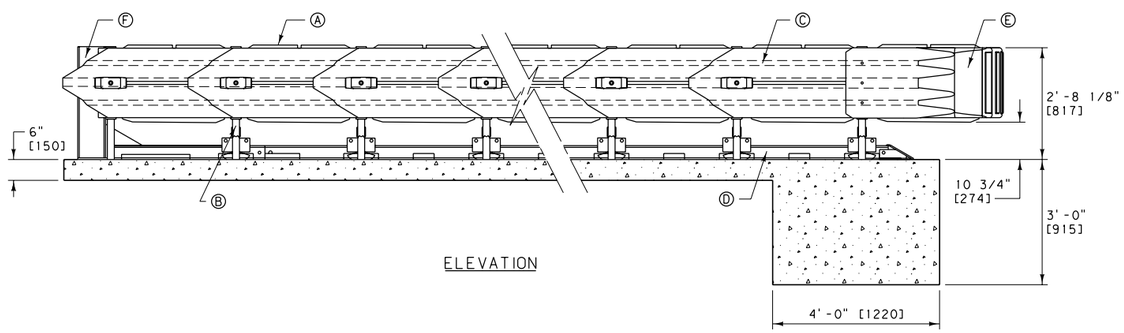

ELEVATION

TABLE 1:

BAYS	24" [610] WIDTH MODEL NO.	30" [760] WIDTH MODEL NO.	36" [915] WIDTH MODEL NO.	SYSTEM LENGTH	METRIC SYSTEM LENGTH (m)	EFFECTIVE LENGTH	METRIC EFFECTIVE LENGTH (m)	PAD LENGTH	METRIC PAD LENGTH (m)	MAX DESIGN SPEED (M.P.H.)	METRIC MAX DESIGN SPEED (km/hr)	NO. OF CARTRIDGES	
												TYPE I	TYPE II
1	OS2401*	OS3001*	OS3601*	7'-1"	2.16	5'-8"	1.73	9'-0"	2.74	25	40	2	0
2	OS2402*	OS3002*	OS3602*	10'-1"	3.08	8'-8"	2.64	9'-0"	2.74	37	60	2	1
3	OS2403*	OS3003*	OS3603*	13'-1"	4.00	11'-8"	3.56	12'-0"	3.66	44	70	3	1
4	OS2404*	OS3004*	OS3604*	16'-1"	4.91	14'-8"	4.47	15'-0"	4.57	50	80	3	2
5	OS2405*	OS3005*	OS3605*	19'-1"	5.83	17'-8"	5.38	18'-0"	5.49	56	90	4	2
6	OS2406*	OS3006*	OS3606*	22'-1"	6.74	20'-8"	6.30	21'-0"	6.40	62	100	4	3
7	OS2407*	OS3007*	OS3607*	25'-1"	7.65	23'-8"	7.21	24'-0"	7.32	65	105	4	4
8	OS2408*	OS3008*	OS3608*	28'-1"	8.57	26'-8"	8.13	27'-0"	8.23	68	110	4	5
9	OS2409*	OS3009*	OS3609*	31'-1"	9.49	29'-8"	9.04	30'-0"	9.14	71	115	4	6
10	OS2410*	OS3010*	OS3610*	34'-1"	10.40	32'-8"	9.96	33'-0"	10.06	75	120	5	6
11	OS2411*	OS3011*	OS3611*	37'-1"	11.32	35'-8"	10.87	36'-0"	10.97	75	120	5	7
12	OS2412*	OS3012*	OS3612*	40'-1"	12.23	38'-8"	11.79	39'-0"	11.89	75	120	5	8

* G = GREY OR Y = YELLOW

NOTES:

① ATTACHMENT SHOWN IS TO SHAPES WITH RECTANGULAR CROSS SECTIONS SUCH AS: PIERS, PARAPETS AND MODIFIED CONCRETE BARRIER RAIL. TRAFFIC FLOW IS UNIDIRECTIONAL. ATTACHMENTS AND TRANSITIONS TO OTHER SHAPES, BARRIERS, RAILINGS AND BIDIRECTIONAL TRAFFIC FLOWS ARE AVAILABLE FROM THE MANUFACTURER.

② THE SYSTEM SHOWN INCLUDES THE TENSION STRUT BACKUP ASSEMBLY AND THE CONCRETE PAD AS DETAILED. SEE THE MANUFACTURER FOR DRAWINGS DETAILING THE REINFORCING STEEL FOR THE CONCRETE PAD AND FOR OTHER BACKUP & CONCRETE PAD OPTIONS.

③ PROVIDE ADEQUATE CLEARANCE FOR THE DISTANCE SHOWN TO ALLOW FENDER PANELS TO SLIDE REARWARD UPON IMPACT.

④ SEE MANUFACTURER FOR MORE INFORMATION ON SPECIFIC DESIGNS, INSTALLATION AND MAINTENANCE OF THE QUADGUARD SYSTEM.

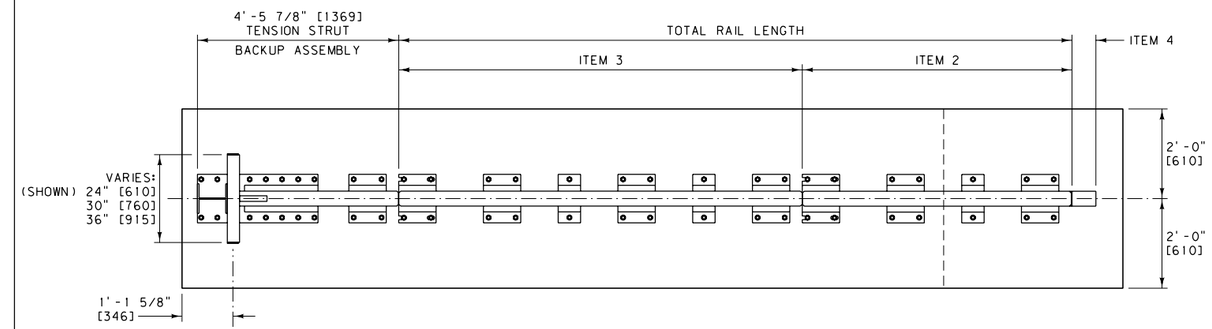

PLAN

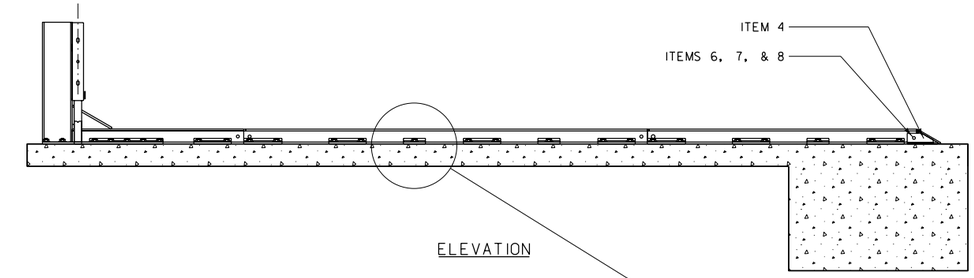

ELEVATION

MONORAIL ASSEMBLY
(TYPICAL 6 BAY ASSEMBLY)

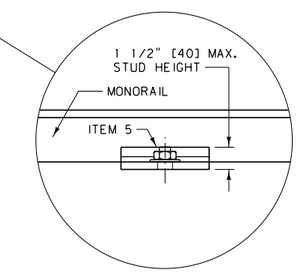

TABLE 2:

ITEM	STOCK NO.	DESCRIPTION	METRIC DESCRIPTION	REQ'D
1	2760051-0000	MONORAIL, ONE BAY	MONORAIL, ONE BAY	#
2	2760061-0000	MONORAIL, TWO BAYS	MONORAIL, TWO BAYS	#
3	2760071-0000	MONORAIL, THREE BAYS	MONORAIL, THREE BAYS	#
4	2760041-0000	MONORAIL END CAP	MONORAIL END CAP	1
5	3525300-0000	ANCHOR KIT	ANCHOR KIT	#
6	2699571-0000	5/8" DIA. x 3 1/2" HEX BOLT	M16 x 89 HEX BOLT	1
7	2704141-0000	5/8" DIA. HEX NUT	M16 HEX NUT	1
8	2708231-0000	5/8" DIA. LOCK WASHER	M16 LOCK WASHER	1

- SEE TABLE 3 BELOW

TABLE 3:

ASSEMBLY NO.	TOTAL RAIL LENGTH	METRIC TOTAL RAIL LENGTH (mm)	# ITEM 1	# ITEM 2	# ITEM 3	# ITEM 5	NO. OF BAYS
3540060-0100	0"	0	0	0	0	0	1
3540060-0200	36.0"	915	1	0	0	2	2
3540060-0300	72.0"	1 830	0	1	0	3	3
3540060-0400	108.1"	2 745	0	0	1	4	4
3540060-0500	144.1"	3 660	1	0	1	5	5
3540060-0600	180.1"	4 575	0	1	1	6	6
3540060-0700	216.1"	5 490	0	0	2	7	7
3540060-0800	252.1"	6 405	1	0	2	8	8
3540060-0900	288.2"	7 320	0	1	2	9	9
3540060-1000	324.2"	8 235	0	0	3	10	10
3540060-1100	360.2"	9 150	1	0	3	12	11
3540060-1200	396.2"	10 065	0	1	3	13	12

UNITS SHOWN IN BRACKETS [] ARE METRIC AND ARE IN MILLIMETERS (mm) UNLESS OTHER UNITS ARE SHOWN.

DETAILED DRAWING

REFERENCE STANDARD SPEC. SECTION 606

DWG. NO. 606-30A

IMPACT ATTENUATOR - QUADGUARD

EFFECTIVE: SEPTEMBER 2014

MDT MONTANA DEPARTMENT OF TRANSPORTATION

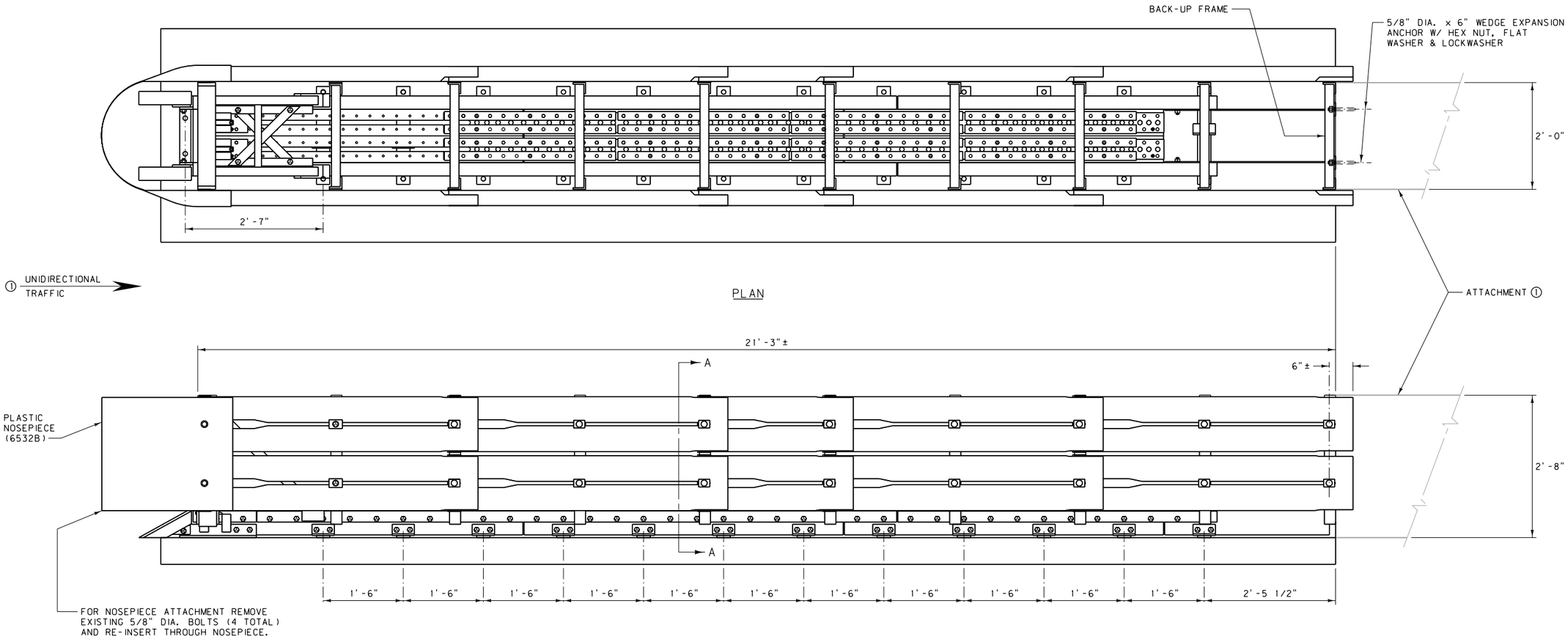

ELEVATION

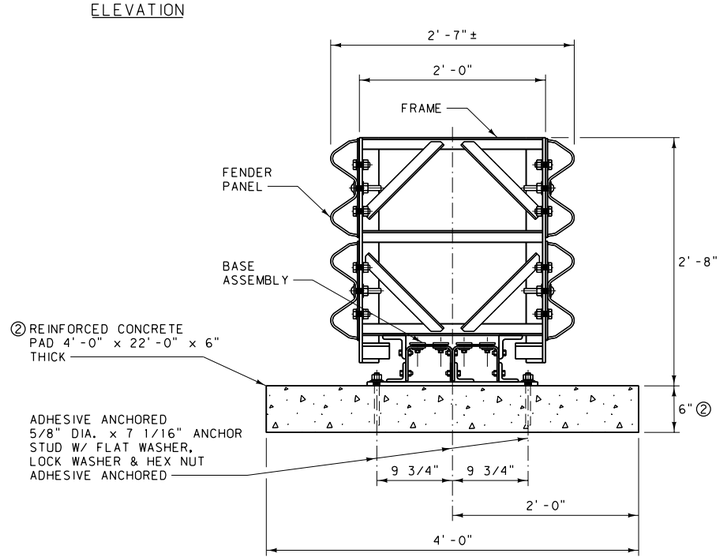

SECTION A-A

TRACC BILL OF MATERIAL		
PART NUMBER	QTY	DESCRIPTION
* 25980A	1	TRACC UNIT (FULLY ASSEMBLED **)
3310G	4	5/8" DIA. LOCKWASHER
4451G	4	5/8" DIA. x 6" WEDGE EXP. ANCHOR
6825B	4	REFLECTIVE TAPE
6532B	1	PLASTIC NOSEPIECE
ANCHOR HARDWARE (FULL CONCRETE BASE)		
5204G	26	5/8" DIA. x 7 1/16" ANCHOR STUD
3310G	26	5/8" DIA. LOCKWASHER
3361G	26	5/8" DIA. HEX NUT
3300G	26	5/8" DIA. FLAT WASHER
5206B	3	ADHESIVE HIT HY 150(CARTRIDGE)
ANCHOR HARDWARE (ASPHALT BASE)		
6380G	26	5/8" DIA. x 18" ALL THREADED ROD
3310G	26	5/8" DIA. LOCKWASHER
3361G	26	5/8" DIA. HEX NUT
3300G	26	5/8" DIA. FLAT WASHER
5206B	5	ADHESIVE HIT HY 150(CARTRIDGE)

* SEE DET. DWG. NO. 606-31B
** EACH UNIT SHIPS 100% ASSEMBLED (PLASTIC NOSE INSTALLED AFTER PLACEMENT)

NOTES:

① ATTACHMENT SHOWN IS TO SHAPES WITH RECTANGULAR CROSS SECTIONS SUCH AS: PIERS, PARAPETS, AND MODIFIED CONCRETE BARRIER RAIL. TRAFFIC FLOW IS UNIDIRECTIONAL. ATTACHMENTS AND TRANSITIONS TO OTHER SHAPES, BARRIERS, RAILINGS AND BIDIRECTIONAL TRAFFIC FLOWS ARE AVAILABLE FROM THE MANUFACTURER.

② A 6" REINFORCED CONCRETE PAD IS SHOWN. OTHER FOUNDATION OPTIONS ARE:

a) 8" THICK UNREINFORCED CONCRETE
b) 8" THICK ASPHALT
c) 3" THICK ASPHALT OVER 3" THICK CONCRETE
d) 6" THICK ASPHALT OVER 6" THICK COMPACTED SUBBASE

REINFORCEMENT DRAWINGS FOR THE REINFORCED CONCRETE PAD SHOWN ARE AVAILABLE FROM THE MANUFACTURER.

③ SEE MANUFACTURER FOR MORE INFORMATION ON SPECIFIC DESIGNS, PRODUCT OPTIONS, INSTALLATION AND MAINTENANCE OF THE TRACC SYSTEM.

DETAILED DRAWING

REFERENCE STANDARD SPEC. SECTION 606

DWG. NO. 606-30B

IMPACT ATTENUATOR - TRACC

EFFECTIVE: SEPTEMBER 2014

MDT MONTANA DEPARTMENT OF TRANSPORTATION

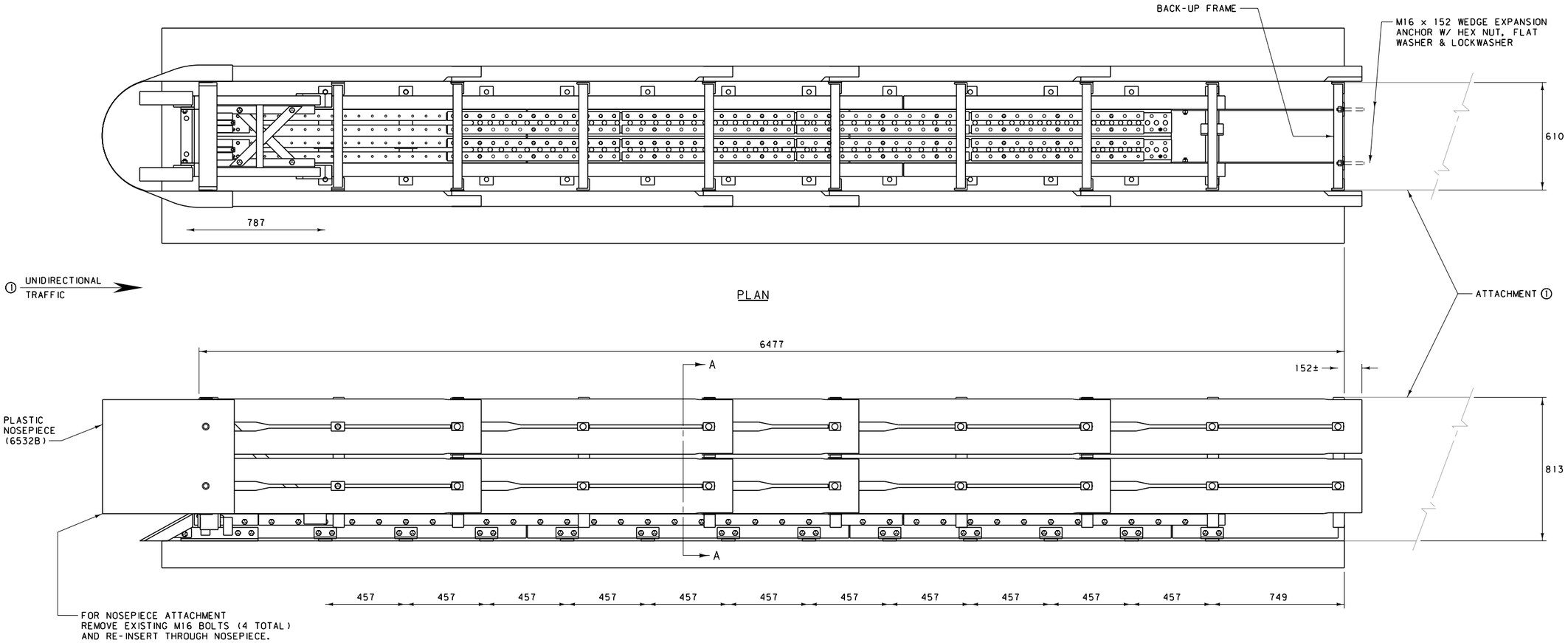

ELEVATION

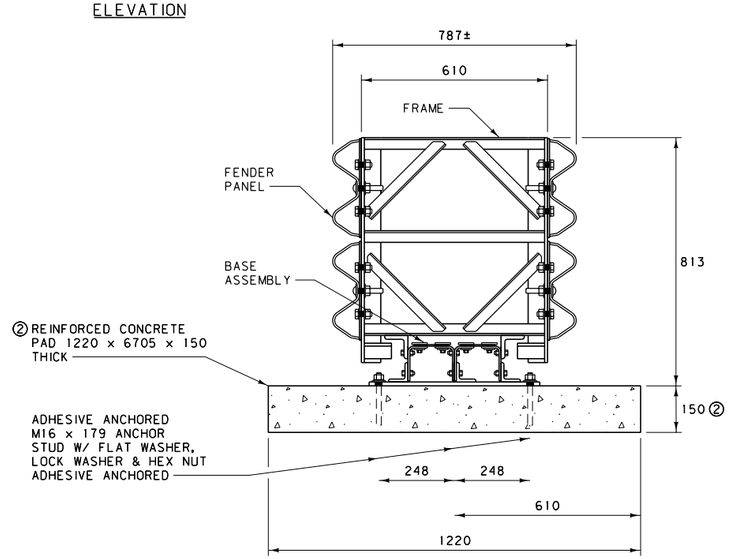

SECTION A-A

TRACC BILL OF MATERIAL		
PART NUMBER	QTY	DESCRIPTION
* 25980A	1	TRACC UNIT (FULLY ASSEMBLED **)
3310G	4	M16 LOCKWASHER
4451G	4	M16 x 152 WEDGE EXP. ANCHOR
6825B	4	REFLECTIVE TAPE
6532B	1	PLASTIC NOSEPIECE
ANCHOR HARDWARE (FULL CONCRETE BASE)		
5204G	26	M16 x 179 ANCHOR STUD
3310G	26	M16 LOCKWASHER
3361G	26	M16 HEX NUT
3300G	26	M16 FLAT WASHER
5206B	3	ADHESIVE HIT HY 150(CARTRIDGE)
ANCHOR HARDWARE (ASPHALT BASE)		
6380G	26	M16 x 457 ALL THREADED ROD
3310G	26	M16 LOCKWASHER
3361G	26	M16 HEX NUT
3300G	26	M16 FLAT WASHER
5206B	5	ADHESIVE HIT HY 150(CARTRIDGE)

* SEE DET. DWG. NO. 606-31B
** EACH UNIT SHIPS 100% ASSEMBLED (PLASTIC NOSE INSTALLED AFTER PLACEMENT)

NOTES:

① ATTACHMENT SHOWN IS TO SHAPES WITH RECTANGULAR CROSS SECTIONS SUCH AS: PIERS, PARAPETS, AND MODIFIED CONCRETE BARRIER RAIL. TRAFFIC FLOW IS UNIDIRECTIONAL. ATTACHMENTS AND TRANSITIONS TO OTHER SHAPES, BARRIERS, RAILINGS AND BIDIRECTIONAL TRAFFIC FLOWS ARE AVAILABLE FROM THE MANUFACTURER.

② A 150 mm REINFORCED CONCRETE PAD IS SHOWN. OTHER FOUNDATION OPTIONS ARE:

a) 200 mm THICK UNREINFORCED CONCRETE
b) 200 mm THICK ASPHALT
c) 75 mm THICK ASPHALT OVER 75 mm THICK CONCRETE
d) 150 mm THICK ASPHALT OVER 150 mm THICK COMPACTED SUBBASE

REINFORCEMENT DRAWINGS FOR THE REINFORCED CONCRETE PAD SHOWN ARE AVAILABLE FROM THE MANUFACTURER.

③ SEE MANUFACTURER FOR MORE INFORMATION ON SPECIFIC DESIGNS, PRODUCT OPTIONS, INSTALLATION AND MAINTENANCE OF THE TRACC SYSTEM.

ALL DIMENSIONS ARE MILLIMETERS (mm) UNLESS OTHERWISE NOTED.

DETAILED DRAWING

REFERENCE STANDARD SPEC. SECTION 606

DWG. NO. 606-30B

IMPACT ATTENUATOR - TRACC (METRIC)

EFFECTIVE: SEPTEMBER 2014

MDT MONTANA DEPARTMENT OF TRANSPORTATION

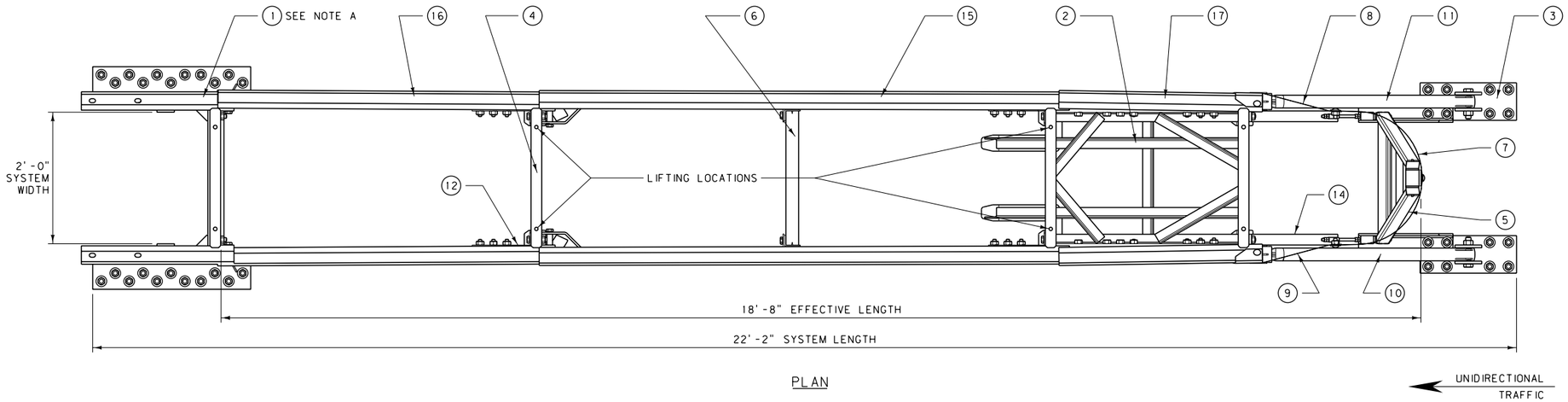

PLAN

NOTES:

Ⓐ ATTACHMENT SHOWN IS TO SHAPES WITH RECTANGULAR CROSS SECTIONS SUCH AS: PIERS, PARAPETS, AND MODIFIED CONCRETE BARRIER RAIL. TRAFFIC FLOW IS UNIDIRECTIONAL. ATTACHMENTS AND TRANSITIONS TO OTHER SHAPES, BARRIERS, RAILINGS AND BIDIRECTIONAL TRAFFIC FLOWS ARE AVAILABLE FROM THE MANUFACTURER.

Ⓑ PROVIDE ADEQUATE CLEARANCE (5'-0" MIN.) TO ALLOW REAR RAILS TO SLIDE REARWARD UPON IMPACT.

Ⓒ A 6" REINFORCED CONCRETE PAD IS SHOWN. OTHER FOUNDATION OPTIONS ARE:

a) 8" THICK UNREINFORCED CONCRETE
b) 8" THICK ASPHALT
c) 3" THICK ASPHALT OVER 3" THICK CONCRETE
d) 6" THICK ASPHALT OVER 6" THICK COMPACTED SUBBASE
e) 7" THICK REINFORCED DECK STRUCTURE

SEE MANUFACTURER FOR REINFORCEMENT DRAWINGS AND ANCHORAGE REQUIREMENTS FOR ALL FOUNDATION OPTIONS.

Ⓓ SEE MANUFACTURER FOR MORE INFORMATION ON SPECIFIC DESIGNS, INSTALLATION AND MAINTENANCE OF THE QUEST SYSTEM.

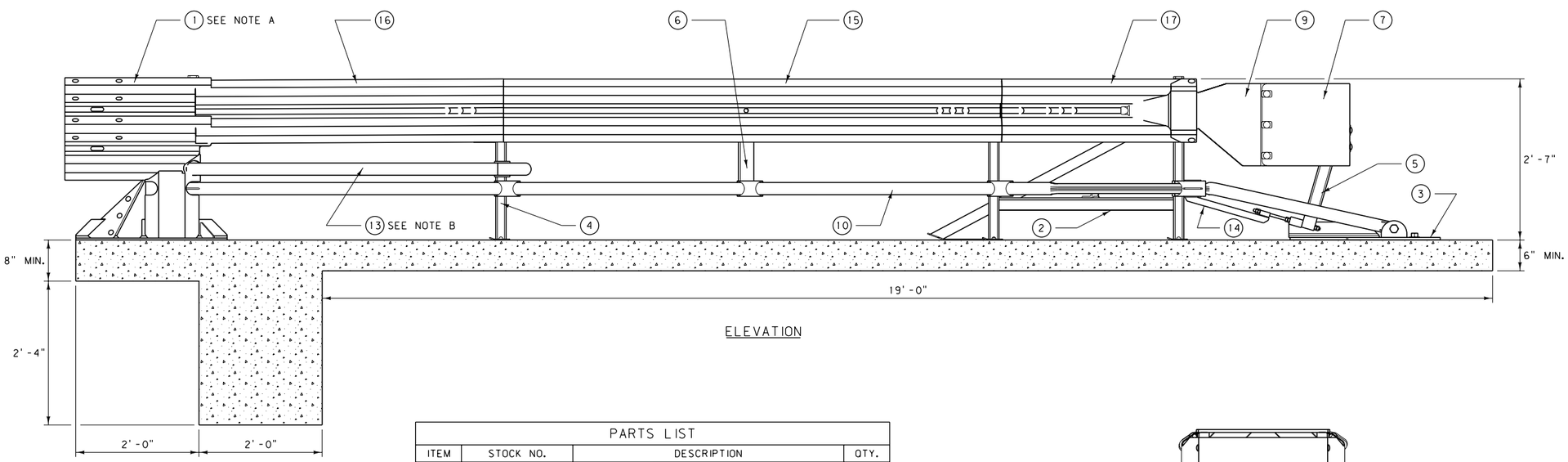

ELEVATION

PARTS LIST			
ITEM	STOCK NO.	DESCRIPTION	QTY.
1	3562003-0000	24" BACKUP ASSEMBLY	1
2	3562002-0000	BAY 1 24" SUPPORT FRAME ASSEMBLY	1
3	2762015-0000	FRONT ANCHOR	2
4	3562005-0000	BAY 3 24" DIAPHRAGM ASSEMBLY	1
5	3562001-0000	TRIGGER ASSEMBLY	1
6	3562004-0000	BAY 2 24" BRIDGE	1
7	2762026-0000	NOSE	1
8	2762024-0000	RT. NOSE TRANSITION	1
9	2762025-0000	LT. NOSE TRANSITION	1
10	276200L-0000	LT. SHAPER RAIL	1
11	276200R-0000	RT. SHAPER RAIL	1
12	2762022-0000	DIAPHRAGM PANEL BRACKET	2
13	2762023-0000	REAR RAIL	2
14	2762007-0000	TRIGGER STRAP	2
15	2762013-0000	BAY 2 PANEL	2
16	2762014-0000	BAY 3 PANEL	2
17	2762033-0000	BAY 1 PANEL	2

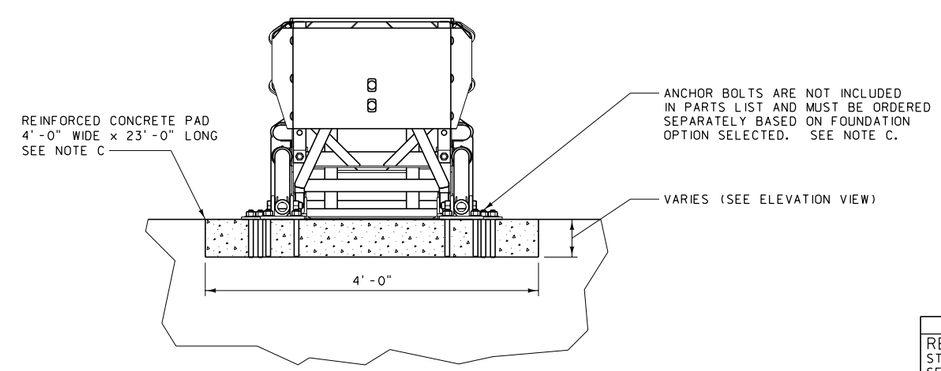

DETAILED DRAWING

REFERENCE STANDARD SPEC. SECTION 606

DWG. NO. 606-30C

IMPACT ATTENUATOR - QUEST

EFFECTIVE: SEPTEMBER 2014

MDT MONTANA DEPARTMENT OF TRANSPORTATION

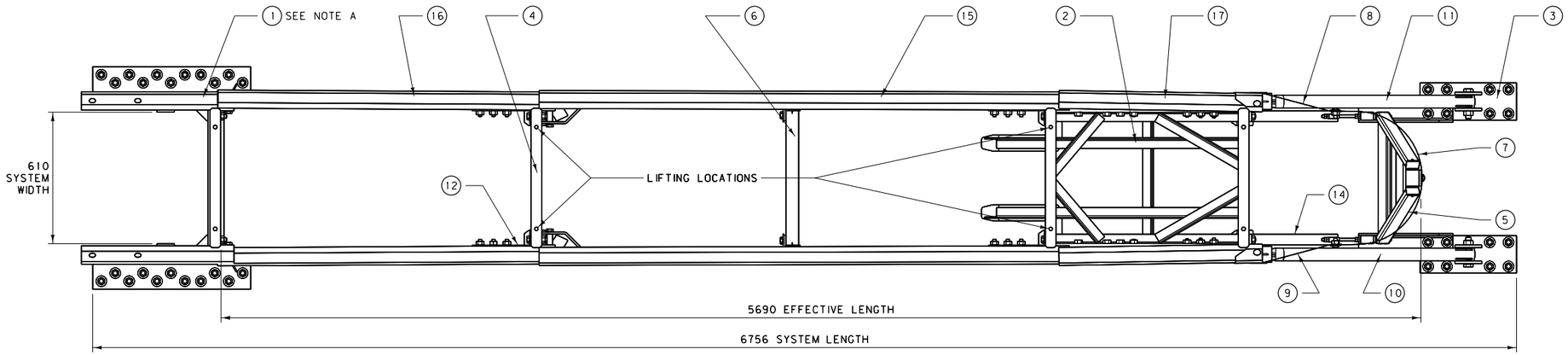

PLAN

UNIDIRECTIONAL TRAFFIC

NOTES:

Ⓐ ATTACHMENT SHOWN IS TO SHAPES WITH RECTANGULAR CROSS SECTIONS SUCH AS: PIERS, PARAPETS, AND MODIFIED CONCRETE BARRIER RAIL. TRAFFIC FLOW IS UNIDIRECTIONAL. ATTACHMENTS AND TRANSITIONS TO OTHER SHAPES, BARRIERS, RAILINGS AND BIDIRECTIONAL TRAFFIC FLOWS ARE AVAILABLE FROM THE MANUFACTURER.

Ⓑ PROVIDE ADEQUATE CLEARANCE (1.5 m MIN.) TO ALLOW REAR RAILS TO SLIDE REARWARD UPON IMPACT.

Ⓒ A 150 mm REINFORCED CONCRETE PAD IS SHOWN. OTHER FOUNDATION OPTIONS ARE:

a) 200 mm THICK UNREINFORCED CONCRETE
b) 200 mm THICK ASPHALT
c) 75 mm THICK ASPHALT OVER 75 mm THICK CONCRETE
d) 150 mm THICK ASPHALT OVER 150 mm THICK COMPACTED SUBBASE
e) 180 mm THICK REINFORCED DECK STRUCTURE

SEE MANUFACTURER FOR REINFORCEMENT DRAWINGS AND ANCHORAGE REQUIREMENTS FOR ALL FOUNDATION OPTIONS.

Ⓓ SEE MANUFACTURER FOR MORE INFORMATION ON SPECIFIC DESIGNS, INSTALLATION AND MAINTENANCE OF THE QUEST SYSTEM.

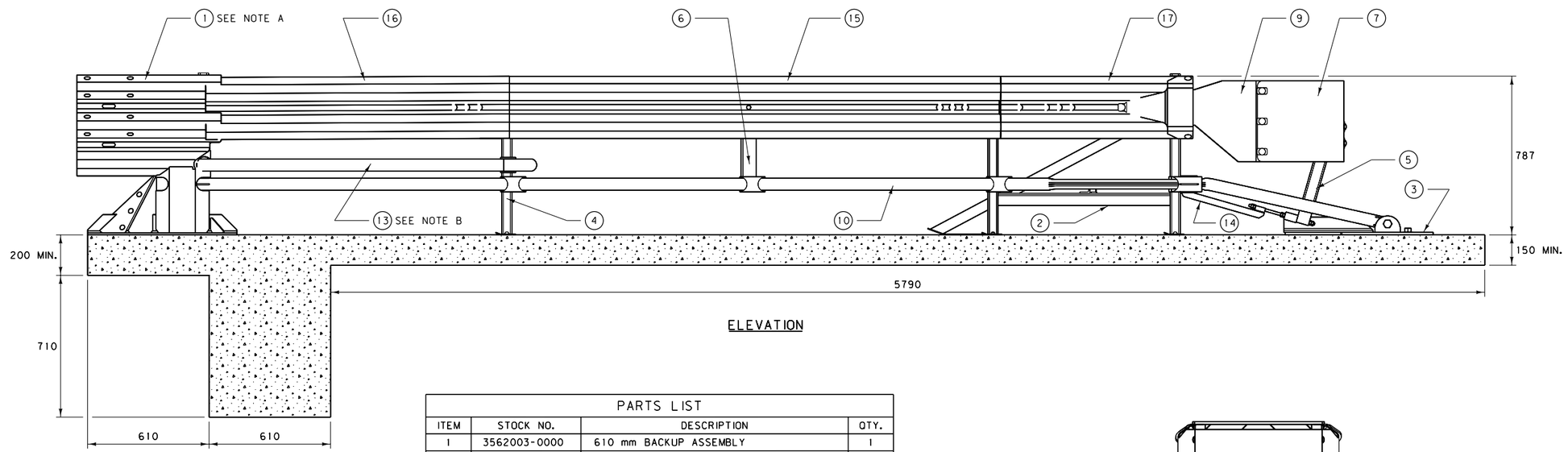

ELEVATION

PARTS LIST			
ITEM	STOCK NO.	DESCRIPTION	QTY.
1	3562003-0000	610 mm BACKUP ASSEMBLY	1
2	3562002-0000	BAY 1 610 mm SUPPORT FRAME ASSEMBLY	1
3	2762015-0000	FRONT ANCHOR	2
4	3562005-0000	BAY 3 610 mm DIAPHRAGM ASSEMBLY	1
5	3562001-0000	TRIGGER ASSEMBLY	1
6	3562004-0000	BAY 2 610 mm BRIDGE	1
7	2762026-0000	NOSE	1
8	2762024-0000	RT. NOSE TRANSITION	1
9	2762025-0000	LT. NOSE TRANSITION	1
10	276200L-0000	LT. SHAPER RAIL	1
11	276200R-0000	RT. SHAPER RAIL	1
12	2762022-0000	DIAPHRAGM PANEL BRACKET	2
13	2762023-0000	REAR RAIL	2
14	2762007-0000	TRIGGER STRAP	2
15	2762013-0000	BAY 2 PANEL	2
16	2762014-0000	BAY 3 PANEL	2
17	2762033-0000	BAY 1 PANEL	2

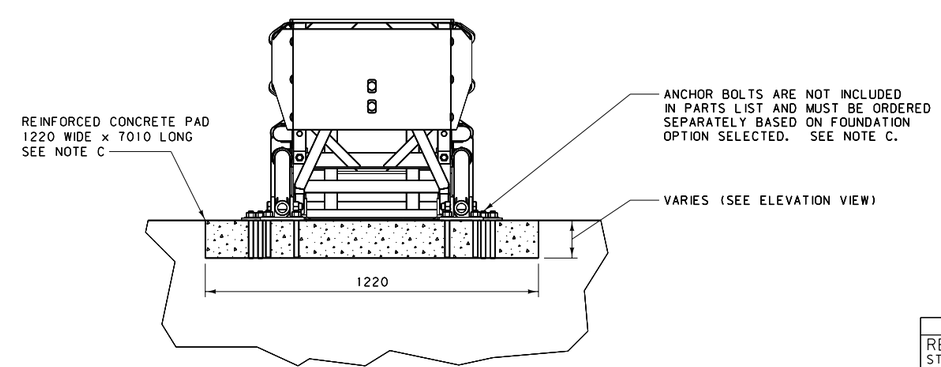

ALL DIMENSIONS ARE MILLIMETERS (mm) UNLESS OTHERWISE NOTED.

DETAILED DRAWING

REFERENCE STANDARD SPEC. SECTION **606**

DWG. NO. 606-30C

IMPACT ATTENUATOR - QUEST (METRIC)

EFFECTIVE: SEPTEMBER 2014

MDT MONTANA DEPARTMENT OF TRANSPORTATION

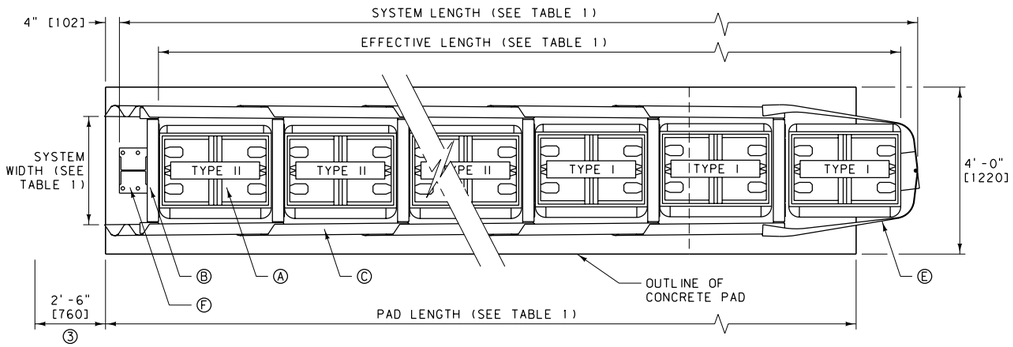

PLAN

Ⓐ QUADGUARD CARTRIDGE
Ⓑ DIAPHRAGM
Ⓒ FENDER PANEL

Ⓓ MONORAIL
Ⓔ NOSE ASSEMBLY
Ⓕ BACK UP

NOT INCLUDED IN MODEL NUMBER, ORDER SEPARATELY

UNIDIRECTIONAL TRAFFIC ①

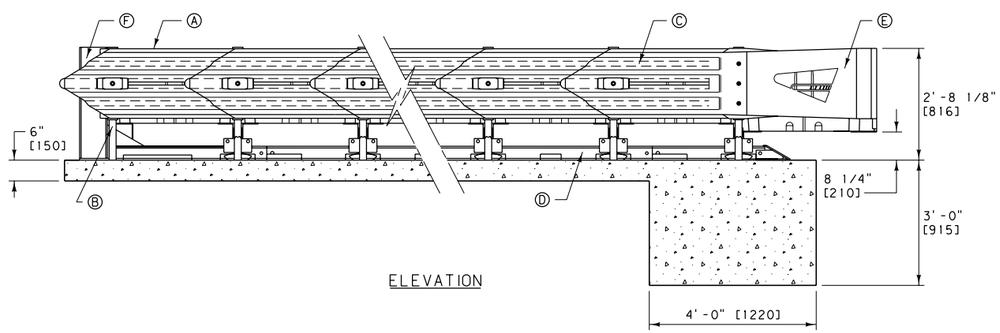

ELEVATION

TABLE 1:

BAYS	24" [610] WIDTH MODEL NO.	30" [760] WIDTH MODEL NO.	36" [915] WIDTH MODEL NO.	SYSTEM LENGTH	METRIC SYSTEM LENGTH (m)	EFFECTIVE LENGTH	METRIC EFFECTIVE LENGTH (m)	PAD LENGTH	METRIC PAD LENGTH (m)	MAX DESIGN SPEED (M.P.H.)	METRIC MAX DESIGN SPEED (km/hr)	NO. OF CARTRIDGES	
												TYPE I	TYPE II
1	QG24024	QG24030	QG24036	7'-0"	2.13	5'-8"	1.73	9'-0"	2.74	25	40	2	0
2	QG27024	QG27030	QG27036	10'-0"	3.05	8'-8"	2.64	9'-0"	2.74	43	70	2	1
3	QG28024	QG28030	QG28036	13'-0"	3.96	11'-8"	3.56	12'-0"	3.66	50	80	2	2
4	QG29024	QG29030	QG29036	16'-0"	4.87	14'-8"	4.47	15'-0"	4.57	56	90	3	2
5	QG210024	QG210030	QG210036	19'-0"	5.79	17'-8"	5.38	18'-0"	5.49	62	100	3	3
6	QG210524	QG210530	QG210536	22'-0"	6.71	20'-8"	6.30	21'-0"	6.40	65	105	4	3
7	QG212024	QG211030	QG211036	25'-0"	7.63	23'-8"	7.21	24'-0"	7.32	68	110	4	4
8	QG211524	QG211530	QG211536	28'-0"	8.53	26'-8"	8.13	27'-0"	8.23	71	115	4	5
9	QG212024	QG212030	QG212036	31'-0"	9.45	29'-8"	9.04	30'-0"	9.14	75	120	4	6

NOTES:

① ATTACHMENT SHOWN IS TO SHAPES WITH RECTANGULAR CROSS SECTIONS SUCH AS: PIERS, PARAPETS AND MODIFIED CONCRETE BARRIER RAIL. TRAFFIC FLOW IS UNIDIRECTIONAL. ATTACHMENTS AND TRANSITIONS TO OTHER SHAPES, BARRIERS, RAILINGS AND BIDIRECTIONAL TRAFFIC FLOWS ARE AVAILABLE FROM THE MANUFACTURER.

② THE SYSTEM SHOWN INCLUDES THE TENSION STRUT BACKUP ASSEMBLY AND THE CONCRETE PAD AS DETAILED. SEE THE MANUFACTURER FOR DRAWINGS DETAILING THE REINFORCING STEEL FOR THE CONCRETE PAD AND FOR OTHER BACKUP & CONCRETE PAD OPTIONS.

③ PROVIDE ADEQUATE CLEARANCE FOR THE DISTANCE SHOWN TO ALLOW FENDER PANELS TO SLIDE REARWARD UPON IMPACT.

④ SEE MANUFACTURER FOR MORE INFORMATION ON SPECIFIC DESIGNS, INSTALLATION AND MAINTENANCE OF THE QUADGUARD II SYSTEM.

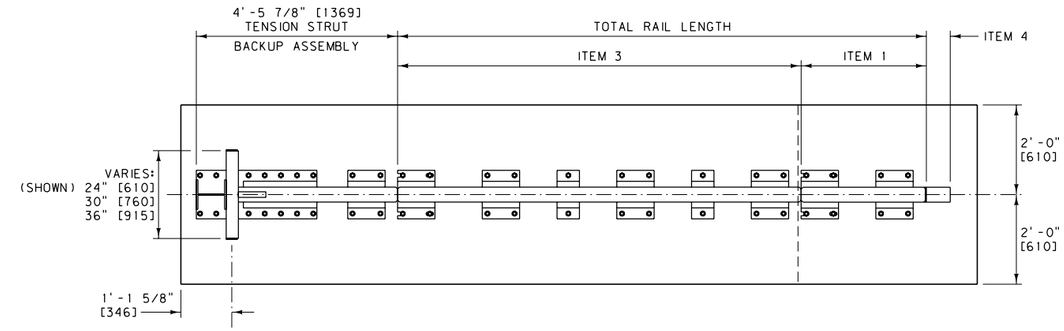

PLAN

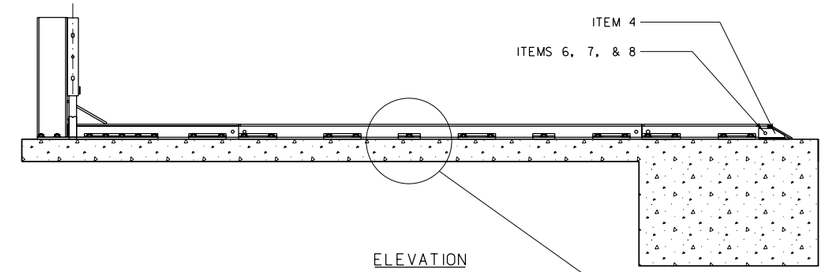

ELEVATION

MONORAIL ASSEMBLY
(TYPICAL 5 BAY ASSEMBLY)

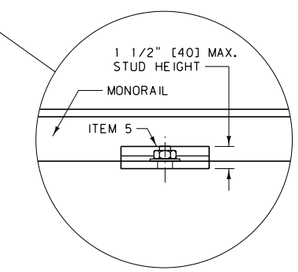

TABLE 2:

ITEM	STOCK NO.	DESCRIPTION	METRIC DESCRIPTION	REQ'D
1	2760051-0000	MONORAIL, ONE BAY	MONORAIL, ONE BAY	#
2	2760061-0000	MONORAIL, TWO BAYS	MONORAIL, TWO BAYS	#
3	2760071-0000	MONORAIL, THREE BAYS	MONORAIL, THREE BAYS	#
4	2760041-0000	MONORAIL END CAP	MONORAIL END CAP	1
5	3525300-0000	ANCHOR KIT	ANCHOR KIT	#
6	2699571-0000	5/8" DIA. x 3 1/2" HEX BOLT	M16 x 89 HEX BOLT	1
7	2704141-0000	5/8" DIA. HEX NUT	M16 HEX NUT	1
8	2708231-0000	5/8" DIA. LOCK WASHER	M16 LOCK WASHER	1

- SEE TABLE 3 BELOW

TABLE 3:

ASSEMBLY NO.	TOTAL RAIL LENGTH	METRIC TOTAL RAIL LENGTH (mm)	# ITEM 1	# ITEM 2	# ITEM 3	# ITEM 5	NO. OF BAYS
3540060-0100	0"	0	0	0	0	0	1
3540060-0200	36.0"	915	1	0	0	2	2
3540060-0300	72.0"	1 830	0	1	0	3	3
3540060-0400	108.1"	2 745	0	0	1	4	4
3540060-0500	144.1"	3 660	1	0	1	5	5
3540060-0600	180.1"	4 575	0	1	1	6	6
3540060-0700	216.1"	5 490	0	0	2	7	7
3540060-0800	252.1"	6 405	1	0	2	8	8
3540060-0900	288.2"	7 320	0	1	2	9	9

UNITS SHOWN IN BRACKETS [] ARE METRIC AND ARE IN MILLIMETERS (mm) UNLESS OTHER UNITS ARE SHOWN.

DETAILED DRAWING

REFERENCE STANDARD SPEC. SECTION 606

DWG. NO. 606-30D

IMPACT ATTENUATOR - QUADGUARD II

EFFECTIVE: SEPTEMBER 2014

MDT MONTANA DEPARTMENT OF TRANSPORTATION

ITEM	STOCK NO.	DESCRIPTION	METRIC DESCRIPTION	REQ'D
1	SEE TABLE A	DIAPHRAGM	DIAPHRAGM	1
8	2760091-0000	MONORAIL GUIDE	MONORAIL GUIDE	2
9	2704341-0000	3/4" DIA. HEX NUT	M20 HEX NUT	4
10	2699121-0000	3/4" DIA. x 2" HEX BOLT	M20 x 51 HEX BOLT	4
11	2708201-0000	3/4" DIA. LOCK WASHER	M20 LOCK WASHER	4
12	2760292-0000	CARTRIDGE SUPPORT BRACKET	CARTRIDGE SUPPORT BRACKET	2

TABLE A:

ASSEMBLY NO.	STOCK NO.	DESCRIPTION	METRIC DESCRIPTION
3540071-0000	2761011-0000	24" WIDE DIAPHRAGM	610 WIDE DIAPHRAGM
3540072-0000	2761021-0000	30" WIDE DIAPHRAGM	760 WIDE DIAPHRAGM
3540073-0000	2761031-0000	36" WIDE DIAPHRAGM	915 WIDE DIAPHRAGM

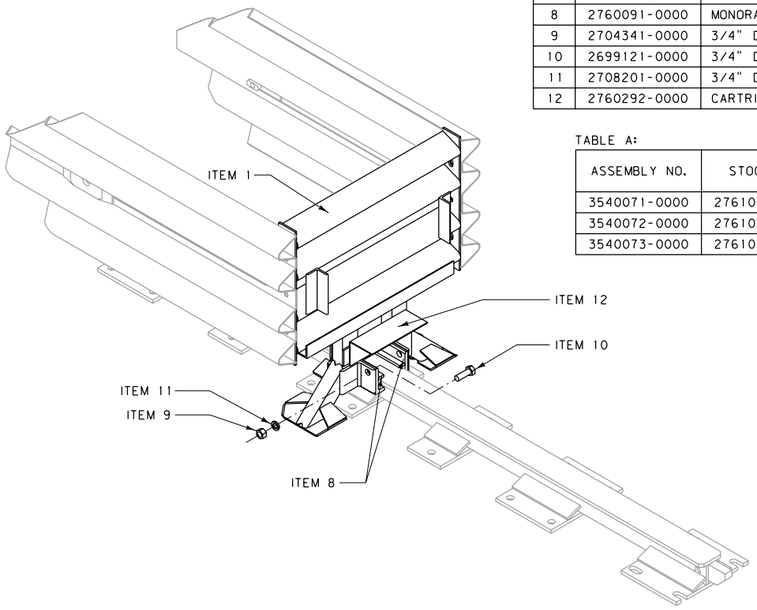

DIAPHRAGM ASSEMBLY

ITEM	STOCK NO.	DESCRIPTION	METRIC DESCRIPTION	REQ'D
1	3540130-0*00	NOSE, W/ SUPPORT BRACKET	NOSE, W/ SUPPORT BRACKET	1
2	2699341-0000	5/8" DIA. x 2" RAIL BOLT	M16 x 51 RAIL BOLT	6
3	2704191-0000	5/8" DIA. HEX NUT	M16 HEX NUT	6
4	2708871-0000	WASHER (BAR 1/8" x 1 1/4" x 2", W/ 5/8" DIA. HOLE)	WASHER (BAR 3.2 x 32 x 51, W/ M16 HOLE)	6
5	2760251-0000	PULL-OUT BRACKET	PULL-OUT BRACKET	2

* 0 INDICATES GRAY
* 1 INDICATES YELLOW

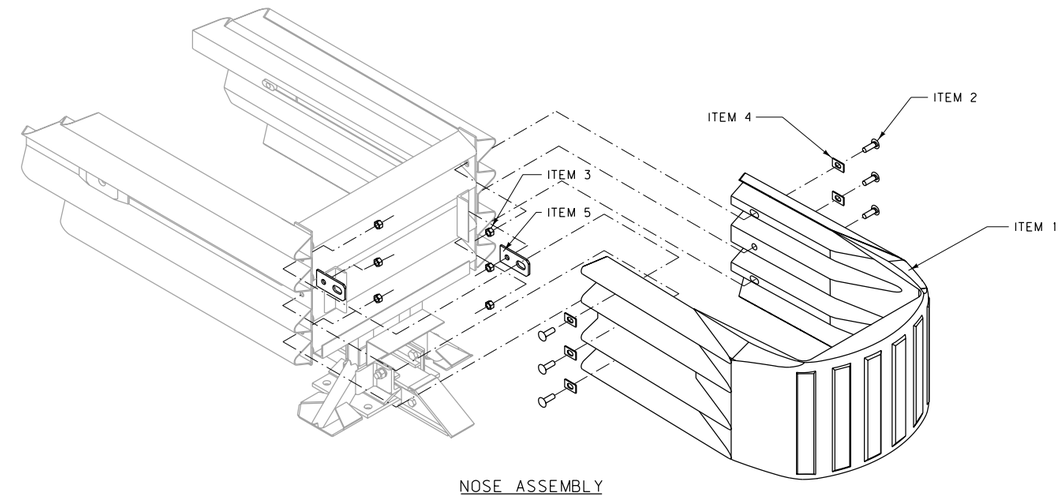

NOSE ASSEMBLY

ASSEMBLY NO. 3540050-0100 (YELLOW)
ASSEMBLY NO. 3540050-0000 (GRAY)

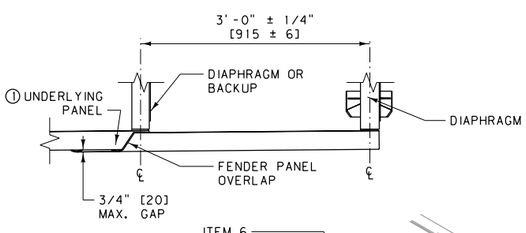

ITEM	STOCK NO.	DESCRIPTION	METRIC DESCRIPTION	REQ'D
1	2760081-0000	FENDER PANEL	FENDER PANEL	1
2	2699341-0000	5/8" DIA. x 2" RAIL BOLT	M16 x 51 RAIL BOLT	2
3	2704191-0000	5/8" DIA. HEX NUT	M16 HEX NUT	2
4	2708841-0000	CAST MUSHROOM WASHER	CAST MUSHROOM WASHER	1
5	2706604-0000	5/8" DIA.x 5" SCREW	M16 x 127 SCREW	1
6	2704141-0000	5/8" DIA. HEX NUT	M16 HEX NUT	1
*7	2708291-0000	5/8" DIA. WASHER	M16 WASHER	2
*8	2021611-0000	ELASTOMERIC BUSHING	ELASTOMERIC BUSHING	1
#7	2708291-0000	5/8" DIA. WASHER	M16 WASHER	1
#8	2021611-0000	5/8" x 1 1/4" O.D. x 1 1/2" DIE SPRING	M16 x 32 O.D. x 38 DIE SPRING	1

* OLDER OPTION
# NEWER OPTION

NOTE:

① UNDERLYING PANEL IS EITHER ANOTHER FENDER PANEL OR, IN THE CASE OF THE LAST FENDER PANEL IT COULD BE A BACKUP SIDE PANEL, EXTENSION PANEL OR TRANSITION PANEL.

② TWO FENDER PANEL ASSEMBLIES ARE REQUIRED PER BAY.

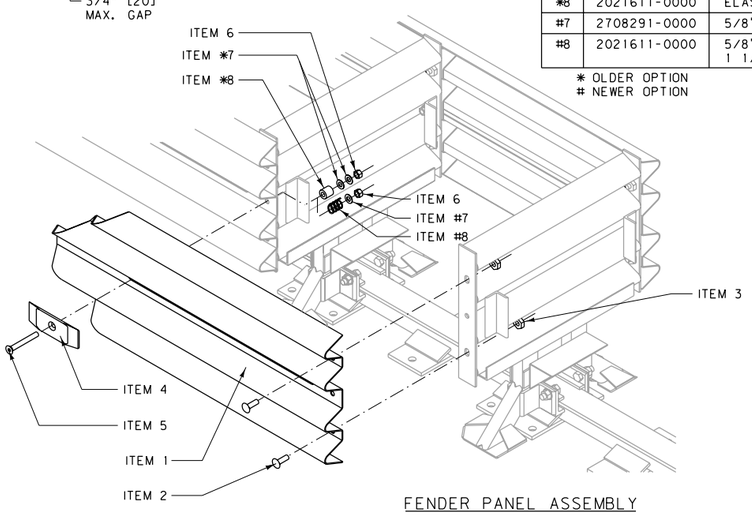

FENDER PANEL ASSEMBLY

ASSEMBLY NO. 3540040-0000

ITEM	STOCK NO.	DESCRIPTION	METRIC DESCRIPTION	REQ'D
1	SEE TABLE A	TENSION BACKUP	TENSION BACKUP	1
2	2760141-0000	SIDE PANEL	SIDE PANEL	2
9	3525300-0000	ANCHOR KIT	ANCHOR KIT	3
10	2704191-0000	5/8" DIA. HEX NUT	M16 HEX NUT	4
11	2699341-0000	5/8" DIA. x 2" RAIL BOLT	M16 x 51 RAIL BOLT	4
12	2760293-0000	CARTRIDGE SUPPORT BRACKET	CARTRIDGE SUPPORT BRACKET	1
13	2760294-0000	CARTRIDGE SUPPORT LOCKING BAR	CARTRIDGE SUPPORT LOCKING BAR	1

TABLE A:

ASSEMBLY NO.	STOCK NO.	DESCRIPTION	METRIC DESCRIPTION
3540031-0000	2760011-0000	24" WIDE TENSION BACKUP	610 WIDE TENSION BACKUP
3540032-0000	2760021-0000	30" WIDE TENSION BACKUP	760 WIDE TENSION BACKUP
3540033-0000	2760031-0000	36" WIDE TENSION BACKUP	915 WIDE TENSION BACKUP

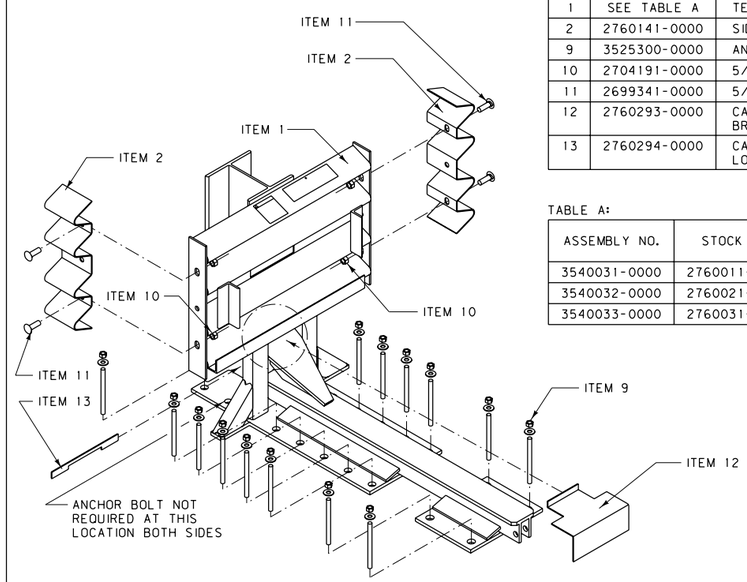

BACKUP ASSEMBLY

NOTE:

③ WHEN TRANSITIONING THE QUADGUARD SYSTEM TO EXISTING BARRIERS, SEE MANUFACTURER FOR PROPER USE OF SIDE PANEL (ITEM 2).

UNITS SHOWN IN BRACKETS [] ARE METRIC AND ARE IN MILLIMETERS (mm) UNLESS OTHER UNITS ARE SHOWN.

DETAILED DRAWING

REFERENCE
STANDARD SPEC.
SECTION 606

DWG. NO.
606-31A

IMPACT ATTENUATOR - QUADGUARD ASSEMBLY DETAILS

EFFECTIVE: SEPTEMBER 2014

MDT MONTANA DEPARTMENT OF TRANSPORTATION

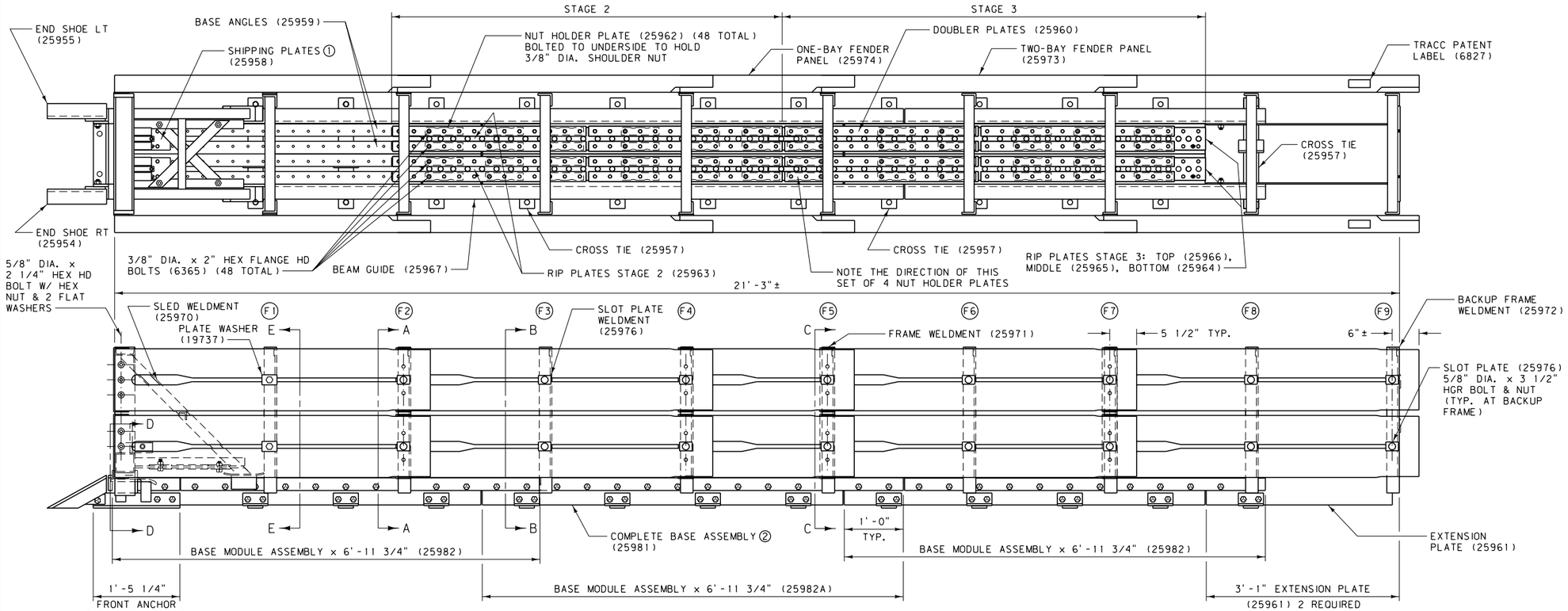

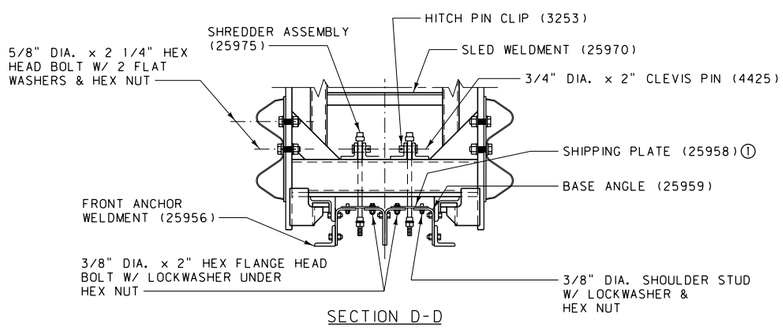

SECTION D-D

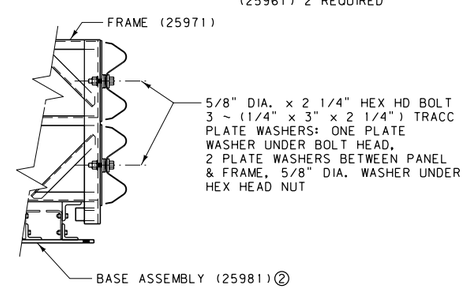

SECTION E-E
(F1) SHOWN

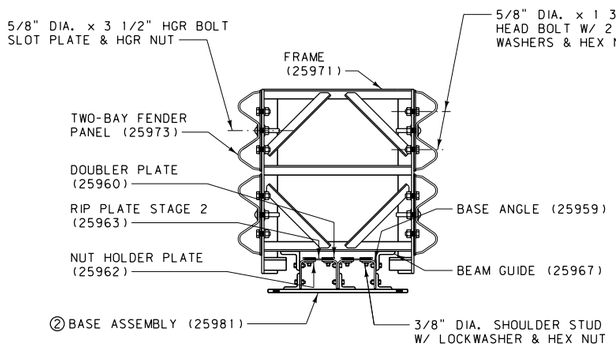

SECTION A-A
(F2) SHOWN (F4) SIMILAR

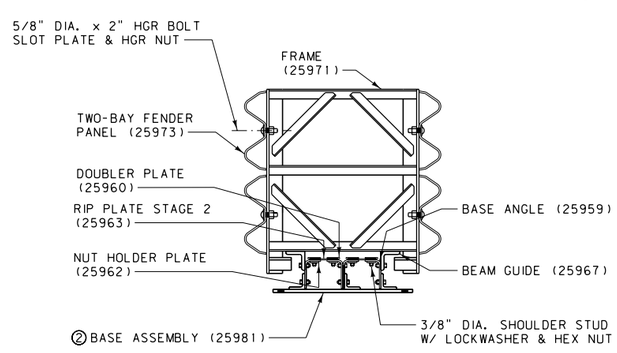

SECTION B-B
(F3) SHOWN (F6) & (F8) SIMILAR

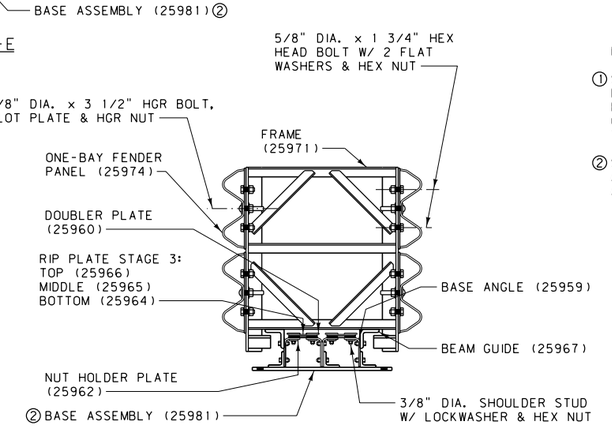

SECTION C-C
(F5) SHOWN (F7) SIMILAR

BILL OF MATERIAL

PART NUMBER	QTY	DESCRIPTION
		TRACC (25980A)
19737G	12	1/4" x 3" x 2 1/4" TRACC WASHER
25970A	1	SLED WELDMENT
25971A	8	FRAME WELDMENT
25972A	1	BACKUP FRAME WELDMENT
25973A	16	TWO-BAY FENDER PANEL
25974A	4	ONE-BAY FENDER PANEL
25975A	2	SHREDDER ASSEMBLY
25976A	32	SLOT PLATE
25981A	1	ASSEMBLED BASE (SEE NOTE 2)
		TRACC BASE (25981A)
3256G	48	3/8" DIA. SHOULDER NUT
3361G	40	5/8" DIA. HEAVY HEX NUT
3391G	40	5/8" DIA. x 1 3/4" HEX HEAD BOLT
4252G	180	3/8" DIA. HEX NUT
4258G	180	3/8" DIA. LOCK WASHER
6340G	178	3/8" DIA. x 1 1/2" SHOULDER STUD
6365G	50	3/8" DIA. x 2" HEX FLANGE HD BOLT
25954A	1	END SHOE, RIGHT
25955A	1	END SHOE, LEFT
25956A	1	FRONT ANCHOR WELDMENT
25957A	3	CROSS TIE
25958G	2	RIP PLATE, STAGE 1 (SHIPPING PL.)
25960G	16	DOUBLERS
25961G	2	EXTENSION PLATE, REAR
25962G	48	NUT HOLDER (NUT RETAINER PLATE)
25963G	2	RIP PLATE, STAGE 2
25964G	2	RIP PLATE, STAGE 3, BOTTOM
25965G	2	RIP PLATE, STAGE 3, MIDDLE
25966G	2	RIP PLATE, STAGE 3, TOP
25982A	3	BASE MODULE ASSEMBLY
		SHOP HARDWARE
3253G	2	HITCH PIN CLIP
3340G	32	5/8" DIA. HGR NUT
3361G	46	5/8" DIA. HEX NUT
3391G	32	5/8" DIA. x 1 3/4" HEX HEAD BOLT
3400G	12	5/8" DIA. x 2" HGR BOLT
3435G	20	5/8" DIA. x 3 1/2" HGR BOLT
4372G	88	5/8" DIA. FLAT WASHER
4425G	2	3/4" DIA. x 2" CLEVIS PIN
5306G	14	5/8" DIA. x 2 1/4" HEX HEAD BOLT
6827B	2	TRACC PATENT LABEL

NOTES:

① SHIPPING PLATES MAINTAIN SLED POSITION DURING SHIPPING. IT IS NOT NECESSARY TO REMOVE SHIPPING PLATES AFTER INSTALLATION OR REPLACE AFTER REPAIRING DAMAGE TO TRACC UNIT.

② SEE MANUFACTURER FOR ADDITIONAL DETAILS AND DRAWINGS SHOWING COMPLETE ASSEMBLY OF ALL BASE COMPONENTS.

DETAILED DRAWING

REFERENCE STANDARD SPEC. SECTION 606

DWG. NO. 606-31B

IMPACT ATTENUATOR TRACC ASSEMBLY DETAILS

EFFECTIVE: SEPTEMBER 2014

MDT MONTANA DEPARTMENT OF TRANSPORTATION

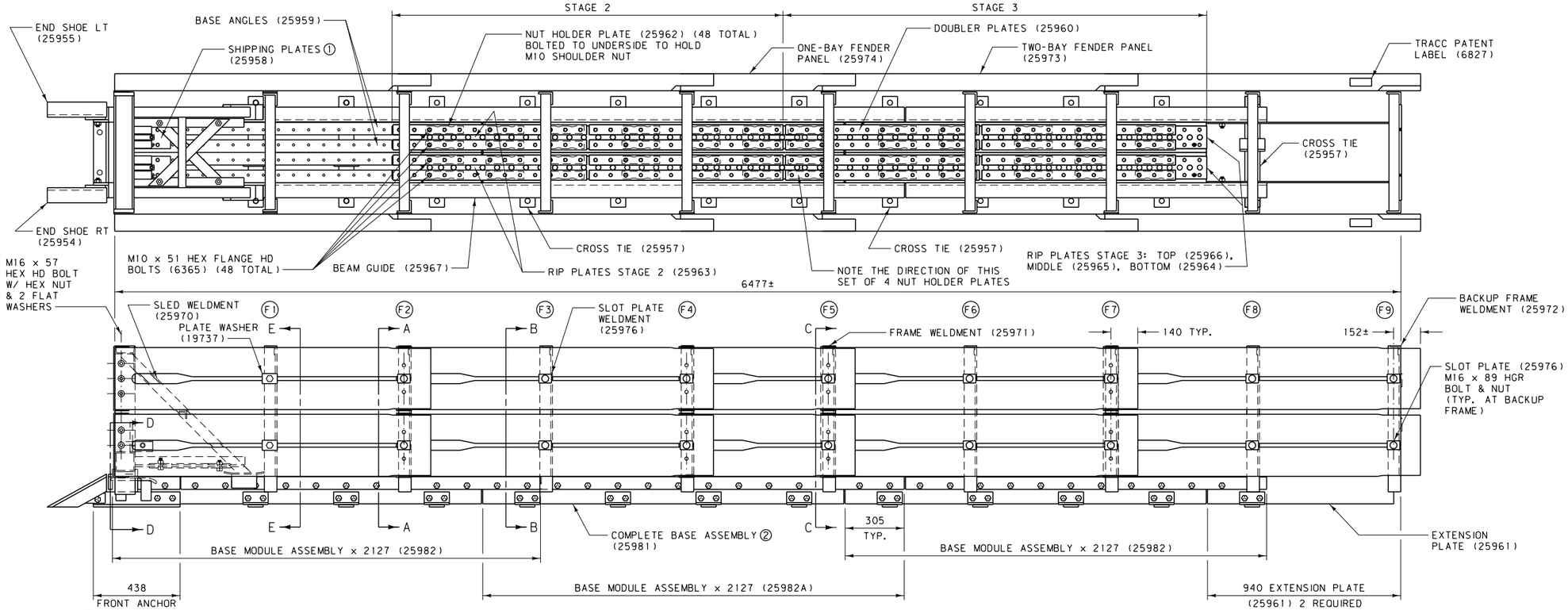

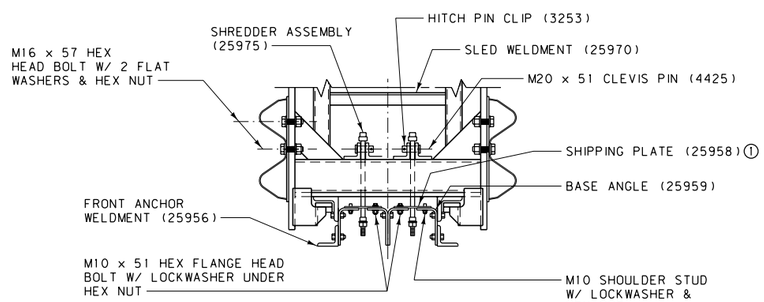

SECTION D-D

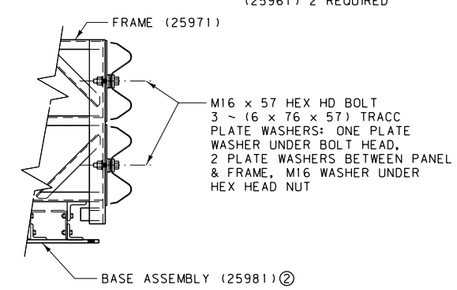

SECTION E-E
(F1) SHOWN

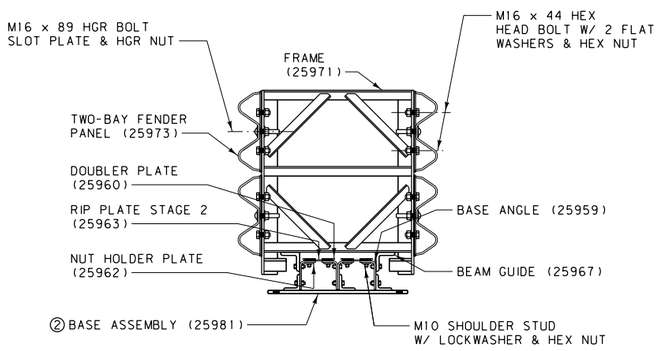

SECTION A-A
(F2) SHOWN (F4) SIMILAR

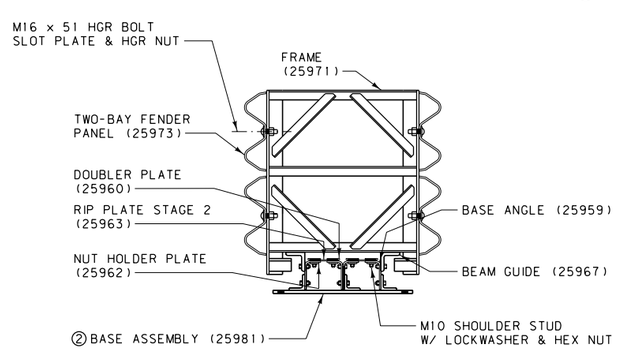

SECTION B-B
(F3) SHOWN (F6) & (F8) SIMILAR

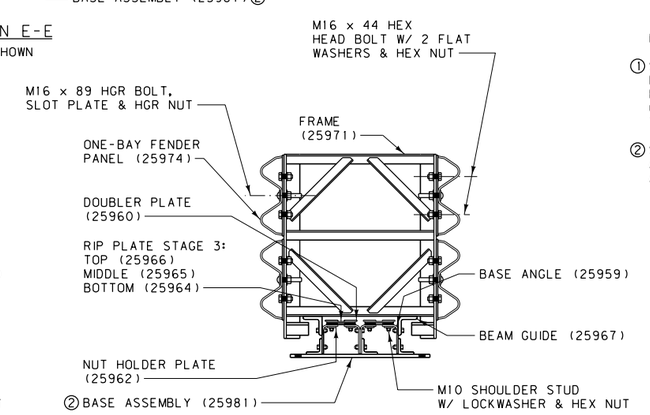

SECTION C-C
(F5) SHOWN (F7) SIMILAR

BILL OF MATERIAL

PART NUMBER	QTY	DESCRIPTION
		TRACC (25980A)
19737G	12	6 x 76 x 57 TRACC WASHER
25970A	1	SLED WELDMENT
25971A	8	FRAME WELDMENT
25972A	1	BACKUP FRAME WELDMENT
25973A	16	TWO-BAY FENDER PANEL
25974A	4	ONE-BAY FENDER PANEL
25975A	2	SHREDDER ASSEMBLY
25976A	32	SLOT PLATE
25981A	1	ASSEMBLED BASE (SEE NOTE 2)
		TRACC BASE (25981A)
3256G	48	M10 SHOULDER NUT
3361G	40	M16 HEAVY HEX NUT
3391G	40	M16 x 44 HEX HEAD BOLT
4252G	180	M10 HEX NUT
4258G	180	M10 LOCK WASHER
6340G	178	M10 x 38 SHOULDER STUD
6365G	50	M10 x 51 HEX FLANGE HD BOLT
25954A	1	END SHOE, RIGHT
25955A	1	END SHOE, LEFT
25956A	1	FRONT ANCHOR WELDMENT
25957A	3	CROSS TIE
25958G	2	RIP PLATE, STAGE 1 (SHIPPING PL.)
25960G	16	DOUBLERS
25961G	2	EXTENSION PLATE, REAR
25962G	48	NUT HOLDER (NUT RETAINER PLATE)
25963G	2	RIP PLATE, STAGE 2
25964G	2	RIP PLATE, STAGE 3, BOTTOM
25965G	2	RIP PLATE, STAGE 3, MIDDLE
25966G	2	RIP PLATE, STAGE 3, TOP
25982A	3	BASE MODULE ASSEMBLY
		SHOP HARDWARE
3253G	2	HITCH PIN CLIP
3340G	32	M16 HGR NUT
3361G	46	M16 HEX NUT
3391G	32	M16 x 44 HEX HEAD BOLT
3400G	12	M16 x 51 HGR BOLT
3435G	20	M16 x 89 HGR BOLT
4372G	88	M16 FLAT WASHER
4425G	2	M20 x 51 CLEVIS PIN
5306G	14	M16 x 57 HEX HEAD BOLT
6827B	2	TRACC PATENT LABEL

NOTES:

① SHIPPING PLATES MAINTAIN SLED POSITION DURING SHIPPING. IT IS NOT NECESSARY TO REMOVE SHIPPING PLATES AFTER INSTALLATION OR REPLACE AFTER REPAIRING DAMAGE TO TRACC UNIT.

② SEE MANUFACTURER FOR ADDITIONAL DETAILS AND DRAWINGS SHOWING COMPLETE ASSEMBLY OF ALL BASE COMPONENTS.

ALL DIMENSIONS ARE MILLIMETERS (mm) UNLESS OTHERWISE NOTED.

DETAILED DRAWING

REFERENCE STANDARD SPEC. SECTION 606

DWG. NO. 606-31B

IMPACT ATTENUATOR - TRACC ASSEMBLY DETAILS (METRIC)

EFFECTIVE: SEPTEMBER 2014

MDT MONTANA DEPARTMENT OF TRANSPORTATION

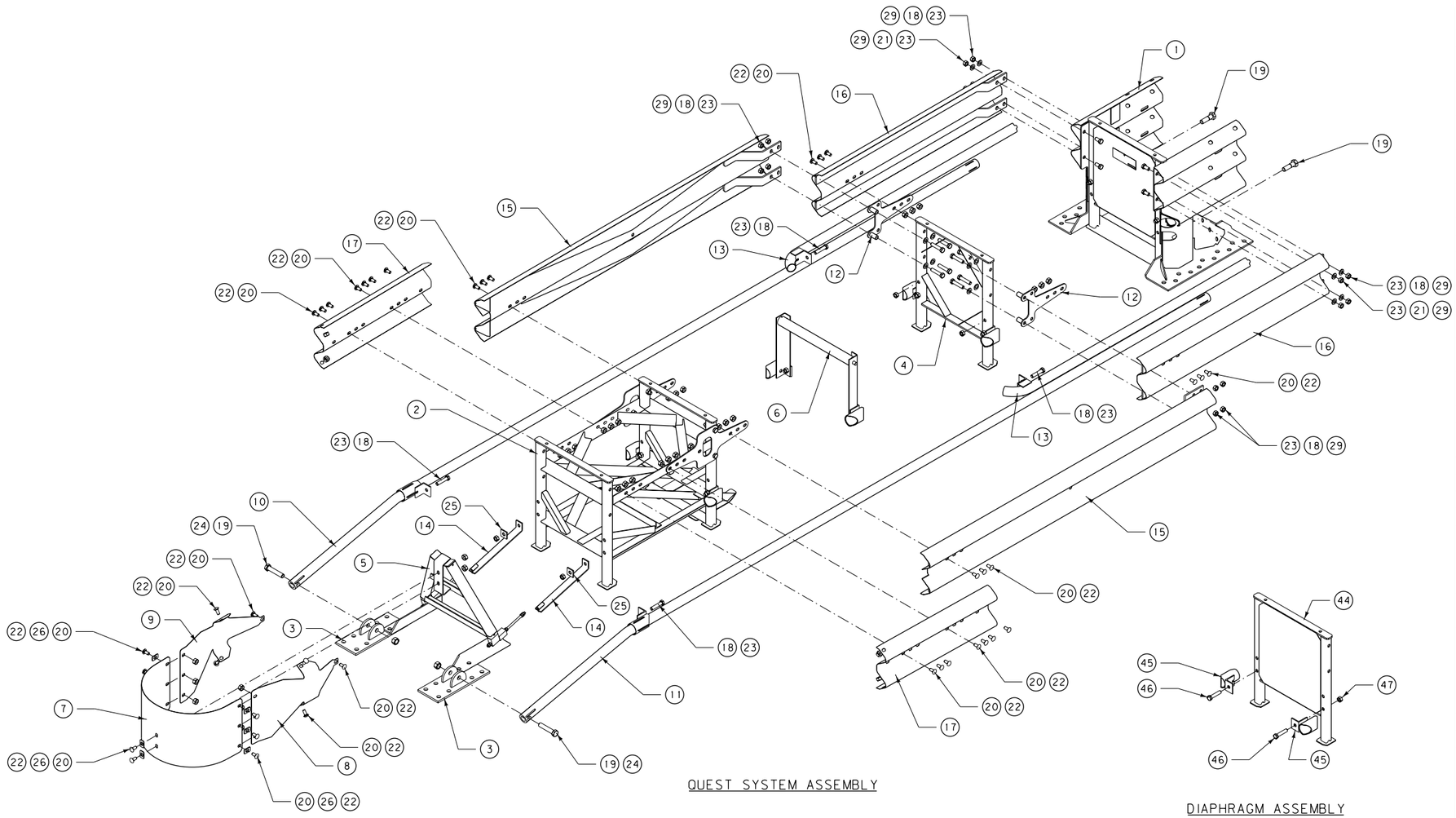

QUEST SYSTEM ASSEMBLY

DIAPHRAGM ASSEMBLY
(ITEM 4)

PARTS LIST			
ITEM	STOCK NO.	DESCRIPTION	QTY.
1	3562003-0000	BACKUP ASSEMBLY	1
2	3562002-0000	BAY 1 SUPPORT FRAME ASSEMBLY	1
3	2762015-0000	FRONT ANCHOR	2
4	3562005-0000	BAY 3 DIAPHRAGM ASSEMBLY	1
5	3562001-0000	TRIGGER ASSEMBLY	1
6	3562004-0000	BAY 2 BRIDGE ASSEMBLY	1
7	2762026-0000	NOSE	1
8	2762024-0000	RT. NOSE TRANSITION	1
9	2762025-0000	LT. NOSE TRANSITION	1
10	276200L-0000	LT. SHAPER RAIL	1
11	276200R-0000	RT. SHAPER RAIL	1
12	2762022-0000	DIAPHRAGM PANEL BRACKET	2
13	2762023-0000	REAR RAIL	2
14	2762007-0000	TRIGGER STRAP	2
15	2762013-0000	BAY 2 PANEL	2
16	2762014-0000	BAY 3 PANEL	2
17	2762033-0000	BAY 1 PANEL	2
18	2699251-0000	3/4" DIA. x 3 1/2" HEX BOLT	16
19	2701014-0000	1" DIA. x 5" HEX BOLT	4
20	2701811-0000	5/8" DIA. x 1 1/4" RAIL BOLT	40
21	2701931-0000	3/4" DIA. x 1 1/2" HEX BOLT	4
22	2704191-0000	5/8" DIA. HEX NUT	40
23	2704091-0000	3/4" DIA. HEX NUT	20
24	2704161-0000	1" DIA. HEX NUT	2
25	2708161-0000	2" x 2" x 1/4" BAR WASHER	2
26	2708871-1000	1 1/4" x 2" x 1/8" ROUNDED BAR WASHER	8
27	2700031-0000	INSTALL INSTRUCTIONS	1
28	2735831-3500	MATERIAL SAFETY INFO NOTICE	1
29	2708081-0000	3/4" DIA. (2" O.D.) HVY. FLAT WASHER	16
TRIGGER ASSEMBLY (ITEM 5)			
30	2762008-0000	TRIGGER FRAME	1
31	2762011-0000	RT. TRIGGER ANCHOR	1
32	2762012-0000	LT. TRIGGER ANCHOR	1
33	2699034-0000	1/2" DIA. x 13 1/2" THREADED ROD	2
34	2704911-0000	1/2" DIA. HEX NUT	12
SUPPORT FRAME ASSEMBLY (ITEM 2)			
35	2762010-0000	BAY 1 SUPPORT FRAME	1
36	2762003-0000	DIAPHRAGM RAIL GUIDE	2
37	2699251-0000	3/4" DIA. x 3 1/2" HEX BOLT	6
38	2704091-0000	3/4" DIA. HEX NUT	6
39	2762021-0000	BAY 1 FRAME PANEL BRACKET	2
BRIDGE (ITEM 6)			
40	2762016-0000	BRIDGE	1
41	2762003-0000	DIAPHRAGM RAIL GUIDE	2
42	2704091-0000	3/4" DIA. HEX NUT	2
43	2701931-0000	3/4" DIA. x 1 1/2" HEX BOLT	2
DIAPHRAGM ASSEMBLY (ITEM 4)			
44	2762018-0000	BAY 3 DIAPHRAGM	1
45	2762003-0000	DIAPHRAGM RAIL GUIDE	2
46	2699251-0000	3/4" DIA. x 3 1/2" HEX BOLT	2
47	2704091-0000	3/4" DIA. HEX NUT	2
BACKUP ASSEMBLY (ITEM 1)			
48	2762020-0000	BACKUP	1
49	2762017-0000	BACKUP SHAPER	2
50	2704091-0000	3/4" DIA. HEX NUT	2
51	2699251-0000	3/4" DIA. x 3 1/2" HEX BOLT	2
52	2735711-0000	CAUTION DECAL	1
53	2735712-3500	PRODUCT DECAL	1
54	2705121-0000	3/16" DIA. x 1/2" SD68BS ST. RIVET	1

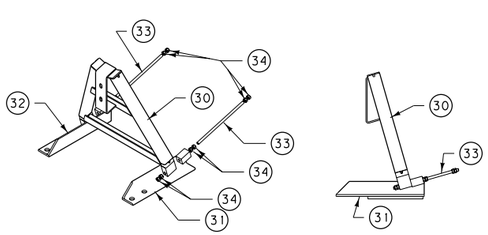

TRIGGER ASSEMBLY
(ITEM 5)

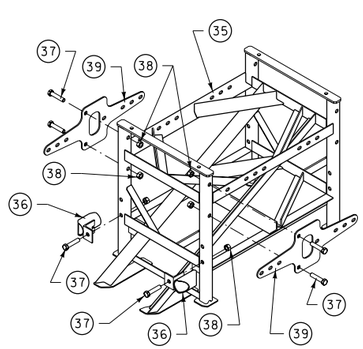

SUPPORT FRAME ASSEMBLY
(ITEM 2)

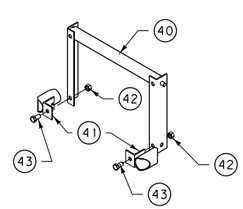

BRIDGE
(ITEM 6)

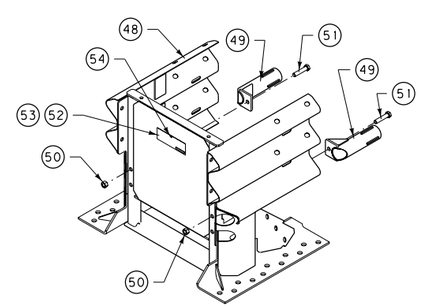

BACKUP ASSEMBLY
(ITEM 1)

DETAILED DRAWING

REFERENCE
STANDARD SPEC.
SECTION **606**

DWG. NO.
606-31C

IMPACT ATTENUATOR -
QUEST
ASSEMBLY DETAILS

EFFECTIVE: SEPTEMBER 2014

MDT MONTANA DEPARTMENT OF TRANSPORTATION

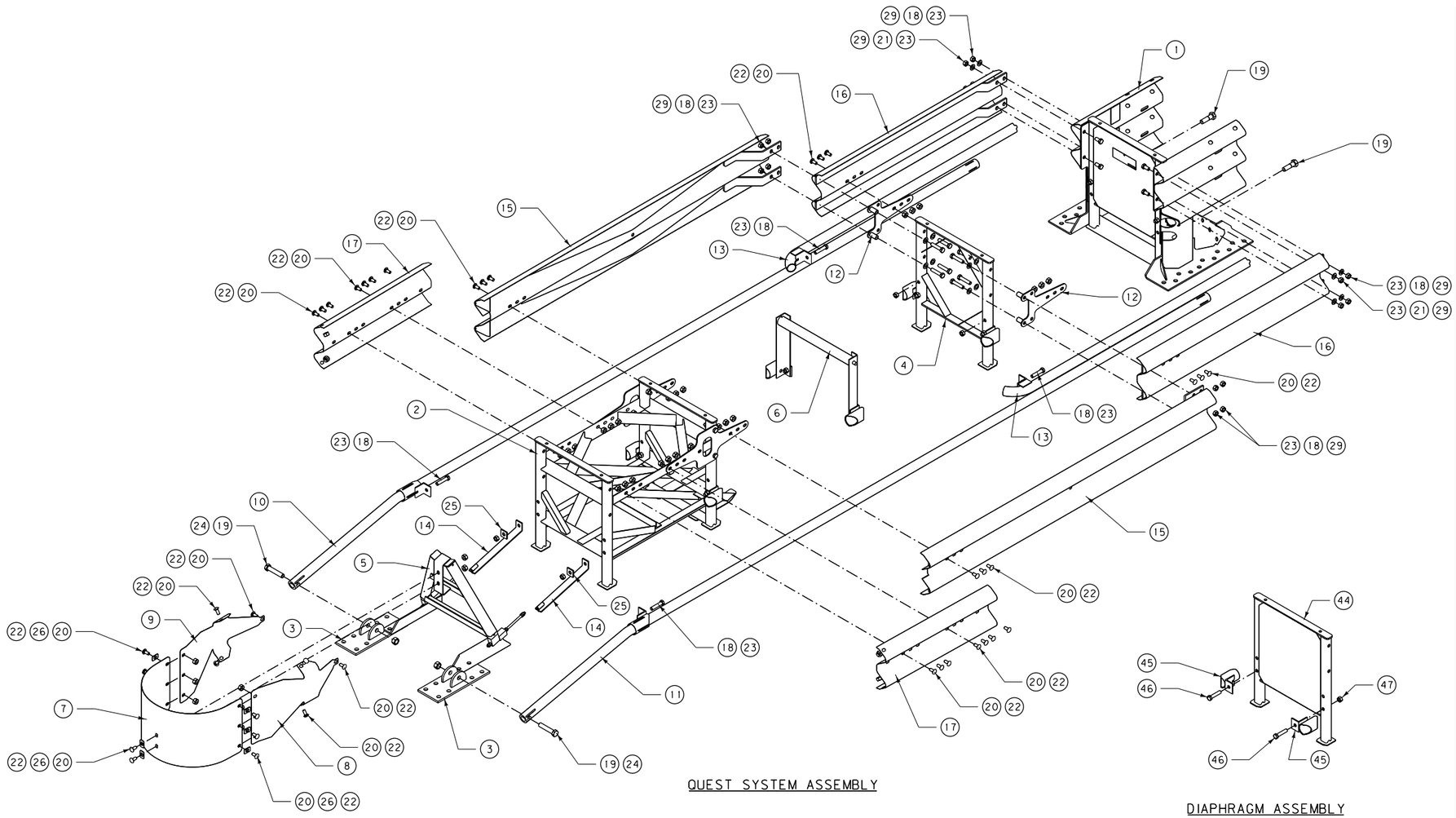

QUEST SYSTEM ASSEMBLY

DIAPHRAGM ASSEMBLY
(ITEM 4)

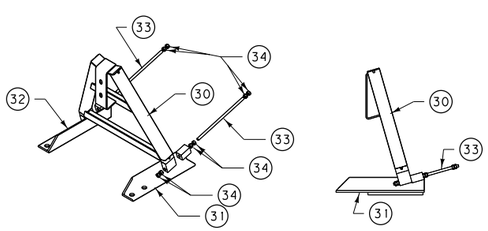

TRIGGER ASSEMBLY
(ITEM 5)

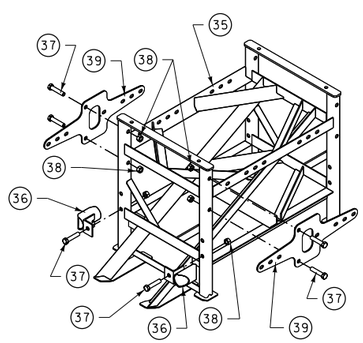

SUPPORT FRAME ASSEMBLY
(ITEM 2)

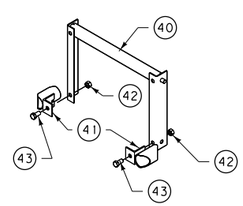

BRIDGE
(ITEM 6)

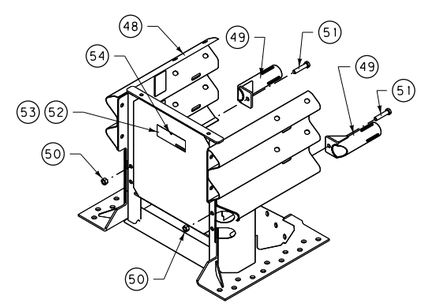

BACKUP ASSEMBLY
(ITEM 1)

PARTS LIST

ITEM	STOCK NO.	DESCRIPTION	QTY.
1	3562003-0000	BACKUP ASSEMBLY	1
2	3562002-0000	BAY 1 SUPPORT FRAME ASSEMBLY	1
3	2762015-0000	FRONT ANCHOR	2
4	3562005-0000	BAY 3 DIAPHRAGM ASSEMBLY	1
5	3562001-0000	TRIGGER ASSEMBLY	1
6	3562004-0000	BAY 2 BRIDGE ASSEMBLY	1
7	2762026-0000	NOSE	1
8	2762024-0000	RT. NOSE TRANSITION	1
9	2762025-0000	LT. NOSE TRANSITION	1
10	276200L-0000	LT. SHAPER RAIL	1
11	276200R-0000	RT. SHAPER RAIL	1
12	2762022-0000	DIAPHRAGM PANEL BRACKET	2
13	2762023-0000	REAR RAIL	2
14	2762007-0000	TRIGGER STRAP	2
15	2762013-0000	BAY 2 PANEL	2
16	2762014-0000	BAY 3 PANEL	2
17	2762033-0000	BAY 1 PANEL	2
18	2699251-0000	M20 x 89 HEX BOLT	16
19	2701014-0000	M24 x 127 HEX BOLT	4
20	2701811-0000	M16 x 32 RAIL BOLT	40
21	2701931-0000	M20 x 38 HEX BOLT	4
22	2704191-0000	M16 HEX NUT	40
23	2704091-0000	M20 HEX NUT	20
24	2704161-0000	M24 HEX NUT	2
25	2708161-0000	51 x 51 x 6 BAR WASHER	2
26	2708871-1000	32 x 51 x 3 ROUNDED BAR WASHER	8
27	2700031-0000	INSTALL INSTRUCTIONS	1
28	2735831-3500	MATERIAL SAFETY INFO NOTICE	1
29	2708081-0000	M20 (51 O.D.) HVY. FLAT WASHER	16
TRIGGER ASSEMBLY (ITEM 5)			
30	2762008-0000	TRIGGER FRAME	1
31	2762011-0000	RT. TRIGGER ANCHOR	1
32	2762012-0000	LT. TRIGGER ANCHOR	1
33	2699034-0000	13 DIA. x 343 THREADED ROD	2
34	2704911-0000	M12 HEX NUT	12
SUPPORT FRAME ASSEMBLY (ITEM 2)			
35	2762010-0000	BAY 1 SUPPORT FRAME	1
36	2762003-0000	DIAPHRAGM RAIL GUIDE	2
37	2699251-0000	M20 x 89 HEX BOLT	6
38	2704091-0000	M20 HEX NUT	6
39	2762021-0000	BAY 1 FRAME PANEL BRACKET	2
BRIDGE (ITEM 6)			
40	2762016-0000	BRIDGE	1
41	2762003-0000	DIAPHRAGM RAIL GUIDE	2
42	2704091-0000	M20 HEX BOLT	2
43	2701931-0000	M20 x 38 HEX BOLT	2
DIAPHRAGM ASSEMBLY (ITEM 4)			
44	2762018-0000	BAY 3 DIAPHRAGM	1
45	2762003-0000	DIAPHGRAGM RAIL GUIDE	2
46	2699251-0000	M20 x 89 HEX BOLT	2
47	2704091-0000	M20 HEX BOLT	2
BACKUP ASSEMBLY (ITEM 1)			
48	2762020-0000	BACKUP	1
49	2762017-0000	BACKUP SHAPER	2
50	2704091-0000	M20 HEX NUT	2
51	2699251-0000	M20 x 89 HEX BOLT	2
52	2735711-0000	CAUTION DECAL	1
53	2735712-3500	PRODUCT DECAL	1
54	2705121-0000	4.8 DIA. x 12.7 SD68BS ST. RIVET	1

ALL DIMENSIONS ARE MILLIMETERS (mm) UNLESS OTHERWISE NOTED.

DETAILED DRAWING

REFERENCE
STANDARD SPEC.
SECTION **606**

DWG. NO.
606-31C

IMPACT ATTENUATOR - QUEST
ASSEMBLY DETAILS (METRIC)

EFFECTIVE: SEPTEMBER 2014

MDT MONTANA DEPARTMENT OF TRANSPORTATION

ITEM	STOCK NO.	DESCRIPTION	METRIC DESCRIPTION	REQ'D
1	SEE TABLE A	DIAPHRAGM	DIAPHRAGM	1
8	2760091-0000	MONORAIL GUIDE	MONORAIL GUIDE	2
9	2704341-0000	3/4" DIA. HEX NUT	M20 HEX NUT	4
10	2699121-0000	3/4" DIA. x 2" HEX BOLT	M20 x 51 HEX BOLT	4
11	2708201-0000	3/4" DIA. LOCK WASHER	M20 LOCK WASHER	4
12	2760292-0000	CARTRIDGE SUPPORT BRACKET	CARTRIDGE SUPPORT BRACKET	2

TABLE A:

ASSEMBLY NO.	STOCK NO.	DESCRIPTION	METRIC DESCRIPTION
3540071-0000	2761011-0000	24" WIDE DIAPHRAGM	610 WIDE DIAPHRAGM
3540072-0000	2761021-0000	30" WIDE DIAPHRAGM	760 WIDE DIAPHRAGM
3540073-0000	2761031-0000	36" WIDE DIAPHRAGM	915 WIDE DIAPHRAGM

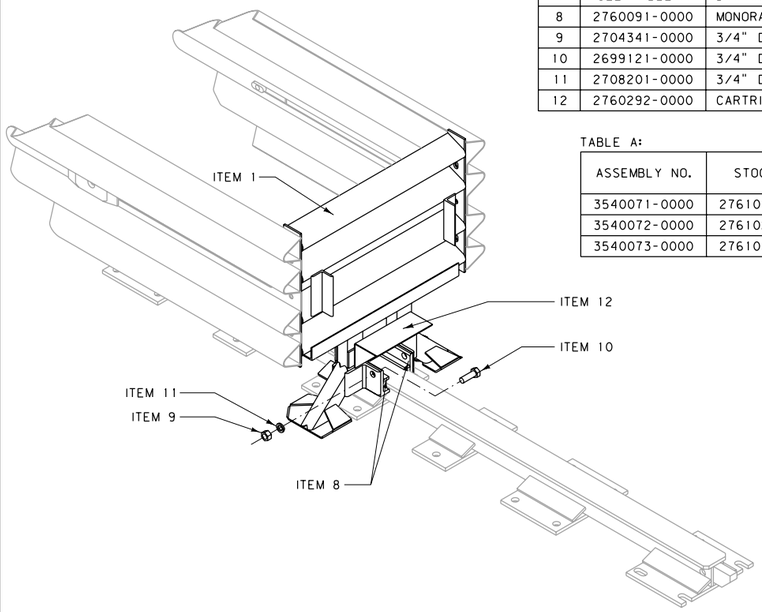

DIAPHRAGM ASSEMBLY

ITEM	STOCK NO.	DESCRIPTION	METRIC DESCRIPTION	REQ'D
1	2760072-0*00	NARROW LT. NOSE	NARROW LT. NOSE	1
2	2760073-0*00	NARROW RT. NOSE	NARROW RT. NOSE	1
3	2760076-0000	NOSE CART. SUPPORT BRACKET	NOSE CART. SUPPORT BRACKET	1
4	2760297-0000	NOSE BAY CART. SUPPORT BRACKET	NOSE BAY CART. SUPPORT BRACKET	1
5	2699065-0000	1/4" DIA. x 3/4" HEX BOLT	M6 x 19 HEX BOLT	1
6	2699841-0000	5/8" DIA. x 1 1/4" HEX BOLT	M16 x 32 HEX BOLT	6
7	2700501-0000	5/8" DIA. x 2" HEX BOLT	M16 x 51 HEX BOLT	6
8	2704151-0000	1/4" DIA. HEX NUT	M6 HEX NUT	6
9	2704191-0000	5/8" DIA. RAIL HEX NUT	M16 RAIL HEX NUT	6
10	2704851-0000	5/8" DIA. x 2" O.D. x 11" HEX NUT COUPLING	M16 x 51 O.D. x 279 HEX NUT COUPLING	6
11	2708281-0000	1/4" DIA. LOCK WASHER	M6 LOCK WASHER	6
12	2708291-0000	5/8" DIA. x 1 3/4" O.D. WASHER	M16 x 44 O.D. WASHER	6

* 1 INDICATES YELLOW
* 2 INDICATES BLACK

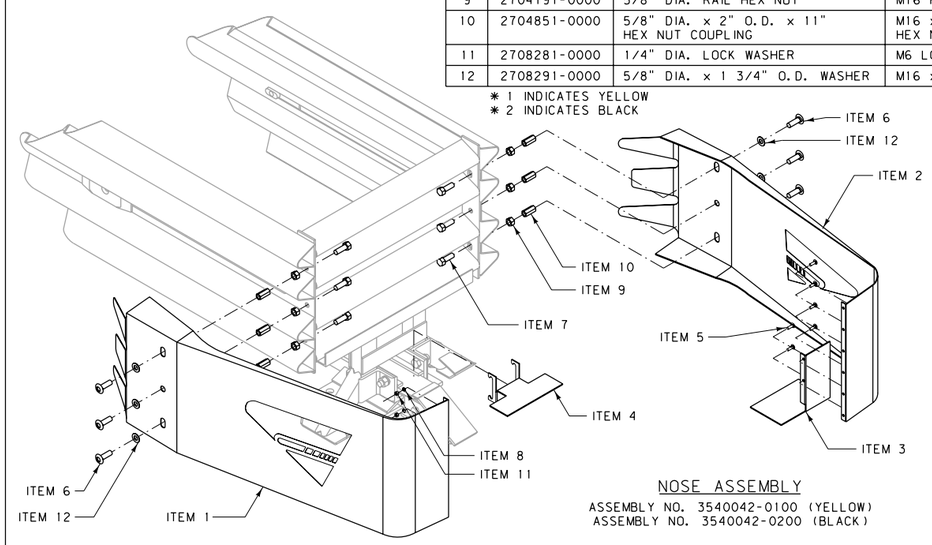

NOSE ASSEMBLY

ASSEMBLY NO. 3540042-0100 (YELLOW)
ASSEMBLY NO. 3540042-0200 (BLACK)

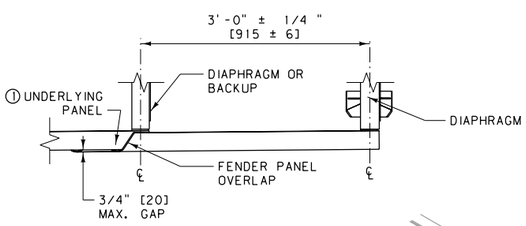

ITEM	STOCK NO.	DESCRIPTION	METRIC DESCRIPTION	REQ'D
1	2760081-0000	FENDER PANEL	FENDER PANEL	1
2	2699341-0000	5/8" DIA. x 2" RAIL BOLT	M16 x 51 RAIL BOLT	2
3	2704191-0000	5/8" DIA. HEX NUT	M16 HEX NUT	2
4	2708841-0000	CAST MUSHROOM WASHER	CAST MUSHROOM WASHER	1
5	2706604-0000	5/8" DIA. x 5" SCREW	M16 x 127 SCREW	1
6	2704141-0000	5/8" DIA. HEX NUT	M16 HEX NUT	1
7	2708291-0000	5/8" DIA. WASHER	M16 WASHER	1
8	2021611-0000	5/8" DIA. x 1 1/4" O.D. x 1 1/2" DIE SPRING	M16 x 32 O.D. x 38 DIE SPRING	1

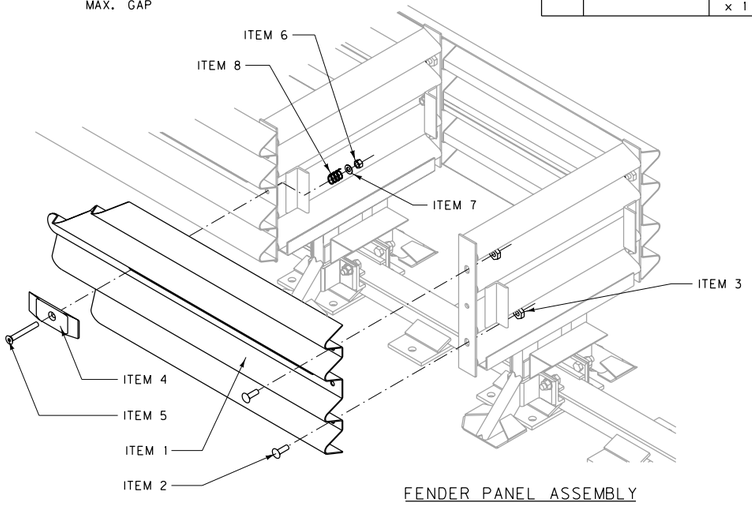

FENDER PANEL ASSEMBLY

ASSEMBLY NO. 3540040-0000

NOTE:

① UNDERLYING PANEL IS EITHER ANOTHER FENDER PANEL OR, IN THE CASE OF THE LAST FENDER PANEL IT COULD BE A BACKUP SIDE PANEL, EXTENSION PANEL OR TRANSITION PANEL.

② TWO FENDER PANEL ASSEMBLIES ARE REQUIRED PER BAY.

ITEM	STOCK NO.	DESCRIPTION	METRIC DESCRIPTION	REQ'D
1	SEE TABLE A	TENSION BACKUP	TENSION BACKUP	1
2	2760141-0000	SIDE PANEL	SIDE PANEL	2
9	3525300-0000	ANCHOR KIT	ANCHOR KIT	3
10	2704191-0000	5/8" DIA. HEX NUT	M16 HEX NUT	4
11	2699341-0000	5/8" DIA. x 2" RAIL BOLT	M16 x 51 RAIL BOLT	4
12	2760293-0000	CARTRIDGE SUPPORT BRACKET	CARTRIDGE SUPPORT BRACKET	1
13	2760294-0000	CARTRIDGE SUPPORT LOCKING BAR	CARTRIDGE SUPPORT LOCKING BAR	1

TABLE A:

ASSEMBLY NO.	STOCK NO.	DESCRIPTION	METRIC DESCRIPTION
3540031-0000	2760011-0000	24" WIDE TENSION BACKUP	610 WIDE TENSION BACKUP
3540032-0000	2760021-0000	30" WIDE TENSION BACKUP	760 WIDE TENSION BACKUP
3540033-0000	2760031-0000	36" WIDE TENSION BACKUP	915 WIDE TENSION BACKUP

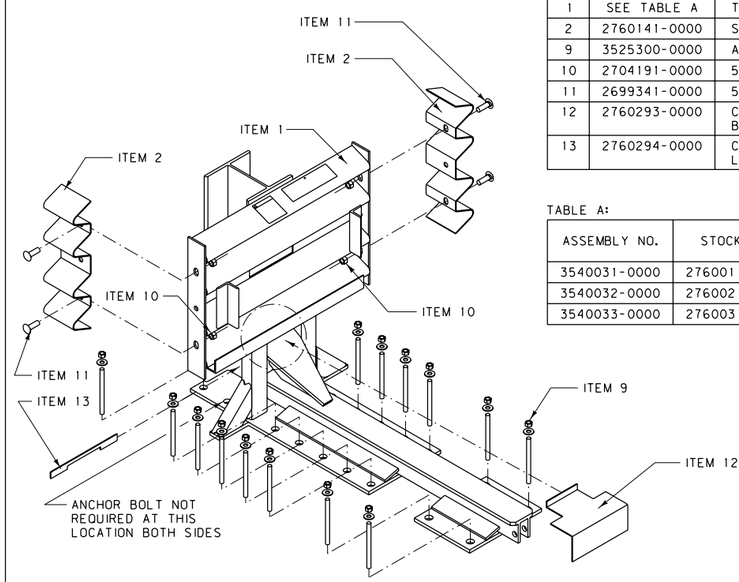

BACKUP ASSEMBLY

NOTE:

③ WHEN TRANSITIONING THE QUADGUARD II SYSTEM TO EXISTING BARRIERS, SEE MANUFACTURER FOR PROPER USE OF SIDE PANEL (ITEM 2).

UNITS SHOWN IN BRACKETS [] ARE METRIC AND ARE IN MILLIMETERS (mm) UNLESS OTHER UNITS ARE SHOWN.

DETAILED DRAWING

REFERENCE STANDARD SPEC. SECTION 606

DWG. NO. 606-31D

IMPACT ATTENUATOR - QUADGUARD II ASSEMBLY DETAILS

EFFECTIVE: SEPTEMBER 2014

MDT MONTANA DEPARTMENT OF TRANSPORTATION

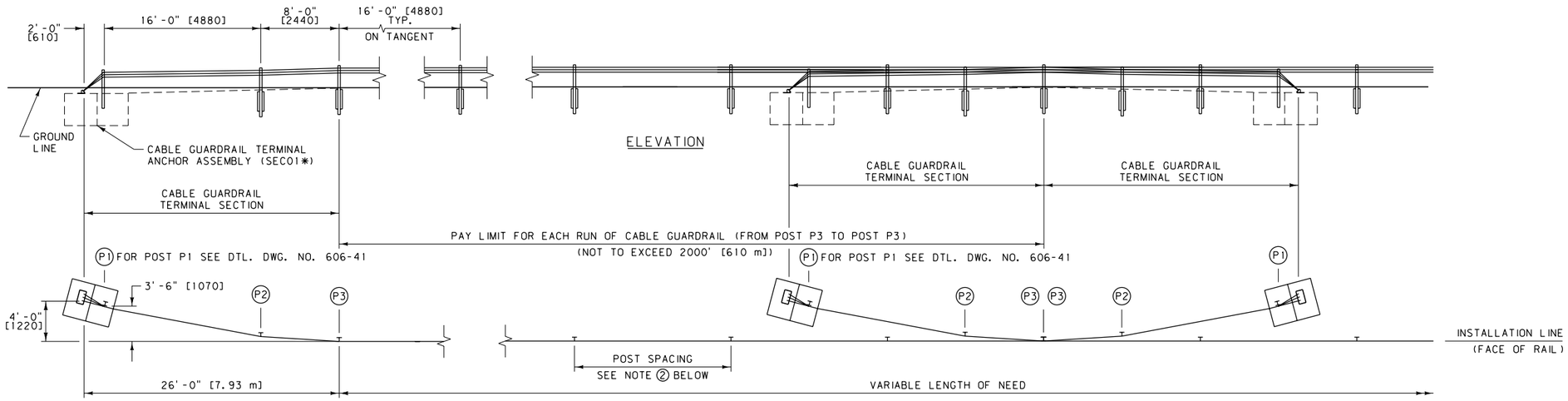

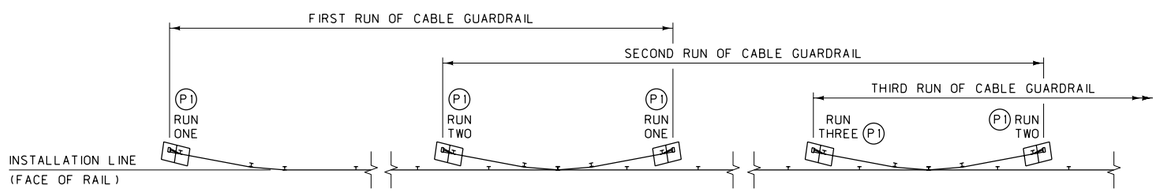

TYPICAL LAYOUT FOR MULTIPLE RUNS OF CABLE GUARDRAIL

EACH RUN OF CABLE GUARDRAIL CONTAINS TWO TERMINAL SECTIONS WITH ANCHOR ASSEMBLIES.

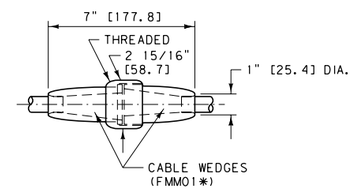

CABLE SPLICE

SPLICE CABLE USING A COUPLING DEVICE AS SHOWN, OR AN ALTERNATE METHOD APPROVED BY THE PROJECT MANAGER

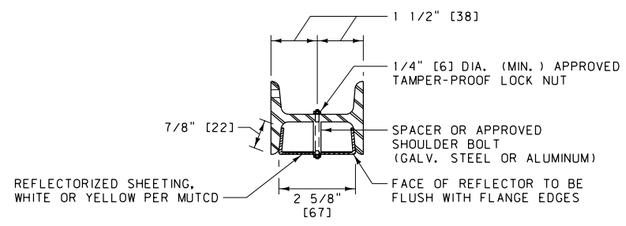

REFLECTOR ALT. "B"

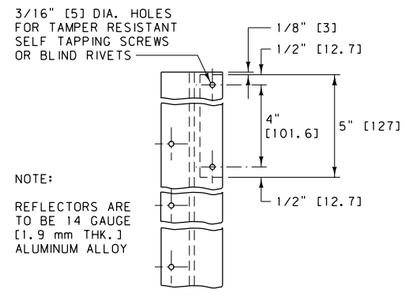

REFLECTOR ALT. "A"

NOTES:

1. FOR CABLE GUARDRAIL RUNS OF:

   1044 FT. [318.42 m] OR LESS: USE COMPENSATING CABLE END ASSEMBLY (RCE01*) ON ONE END AND TURNBUCKLE CABLE END ASSEMBLY * ON THE OTHER END OF EACH CABLE.

   GREATER THAN 1044 FT. [318.42 m], UP TO 2052 FT. [625.86 m] MAXIMUM: USE COMPENSATING CABLE END ASSEMBLY (RCE01*) ON BOTH ENDS OF EACH CABLE.

2. LINE POST SPACING:

   TANGENTS AND CURVES WITH RADII 700 FT. [220 m] AND GREATER: 16 FT. [4880 mm].

   CURVES WITH RADII LESS THAN 700 FT. [220 m] DOWN TO 440 FT. [135 m]: 12 FT. [3660 mm].

   NOTE: DO NOT INSTALL CABLE GUARDRAIL ON THE INSIDE SHOULDER OF ANY CURVE.

3. UNIFORMLY TENSION ALL CABLES TO COMPRESS SPRINGS BY 3 1/2" [90 mm].

4. DO NOT INSTALL CABLE GUARDRAIL FOR OBSTACLES WITHIN 12 FT. [3.7 m] OF THE INSTALLATION LINE.

5. DO NOT USE CABLE GUARDRAIL WITH FILL SLOPES STEEPER THAN 2:1, UNLESS THE DISTANCE BETWEEN THE BACK OF THE POSTS AND THE BREAK IN THE FILL SLOPE IS AT LEAST 8 FT. [2.5 m].

6. ATTACH REFLECTORS TO EVERY OTHER LINE POST (32 FT. [9.76 m] TYP.), BEGINNING AT POST P3. DO NOT ATTACH REFLECTORS TO POSTS P1 AND P2.

7. WIDENING IS REQUIRED IF FINISHED SHOULDER IS LESS THAN 2'-0" [0.6 m] FROM THE TRAFFIC LANE.

8. GUIDANCE FOR TENSIONING CABLES USING THE TURNBUCKLES IS GIVEN IN CABLE TENSIONING TABLES.
   CABLE TENSIONING - NCHRP 230 TESTS HR 22-4 (1986)
   METRIC CABLE TENSIONING - NYDOT STD. M606-1R1 (1996)

* SEE DTL. DWG. NO. 606-80 FOR SCHEDULE OF GUARDRAIL HARDWARE.

CABLE TENSIONING	
TEMPERATURE (°F)	COMPR. # (INCHES)
120 TO 110	1.00"
109 TO 100	1.25"
99 TO 90	1.50"
89 TO 80	1.75"
79 TO 70	2.00"
69 TO 60	2.25"
59 TO 50	2.50"
49 TO 40	2.75"
39 TO 30	3.00"
29 TO 20	3.25"
19 TO 10	3.50"
9 TO 0	3.75"
-1 TO -10	4.00"
-11 TO -20	4.25"

METRIC CABLE TENSIONING	
TEMPERATURE (°C)	COMPR. # (mm)
50 TO 43	25
42 TO 38	32
37 TO 32	38
31 TO 27	45
26 TO 21	50
20 TO 16	57
15 TO 10	64
9 TO 5	70
4 TO -1	75
-2 TO -7	83
-8 TO -12	89
-13 TO -18	95
-19 TO -23	100
-24 TO -29	108

- SPRING COMPRESSION FROM UNLOADED POSITION

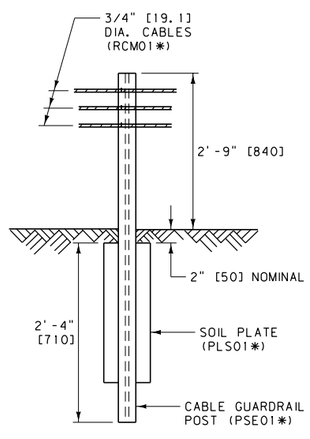

TYPICAL INSTALLATION DETAIL

LINE POST & POST P3

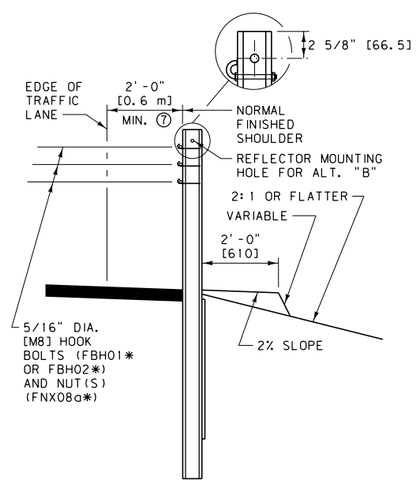

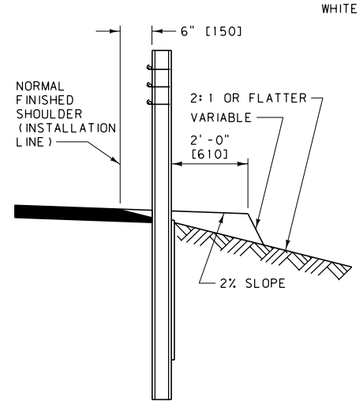

TYPICAL INSTALLATION DETAIL

POST P2

UNITS SHOWN IN BRACKETS [] ARE METRIC AND ARE IN MILLIMETERS (mm) UNLESS OTHER UNITS ARE SHOWN.

DETAILED DRAWING

REFERENCE STANDARD SPEC. SECTION 606

DWG. NO. 606-40

CABLE GUARDRAIL

EFFECTIVE: SEPTEMBER 2014

MDT MONTANA DEPARTMENT OF TRANSPORTATION

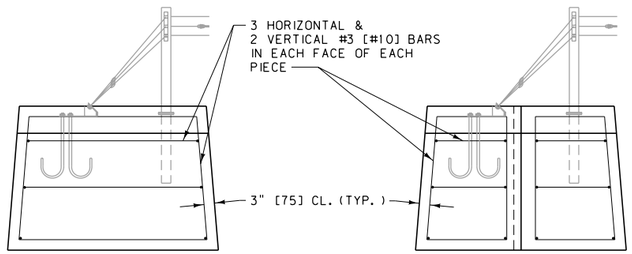

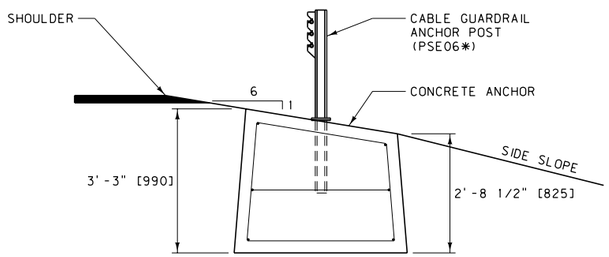

ANCHOR UNIT & REBAR INSTALLATION DETAILS

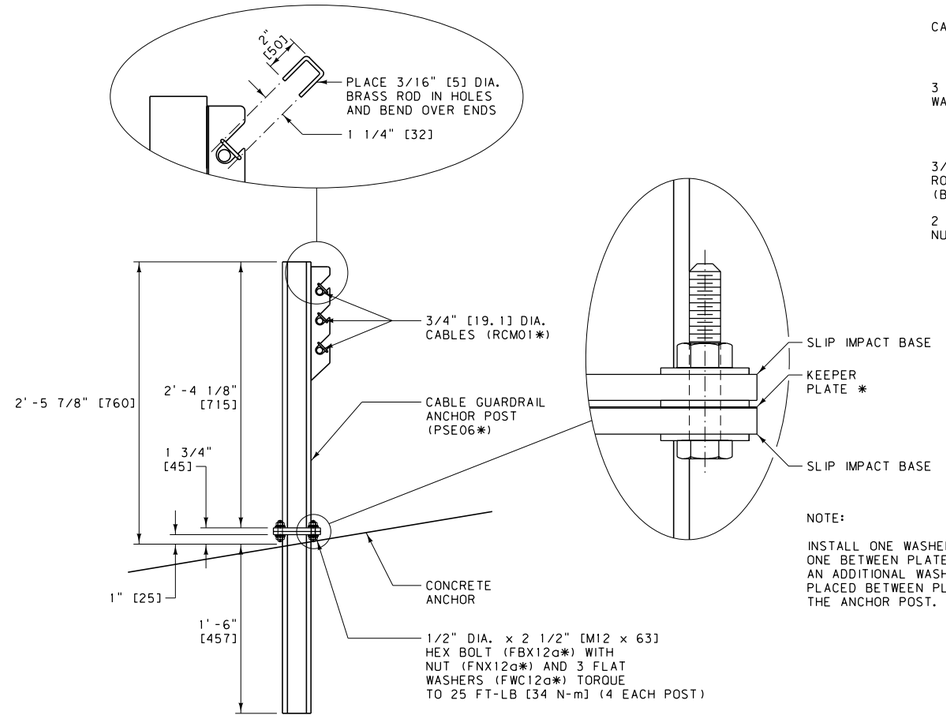

ANCHOR POST DETAIL

NOTE:

INSTALL ONE WASHER UNDER HEAD, ONE BETWEEN PLATES & ONE UNDER NUT. AN ADDITIONAL WASHER MAY BE PLACED BETWEEN PLATES TO PLUMB THE ANCHOR POST.

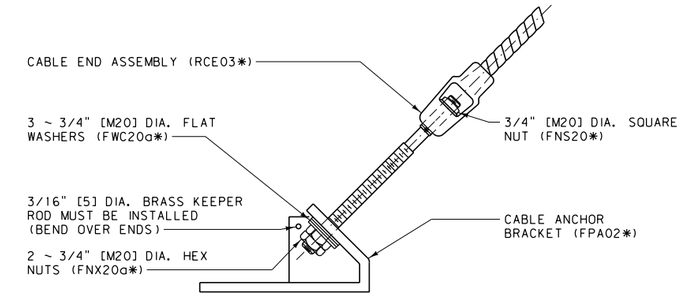

CABLE END ASSEMBLY TO ANCHOR BRACKET DETAIL

NOTES:

① INSTALL THE CONCRETE ANCHOR INTO THE EXCAVATION, AS DETAILED, SO THAT THE BOTTOM OF THE ANCHOR HAS A FULL AND EVEN BEARING ON THE SURFACE UNDER IT. BACKFILL AROUND THE CONCRETE ANCHOR PER SECTION 203.

② THE CONCRETE ANCHOR CAN BE PLACED AS ONE OR TWO PIECES. THIS DETAIL PRIMARILY SHOWS A TWO PIECE INSTALLATION. FOR ONE PIECE INSTALLATIONS, USE ALL THE SAME DIMENSIONS, LESS THE TAPERED KEYWAY AND THE ADDITIONAL REBAR, AS SHOWN.

③ IF LIFTING DEVICES ARE EMBEDDED INTO THE CONCRETE ANCHORS, ENSURE THAT THEY HAVE A SAFE WORKING LOAD OF 4 TONS [3.6 METRIC TONS]FOR THE ONE PIECE ANCHOR AND 2 TONS [1.8 METRIC TONS]EACH FOR EACH OF THE HALVES OF THE TWO PIECE ANCHOR UNIT.

④ USE CLASS GENERAL CONCRETE TO CONSTRUCT ANCHOR.

SEE DTL. DWG. NO. 606-80 FOR SCHEDULE ✱ OF GUARDRAIL HARDWARE.

TAPERED KEYWAY DETAIL

(TWO PIECE INSTALLATION)

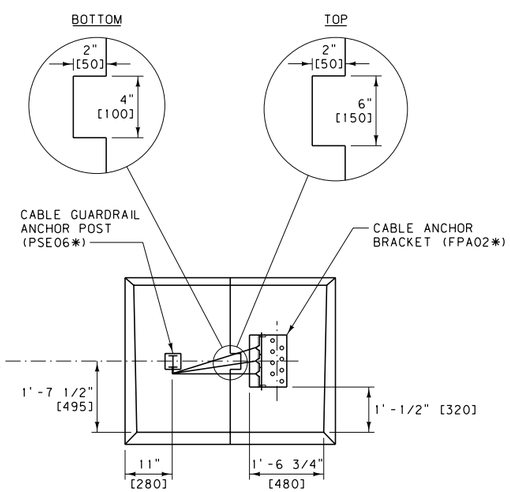

NOTE:

DIMENSIONS FOR LEFT AND RIGHT HAND ANCHOR UNITS ARE THE SAME, WITH THE POSITION OF THE ANCHOR POST AND ANCHOR BRACKET BEING THE ONLY DIFFERENCE.

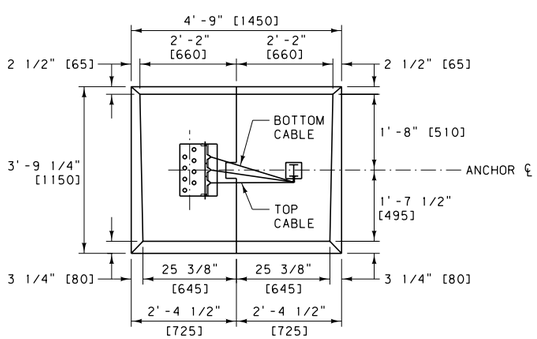

PLAN

(LEFT HAND ANCHOR UNIT)

PLAN

(RIGHT HAND ANCHOR UNIT)

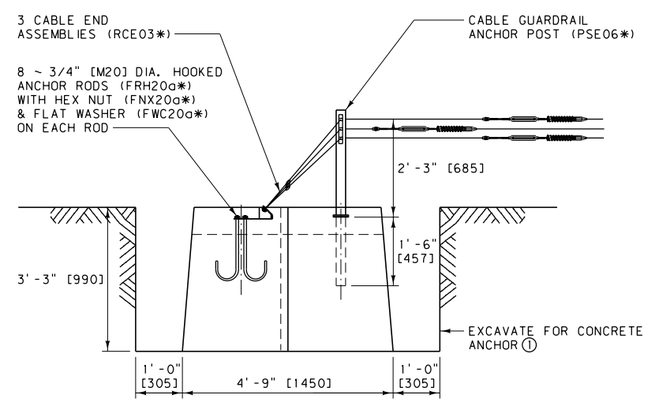

ELEVATION

(LEFT HAND ANCHOR UNIT)

UNITS SHOWN IN BRACKETS [] ARE METRIC AND ARE IN MILLIMETERS (mm) UNLESS OTHER UNITS ARE SHOWN.

DETAILED DRAWING	
REFERENCE STANDARD SPEC. SECTION 606	DWG. NO. 606-41
CABLE GUARDRAIL TERMINAL ANCHOR ASSEMBLY	
EFFECTIVE: SEPTEMBER 2014	

MDT MONTANA DEPARTMENT OF TRANSPORTATION

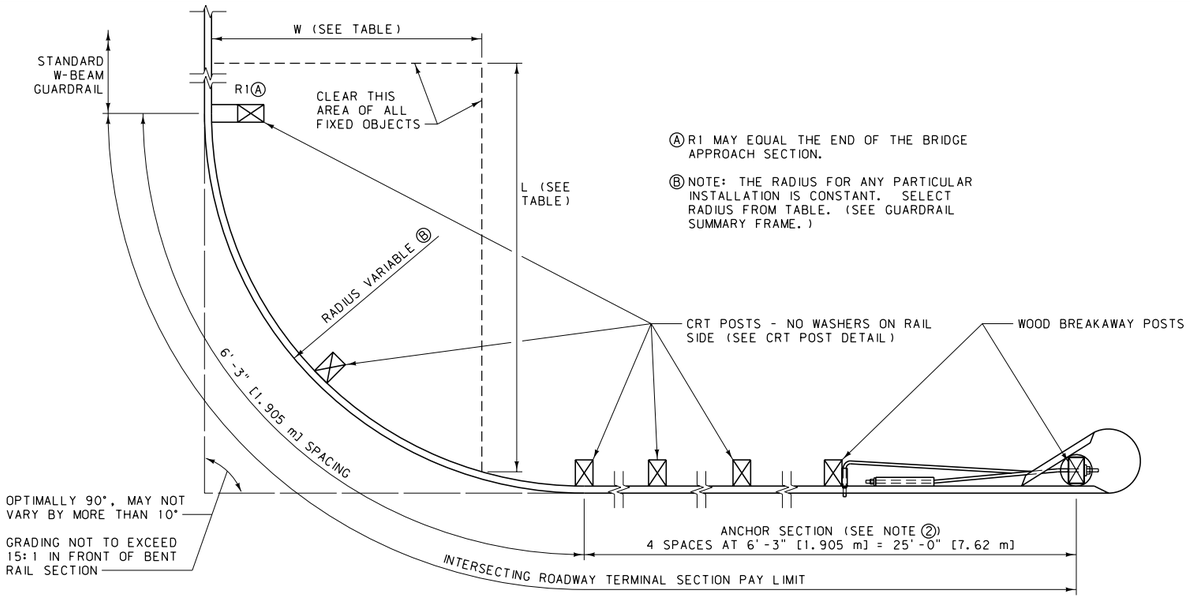

Ⓐ R1 MAY EQUAL THE END OF THE BRIDGE APPROACH SECTION.

Ⓑ NOTE: THE RADIUS FOR ANY PARTICULAR INSTALLATION IS CONSTANT. SELECT RADIUS FROM TABLE. (SEE GUARDRAIL SUMMARY FRAME.)

PLAN

RADIUS TABLE			
RADIUS	LENGTH OF BENT RAIL	L	W
8'	12.5'	25'	15'
16'	25.0'	30'	15'
24'	37.5'	40'	20'
32'	50.0'	50'	20'

METRIC RADIUS TABLE			
RADIUS	LENGTH OF BENT RAIL	L	W
2450 mm	3.81 m	7.6 m	4.6 m
4850 mm	7.62 m	9.1 m	4.6 m
7300 mm	11.43 m	12.2 m	6.1 m
9700 mm	15.24 m	15.2 m	6.1 m

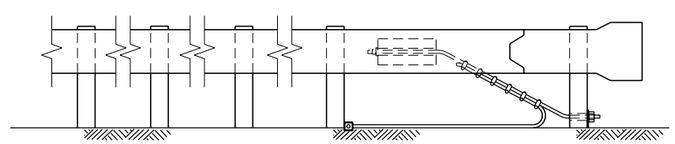

ELEVATION

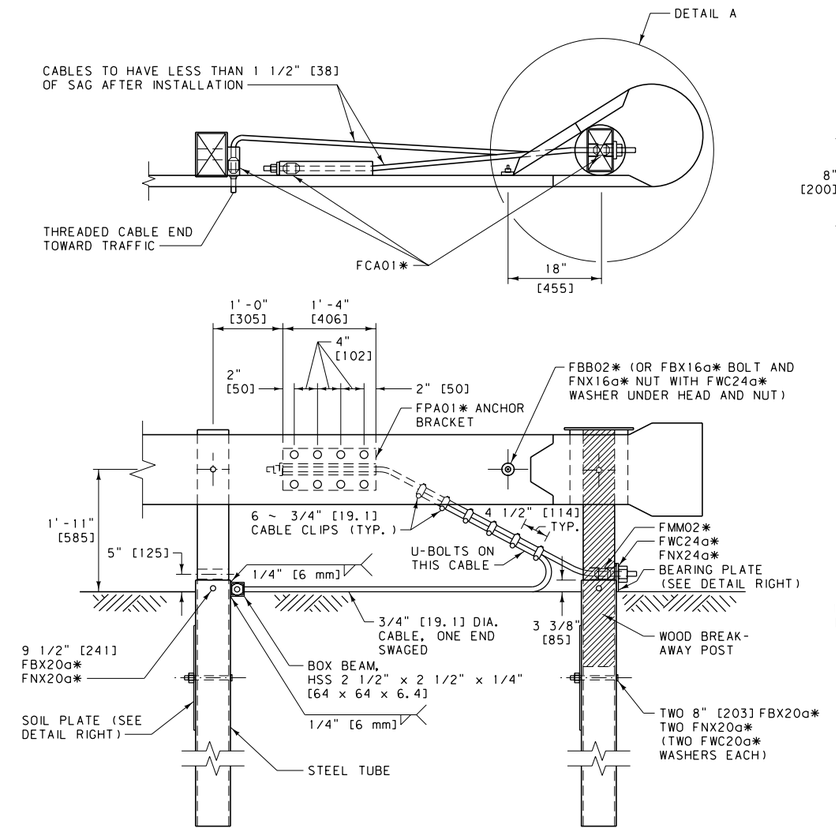

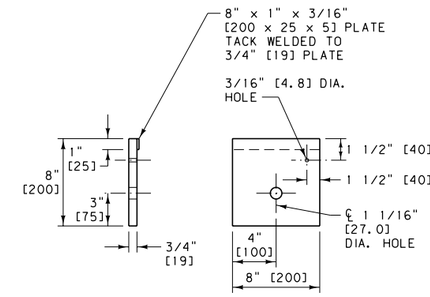

BEARING PLATE DETAIL

FPB01*

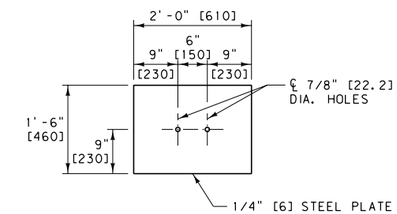

SOIL PLATE DETAIL

PLS03*

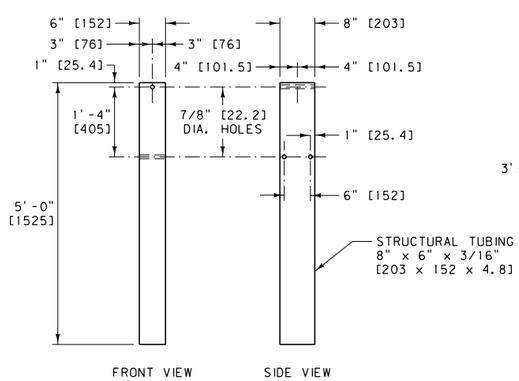

STEEL TUBE DETAILS

PTE05*

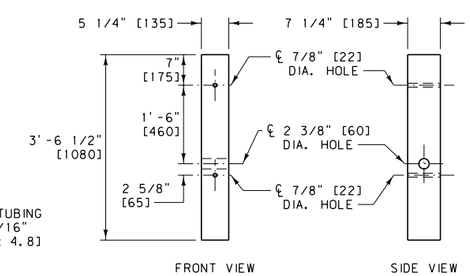

WOOD BREAKAWAY POST DETAILS

PDF01*

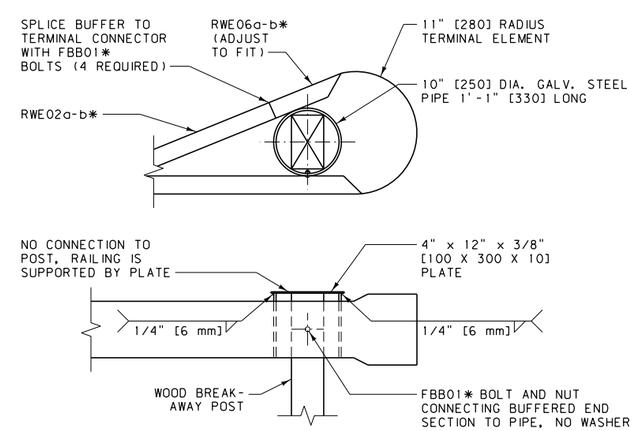

DETAIL A

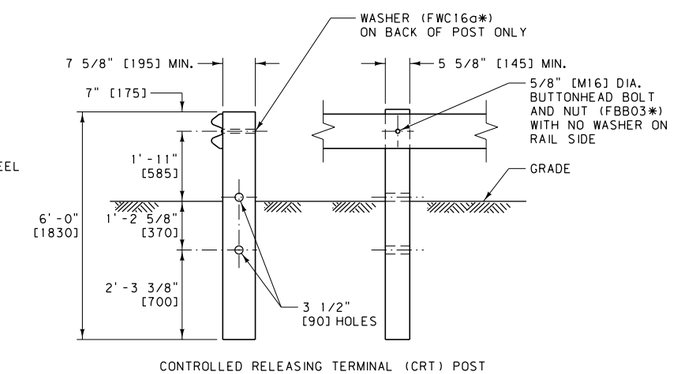

CRT POST DETAIL

PDE09*

NOTES:

① DO NOT INSTALL ON SLOPES STEEPER THAN 2:1.

② DO NOT OMIT OR SHORTEN ANCHOR SECTION.

③ SEE DTL. DWG. NO. 606-05A FOR GUARDRAIL WIDENING REQUIREMENTS.

* SEE DTL. DWG. NO. 606-80 FOR SCHEDULE OF GUARDRAIL HARDWARE.

UNITS SHOWN IN BRACKETS [] ARE METRIC AND ARE IN MILLIMETERS (mm) UNLESS OTHER UNITS ARE SHOWN.

DETAILED DRAWING	
REFERENCE STANDARD SPEC. SECTION 606	DWG. NO. 606-46
INTERSECTING ROADWAY TERMINAL SECTION	
EFFECTIVE: SEPTEMBER 2014	

MDT MONTANA DEPARTMENT OF TRANSPORTATION

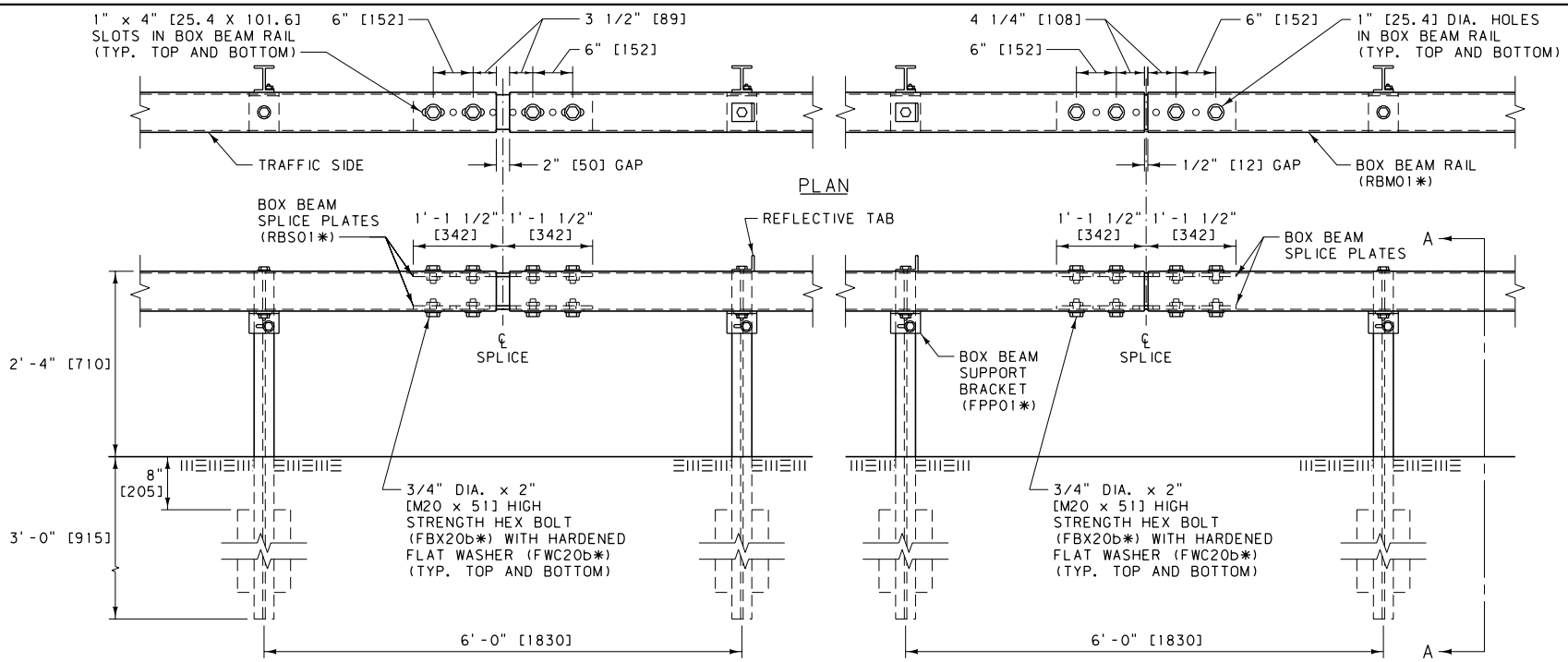

EXPANSION JOINT

ELEVATION

SPLICE DETAIL

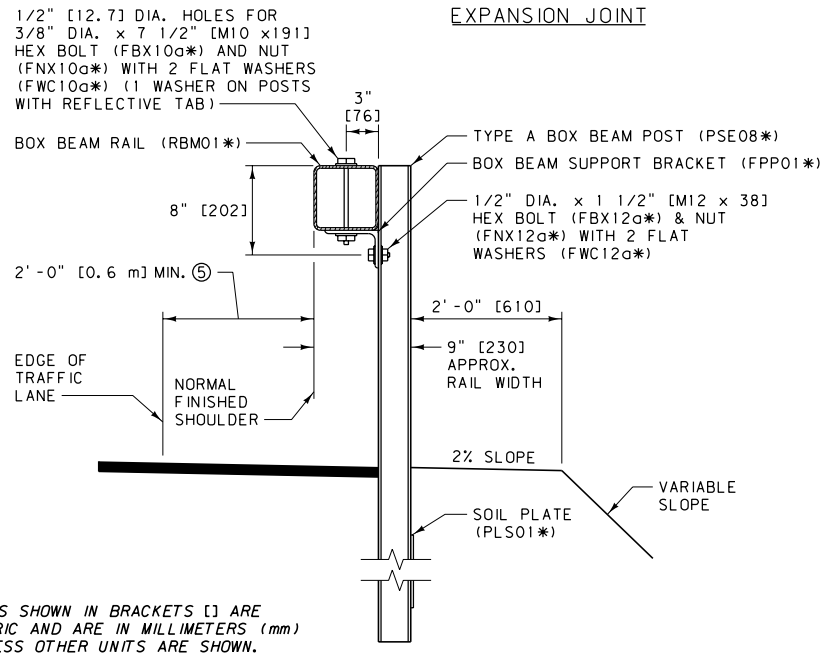

UNITS SHOWN IN BRACKETS [] ARE METRIC AND ARE IN MILLIMETERS (mm) UNLESS OTHER UNITS ARE SHOWN.

SECTION A-A

NOTES:

① USE BOX BEAM RAIL IN MINIMUM NOMINAL LENGTHS OF 18 FT. [5.49 m] UNLESS APPROVED BY THE PROJECT MANAGER.

② INSTALL EXPANSION JOINTS ON ALL BOX BEAM GUARDRAIL INSTALLATIONS GREATER THAN 300 FT. [90 m] IN LENGTH AT INTERVALS NOT TO EXCEED 500 FT. [150 m].

③ ATTACH REFLECTIVE TABS TO EVERY FOURTH POST (24 FT. [7.32 m] TYP.). ANGLE TABS SLIGHTLY TOWARDS TRAFFIC. DO NOT USE REFLECTIVE TABS ON WY-BET TERMINALS. WY-BET TERMINALS RECEIVE REFLECTIVE CHANNELS.

④ DO NOT INSTALL BOX BEAM GUARDRAIL FOR OBSTACLES WITHIN 5.8' [1.8 m] OF THE FACE OF THE RAIL.

⑤ WIDENING IS REQUIRED IF FINISHED SHOULDER IS LESS THAN 2'-0" [0.6 m] FROM THE TRAFFIC LANE.

⑥ PROVIDE SHOP BENT BOX BEAM RAIL FOR ROADWAY CURVATURE WITH RADII OF LESS THAN 715 FEET [218 m].

* SEE DTL. DWG. NO. 606-80 FOR SCHEDULE OF GUARDRAIL HARDWARE.

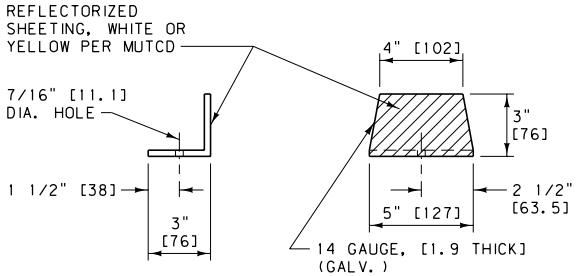

REFLECTIVE TAB

DETAILED DRAWING	
REFERENCE STANDARD SPEC. SECTION 606	DWG. NO. 606-50
BOX BEAM GUARDRAIL	
EFFECTIVE: SEPTEMBER 2014	

MDT MONTANA DEPARTMENT OF TRANSPORTATION

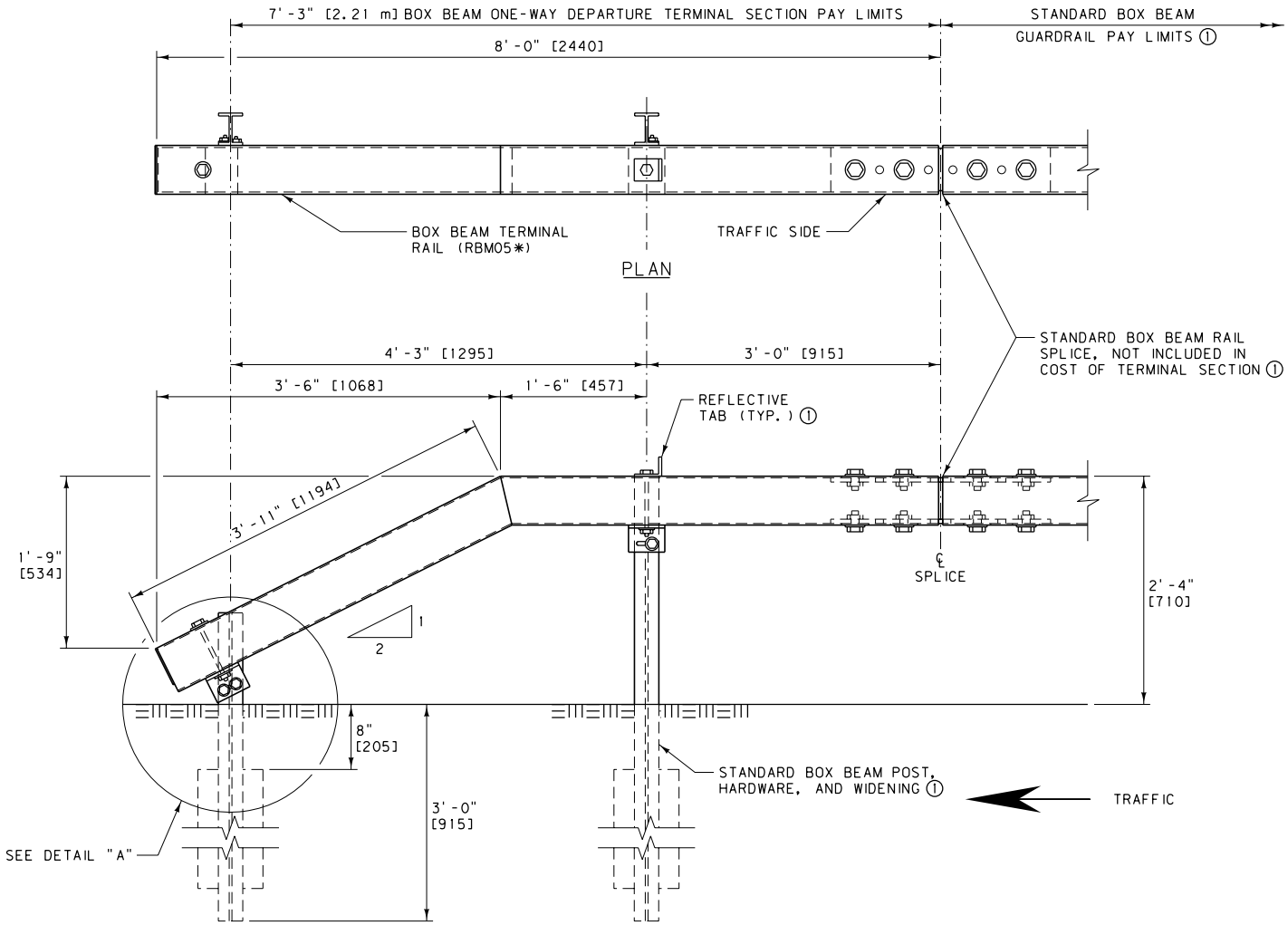

ELEVATION

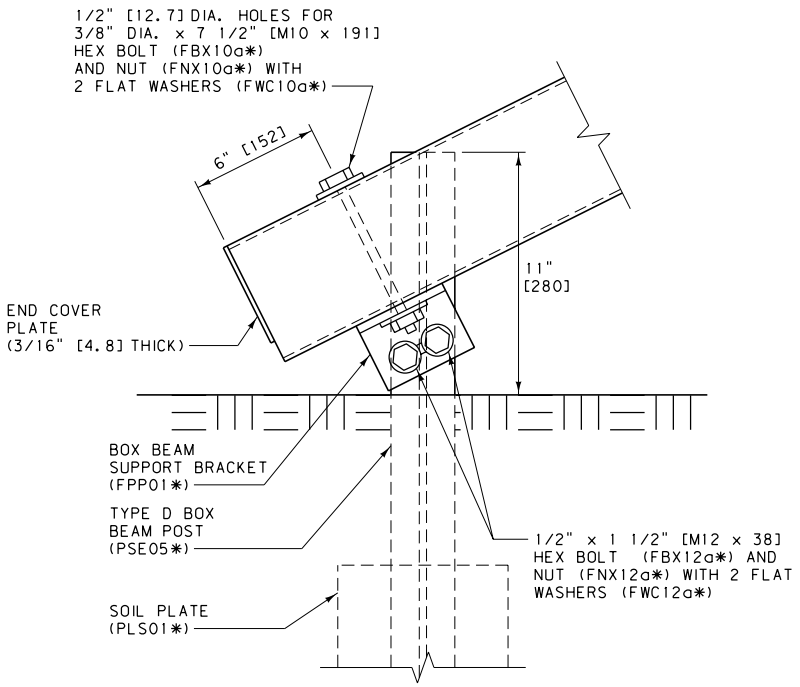

DETAIL "A"

NOTES:

① SEE DTL. DWG. NO. 606-50 FOR STANDARD BOX BEAM GUARDRAIL AND ASSOCIATED DETAILS.

* SEE DTL. DWG. NO. 606-80 FOR SCHEDULE OF GUARDRAIL HARDWARE.

UNITS SHOWN IN BRACKETS [] ARE METRIC AND ARE IN MILLIMETERS (mm) UNLESS OTHER UNITS ARE SHOWN.

DETAILED DRAWING	
REFERENCE STANDARD SPEC. SECTION 606	DWG. NO. 606-52
BOX BEAM ONE-WAY DEPARTURE TERMINAL SECTION	
EFFECTIVE: SEPTEMBER 2014	
MDT MONTANA DEPARTMENT OF TRANSPORTATION	

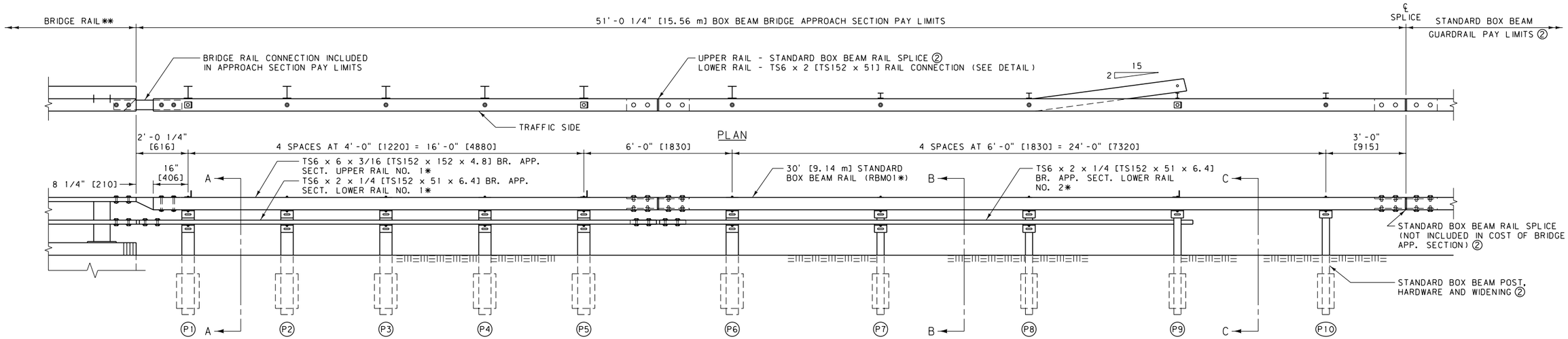

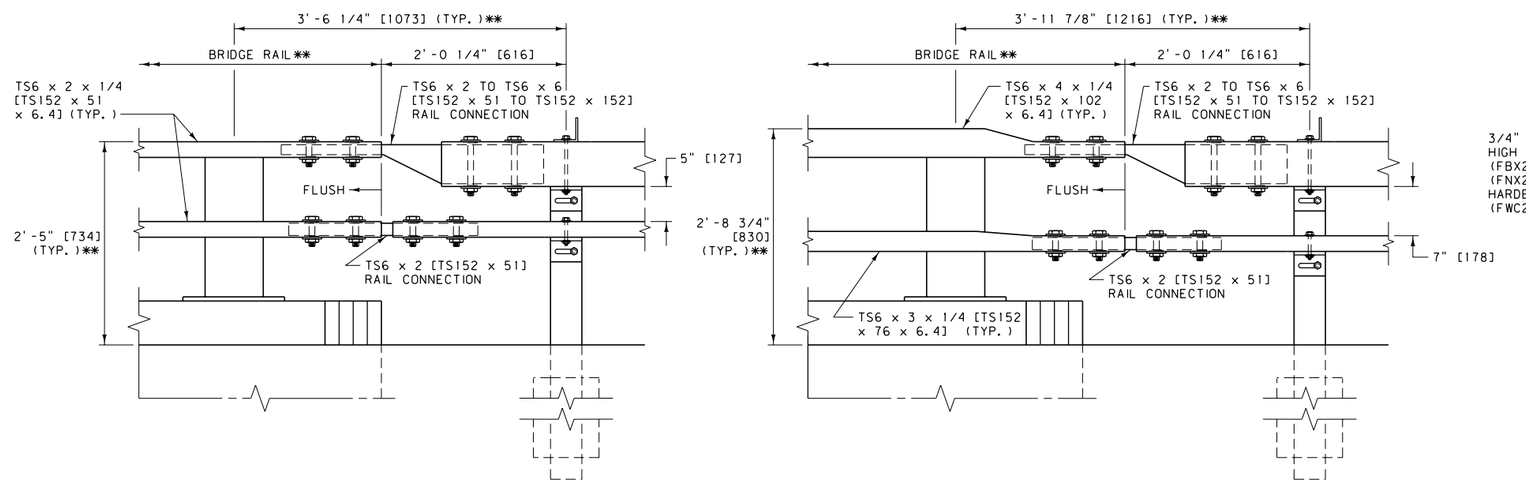

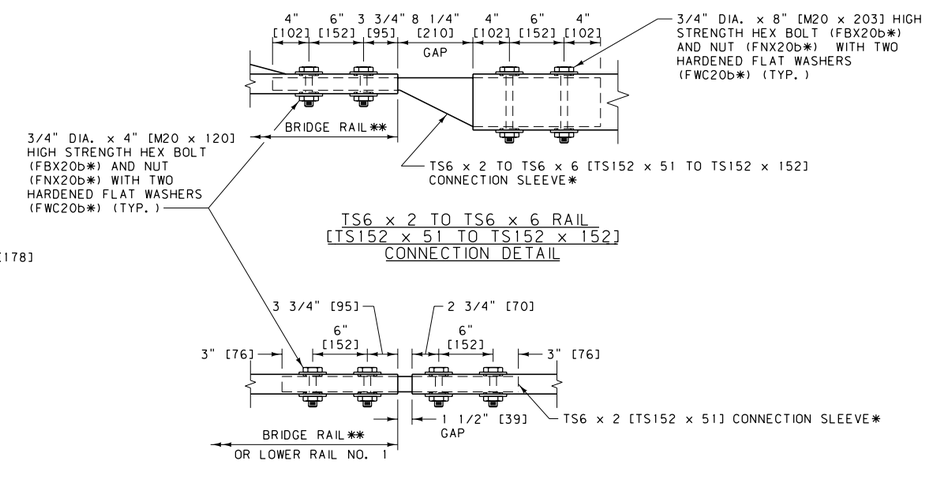

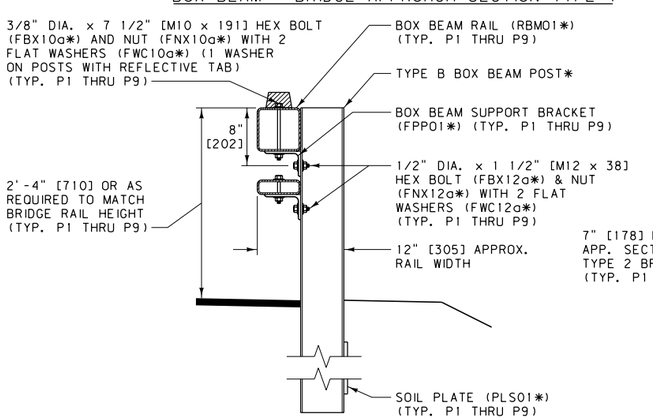

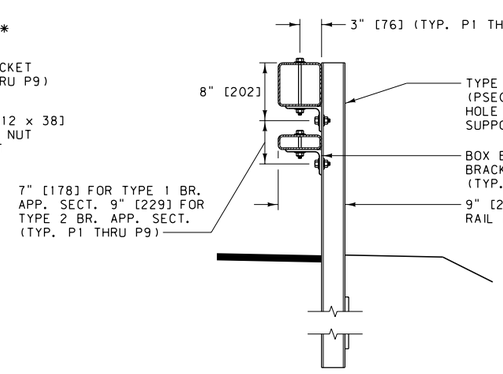

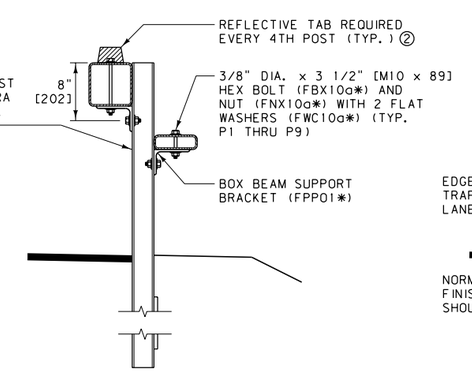

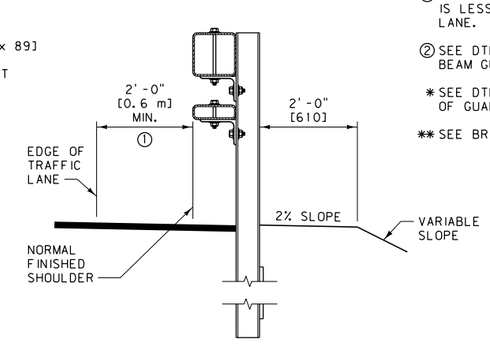

NOTES:

① WIDENING IS REQUIRED IF FINISHED SHOULDER IS LESS THAN 2'-0" [0.6 m] FROM THE TRAFFIC LANE.

② SEE DTL. DWG. NO. 606-50 FOR STANDARD BOX BEAM GUARDRAIL AND ASSOCIATED DETAILS.

* SEE DTL. DWG. NO. 606-80 FOR SCHEDULE OF GUARDRAIL HARDWARE.

** SEE BRIDGE PLANS.

UNITS SHOWN IN BRACKETS [] ARE METRIC AND ARE IN MILLIMETERS (mm) UNLESS OTHER UNITS ARE SHOWN.

DETAILED DRAWING	
REFERENCE STANDARD SPEC. SECTION 606	DWG. NO. 606-53
BOX BEAM BRIDGE APPROACH SECTION - TYPES 1 & 2	
EFFECTIVE: SEPTEMBER 2014	

MDT MONTANA DEPARTMENT OF TRANSPORTATION

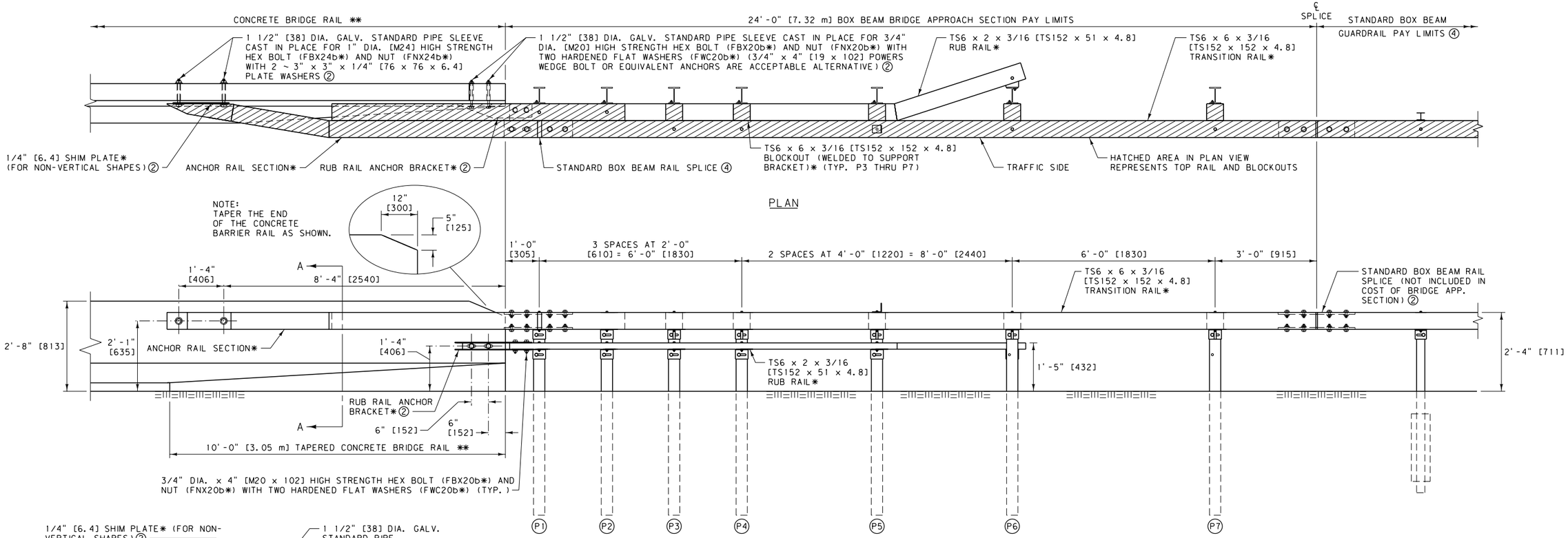

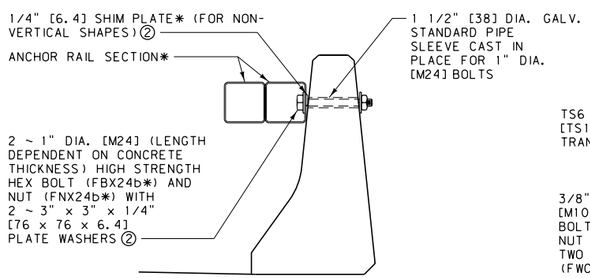

SECTION A-A

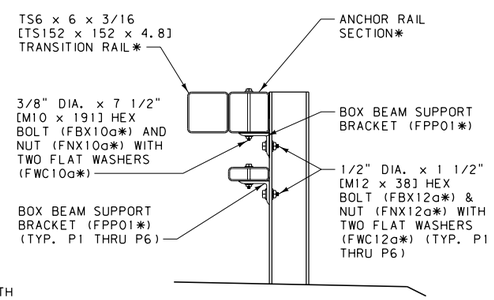

TYP. AT POSTS P1 & P2

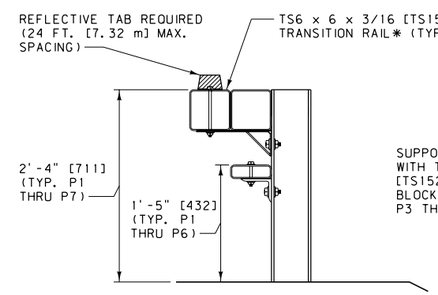

TYP. AT POSTS P3 THRU P5

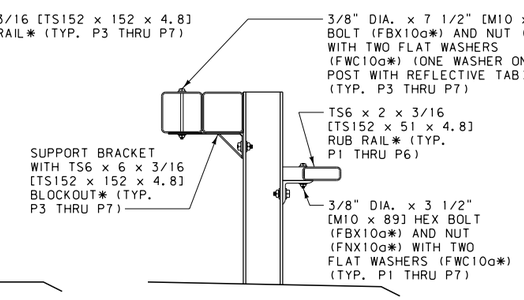

POST P6

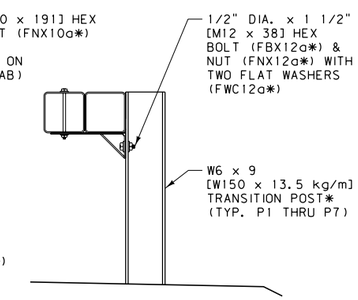

POST P7

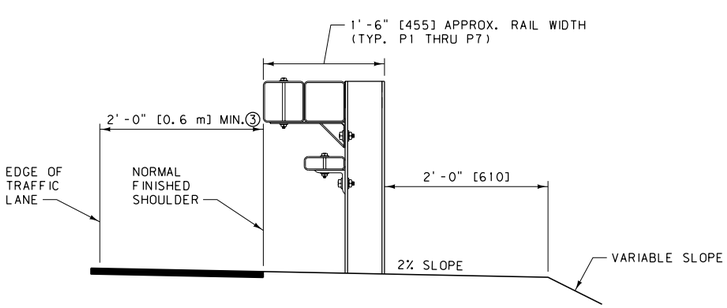

GUARDRAIL WIDENING DETAIL

NOTES:

① INCLUDE COST OF ENTIRE ANCHOR RAIL SECTION, ALONG WITH ALL HARDWARE NECESSARY FOR ATTACHMENT TO CONCRETE BRIDGE RAIL, IN COST OF BRIDGE APPROACH SECTION.

② THE LENGTHS OF CONCRETE ANCHOR BOLTS, TYPE OF RUB RAIL ANCHOR BRACKET AND THE NEED FOR THE 1/4" [6.4] SHIM PLATE IS DEPENDENT UPON THE SHAPE AND THE THICKNESS OF THE CONCRETE BRIDGE RAIL.

③ WIDENING IS REQUIRED IF FINISHED SHOULDER IS LESS THAN 2'-0" [0.6 m] FROM THE TRAFFIC LANE.

④ SEE DTL. DWG. NO. 606-50 FOR STANDARD BOX BEAM GUARDRAIL AND ASSOCIATED DETAILS.

* SEE DTL. DWG. NO. 606-80 FOR SCHEDULE OF GUARDRAIL HARDWARE.

** SEE BRIDGE PLANS.

UNITS SHOWN IN BRACKETS [] ARE METRIC AND ARE IN MILLMETERS (mm) UNLESS OTHER UNITS ARE SHOWN

DETAILED DRAWING	
REFERENCE STANDARD SPEC. SECTION 606	DWG. NO. 606-53A
BOX BEAM BRIDGE APPROACH SECTION- TYPE 3	
EFFECTIVE: SEPTEMBER 2014	

MDT MONTANA DEPARTMENT OF TRANSPORTATION

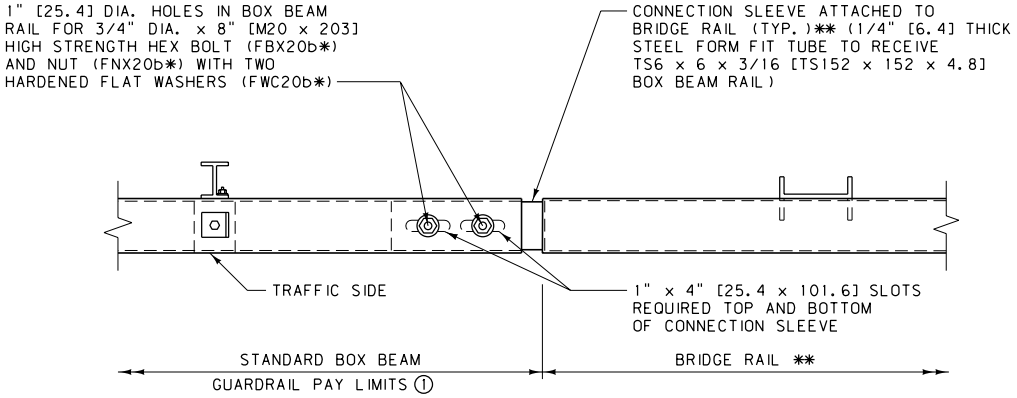

PLAN

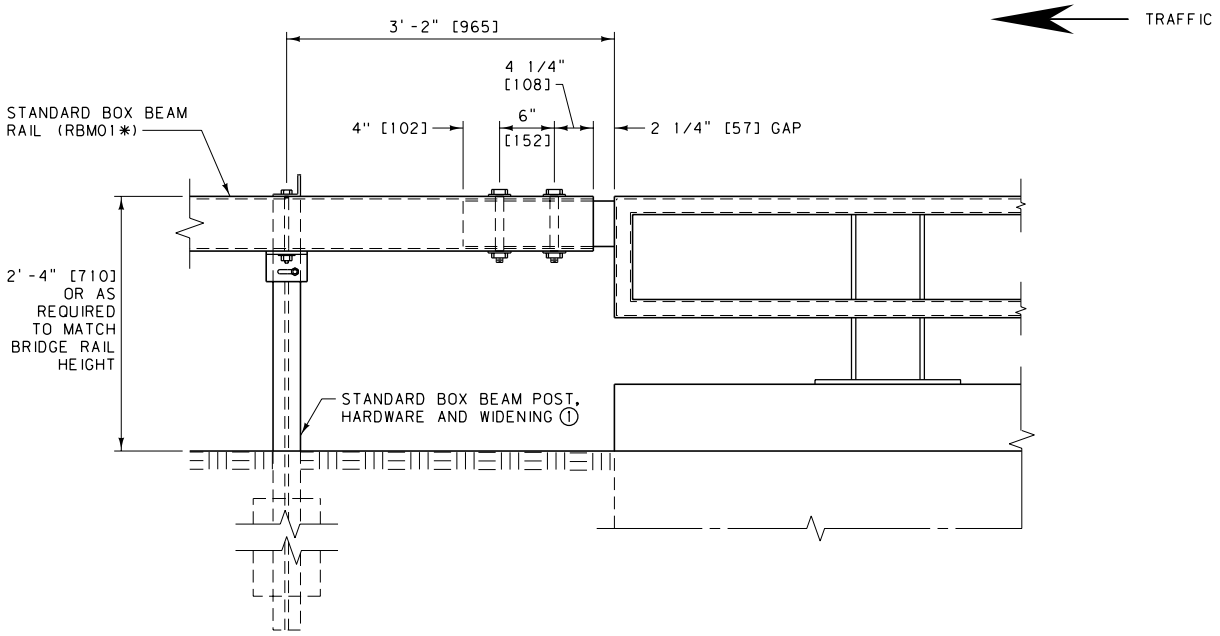

ELEVATION

NOTES:

1. SEE DTL. DWG. NO. 606-50 FOR STANDARD BOX BEAM GUARDRAIL AND ASSOCIATED DETAILS.
2. USE ON EXIT END OF ONE-WAY TRAFFIC BRIDGES ONLY.

* SEE DTL. DWG. NO. 606-80 FOR SCHEDULE OF GUARDRAIL HARDWARE.

** SEE BRIDGE PLANS FOR MORE DETAILED INFORMATION ON BRIDGE RAIL AND CONNECTION DETAILS.

UNITS SHOWN IN BRACKETS [] ARE METRIC AND ARE IN MILLIMETERS (mm) UNLESS OTHER UNITS ARE SHOWN.

DETAILED DRAWING	
REFERENCE STANDARD SPEC. SECTION 606	DWG. NO. 606-54
BOX BEAM ONE-WAY BRIDGE DEPARTURE SECTION	
EFFECTIVE: SEPTEMBER 2014	
MDT MONTANA DEPARTMENT OF TRANSPORTATION	

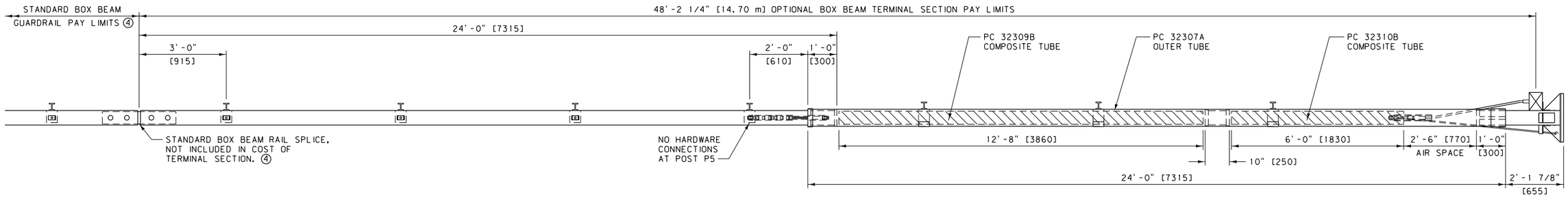

PLAN

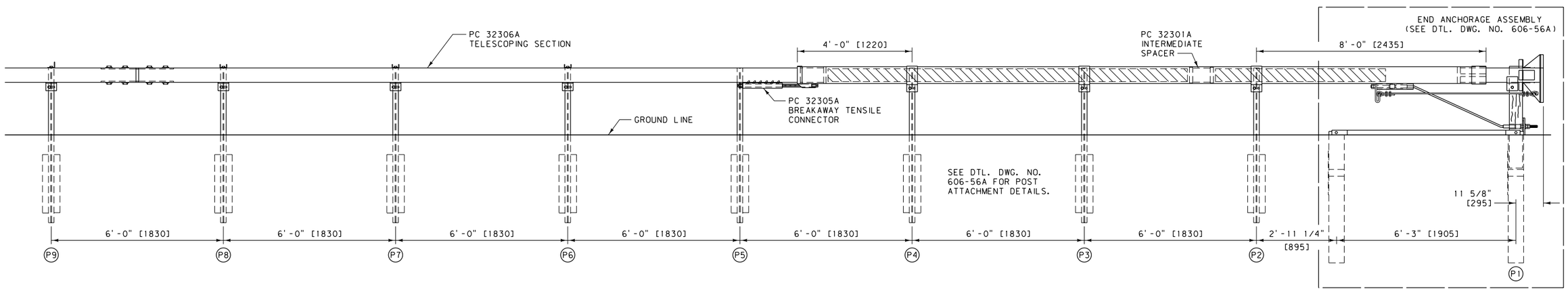

ELEVATION

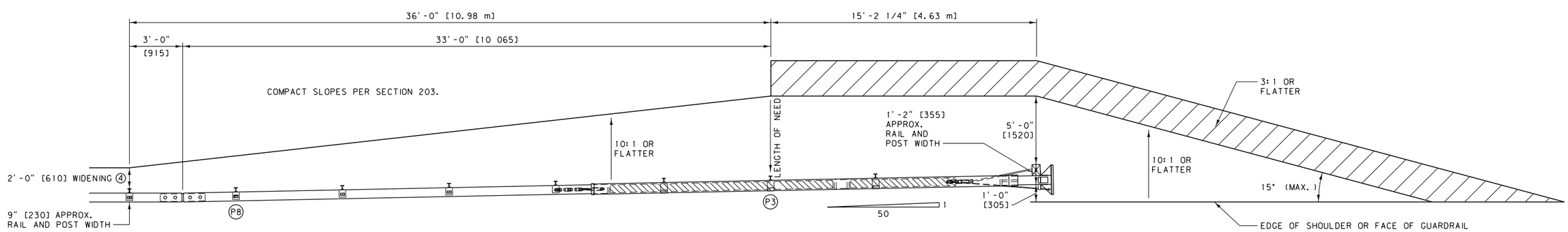

NOTES:

① PLACE A SELF-ADHESIVE OBJECT MARKER ON THE FACE OF THE NOSE ASSEMBLY, HAVING ALTERNATING RETRO-REFLECTIVE BLACK AND YELLOW STRIPES SLOPED DOWNWARD AT AN ANGLE OF 45° TOWARDS THE SIDE ON WHICH TRAFFIC IS TO PASS.

② FLARE THE END SECTION AWAY FROM TRAFFIC AT A RATE OF 50:1 FOR 50 FEET [15.24 m] (ILLUSTRATED). FLARES OF 50:1 FOR 100 FEET [30.48 m] MAY ALSO BE USED. THE FLARE MAY BE OMITTED ON ROADS WITH SHOULDERS GREATER THAN 2 FEET [0.6 m] IN WIDTH.

③ OBTAIN PROJECT MANAGER'S APPROVAL OF MANUFACTURER INSTALLATION OPTIONS WHEN SITE CONDITIONS PREVENT THE USE OF THE OPTION SHOWN ON THIS DETAIL.

④ SEE DTL. DWG. NO. 606-50 FOR STANDARD BOX BEAM GUARDRAIL AND ASSOCIATED DETAILS.

GUARDRAIL WIDENING

TRAFFIC

UNITS SHOWN IN BRACKETS [] ARE METRIC AND ARE IN MILLIMETERS (mm) UNLESS OTHER UNITS ARE SHOWN.

DETAILED DRAWING	
REFERENCE STANDARD SPEC. SECTION 606	DWG. NO. 606-55A
OPTIONAL BOX BEAM TERMINAL SECTION - WY-BET	
EFFECTIVE: SEPTEMBER 2014	

MDT MONTANA DEPARTMENT OF TRANSPORTATION

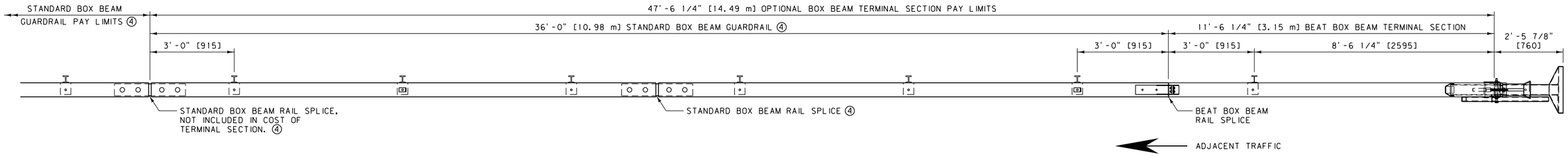

PLAN

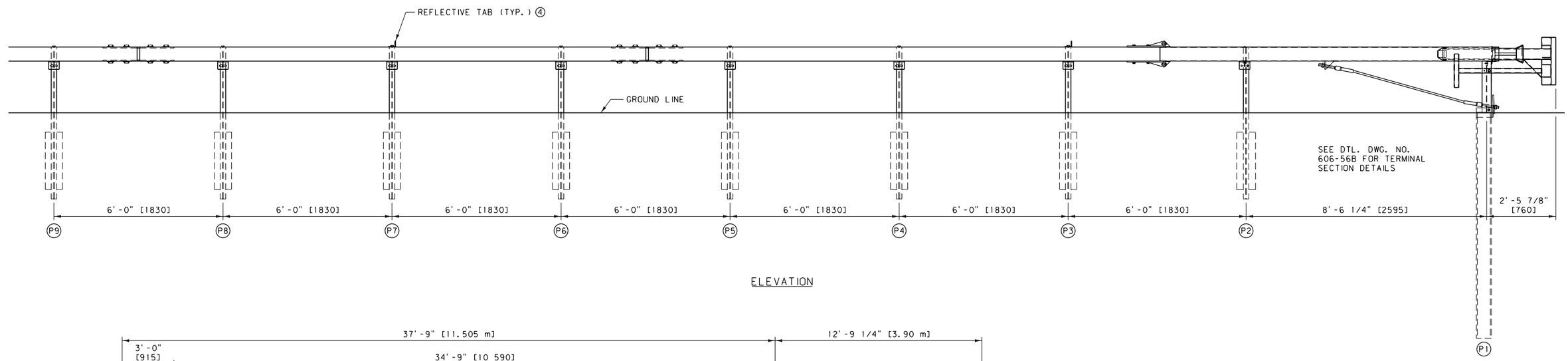

ELEVATION

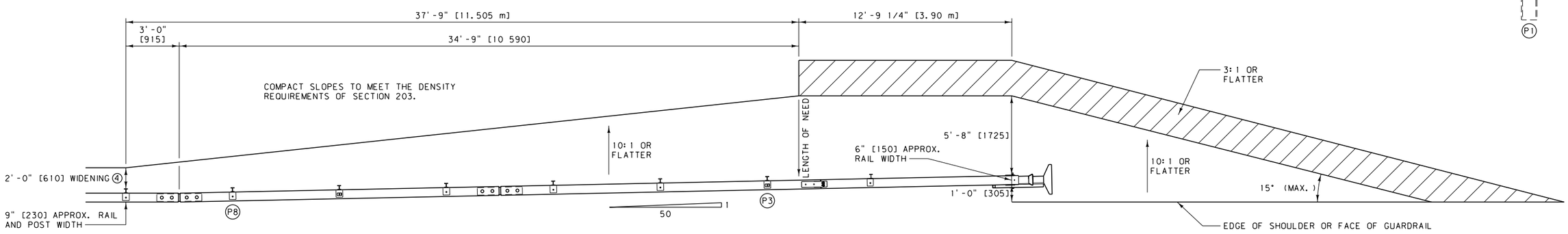

NOTES:

① PLACE A SELF-ADHESIVE OBJECT MARKER ON THE FACE OF THE NOSE ASSEMBLY, HAVING ALTERNATING RETRO-REFLECTIVE BLACK AND YELLOW STRIPES SLOPED DOWNWARD AT AN ANGLE OF 45° TOWARDS THE SIDE ON WHICH TRAFFIC IS TO PASS.

② FLARE THE END SECTION AWAY FROM TRAFFIC AT A RATE OF 50:1 FOR 50 FEET [15.24 m] (ILLUSTRATED). FLARES OF 50:1 FOR 100 FEET [30.48 m] MAY ALSO BE USED. THE FLARE MAY BE OMITTED ON ROADS WITH SHOULDERS GREATER THAN 2 FEET [0.6 m] IN WIDTH.

③ OBTAIN PROJECT MANAGER'S APPROVAL OF MANUFACTURER INSTALLATION OPTIONS WHEN SITE CONDITIONS PREVENT THE USE OF THE OPTION SHOWN ON THIS DETAIL.

④ SEE DTL. DWG. NO. 606-50 FOR STANDARD BOX BEAM GUARDRAIL AND ASSOCIATED DETAILS.

GUARDRAIL WIDENING

UNITS SHOWN IN BRACKETS [] ARE METRIC AND ARE IN MILLIMETERS (mm) UNLESS OTHER UNITS ARE SHOWN.

DETAILED DRAWING	
REFERENCE STANDARD SPEC. SECTION 606	DWG. NO. 606-55B
OPTIONAL BOX BEAM TERMINAL SECTION - BEAT	
EFFECTIVE: SEPTEMBER 2014	
MDT MONTANA DEPARTMENT OF TRANSPORTATION	

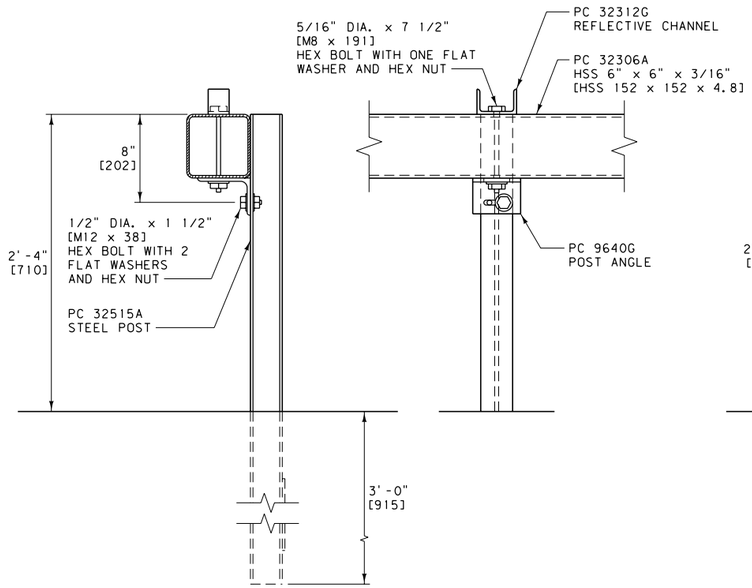

POST ATTACHMENT DETAIL

(TYP. AT POSTS P6, P7 AND P8)

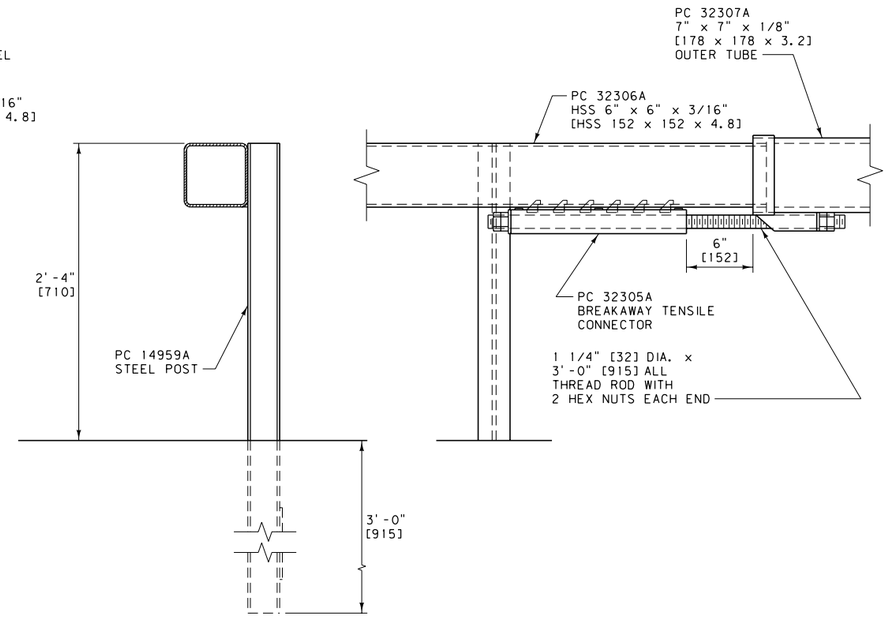

POST ATTACHMENT DETAIL

(POST P5)

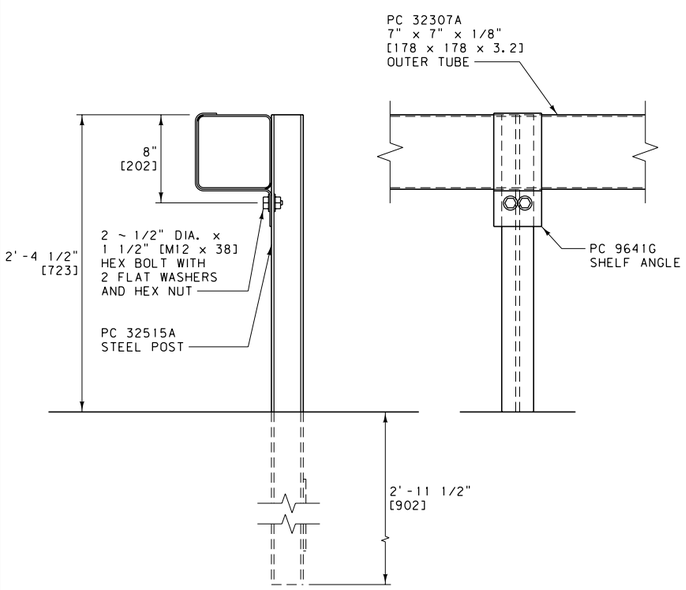

POST ATTACHMENT DETAIL

(TYP. AT POSTS P2, P3 AND P4)

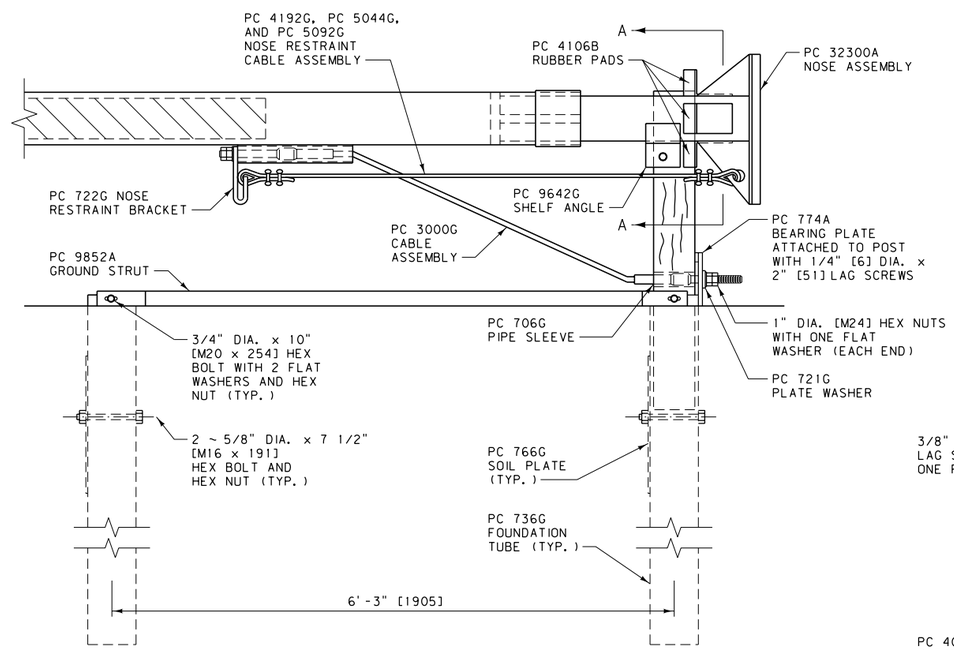

END ANCHORAGE ASSEMBLY

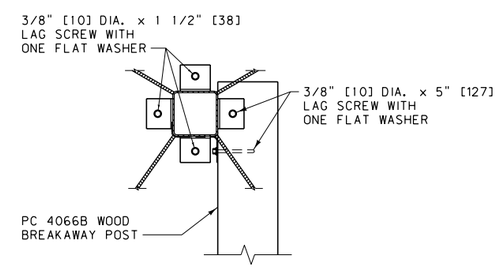

SECTION A-A

BILL OF MATERIAL

PC	QTY	DESCRIPTION	METRIC DESCRIPTION (mm)
706G	1	PIPE SLEEVE, 2" DIA. x 6"	PIPE SLEEVE, 50 DIA. x 150
721G	1	PLATE WASHER, 3" x 4" x 3/8"	PLATE WASHER, 75 x 100 x 10
722G	1	NOSE RESTRAINT CABLE BRACKET	NOSE RESTRAINT CABLE BRACKET
736G	2	STEEL TUBE, 6" x 8" x 5'-0"	STEEL TUBE, 152 x 203 x 1525
766G	2	SOIL PLATE, 18" x 24" x 1/4"	SOIL PLATE, 460 x 610 x 6
774A	1	SLOTTED BEARING PLATE	SLOTTED BEARING PLATE
3000G	1	CABLE ASSEMBLY	CABLE ASSEMBLY
3148G	2	1/4" DIA. x 2" LAG SCREW	6 DIA. x 51 LAG SCREW
3240G	3	5/16" DIA. ROUND WASHER	M8 ROUND WASHER
3245G	3	5/16" DIA. HEX NUT	M8 HEX NUT
3254G	3	3/8" DIA. x 1 1/2" LAG SCREW	10 DIA. x 38 LAG SCREW
3255G	5	3/8" DIA. ROUND WASHER	M10 ROUND WASHER
3264G	2	3/8" DIA. x 5" LAG SCREW	10 DIA. x 127 LAG SCREW
3350G	4	5/8" DIA. HEX NUT	M16 HEX NUT
3478G	4	5/8" DIA. x 7 1/2" HEX BOLT	M16 x 191 HEX BOLT
3700G	4	3/4" DIA. ROUND WASHER	M20 ROUND WASHER
3710G	2	3/4" DIA. HEX NUT	M20 HEX NUT
4044G	4	1 1/4" DIA. HEX NUT	32 DIA. HEX NUT
4066B	1	WOOD POST, 6" x 8" x 3'-6 1/2"	WOOD POST, 150 x 200 x 1080
4106B	3		RUBBER PAD, 38.1 x 88.9 x 101.6
4192G	4	1/4" CABLE CLAMP	6.4 CABLE CLAMP
4300G	18	1/2" DIA. ROUND WASHER	M12 ROUND WASHER
4303G	9	1/2" DIA. HEX NUT	M12 HEX NUT
4308G	9	1/2" DIA. x 1 1/2 " HEX BOLT	M12 x 38 HEX BOLT
4719G	2	3/4" DIA. x 10" HEX BOLT	M20 x 254 HEX BOLT
4902G	2	1" DIA. ROUND WASHER	M24 ROUND WASHER
4903G	4	1" DIA. HEX NUT	M24 HEX NUT
5044G	1	AIRCRAFT CABLE, 1/4" DIA. x 6'-10"	AIRCRAFT CABLE, 6.4 DIA. x 2080
5092G	2	1/4" AIRCRAFT CABLE THIMBLE	6.4 AIRCRAFT CABLE THIMBLE
5188G	3	5/16" DIA. x 7 1/2" HEX BOLT	M8 x 191 HEX BOLT
5423G	1	1 1/4" DIA. x 36" ALL THREAD ROD	32 DIA. x 915 ALL THREAD ROD
9640G	3	POST ANGLE, 5" x 3 1/2" x 3/8" x 4 1/2"	POST ANGLE, 127 x 89 x 9.5 x 115
9641G	3	SHELF ANGLE, 4 1/2" x 1/8" x 1'-7 1/8"	SHELF ANGLE, 115 x 3.2 x 486
9642G	1	SHELF ANGLE, 4 1/2" x 1/8" x 11 1/8"	SHELF ANGLE, 115 x 3.2 x 283
9852A	1	STRUT AND YOKE ASSEMBLY	STRUT AND YOKE ASSEMBLY
14959A	1	5'-4" STEEL POST	1625 STEEL POST
32300A	1	WY-BET NOSE ASSEMBLY	WY-BET NOSE ASSEMBLY
32301A	1	HSS 6" x 6" x 10" INTERMEDIATE SPACER	HSS 152 x 152 x 250 INTERMEDIATE SPACER
32305A	1	BREAKAWAY TENSILE CONNECTOR	BREAKAWAY TENSILE CONNECTOR
32306A	1	HSS 6" x 6" x 3/16" TELESCOPING SECTION	HSS 152 x 152 x 4.8 TELESCOPING SECTION
32307A	1	OUTER TUBE	OUTER TUBE
32309B	1	6" O.D. x 1/4" x 12'-7 7/8" COMPOSITE TUBE	152.4 O.D. x 6.4 x 3860 COMPOSITE TUBE
32310B	1	6" O.D. x 1/8" x 5'-11 7/8" COMPOSITE TUBE	152.4 O.D. x 3.2 x 1830 COMPOSITE TUBE
32312G	3	REFLECTOR CHANNEL	REFLECTOR CHANNEL
32515A	6	5'-4" STEEL POST	1625 STEEL POST

UNITS SHOWN IN BRACKETS [] ARE METRIC AND ARE IN MILLIMETERS (mm) UNLESS OTHER UNITS ARE SHOWN.

DETAILED DRAWING

REFERENCE STANDARD SPEC. SECTION 606

DWG. NO. 606-56A

WY-BET BOX
BEAM TERMINAL
SECTION DETAILS

EFFECTIVE: SEPTEMBER 2014

MDT MONTANA DEPARTMENT OF TRANSPORTATION

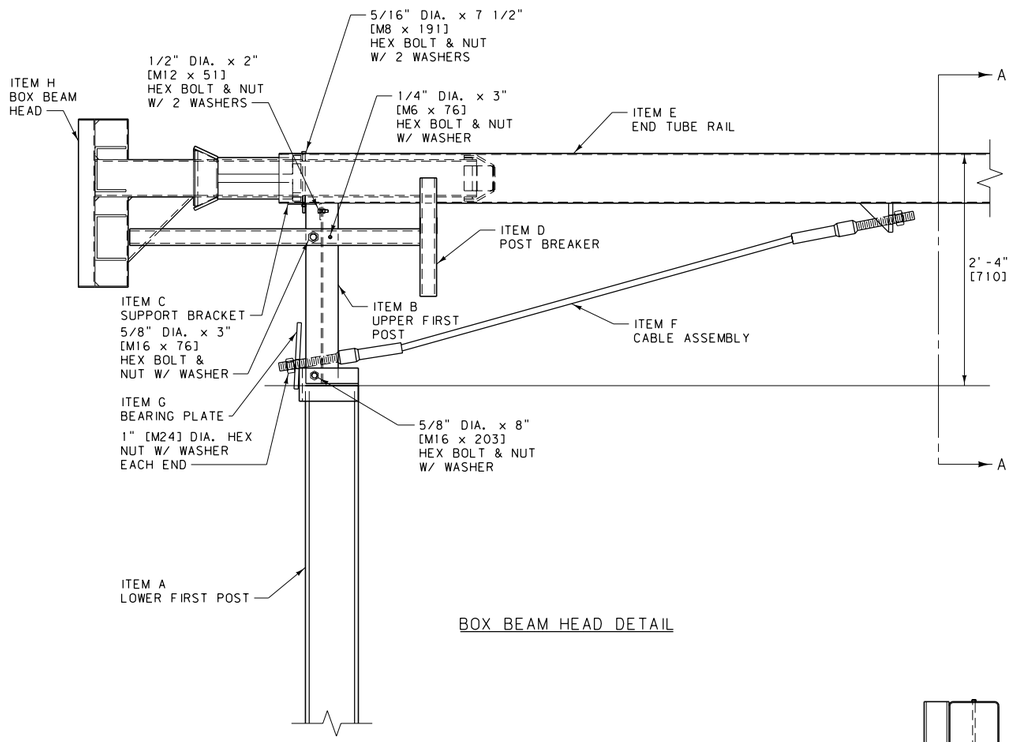

BOX BEAM HEAD DETAIL

BILL OF MATERIAL			
ITEM	QTY	DESCRIPTION	METRIC DESCRIPTION
A	1	LOWER FIRST POST, W6x15, 8'-0" LG.	LOWER FIRST POST, W152 x 22.3 kg/m, 2440 LG.
B	1	UPPER FIRST POST, W6x9, 1'-9 1/2" LG.	UPPER FIRST POST, W152 x 13.4 kg/m, 546 LG.
C	1	SUPPORT BRACKET, 10 GAUGE BENT PLATE	SUPPORT BRACKET, 10 GA. (3.5 THK.) BENT PLATE
D	1	POST BREAKER	POST BREAKER
E	1	END TUBE RAIL, TS 6" x 6" x 1/8" x 12'-0"	END TUBE RAIL, TS 152 x 152 x 3.2 x 3660
F	1	CABLE ASSEMBLY	CABLE ASSEMBLY
G	1	BEARING PLATE	BEARING PLATE
H	1	BOX BEAM HEAD	BOX BEAM HEAD
I	1	RAIL SUPPORT BRACKET, L 5" x 3 1/2" x 3/8" x 4 1/2"	RAIL SUPPORT BRACKET, L 127 x 89 x 9.5 x 115
J	1	BOX BEAM POST W/ SOIL PLATE	BOX BEAM POST W/ SOIL PLATE
K	2	END TUBE SECTION TIE PLATE	END TUBE SECTION TIE PLATE
a	2	5/16" DIA. x 7 1/2" HEX BOLT (GRADE 5)	M8 x 191 HEX BOLT (GRADE 5)
b	1	1/4" DIA. x 3" HEX BOLT (GRADE 2)	M6 x 76 HEX BOLT (GRADE 2)
c	2	1/2" DIA. x 2" HEX BOLT (GRADE 2)	M12 x 51 HEX BOLT (GRADE 2)
d	8	5/8" DIA. x 2" HEX BOLT (GRADE 5)	M16 x 51 HEX BOLT (GRADE 5)
e	1	5/8" DIA. x 8" HEX BOLT (GRADE 5)	M16 x 203 HEX BOLT (GRADE 5)
f	1	5/8" DIA. x 3" HEX BOLT (GRADE 5)	M16 x 76 HEX BOLT (GRADE 5)
g	2	5/16" DIA. HEX NUT	M8 HEX NUT
h	1	1/4" DIA. HEX NUT	M6 HEX NUT
j	2	1/2" DIA. HEX NUT	M12 HEX NUT
k	14	5/8" DIA. HEX NUT	M16 HEX NUT
n	2	1" DIA. ANCHOR CABLE HEX NUT	M24 ANCHOR CABLE HEX NUT
p	4	5/16" DIA. WASHER	M8 WASHER
q	1	1/4" DIA. WASHER	M6 WASHER
r	3	1/2" DIA. WASHER	M12 WASHER
s	10	5/8" DIA. WASHER	M16 WASHER
u	2	1" DIA. ANCHOR CABLE WASHER	M24 ANCHOR CABLE WASHER

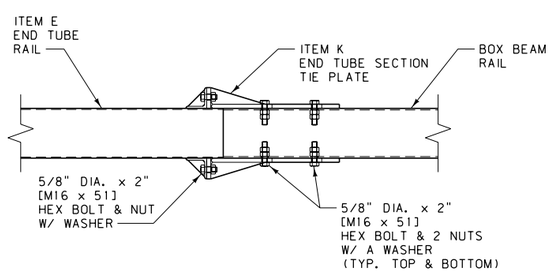

FIRST RAIL TIE DETAIL

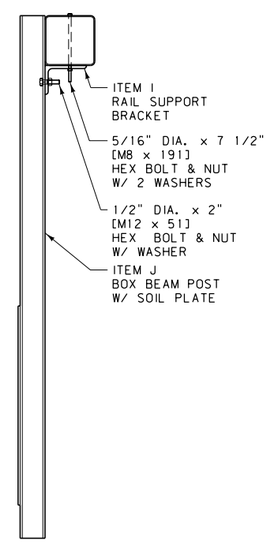

SECTION "A-A"

NOTES:

1. BEAT TERMINAL SECTION TO INCLUDE 36'-0" [10.98 m] OF BOX BEAM GUARDRAIL AS SHOWN ON DTL. DWG. NO. 606-55B.
2. PLACE POST BREAKER ON TRAFFIC SIDE OF FIRST POST.

UNITS SHOWN IN BRACKETS [] ARE METRIC AND ARE IN MILLIMETERS (mm) UNLESS OTHER UNITS ARE SHOWN.

DETAILED DRAWING

REFERENCE
STANDARD SPEC.
SECTION 606

DWG. NO.
606-56B

BEAT
BOX BEAM TERMINAL
SECTION DETAILS

EFFECTIVE: SEPTEMBER 2014

MDT MONTANA DEPARTMENT OF TRANSPORTATION

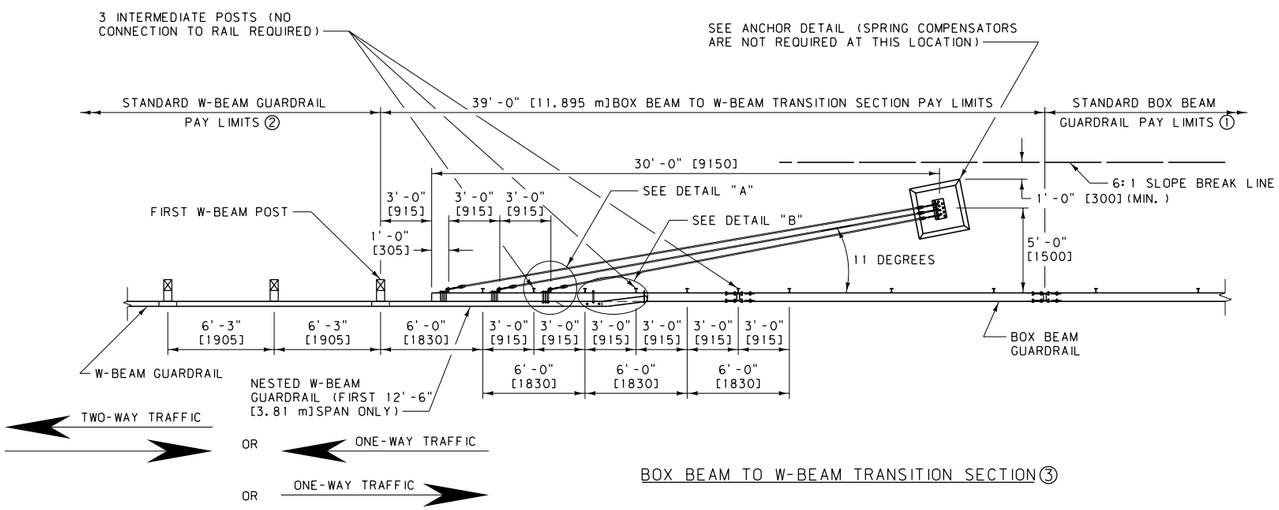

BOX BEAM TO W-BEAM TRANSITION SECTION ③

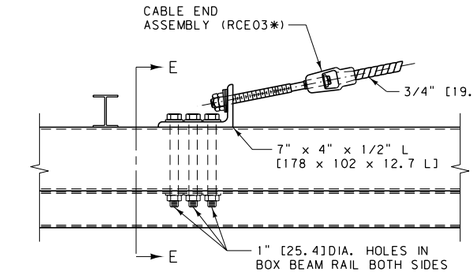

DETAIL A
PLAN

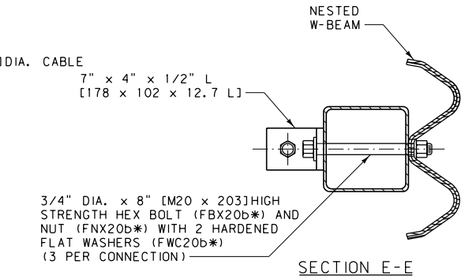

SECTION E-E

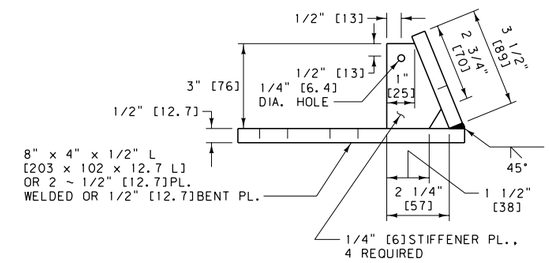

SECTION F-F

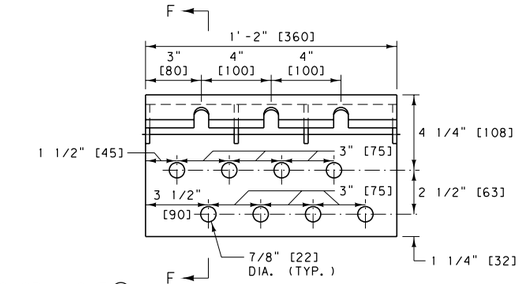

ANCHOR ANGLE ④ DETAIL

PLAN

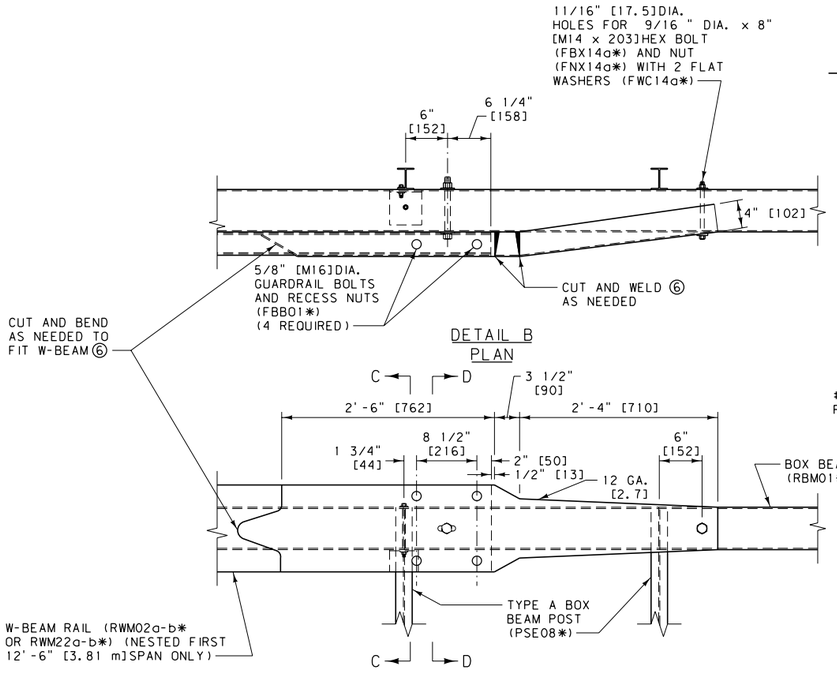

DETAIL B
PLAN

DETAIL B
ELEVATION

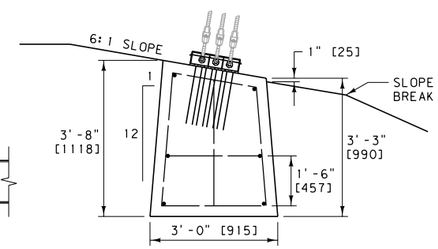

SECTION A-A

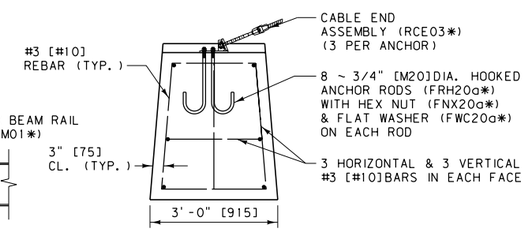

SECTION B-B

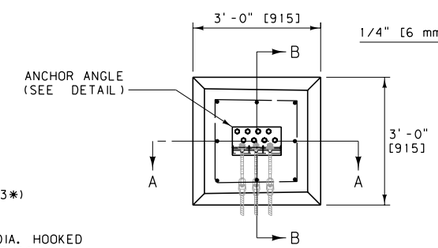

ANCHOR DETAIL ⑤
PLAN

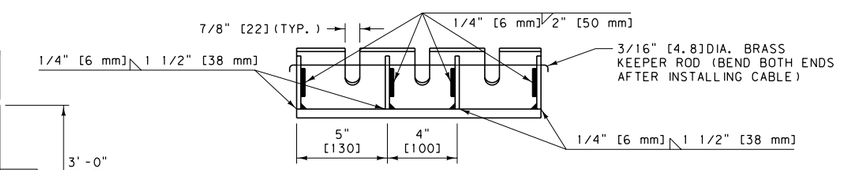

ELEVATION

NOTES:

① SEE DTL. DWG. NO. 606-50 FOR STANDARD BOX BEAM GUARDRAIL AND ASSOCIATED DETAILS.

② SEE DTL. DWG. NO. 606-05A AND 606-05B FOR STANDARD W-BEAM GUARDRAIL AND ASSOCIATED DETAILS.

③ MANUFACTURE ANCHOR ANGLES USING AASHTO M 270 [270M]GRADE 36 [250]STEEL MEETING SECTION 711. WELD PER SECTION 711.

④ GALVANIZE ANCHOR ANGLES PER SECTION 711. NO PUNCHING, DRILLING, WELDING OR CUTTING IS PERMITTED ON COMPONENTS AFTER GALVANIZING.

⑤ USE CLASS GENERAL CONCRETE TO CONSTRUCT ANCHOR.

⑥ PAINT ANY AREAS WHERE GALVANIZING IS BROKEN OR METAL IS BARE ON W-BEAM OR BOX BEAM RAIL WITH ONE COAT OF ZINC RICH PAINT AND TWO COATS OF ALUMINUM PAINT PER SECTION 710.

⑦ LAP ALL W-BEAM SPLICES IN THE DIRECTION OF ADJACENT TRAFFIC.

* SEE DTL. DWG. NO. 606-80 FOR SCHEDULE OF GUARDRAIL HARDWARE.

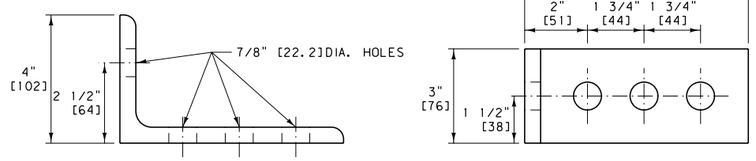

7" x 4" x 1/2" L [178 x 102 x 12.7]
DETAIL

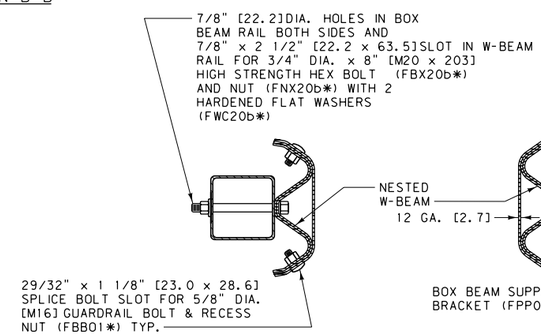

SECTION D-D

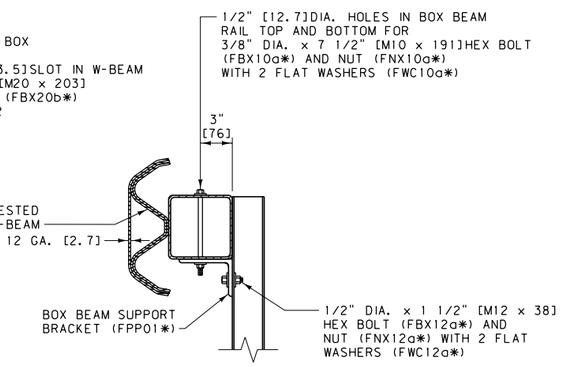

SECTION C-C

UNITS SHOWN IN BRACKETS [] ARE METRIC AND ARE IN MILLIMETERS (mm) UNLESS OTHER UNITS ARE SHOWN.

DETAILED DRAWING	
REFERENCE STANDARD SPEC. SECTION 606, 710, 711	DWG. NO. 606-58
BOX BEAM TO W-BEAM TRANSITION SECTION	
EFFECTIVE: SEPTEMBER 2014	

MDT MONTANA DEPARTMENT OF TRANSPORTATION

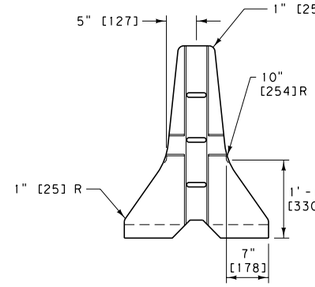

END VIEW

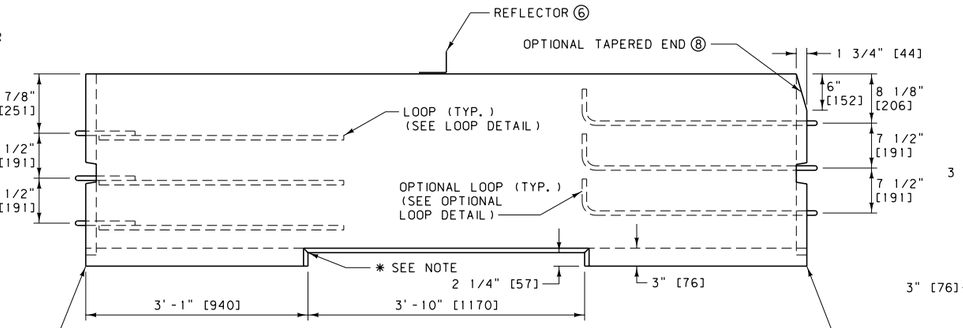

ELEVATION VIEW

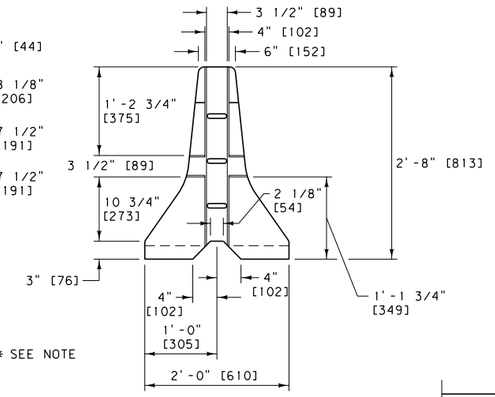

END VIEW

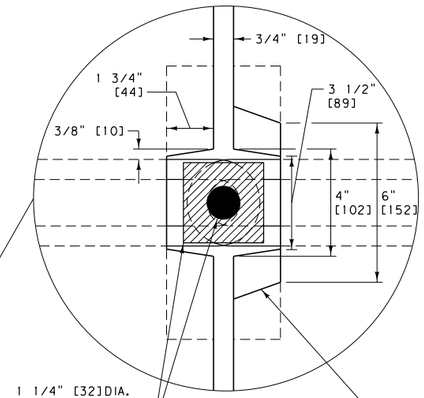

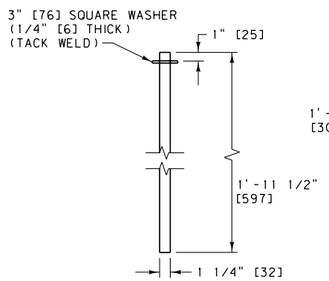

CONNECTING PIN DETAIL⑨

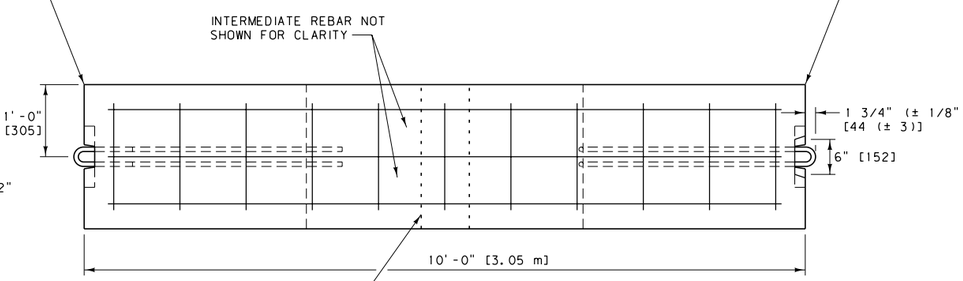

PLAN VIEW

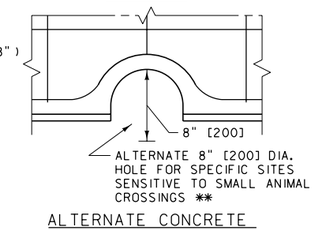

ALTERNATE CONCRETE BARRIER RAIL DETAIL

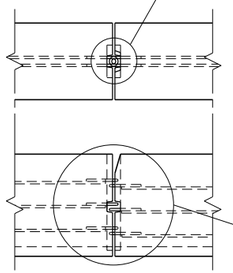

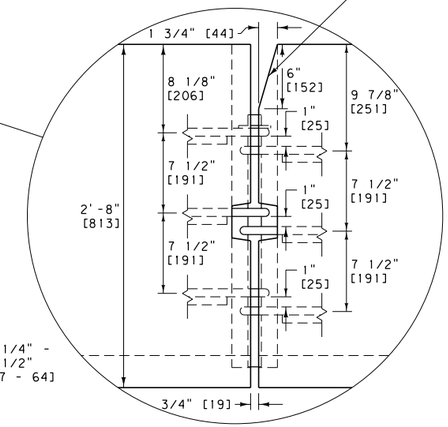

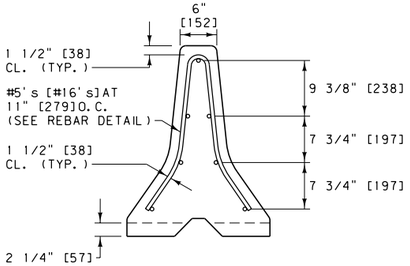

END VIEW

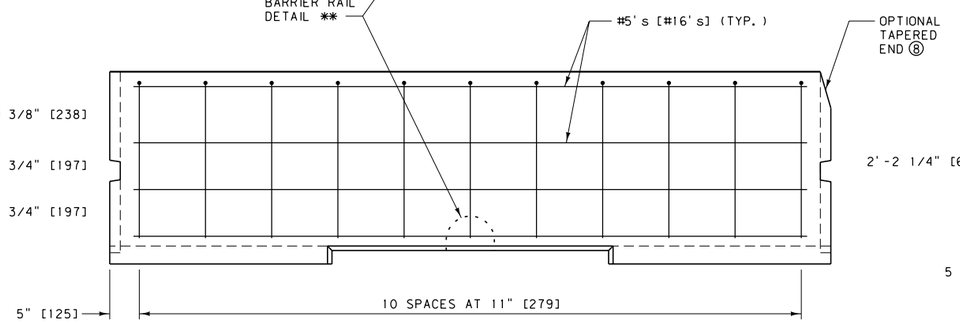

ELEVATION VIEW

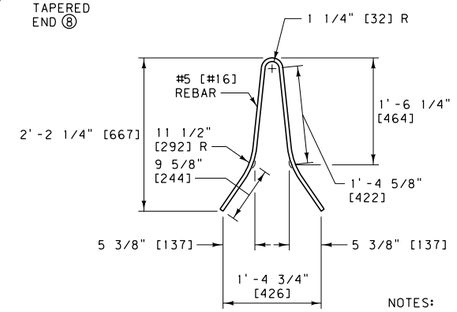

REBAR DETAIL

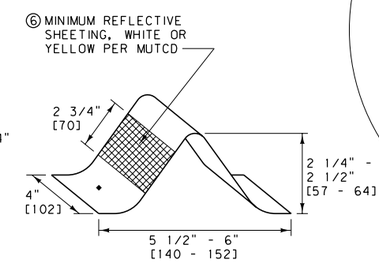

REFLECTOR
(SEE NOTES)

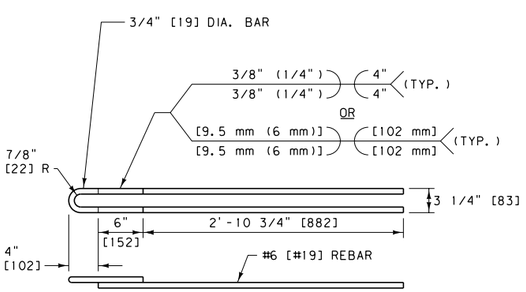

LOOP DETAIL⑨

LOOP FABRICATION REQUIREMENTS:

1. USE REINFORCING STEEL CONFORMING TO ASTM A 706 [706M], GRADE 60 [420] FOR REBAR BEING WELDED TO LOOPS.
2. LOOP ENDS CONSIST OF SMOOTH ROUND BARS CONFORMING TO AASHTO M 270 [270M], GRADE 36 [250].
3. COLD BEND THE LOOPS BY USING A JIG THAT WILL PRODUCE AN ACCURATE RADIUS WITHOUT MARRING THE BAR. DO NOT HEAT THE BAR TO FACILITATE BENDING.
4. WELD REBAR TO LOOPS MEETING SECTION 624 REQUIREMENTS USING 1/8" [3 mm] DIA. E8018 ROD. DO NOT TACK WELD THE PIECES TOGETHER PRIOR TO WELDING.
5. NO ADDITIONAL WELDING IS PERMITTED ON THE SMOOTH ROUND BARS OR REINFORCING STEEL.

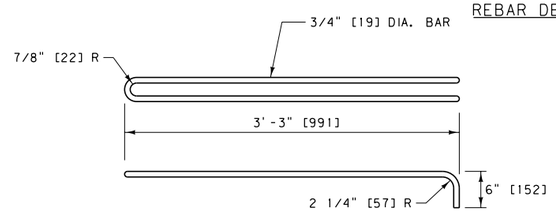

OPTIONAL LOOP DETAIL⑨

OPTIONAL LOOP FABRICATION REQUIREMENTS:

1. USE CONTINUOUS SMOOTH ROUND BARS CONFORMING TO AASHTO M 270 [270M], GRADE 36 [250] TO FABRICATE THE OPTIONAL LOOPS.
2. COLD BEND THE LOOPS BY USING A JIG THAT WILL PRODUCE AN ACCURATE RADIUS WITHOUT MARRING THE BAR. DO NOT HEAT THE BAR TO FACILITATE BENDING.
3. NO WELDING IS PERMITTED ON THE SMOOTH ROUND BARS OR REINFORCING STEEL.

NOTES:

① USE CLASS DECK CONCRETE OR EQUIVALENT.

② REINFORCING STEEL CONSISTS OF DEFORMED BARS CONFORMING TO AASHTO M 31 [31M], GRADE 60 [420].

③ CONNECT EACH 10' [3.05 m] SECTION WITH CONNECTING PINS AS DETAILED AND CONFORMING TO AASHTO M 270 [270M], GRADE 36 [250] OR BETTER. CONNECTING PINS NEED NOT BE PAINTED.

④ CUTOUTS ON ENDS OF EACH SECTION ARE SHOWN WITH SLIGHT TAPER TO FACILITATE FORM REMOVAL. RECTANGULAR CUTOUTS ARE ACCEPTABLE.

⑤ THE CONTRACTOR IS RESPONSIBLE FOR THE PROPER FIT-UP OF THE PRECAST CONCRETE BARRIER RAIL. ASSEMBLE AND PIN SUFFICIENT NUMBER OF PRECAST SECTIONS IN THE FABRICATIONS PLANT TO DETERMINE THAT PROPER FIT-UP CAN BE MAINTAINED ON ALL ROADWAY ALIGNMENT, CURVES AS WELL AS ON TANGENT. THIS IS TO BE DETERMINED EARLY IN FABRICATION.

⑥ ATTACH REFLECTORS TO RAIL EVERY 30' [9.15 m]. USE ALIMUNUM ALLOY MEETING THE ALUMINUM ASSOCIATION ALLOY AA5052-H32. FOLLOW THE MANUFACTURER'S SPECIFICATIONS FOR ADHESIVE MOUNTING. IN NARROW PAVED (FLUSH) MEDIAN APPLICATIONS. REFLECTORIZE BOTH SIDES.

⑦ DO NOT INSTALL UNANCHORED CONCRETE BARRIER RAIL FOR OBSTACLES WITHIN 6.5' [2.5 m] OF THE BASE (TRAFFIC SIDE) OF THE RAIL. SEE DTL. DWN NO. 606-62 FOR CONCRETE BARRIER RAIL ANCHORS.

⑧ THE OPTIONAL TAPERED END SHOWN IS AN ACCEPTABLE ALTERNATE TO THE VERTICAL END FOR ALL CONCRETE BARRIER RAIL ENDS.

⑨ GALVANIZE OR EPOXY COAT LOOPS AND CONNECTING PINS AFTER FABRICATION/BENDING. EPOXY COAT IN ACCORDANCE WITH SUBSECTION 711.02.1. GALVANIZE IN ACCORDANCE WITH ASTM A153, B695 (CLASS 50) OR OTHER APPLICABLE ASTM GALVANIZING STANDARDS.

* 3/4" [19 mm] CHAMFER ENTIRE OPENING (OR SUFFICIENTLY ROUNDED SO THAT A SMOOTH EDGE RESULTS.) 1/2" [13 mm] CHAMFER IS ACCEPTABLE.

** USE THE ALTERNATE 8" [200 mm] DIA. HOLE IN THIS RAIL ON A CASE-BY-CASE BASIS AS SPECIFIED IN THE PLANS.

UNITS SHOWN IN BRACKETS [] ARE METRIC AND ARE IN MILLIMETERS (mm) UNLESS OTHER UNITS ARE SHOWN.

DETAILED DRAWING	
REFERENCE STANDARD SPEC. SECTION 554, 606, 624, 711	DWG. NO. 606-60
CONCRETE BARRIER RAIL	
EFFECTIVE: SEPTEMBER 2014	

MDT MONTANA DEPARTMENT OF TRANSPORTATION

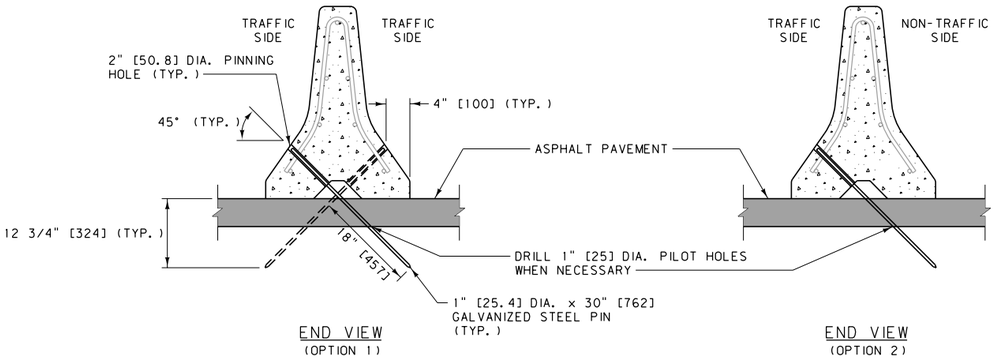

END VIEW (OPTION 1)

END VIEW (OPTION 2)

TYPE 1 ANCHOR
(FOR TEMPORARY OR PERMANENT CONCRETE BARRIER RAIL INSTALLATIONS ON ASPHALT PAVEMENT)

OPTION 1 = TRAFFIC ON BOTH SIDES OF C.B.R.
OPTION 2 = TRAFFIC ON ONE SIDE OF C.B.R.

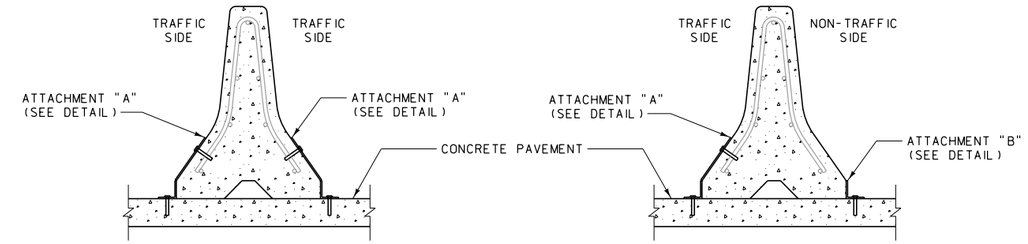

END VIEW (OPTION 1)

END VIEW (OPTION 2)

TYPE 2 & 3 ANCHORS
(FOR TEMPORARY CONCRETE BARRIER RAIL INSTALLATIONS ON CONCRETE PAVEMENT)

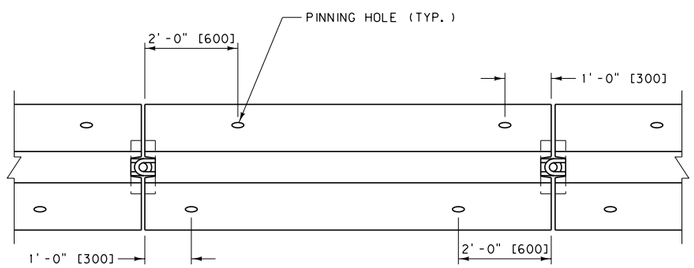

TYPE 1 ANCHOR
PLAN VIEW

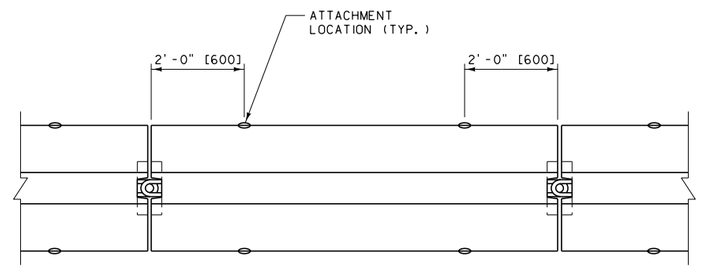

TYPE 2 ANCHOR
PLAN VIEW

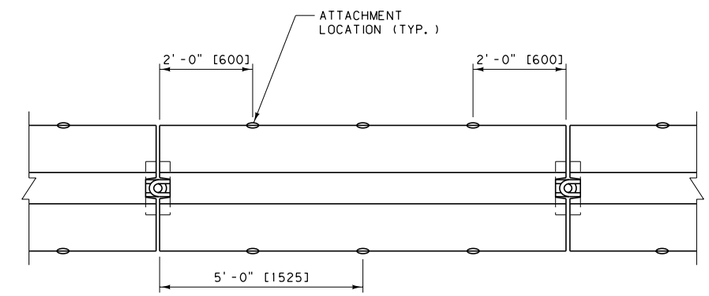

TYPE 3 ANCHOR
PLAN VIEW

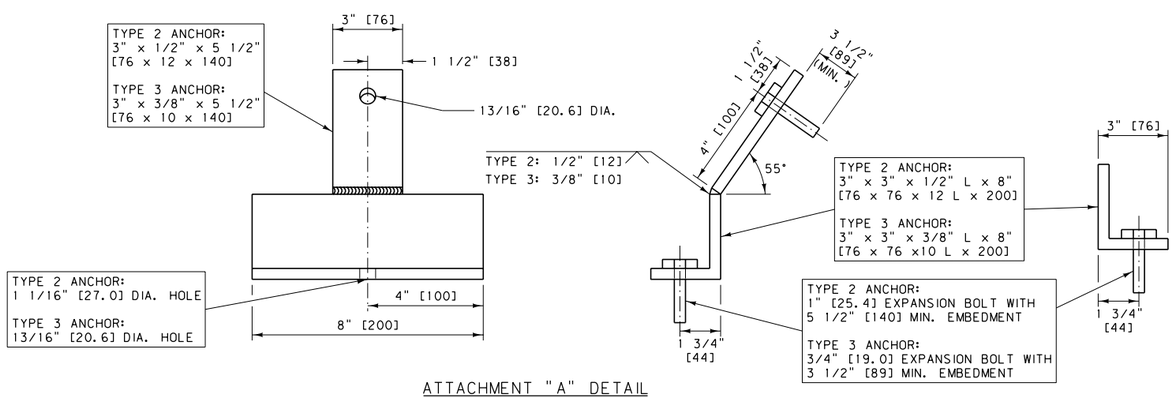

ATTACHMENT "A" DETAIL

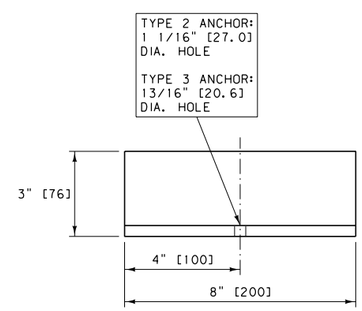

ATTACHMENT "B" DETAIL

NOTES:

1. USE THESE ANCHORS WITH STANDARD CONCRETE BARRIER RAIL (C.B.R.), AS SHOWN IN DTL. DWG. NO. 606-60, WHEN DEFLECTION OF THE SYSTEM NEEDS TO BE LIMITED.
2. CAST THE PINNING HOLES INTO THE C.B.R. USING 2" [50.8] I.D. STEEL PIPE. DO NOT DRILL THE PINNING HOLES.
3. USE STEEL CONFORMING TO AASHTO M 270 [270M], GRADE 36 [250]OR BETTER FOR PINS AND ATTACHMENT ANGLES. GALVANIZE IN ACCORDANCE WITH SUBSECTION 711.08.
4. USE TYPE 2 ANCHORS WHEN A DEEPER EMBEDMENT (5 1/2" [140]) INTO THE BRIDGE DECK OR CONCRETE PAVEMENT IS PERMISSIBLE.
5. ADJUST THE LOCATION OF THE TYPE 2 OR TYPE 3 ANCHORS TO AVOID THE MAIN REINFORCING WHEN PLACED ON BRIDGE DECK.
6. USE SHIMS TO PROPERLY FIT THE TYPE 2 AND TYPE 3 ANCHORS TO THE BARRIER AND ROADWAY SURFACES.
7. AFTER REMOVING TYPE 2 OR TYPE 3 ANCHORS, CLEAN THE HOLES IN THE CONCRETE PAVEMENT AND FILL WITH AN APPROVED NON-SHRINK OR EPOXY GROUT.
8. REMOVE TYPE 1 ANCHORS BY FIRST DRIVING THE STEEL PINS DOWN THROUGH THE BARRIER TO ALLOW LIFTING OF THE BARRIER WITHOUT INTERFERENCE. THEN REMOVE THE PINS FROM THE PAVEMENT AND FILL THE PINNING HOLES WITH AN APPROVED SEALANT.
9. DO NOT INSTALL ANCHORED CONCRETE BARRIER RAIL FOR OBSTACLES WITHIN 3.5' [1.1 m]OF THE BASE (TRAFFIC SIDE) OF THE RAIL.

UNITS SHOWN IN BRACKETS [] ARE METRIC AND ARE IN MILLIMETERS (mm) UNLESS OTHER UNITS ARE SHOWN.

DETAILED DRAWING	
REFERENCE STANDARD SPEC. SECTION 554.606	DWG. NO. 606-62
CONCRETE BARRIER RAIL ANCHORS	
EFFECTIVE: SEPTEMBER 2014	

MDT MONTANA DEPARTMENT OF TRANSPORTATION

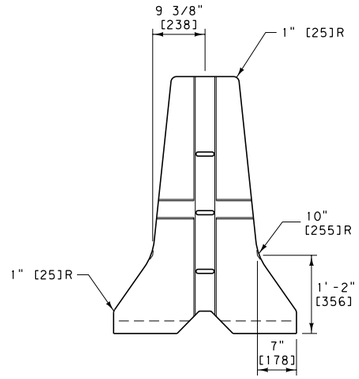

END VIEW

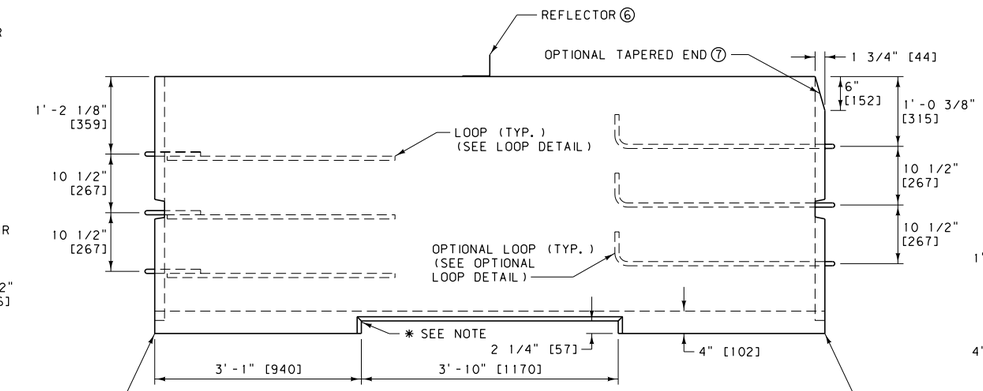

ELEVATION VIEW

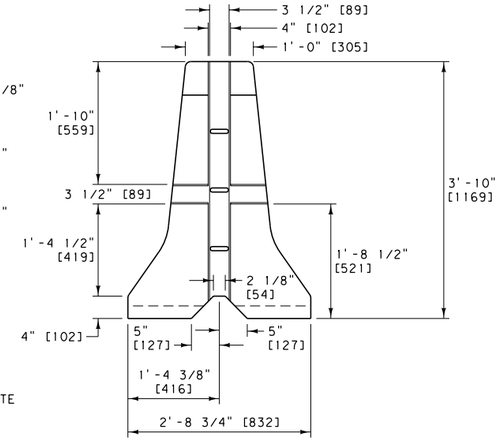

END VIEW

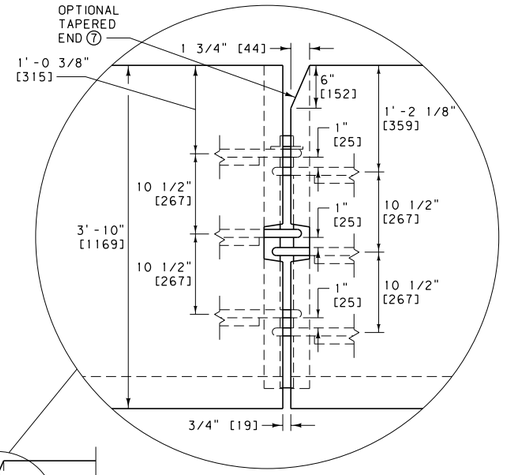

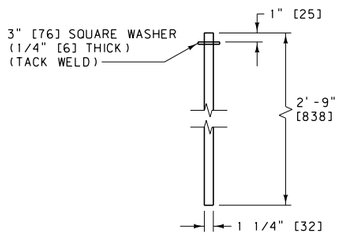

CONNECTING PIN DETAIL⑧

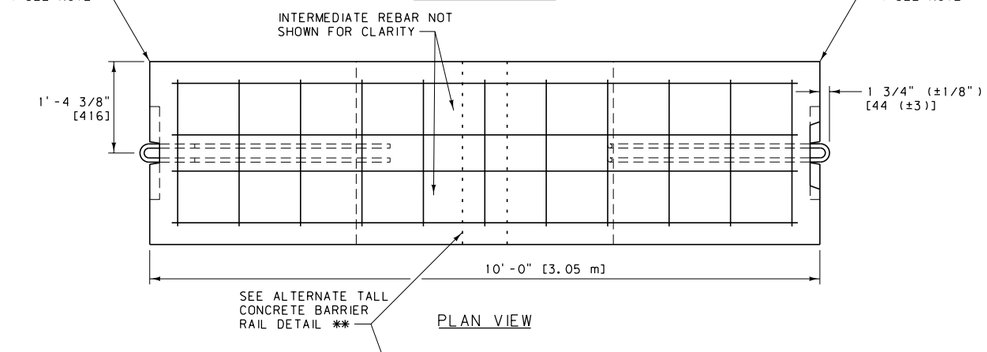

PLAN VIEW

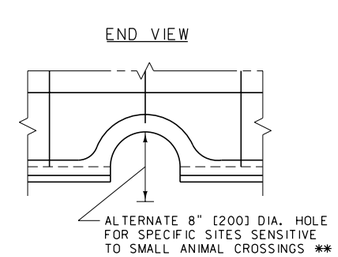

ALTERNATE TALL CONCRETE
BARRIER RAIL DETAIL

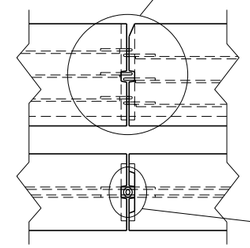

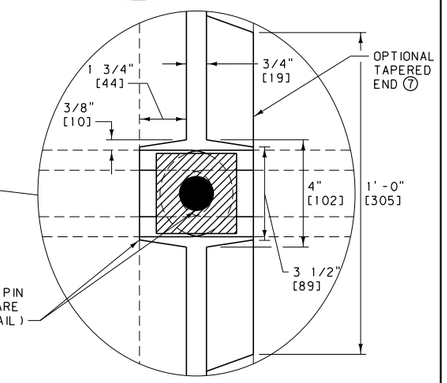

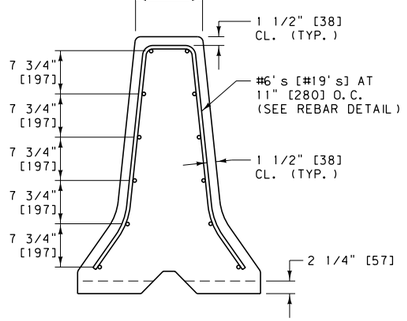

END VIEW

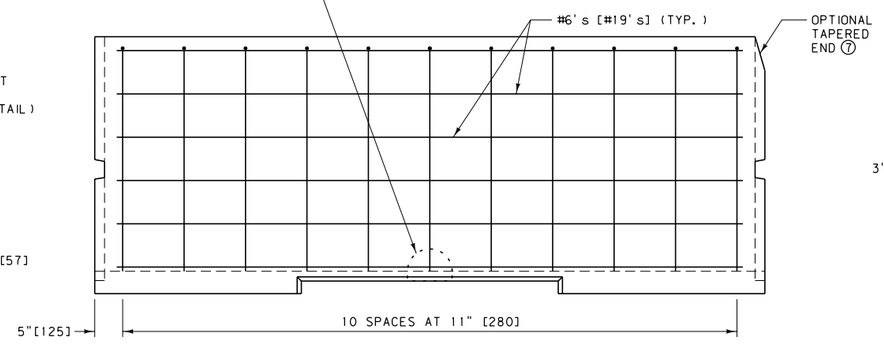

ELEVATION VIEW

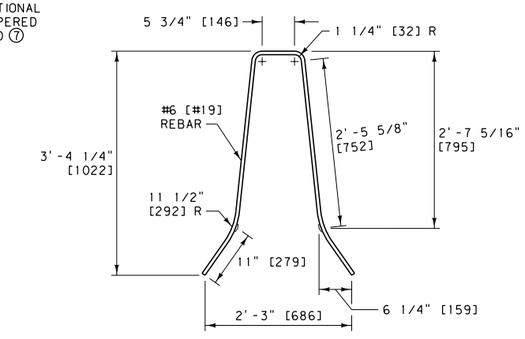

REBAR DETAIL

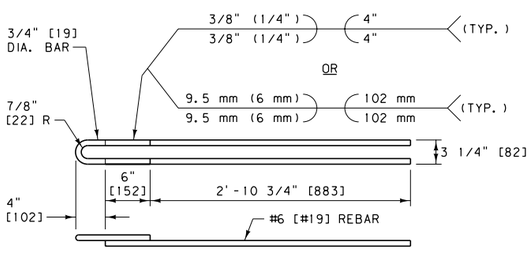

LOOP DETAIL⑧

LOOP FABRICATION REQUIREMENTS:

1. USE REINFORCING STEEL CONFORMING TO ASTM A 706 [706M], GRADE 60 [420] FOR REBAR BEING WELDED TO LOOPS.
2. LOOP ENDS CONSIST OF SMOOTH ROUND BARS CONFORMING TO AASHTO M 270 [270M], GRADE 36 [250].
3. COLD BEND THE LOOPS BY USING A JIG THAT WILL PRODUCE AN ACCURATE RADIUS WITHOUT MARRING THE BAR. DO NOT HEAT THE BAR TO FACILITATE BENDING.
4. WELD REBAR TO LOOPS MEETING SECTION 556 REQUIREMENTS USING 1/8" [3 mm] DIA. E8018 ROD. DO NOT TACK WELD THE PIECES TOGETHER PRIOR TO WELDING.
5. NO ADDITIONAL WELDING IS PERMITTED ON THE SMOOTH ROUND BARS OR REINFORCING STEEL.

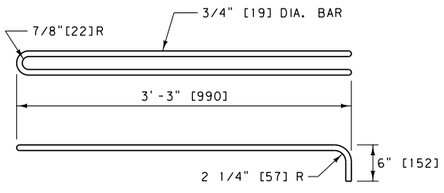

OPTIONAL LOOP DETAIL⑧

OPTIONAL LOOP FABRICATION REQUIREMENTS:

1. USE CONTINUOUS SMOOTH ROUND BARS CONFORMING TO AASHTO M 270 [270M], GRADE 36 [250] TO FABRICATE THE OPTIONAL LOOPS.
2. COLD BEND THE LOOPS BY USING A JIG THAT WILL PRODUCE AN ACCURATE RADIUS WITHOUT MARRING THE BAR. DO NOT HEAT THE BAR TO FACILITATE BENDING.
3. NO WELDING IS PERMITTED ON THE SMOOTH ROUND BARS OR REINFORCING STEEL.

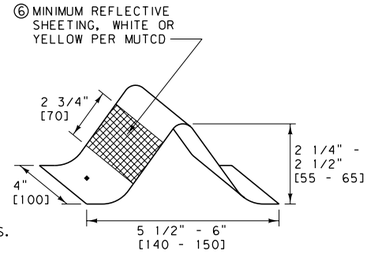

REFLECTOR
(SEE NOTES)

NOTES:

① USE CLASS DECK CONCRETE OR EQUIVALENT.

② REINFORCING STEEL CONSISTS OF DEFORMED BARS CONFORMING TO AASHTO M 31 [31M], GRADE 60 [420].

③ CONNECT EACH 10' [3.05 m] SECTION WITH CONNECTING PINS AS DETAILED AND CONFORMING TO AASHTO M 270 [270M], GRADE 36 [250] OR BETTER. CONNECTING PINS NEED NOT BE PAINTED.

④ CUTOUTS ON ENDS OF EACH SECTION ARE SHOWN WITH SLIGHT TAPER TO FACILITATE FORM REMOVAL. RECTANGULAR CUTOUTS ARE ACCEPTABLE.

⑤ THE CONTRACTOR IS RESPONSIBLE FOR THE PROPER FIT-UP OF THE PRECAST CONCRETE BARRIER RAIL. ASSEMBLE AND PIN SUFFICIENT NUMBER OF PRECAST SECTIONS IN THE FABRICATIONS PLANT TO DETERMINE THAT PROPER FIT-UP CAN BE MAINTAINED ON ALL ROADWAY ALIGNMENT, CURVES AS WELL AS ON TANGENT. THIS IS TO BE DETERMINED EARLY IN FABRICATION.

⑥ ATTACH REFLECTORS TO RAIL EVERY 30' [9.15 m]. USE ALUMINUM ALLOY MEETING THE ALUMINUM ASSOCIATION ALLOY AA5052-H32. FOLLOW THE MANUFACTURER'S SPECIFICATIONS FOR ADHESIVE MOUNTING. IN NARROW PAVED (FLUSH) MEDIAN APPLICATIONS, REFLECTORIZE BOTH SIDES.

⑦ THE OPTIONAL TAPERED END SHOWN IS AN ACCEPTABLE ALTERNATE TO THE VERTICAL END FOR ALL CONCRETE BARRIER RAIL ENDS.

⑧ GALVANIZE OR EPOXY COAT LOOPS AND CONNECTING PINS AFTER FABRICATION/BENDING. EPOXY COAT IN ACCORDANCE WITH SUBSECTION 711.02.1. GALVANIZE IN ACCORDANCE WITH ASTM A153, B695 (CLASS 50) OR OTHER APPLICABLE ASTM GALVANIZING STANDARDS.

* 3/4" [19 mm] CHAMFER ENTIRE OPENING (OR SUFFICIENTLY ROUNDED SO THAT A SMOOTH EDGE RESULTS.) 1/2" [13 mm] CHAMFER IS ACCEPTABLE.

** USE THE ALTERNATE 8" [200 mm] DIA. HOLE IN THIS RAIL ON A CASE-BY-CASE BASIS AS SPECIFIED IN THE PLANS

UNITS SHOWN IN BRACKETS [] ARE METRIC AND ARE IN MILLIMETERS (mm) UNLESS OTHER UNITS ARE SHOWN.

DETAILED DRAWING	
REFERENCE STANDARD SPEC. SECTION 554, 556, 606, 711	DWG. NO. 606-64
TALL CONCRETE BARRIER RAIL	
EFFECTIVE: SEPTEMBER 2014	

MDT MONTANA DEPARTMENT OF TRANSPORTATION

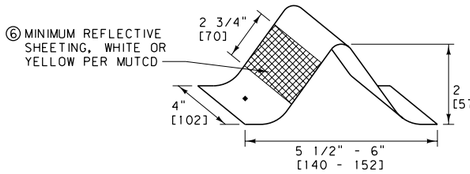

REFLECTOR
(SEE NOTES)

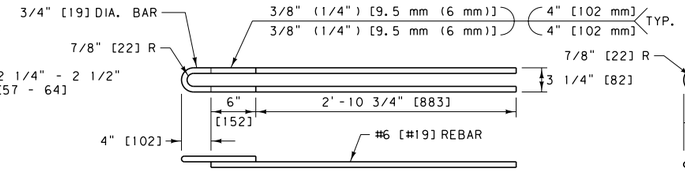

LOOP DETAIL⑧

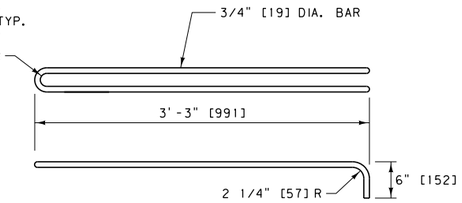

OPTIONAL LOOP DETAIL⑧

LOOP FABRICATION REQUIREMENTS:

1. USE REINFORCING STEEL CONFORMING TO ASTM A 706 [706M], GRADE 60 [420]FOR REBAR BEING WELDED TO LOOPS.
2. LOOP ENDS CONSIST OF SMOOTH ROUND BARS CONFORMING TO AASHTO M 270 [270M], GRADE 36 [250].
3. COLD BEND THE LOOPS BY USING A JIG THAT WILL PRODUCE AN ACCURATE RADIUS WITHOUT MARRING THE BAR. DO NOT HEAT THE BAR TO FACILITATE BENDING.
4. WELD REBAR TO LOOPS MEETING SECTION 556 REQUIREMENTS USING 1/8" [3] DIA. E8018 ROD. DO NOT TACK WELD THE PIECES TOGETHER PRIOR TO WELDING.
5. NO ADDITIONAL WELDING IS PERMITTED ON THE SMOOTH ROUND BARS OR REINFORCING STEEL.

OPTIONAL LOOP FABRICATION REQUIREMENTS:

1. USE CONTINUOUS SMOOTH ROUND BARS CONFORMING TO AASHTO M 270, [270M]GRADE 36 [250]TO FABRICATE THE OPTIONAL LOOPS.
2. COLD BEND THE LOOPS BY USING A JIG THAT WILL PRODUCE AN ACCURATE RADIUS WITHOUT MARRING THE BAR. DO NOT HEAT THE BAR TO FACILITATE BENDING.
3. NO ADDITIONAL WELDING IS PERMITTED ON THE SMOOTH ROUND BARS OR REINFORCING STEEL.

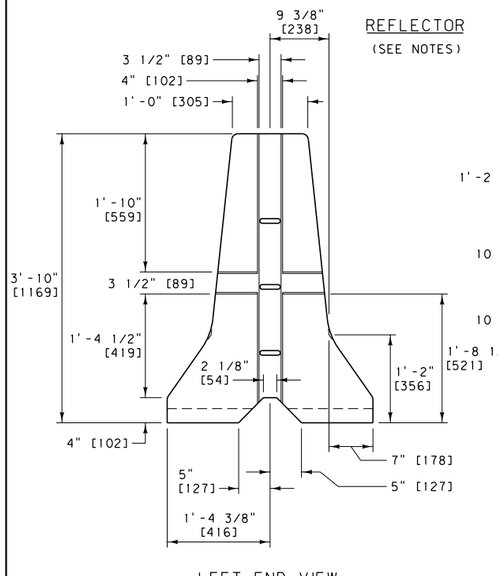

LEFT END VIEW

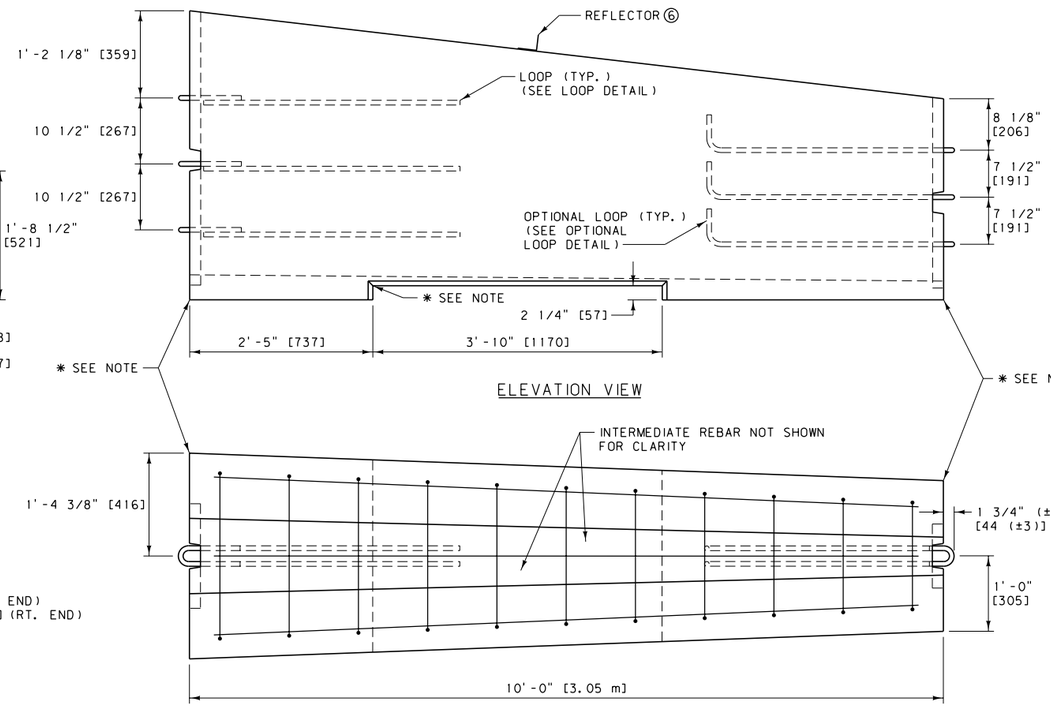

ELEVATION VIEW

PLAN VIEW

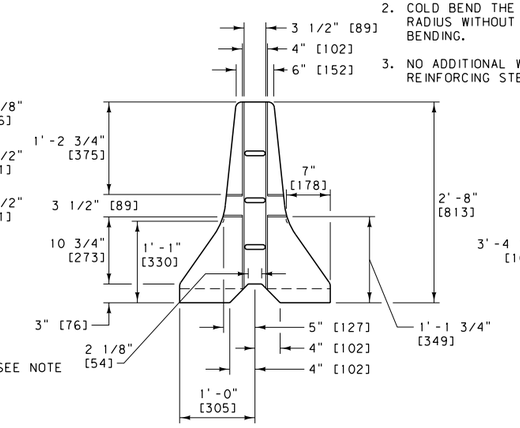

RIGHT END VIEW

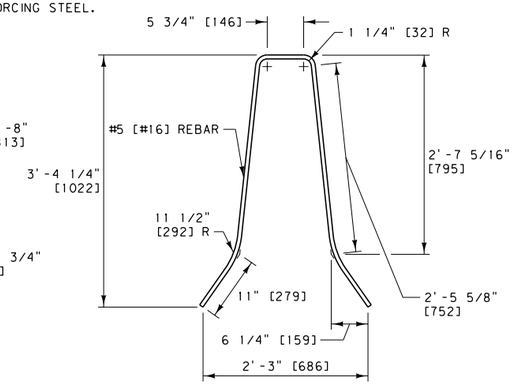

REBAR DETAIL LEFT END

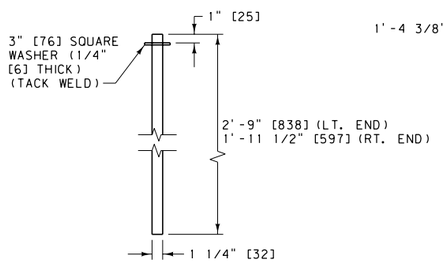

CONNECTING PIN DETAIL⑧

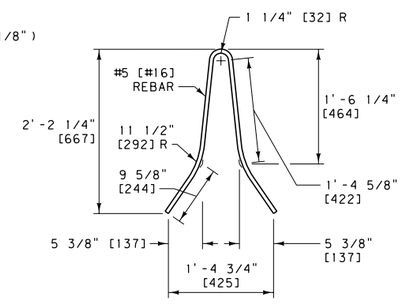

REBAR DETAIL RIGHT END

NOTES:

① USE CLASS DECK CONCRETE OR EQUIVALENT.

② REINFORCING STEEL CONSISTS OF DEFORMED BARS CONFORMING TO AASHTO M 31 [31M], GRADE 60 [420].

③ CONNECT EACH 10' SECTION WITH CONNECTING PINS AS DETAILED AND CONFORMING TO AASHTO M 270 [270M], GRADE 36 [250]OR BETTER. CONNECTING PINS NEED NOT BE PAINTED.

④ CUTOUTS ON ENDS OF EACH SECTION ARE SHOWN WITH SLIGHT TAPER TO FACILITATE FORM REMOVAL. RECTANGULAR CUTOUTS ARE ACCEPTABLE.

⑤ THE CONTRACTOR IS RESPONSIBLE FOR THE PROPER FIT-UP OF THE PRECAST CONCRETE BARRIER RAIL. ASSEMBLE AND PIN SUFFICIENT NUMBER OF PRECAST SECTIONS IN THE FABRICATIONS PLANT TO DETERMINE THAT PROPER FIT-UP CAN BE MAINTAINED ON ALL ROADWAY ALIGNMENT, CURVES AS WELL AS ON TANGENT. THIS IS TO BE DETERMINED EARLY IN FABRICATION.

⑥ ATTACH REFLECTORS TO RAIL EVERY 30' [9.15 m]. USE ALUMINUM ALLOY MEETING THE ALUMINUM ASSOCIATION ALLOY AA5052-H32. FOLLOW THE MANUFACTURER'S SPECIFICATIONS FOR ADHESIVE MOUNTING. IN NARROW PAVED (FLUSH) MEDIAN APPLICATIONS, REFLECTORIZE BOTH SIDES.

⑦ SEE DETAILED DRAWINGS 606-60 AND 606-64 FOR INFORMATION ON THE ADJACENT CONCRETE BARRIER RAIL SECTIONS. THE OPTIONAL TAPERED END DETAIL MAY ALSO BE USED HERE.

⑧ GALVANIZE OR EPOXY COAT LOOPS AND CONNECTING PINS AFTER FABRICATION/BENDING. EPOXY COAT IN ACCORDANCE WITH SUBSECTION 711.02.1. GALVANIZE IN ACCORDANCE WITH ASTM A153, B695 (CLASS 50) OR OTHER APPLICABLE ASTM GALVANIZING STANDARDS.

* 3/4" [19 mm]CHAMFER ENTIRE OPENING (OR SUFFICIENTLY ROUNDED SO THAT A SMOOTH EDGE RESULTS.) 1/2" [13 mm]CHAMFER IS ACCEPTABLE.

NOTE:

LEFT AND RIGHT REBAR DETAILS ARE FOR NORMAL TALL AND REGULAR CONCRETE BARRIER RAIL SECTIONS. TAPER REBAR HEIGHT AND WIDTH AS NEEDED BY MAINTAINING THE VERTICAL POSITION FROM THE BOTTOM AND THE 1 1/2" [38] CLEARANCE AT ALL LOCATIONS.

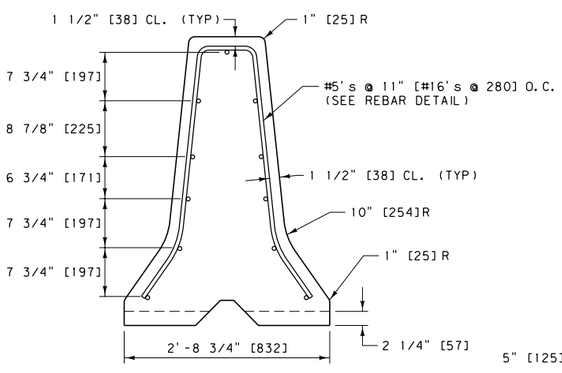

LEFT END VIEW

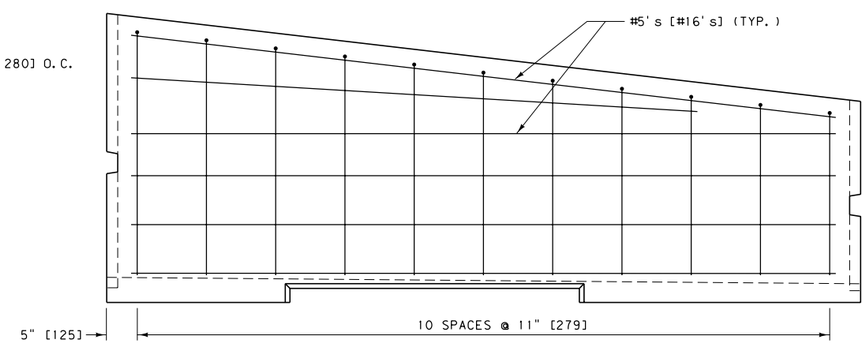

ELEVATION VIEW

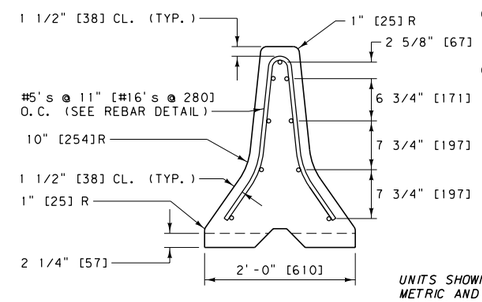

RIGHT END VIEW

UNITS SHOWN IN BRACKETS [] ARE METRIC AND ARE IN MILLIMETERS (mm) UNLESS OTHER UNITS ARE SHOWN.

DETAILED DRAWING	
REFERENCE STANDARD SPEC. SECTION 554, 556, 606, 711	DWG. NO. 606-66
CONCRETE BARRIER RAIL TRANSITION	
EFFECTIVE: SEPTEMBER 2014	

MDT MONTANA DEPARTMENT OF TRANSPORTATION

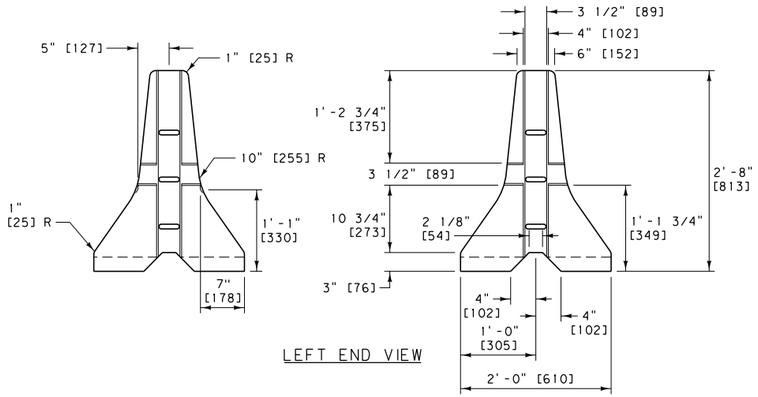

LEFT END VIEW

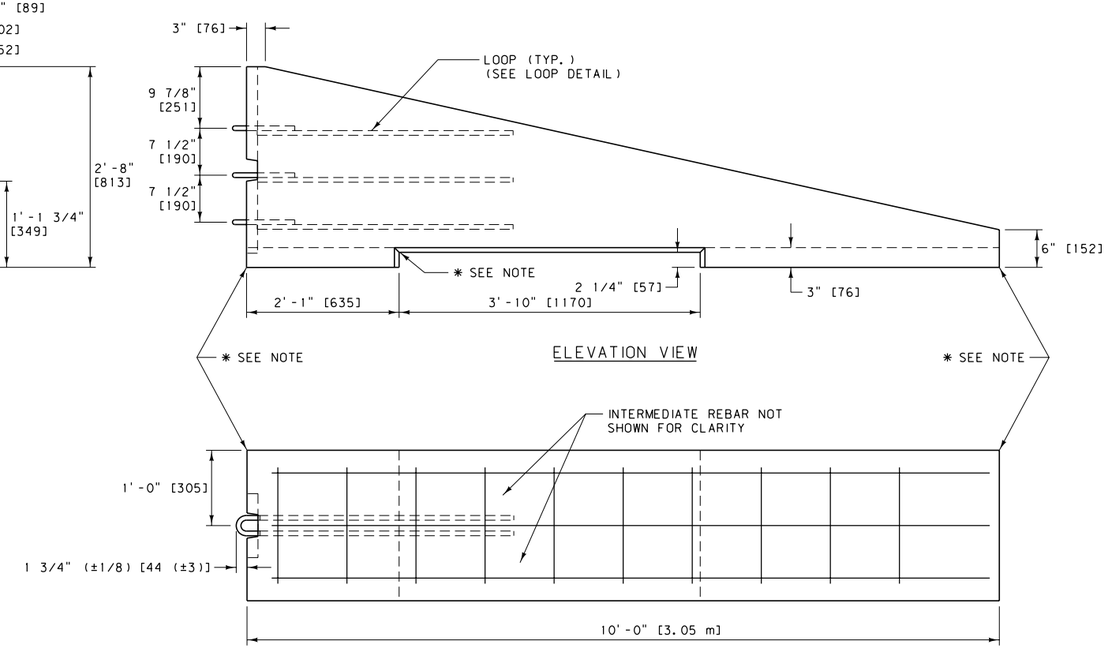

ELEVATION VIEW

PLAN VIEW

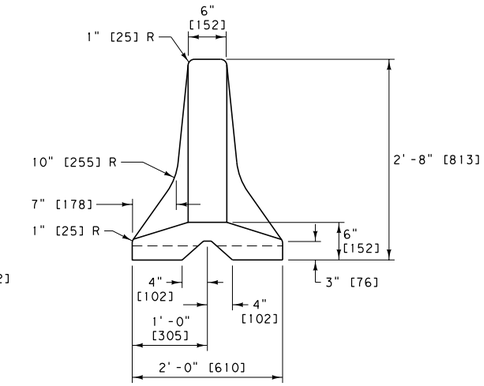

RIGHT END VIEW

NOTES:

① USE CLASS DECK CONCRETE OR EQUIVALENT.

② REINFORCING STEEL CONSISTS OF DEFORMED BARS CONFORMING TO AASHTO M 31 [31M], GRADE 60 [420].

③ CONNECT EACH 10' [3.05 m]SECTION WITH CONNECTING PINS AS DETAILED AND CONFORMING TO AASHTO M 270 [270M], GRADE 36 [250]OR BETTER. CONNECTING PINS NEED NOT BE PAINTED.

④ CUTOUTS ON LEFT END OF EACH SECTION ARE SHOWN WITH SLIGHT TAPER TO FACILITATE FORM REMOVAL. RECTANGULAR CUTOUTS ARE ACCEPTABLE.

⑤ THE CONTRACTOR IS RESPONSIBLE FOR THE PROPER FIT-UP OF THE PRECAST CONCRETE BARRIER RAIL. ASSEMBLE AND PIN SUFFICIENT NUMBER OF PRECAST SECTIONS IN THE FABRICATIONS PLANT TO DETERMINE THAT PROPER FIT-UP CAN BE MAINTAINED ON ALL ROADWAY ALIGNMENT CURVES AS WELL AS ON TANGENT. THIS IS TO BE DETERMINED EARLY IN FABRICATION.

⑥ SEE DTL. DWG. NO. 606-60 FOR INFORMATION ON THE ADJACENT CONCRETE BARRIER RAIL SECTION. THE OPTIONAL TAPERED END DETAIL MAY ALSO BE USED HERE.

⑦ GALVANIZE OR EPOXY COAT LOOPS AND CONNECTING PINS AFTER FABRICATION/ BENDING. EPOXY COAT IN ACCORDANCE WITH SUBSECTION 711.02.1. GALVANIZE IN ACCORDANCE WITH ASTM A153, B695 (CLASS 50) OR OTHER APPLICABLE ASTM GALVANIZING STANDARDS.

* 3/4" [19 mm]CHAMFER ENTIRE OPENING (OR SUFFICIENTLY ROUNDED SO THAT A SMOOTH EDGE RESULTS.) 1/2" [13 mm]CHAMFER IS ACCEPTABLE.

NOTE:

REBAR TYPICAL AT LEFT END ONLY. TAPER THE REBAR HEIGHT AS NEEDED BY MAINTAINING THE VERTICAL POSITION FROM THE BOTTOM AND THE 1 1/2" [38 mm]CLEARANCE AT ALL LOCATIONS.

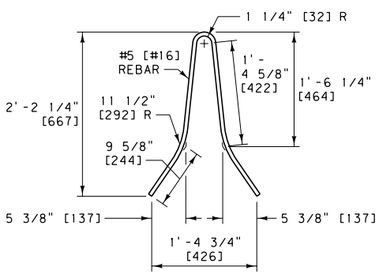

REBAR DETAIL LEFT END

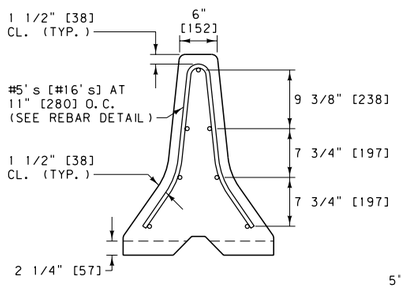

LEFT END VIEW

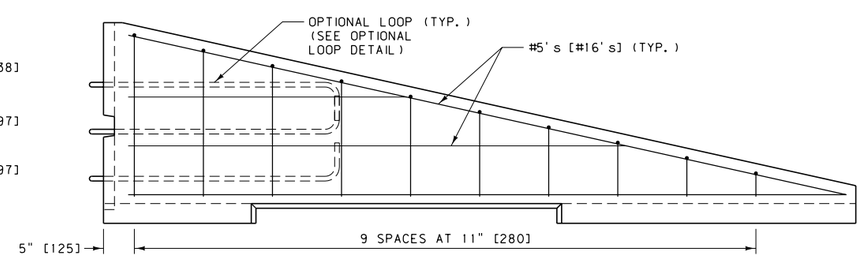

ELEVATION VIEW

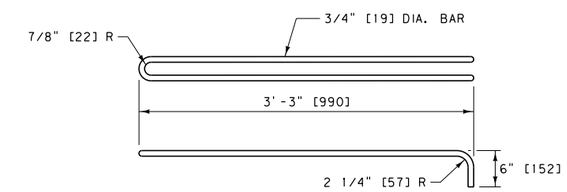

OPTIONAL LOOP DETAIL ⑦

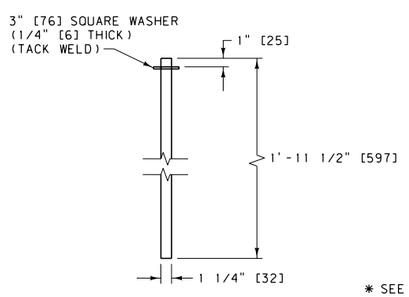

CONNECTING PIN DETAIL ⑦

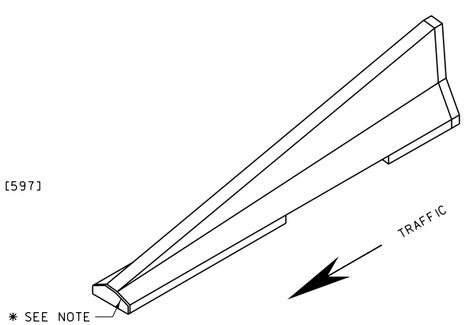

ISOMETRIC VIEW

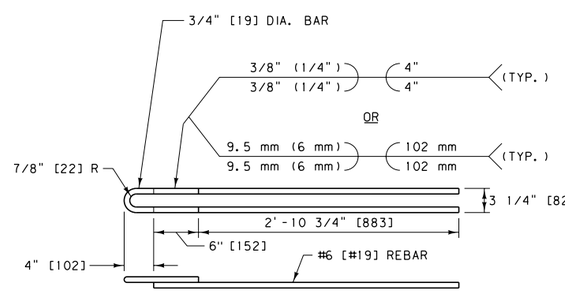

LOOP DETAIL ⑦

LOOP FABRICATION REQUIREMENTS:

1. USE REINFORCING STEEL CONFORMING TO ASTM A 706 [706M], GRADE 60 [420] FOR REBAR BEING WELDED TO LOOPS.
2. LOOP ENDS CONSIST OF SMOOTH ROUND BARS CONFORMING TO AASHTO M 270 [270M], GRADE 36 [250].
3. COLD BEND THE LOOPS BY USING A JIG THAT WILL PRODUCE AN ACCURATE RADIUS WITHOUT MARRING THE BAR. DO NOT HEAT THE BAR TO FACILITATE BENDING.
4. WELD REBAR TO LOOPS MEETING SECTION 556 REQUIREMENTS USING 1/8" [3 mm]DIA. E8018 ROD. DO NOT TACK WELD THE PIECES TOGETHER PRIOR TO WELDING.
5. NO ADDITIONAL WELDING IS PERMITTED ON THE SMOOTH ROUND BARS OR REINFORCING STEEL.

OPTIONAL LOOP FABRICATION REQUIREMENTS:

1. USE CONTINUOUS SMOOTH ROUND BARS CONFORMING TO AASHTO M 270 [270M], GRADE 36 [250] TO FABRICATE THE OPTIONAL LOOPS.
2. COLD BEND THE LOOPS BY USING A JIG THAT WILL PRODUCE AN ACCURATE RADIUS WITHOUT MARRING THE BAR. DO NOT HEAT THE BAR TO FACILITATE BENDING.
3. NO WELDING IS PERMITTED ON THE SMOOTH ROUND BARS OR REINFORCING STEEL.

UNITS SHOWN IN BRACKETS [] ARE METRIC AND ARE IN MILLIMETERS (mm) UNLESS OTHER UNITS ARE SHOWN.

DETAILED DRAWING	
REFERENCE STANDARD SPEC. SECTION 554, 606, 711	DWG. NO. 606-68
CONCRETE BARRIER RAIL TERMINAL SECTION (ONE-WAY DEPARTURE)	
EFFECTIVE: SEPTEMBER 2014	

MDT MONTANA DEPARTMENT OF TRANSPORTATION

SCHEDULE OF GUARDRAIL HARDWARE

DESIGNATION ①	DESCRIPTION	METRIC DESCRIPTION	DTL. DWG. NO. (606-###)	GUARDRAIL TYPE ②	DTL. DWGS. WHERE PARTS USED																	
					606-05A	606-05B	606-09	606-11A	606-11B	606-18	606-24A	606-24B	606-25A	606-25B	606-40	606-41	606-46	606-50	606-52	606-53	606-53A	606-54	606-58
FBB01-05	5/8" DIA. GUARDRAIL BOLT AND RECESS NUT	M16 GUARDRAIL BOLT AND RECESS NUT	82	W	X		X	X		X							X						X
FBB01-05	5/8" DIA. GUARDRAIL BOLT	M16 GUARDRAIL BOLT	82	W		X			X														
FBH01	5/16" DIA. HOOK BOLT	M8 HOOK BOLT	92	C											X								
FBH02	5/16" DIA. ALTERNATE HOOK BOLT	M8 ALTERNATE HOOK BOLT	92	C											X								
FBX10a	3/8" DIA. HEX BOLT	M10 HEX BOLT	82	B														X	X	X	X		X
FBX12a	1/2" DIA. HEX BOLT	M12 HEX BOLT	82	B, C												X		X	X	X	X		X
FBX14a	9/16" DIA. HEX BOLT	M14 HEX BOLT	82	B																			X
FBX16a	5/8" DIA. HEX BOLT	M16 HEX BOLT	82	W						X							X						
FBX20a	3/4" DIA. HEX BOLT	M20 HEX BOLT	82	W													X						
FBX20b	3/4" DIA. HIGH STRENGTH HEX BOLT	M20 HIGH STRENGTH HEX BOLT	82	B														X		X	X	X	X
FBX22b	7/8" DIA. HIGH STRENGTH HEX BOLT	M22 HIGH STRENGTH HEX BOLT	82	W							X	X											
FBX24b	1" DIA. HIGH STRENGTH HEX BOLT	M24 HIGH STRENGTH HEX BOLT	82	B																	X		
FCA01	CABLE ASSEMBLY	CABLE ASSEMBLY	84	W						X							X						
FMM01	CABLE WEDGE	CABLE WEDGE	94	C											X								
FMM02	POST SLEEVE	POST SLEEVE	84	W						X							X						
FNS20	3/4" DIA. SQUARE NUT	M20 SQUARE NUT	82	C												X							
FNX08a	5/16" DIA. HEX NUT	M8 HEX NUT	82	C											X								
FNX10a	3/8" DIA. HEX NUT	M10 HEX NUT	82	B														X	X	X	X		X
FNX12a	1/2" DIA. HEX NUT	M12 HEX NUT	82	B, C												X		X	X	X	X		X
FNX14a	9/16" DIA. HEX NUT	M14 HEX NUT	82	B																			X
FNX16a	5/8" DIA. HEX NUT	M16 HEX NUT	82	W		X			X	X							X						
FNX20a	3/4" DIA. HEX NUT	M20 HEX NUT	82	C, W												X	X						X
FNX20b	3/4" DIA. HIGH STRENGTH HEX NUT	M20 HIGH STRENGTH HEX NUT	82	B																X	X	X	X
FNX22b	7/8" DIA. HIGH STRENGTH HEX NUT	M22 HIGH STRENGTH HEX NUT	82	W							X	X											
FNX24a	1" DIA. HEX NUT	M24 HEX NUT	82	W						X							X						
FNX24b	1" DIA. HIGH STRENGTH HEX NUT	M24 HIGH STRENGTH HEX NUT	82	B																	X		
FPA01	GUARDRAIL ANCHOR BRACKET & END PLATE	GUARDRAIL ANCHOR BRACKET & END PLATE	84	W						X							X						
FPA02	CABLE ANCHOR BRACKET	CABLE ANCHOR BRACKET	95	C												X							
FPB01	BEARING PLATE	BEARING PLATE	18 & 46	W						X							X						
FPP01	BOX BEAM SUPPORT BRACKET	BOX BEAM SUPPORT BRACKET	97	B														X	X	X	X		X
FRH20a	3/4" DIA. HOOKED ANCHOR ROD	M20 HOOKED ANCHOR ROD	82	C												X							X
FWC10a	3/8" DIA. FLAT WASHER	M10 FLAT WASHER	82	B														X	X	X	X		X
FWC12a	1/2" DIA. FLAT WASHER	M12 FLAT WASHER	82	B, C												X		X	X	X	X		X
FWC14a	9/16" DIA. FLAT WASHER	M14 FLAT WASHER	82	B																			X
FWC16a	5/8" DIA. FLAT WASHER	M16 FLAT WASHER	82	W	X	X	X	X	X	X							X						
FWC20a	3/4" DIA. FLAT WASHER	M20 FLAT WASHER	82	C, W												X	X						X
FWC20b	3/4" DIA. HARDENED FLAT WASHER	M20 HARDENED FLAT WASHER	82	B														X		X	X	X	X
FWC24a	1" DIA. FLAT WASHER	M24 FLAT WASHER	82	W						X							X						
FWR03	RECTANGULAR PLATE WASHER	RECTANGULAR PLATE WASHER	84	W						X													
PDB01	WOOD BLOCKOUT	WOOD BLOCKOUT	05A, 05B, 11A, &11B	W	X	X	X	X	X														
PDE02	WOOD GUARDRAIL POST	WOOD GUARDRAIL POST	05A & 11A	W	X			X															
PDE09	CRT POST	CRT POST	46	W			X										X						
PDF01	WOOD BREAKAWAY POST	WOOD BREAKAWAY POST	46	W													X						
PDF03	END POST	END POST	18	W						X													
PLS01	SOIL PLATE	SOIL PLATE	92 & 97	B, C											X			X	X	X			
PLS03	SOIL PLATE	SOIL PLATE	46	W													X						
PSE01	CABLE GUARDRAIL LINE POST	CABLE GUARDRAIL LINE POST	92	C											X								
PSE05	TYPE D BOX BEAM POST	TYPE D BOX BEAM POST	97	B															X				
PSE06	CABLE GUARDRAIL ANCHOR POST	CABLE GUARDRAIL ANCHOR POST	95	C												X							
PSE08	TYPE A BOX BEAM POST	TYPE A BOX BEAM POST	97	B														X		X			X
PTE05	STEEL TUBE	STEEL TUBE	46	W													X						
PWE01	STEEL GUARDRAIL POST	STEEL GUARDRAIL POST	05B	W		X			X														
RBM01	BOX BEAM RAIL	BOX BEAM RAIL	98	B														X		X		X	X
RBM05	BOX BEAM TERMINAL RAIL	BOX BEAM TERMINAL RAIL	98	B															X				
RBS01	BOX BEAM SPLICE PLATE	BOX BEAM SPLICE PLATE	98	B														X					
RCE01	COMPENSATING CABLE END ASSEMBLY	COMPENSATING CABLE END ASSEMBLY	94	C											X								
RCE03	CABLE END ASSEMBLY	CABLE END ASSEMBLY	94	C												X							X
RCM01	3/4" DIA. CABLE	19.1 DIA. CABLE	94	C											X	X							
RWE01a-b	W-BEAM END SECTION (FLARED)	W-BEAM END SECTION (FLARED)	88	W						X													
RWE02a-b	W-BEAM TERMINAL CONNECTOR	W-BEAM TERMINAL CONNECTOR	88	W							X	X	X	X			X						
RWE06a-b	W-BEAM END SECTION (BUFFER)	W-BEAM END SECTION (BUFFER)	88	W													X						
RWM02a-b	W-BEAM (12'-6" LENGTH)	W-BEAM (3.81 m LENGTH)	88	W	X	X	X	X	X	X													X
RWM22a-b	W-BEAM (25'-0" LENGTH)	W-BEAM (7.62 m LENGTH)	88	W	X	X	X	X	X	X													X
SEC01	CABLE GUARDRAIL TERMINAL ANCHOR ASSEMBLY	CABLE GUARDRAIL TERMINAL ANCHOR ASSEMBLY	41	C											X								
N/A	TURNBUCKLE CABLE END ASSEMBLY	TURNBUCKLE CABLE END ASSEMBLY	94	C											X								
N/A	KEEPER PLATE	KEEPER PLATE	95	C												X							
N/A	TYPE B BOX BEAM POST	TYPE B BOX BEAM POST	97	B																X			
N/A	SUPPORT BRACKET WITH TS6 x 6 x 3/16 BLOCKOUT	SUPPORT BRACKET WITH TS152 x 152 x 4.8 BLOCKOUT	97	B																	X		
N/A	TRANSITION POST	TRANSITION POST	97	B																	X		
N/A	TS6 x 6 x 3/16 BR. APP. SECT. UPPER RAIL NO. 1	TS152 x 152 x 4.8 BR. APP. SECT. UPPER RAIL NO. 1	98	B																X			
N/A	TS6 x 2 x 1/4 BR. APP. SECT. LOWER RAIL NO. 1	TS152 x 51 x 6.4 BR. APP. SECT. LOWER RAIL NO. 1	98	B																X			
N/A	TS6 x 2 x 1/4 BR. APP. SECT. LOWER RAIL NO. 2	TS152 x 51 x 6.4 BR. APP. SECT. LOWER RAIL NO. 2	98	B																X			
N/A	TS6 x 2 TO TS6 x 6 CONNECTION SLEEVE	TS152 x 51 TO TS152 x 152 CONNECTION SLEEVE	98	B																X			
N/A	TS6 x 2 CONNECTION SLEEVE	TS152 x 51 CONNECTION SLEEVE	98	B																X			
N/A	TS6 x 6 x 3/16 TRANSITION RAIL	TS152 x 152 x 4.8 TRANSITION RAIL	98	B																	X		
N/A	1/4" SHIM PLATE	6.4 SHIM PLATE	99	B																	X		
N/A	ANCHOR RAIL SECTION	ANCHOR RAIL SECTION	99	B																	X		
N/A	RUB RAIL ANCHOR BRACKET (JERSEY RAIL)	RUB RAIL ANCHOR BRACKET (JERSEY RAIL)	99	B																	X		
N/A	RUB RAIL ANCHOR BRACKET (VERTICAL BRIDGE RAIL)	RUB RAIL ANCHOR BRACKET (VERTICAL BRIDGE RAIL)	99	B																	X		
N/A	TS6 x 2 x 3/16 RUB RAIL	TS152 x 51 x 4.8 RUB RAIL	99	B																	X		

NOTES:

① SEE AASHTO-AGC-ARTBA JOINT COMMITTEE TASK FORCE 13 REPORT "A GUIDE TO STANDARDIZED HIGHWAY BARRIER HARDWARE" PUBLICATION FOR ADDITIONAL AND DETAILED HARDWARE SPECIFICATIONS.

② GUARDRAIL TYPE CODES:

W = W-BEAM METAL GUARDRAIL
C = CABLE GUARDRAIL
B = BOX BEAM GUARDRAIL

ALL METRIC DESCRIPTION DIMENSIONS ARE MILLIMETERS (mm) UNLESS OTHERWISE NOTED.

MDT MONTANA DEPARTMENT OF TRANSPORTATION

EFFECTIVE: SEPTEMBER 2014

SCHEDULE OF GUARDRAIL HARDWARE

REFERENCE STANDARD SPEC. SECTION 606

DETAILED DRAWING DWG. NO. 606-80

GUARDRAIL HARDWARE

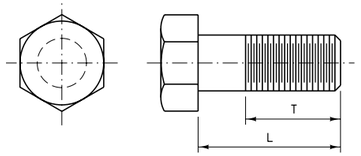

HEX BOLTS

BOLT SIZE	DESIGNATION *	L	T (MIN.)
REGULAR HEX BOLTS			
3/8" DIA.	FBX10a	3 1/2"	1 1/2"
3/8" DIA.	FBX10a	7 1/2"	1 1/2"
1/2" DIA.	FBX12a	1 1/2"	FULL
1/2" DIA.	FBX12a	2 1/2"	1 3/4"
9/16" DIA.	FBX14a	8"	2"
5/8" DIA.	FBX16a	1 1/2"	FULL
3/4" DIA.	FBX20a	8"	2"
3/4" DIA.	FBX20a	9 1/2"	2"
HIGH STRENGTH HEX BOLTS			
3/4" DIA.	FBX20b	2"	1 1/2"
3/4" DIA.	FBX20b	4"	2"
3/4" DIA.	FBX20b	8"	2"
7/8" DIA.	FBX22b	1'-0"	AS REQUIRED
1" DIA.	FBX24b	AS REQUIRED	AS REQUIRED

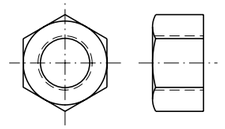

HEX NUT

NUT SIZE	DESIGNATION *
REGULAR HEX NUTS	
5/16" DIA.	FNX08a
3/8" DIA.	FNX10a
1/2" DIA.	FNX12a
9/16" DIA.	FNX14a
5/8" DIA.	FNX16a
3/4" DIA.	FNX20a
1" DIA.	FNX24a
HIGH STRENGTH HEX NUTS	
3/4" DIA.	FNX20b
7/8" DIA.	FNX22b
1" DIA.	FNX24b

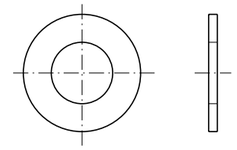

FLAT WASHERS

WASHER SIZE	DESIGNATION *
REGULAR FLAT WASHERS	
3/8" DIA.	FWC10a
1/2" DIA.	FWC12a
9/16" DIA.	FWC14a
5/8" DIA.	FWC16a
3/4" DIA.	FWC20a
1" DIA.	FWC24a
HARDENED FLAT WASHERS	
3/4" DIA.	FWC20b

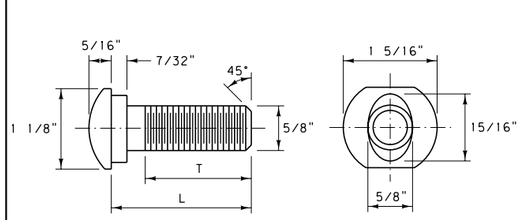

DESIGNATION *	L	T (MIN.)
FBB01	1 1/4"	1 1/8"
FBB02	2"	1 3/4"
FBB03	10"	4"
FBB04	1'-6"	4"
FBB05	2'-1"	4"

5/8" DIA. GUARDRAIL BOLT & RECESSED NUT

FBB01-05*

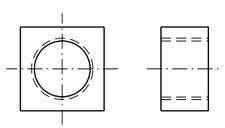

3/4" DIA. SQUARE NUT

FNS20*

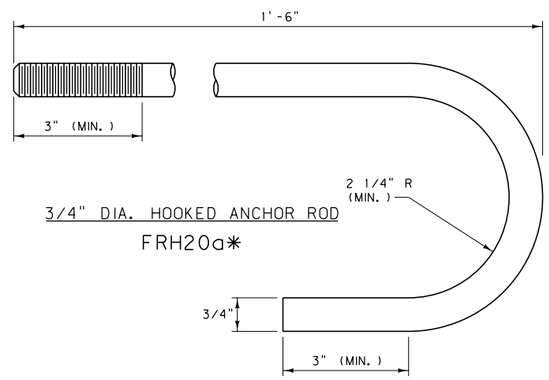

3/4" DIA. HOOKED ANCHOR ROD

FRH20a*

NOTES:

① FURNISH BOLTS AND ANCHOR RODS MEETING THE REQUIREMENTS OF SUBSECTION 705.01.1.

② FURNISH HIGH STRENGTH BOLTS MEETING THE REQUIREMENTS OF SUBSECTION 711.06.

③ GALVANIZE BOLTS, NUTS AND WASHERS IN ACCORDANCE WITH SUBSECTION 705.01.1.

* SEE DTL. DWG. NO. 606-80 FOR SCHEDULE OF GUARDRAIL HARDWARE.

METRIC GUARDRAIL HARDWARE

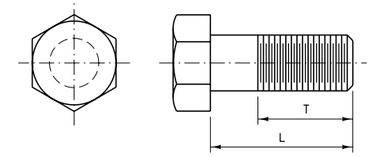

HEX BOLTS

BOLT SIZE	DESIGNATION *	L	T (MIN.)
REGULAR HEX BOLTS			
M10	FBX10a	89	38
M10	FBX10a	191	38
M12	FBX12a	38	FULL
M12	FBX12a	63	44
M14	FBX14a	203	51
M16	FBX16a	38	FULL
M20	FBX20a	203	51
M20	FBX20a	241	51
HIGH STRENGTH HEX BOLTS			
M20	FBX20b	51	38
M20	FBX20b	102	51
M20	FBX20b	203	51
M22	FBX22b	305	AS REQUIRED
M24	FBX24b	AS REQUIRED	AS REQUIRED

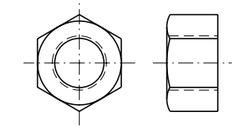

HEX NUT

NUT SIZE	DESIGNATION *
REGULAR HEX NUTS	
M8	FNX08a
M10	FNX10a
M12	FNX12a
M14	FNX14a
M16	FNX16a
M20	FNX20a
M24	FNX24a
HIGH STRENGTH HEX NUTS	
M20	FNX20b
M22	FNX22b
M24	FNX24b

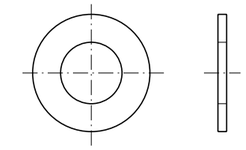

FLAT WASHERS

WASHER SIZE	DESIGNATION *
REGULAR FLAT WASHERS	
M10	FWC10a
M12	FWC12a
M14	FWC14a
M16	FWC16a
M20	FWC20a
M24	FWC24a
HARDENED FLAT WASHERS	
M20	FWC20b

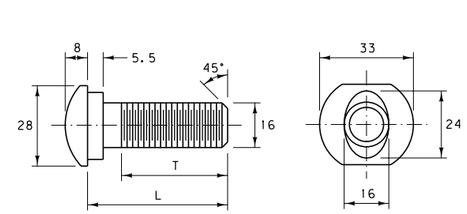

DESIGNATION *	L	T (MIN.)
FBB01	32	29
FBB02	51	44
FBB03	254	102
FBB04	457	102
FBB05	635	102

M16 GUARDRAIL BOLT & RECESSED NUT

FBB01-05*

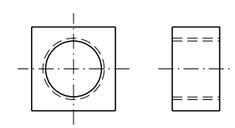

M20 SQUARE NUT

FNS20*

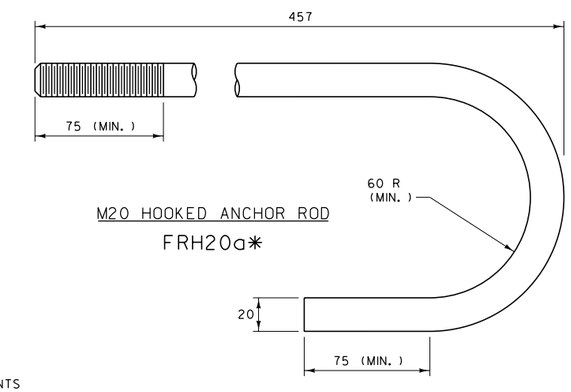

M20 HOOKED ANCHOR ROD

FRH20a*

NOTES:

① FURNISH BOLTS AND ANCHOR RODS MEETING THE REQUIREMENTS OF SUBSECTION 705.01.1.

② FURNISH HIGH STRENGTH BOLTS MEETING THE REQUIREMENTS OF SUBSECTION 711.06.

③ GALVANIZE BOLTS, NUTS AND WASHERS IN ACCORDANCE WITH SUBSECTION 705.01.1.

* SEE DTL. DWG. NO. 606-80 FOR SCHEDULE OF GUARDRAIL HARDWARE.

ALL DIMENSIONS ARE MILLIMETERS (mm) UNLESS OTHERWISE NOTED.

DETAILED DRAWING

REFERENCE STANDARD SPEC. SECTION 606, 705, 711

DWG. NO. 606-82

GUARDRAIL HARDWARE

EFFECTIVE: SEPTEMBER 2014

MDT MONTANA DEPARTMENT OF TRANSPORTATION

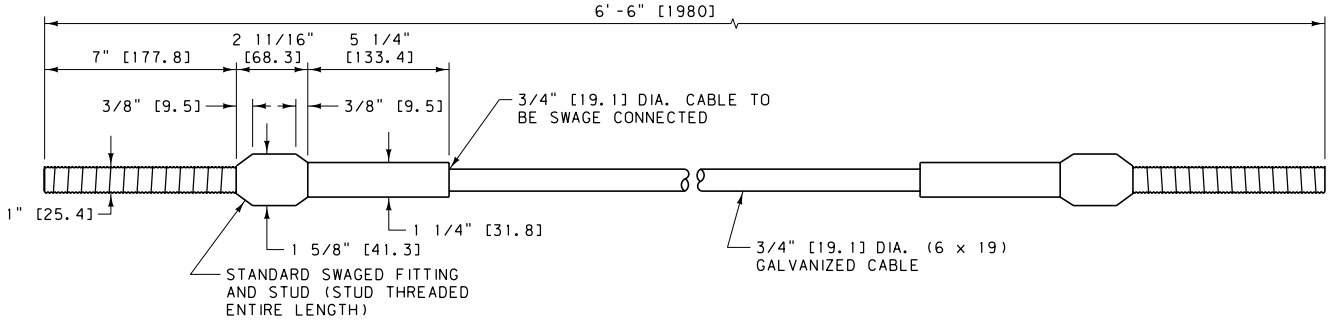

NOTES:

① FOR RELATED FASTENER HARDWARE SEE FWC24a*, FNX24a* AND FPA01*.

② MACHINE THE SWAGED FITTING FROM HOT-ROLLED CARBON STEEL CONFORMING TO THE REQUIREMENTS OF ASTM A576 [A576 M], GRADE 1035, AND ANNEAL SUITABLE FOR COLD SWAGING. GALVANIZE THE SWAGED FITTING IN ACCORDANCE WITH SUBSECTION 711.08 BEFORE SWAGING. DRILL A LOCK PIN HOLE TO ACCOMMODATE A 1/4" [6.4 mm], PLATED SPRING STEEL PIN THROUGH THE HEAD OF THE SWAGED FITTING TO RETAIN THE STUD IN THE PROPER POSITION.

③ THE SWAGED FITTING, STUD AND NUT (FNX24a*) MUST DEVELOP THE BREAKING STRENGTH OF THE WIRE ROPE.

④ WIRE ROPE IS TO CONFORM TO THE REQUIREMENTS OF AASHTO M30 [M30M] AND BE 3/4" [19.1 mm] PREFORMED, 6 x 19, WIRE STRAND CORE OR INDEPENDENT WIRE ROPE CORE (IWRC), GALVANIZED, RIGHT REGULAR LAY, MANUFACTURED OF IMPROVED PLOW STEEL WITH A MINIMUM BREAKING STRENGTH OF 42,800 POUNDS [190.4 kN].

⑤ THE STUD IS TO CONFORM TO THE REQUIREMENTS OF ASTM F568 [F568M] CLASS 8.8 AND BE GALVANIZED IN ACCORDANCE WITH AASHTO M232 [M232M] (ASTM A153 [153M]). PRIOR TO GALVANIZING, MILL A 3/8" [9.5 mm] SLOT INTO THE STUD END FOR THE LOCKING PIN.

CABLE ASSEMBLY

FCA01*

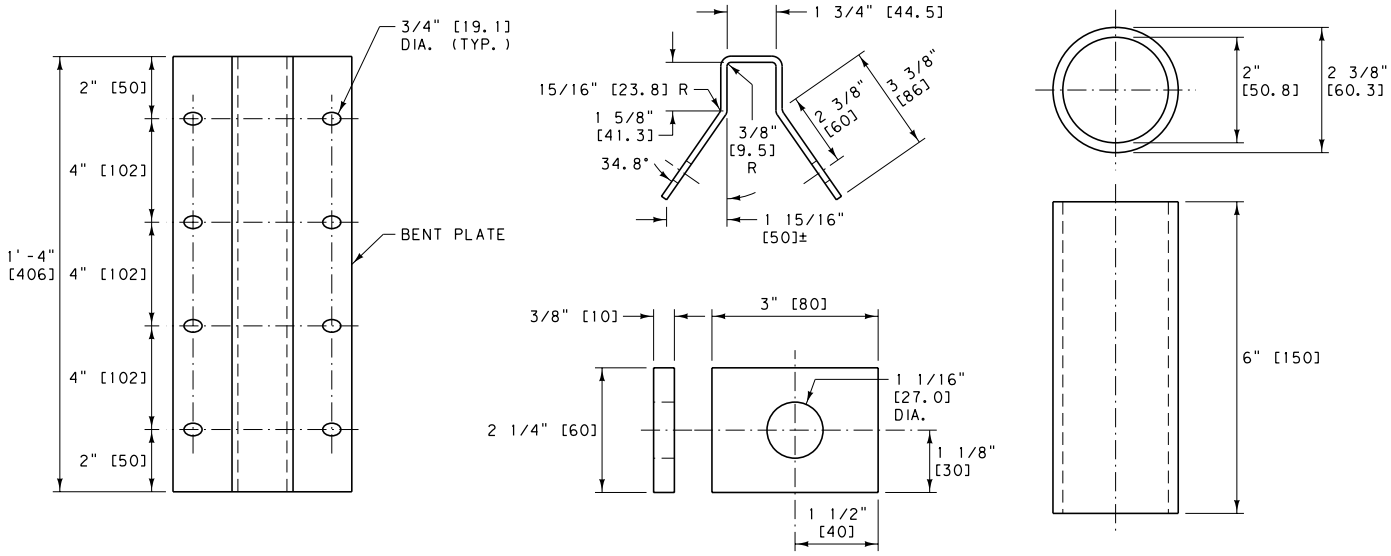

ANCHOR BRACKET & END PLATE

FPA01*

POST SLEEVE

FMM02*

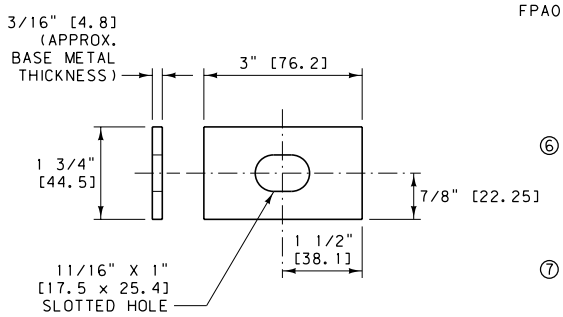

RECTANGULAR PLATE WASHER

FWR03*

NOTES:

⑥ ANCHOR BRACKETS, END PLATES AND RECTANGULAR PLATE WASHERS ARE TO CONFORM TO THE REQUIREMENTS OF AASHTO M270 [M270M] (ASTM A709 [A709M]) GRADE 36 [250] STEEL PLATE. POST SLEEVES ARE TO CONFORM TO THE REQUIREMENTS OF ASTM A53 [A53M] GRADE B.

⑦ GALVANIZE FABRICATED PARTS IN ACCORDANCE WITH SUBSECTION 711.08. DO NOT PUNCH, DRILL, OR CUT AFTER GALVANIZING.

* SEE DTL. DWG. NO. 606-80 FOR SCHEDULE OF GUARDRAIL HARDWARE.

UNITS SHOWN IN BRACKETS [] ARE METRIC AND ARE IN MILLIMETERS (mm) UNLESS OTHER UNITS ARE SHOWN.

DETAILED DRAWING	
REFERENCE STANDARD SPEC. SECTION 606, 711	DWG. NO. 606-84
W-BEAM METAL GUARDRAIL HARDWARE	
EFFECTIVE: SEPTEMBER 2014	
MDT MONTANA DEPARTMENT OF TRANSPORTATION	

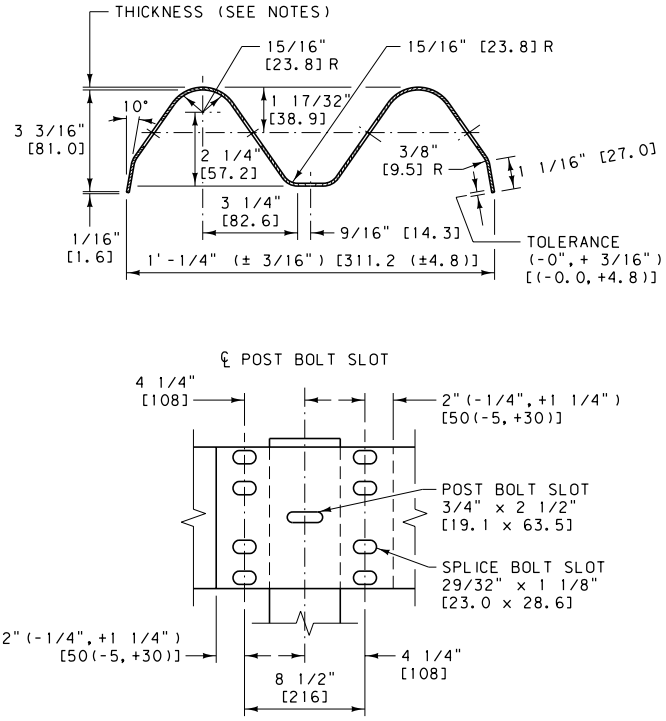

W-BEAM

RWM02a-b✱ (12'-6" [3.81 m] LENGTH) OR RWM22a-b✱ (25'-0" [7.62 m] LENGTH)

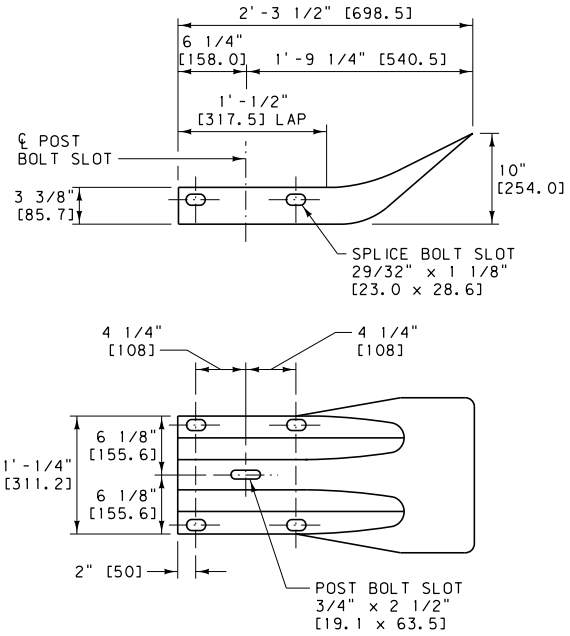

W-BEAM END SECTION (FLARED)

RWE01a-b✱

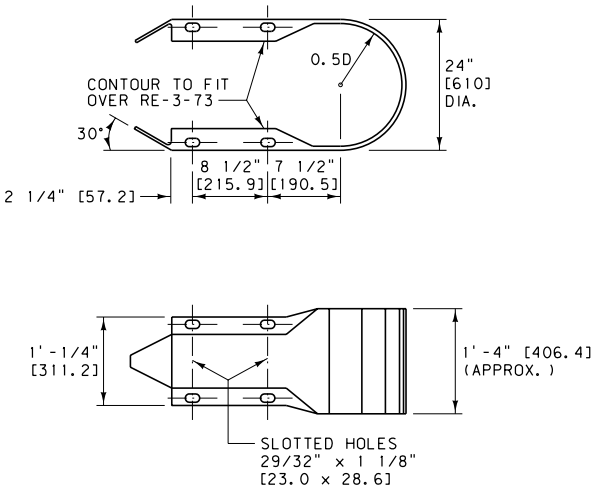

W-BEAM END SECTION (BUFFER)

RWE06a-b✱

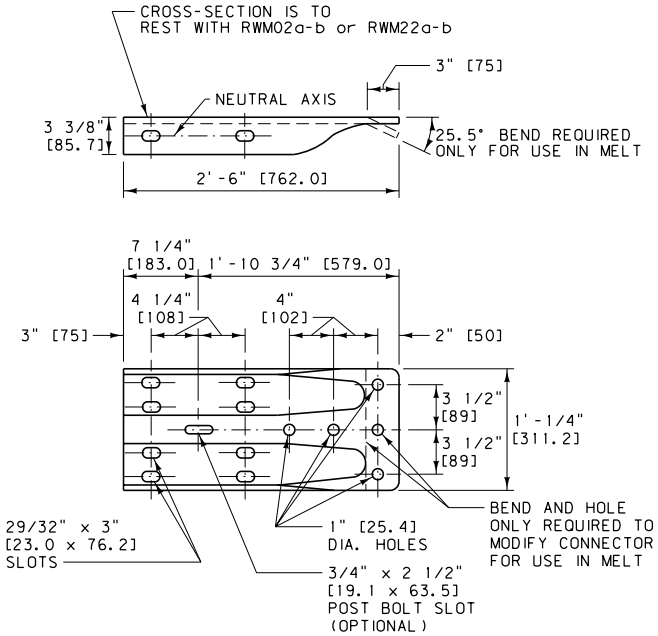

W-BEAM TERMINAL CONNECTOR

RWE02a-b✱

NOTES:

✱ DESTINATION SUFFIX	METAL THICKNESS
a	12 GAUGE [2.7 mm]
b	10 GAUGE [3.5 mm]

✱ SEE DTL. DWG. NO. 606-80 FOR SCHEDULE OF GUARDRAIL HARDWARE.

UNITS SHOWN IN BRACKETS [] ARE METRIC AND ARE IN MILLIMETERS (mm) UNLESS OTHER UNITS ARE SHOWN.

DETAILED DRAWING

REFERENCE STANDARD SPEC. SECTION 606

DWG. NO. 606-88

W-BEAM METAL GUARDRAIL HARDWARE

EFFECTIVE: SEPTEMBER 2014

MDT MONTANA DEPARTMENT OF TRANSPORTATION

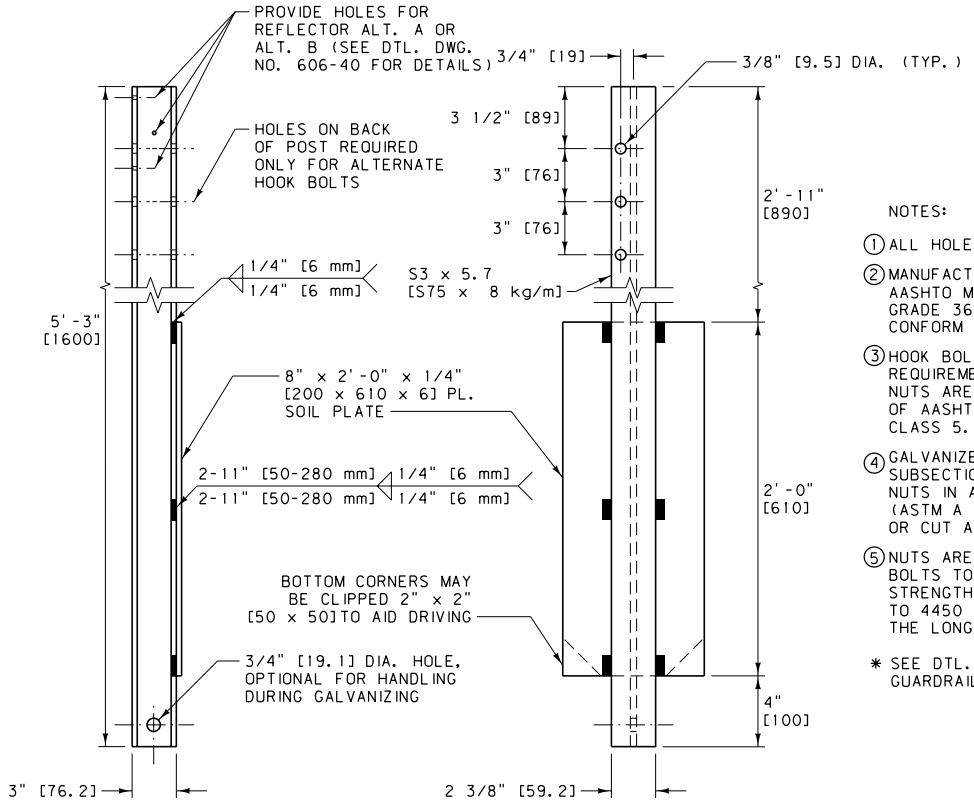

NOTES:

1. ALL HOLES ARE 3/8" [9.5] DIA. EXCEPT AS NOTED.
2. MANUFACTURE POSTS AND SOIL PLATES USING AASHTO M 270 [270M] (ASTM A 709 [A709M]) GRADE 36 [250] STEEL. ALL WELDING IS TO CONFORM TO THE APPLICABLE AWS CODE.
3. HOOK BOLTS ARE TO CONFORM TO THE REQUIREMENTS OF ASTM 568 [568M] CLASS 4.6. NUTS ARE TO CONFORM TO THE REQUIREMENTS OF AASHTO M 291 [291M] (ASTM A 563 [A563M]) CLASS 5.
4. GALVANIZE FABRICATED PARTS IN ACCORDANCE WITH SUBSECTION 711.08. GALVANIZE HOOK BOLTS AND NUTS IN ACCORDANCE WITH AASHTO M 232 [232M] (ASTM A 153 [A153M]). DO NOT PUNCH, DRILL, OR CUT AFTER GALVANIZING.
5. NUTS ARE OF THE HEAVY HEX TYPES. INSTALL BOLTS TO DEVELOP AN ULTIMATE PULL OPEN STRENGTH FROM 500 LB. TO 1000 LB. [2225 N TO 4450 N] APPLIED IN A DIRECTION NORMAL TO THE LONGITUDINAL AXIS OF THE POST.

* SEE DTL. DWG. NO. 606-80 FOR SCHEDULE OF GUARDRAIL HARDWARE.

CABLE GUARDRAIL POST AND SOIL PLATE

PSE01* AND PLS01*

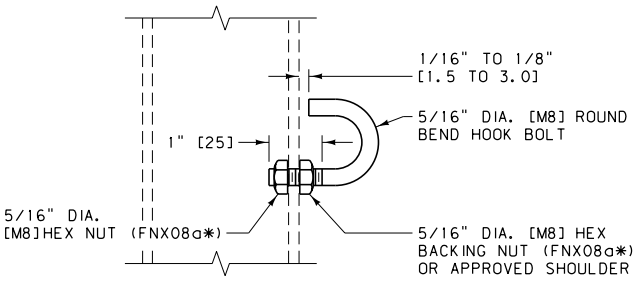

5/16" DIA. [M8] HOOK BOLT

FBH01*

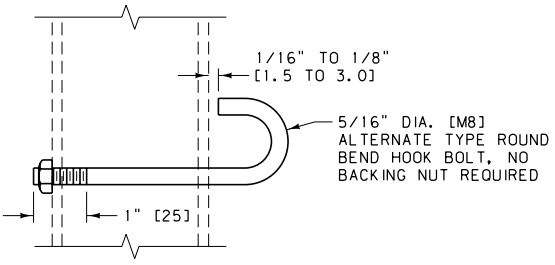

ALTERNATE 5/16" DIA. [M8] HOOK BOLT

FBH02*

UNITS SHOWN IN BRACKETS [] ARE METRIC AND ARE IN MILLIMETERS (mm) UNLESS OTHER UNITS ARE SHOWN.

DETAILED DRAWING	
REFERENCE STANDARD SPEC. SECTION 606	DWG. NO. 606-92
CABLE GUARDRAIL HARDWARE	
EFFECTIVE: SEPTEMBER 2014	
MDT MONTANA DEPARTMENT OF TRANSPORTATION	

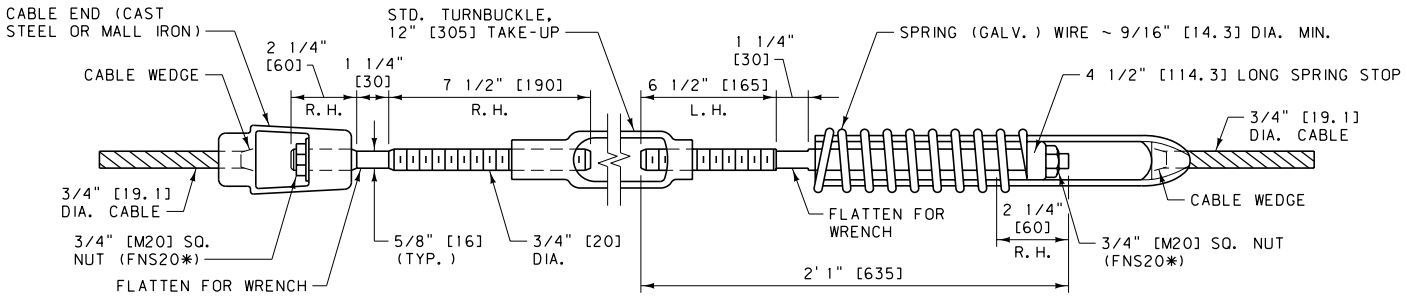

COMPENSATING CABLE END ASSEMBLY

RCE01*

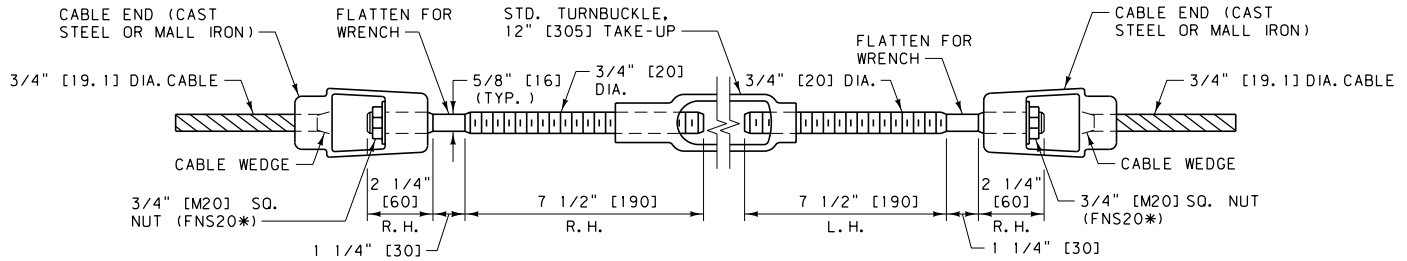

TURNBUCKLE CABLE END ASSEMBLY

R. H. = RIGHT HAND
L. H. = LEFT HAND

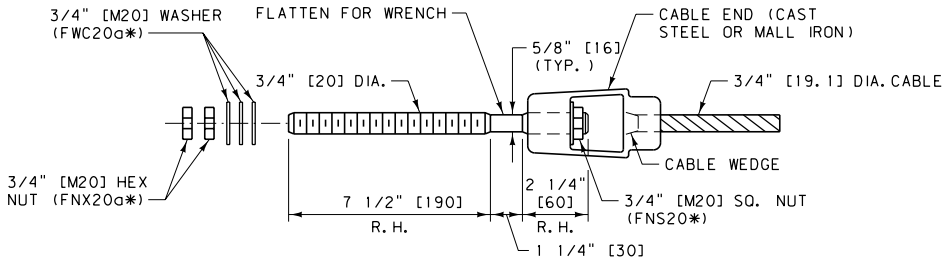

CABLE END ASSEMBLY

RCE03*

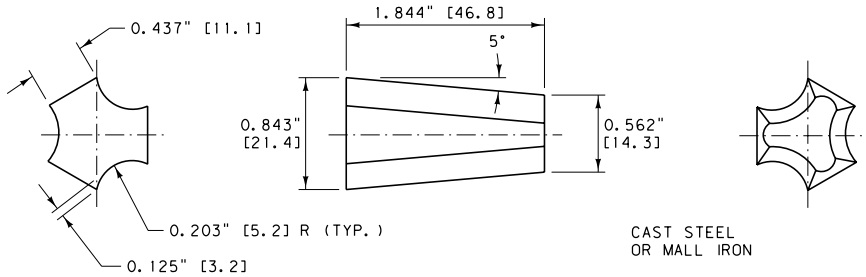

CABLE WEDGE

FMM01*

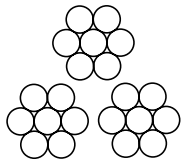

3/4" [19.1] DIA. - 3 x 7 WIRE ROPE

3/4" [19.1] DIA. CABLE

RCM01*

NOTES:

1. WIRE ROPE AND CONNECTING HARDWARE ARE TO CONFORM TO THE REQUIREMENTS OF AASHTO M30 [M30M] TYPE 1 CLASS A, 3/4" [19.1] ROPE. CONNECTING HARDWARE MUST DEVELOP THE FULL STRENGTH OF A SINGLE CABLE (25,000 LB [111.2 kN]). CAST STEEL COMPONENTS ARE TO CONFORM TO THE REQUIREMENTS OF AASHTO M103 [M103M] (ASTM A27 [A27M]). MALLEABLE IRON CASTINGS ARE TO CONFORM TO THE REQUIREMENTS OF ASTM A47 [A47M].

2. AT ALL LOCATIONS WHERE THE CABLE IS CONNECTED TO A CABLE SOCKET WITH A WEDGE TYPE CONNECTION, CRIMP ONE WIRE OF THE CABLE OVER THE BASE OF THE WEDGE TO HOLD IT FIRMLY IN PLACE.

3. COMPENSATING DEVICES ARE TO HAVE SPRING CONSTANTS OF 450 POUNDS PER INCH [78.8 N/mm], PLUS OR MINUS 50 POUNDS PER INCH [8.8 N/mm], AND PERMIT A TRAVEL OF 6 INCHES [150] PLUS OR MINUS 1 INCH [25].

4. DESIGN SOCKET BASKETS FOR USE WITH THE WEDGE DETAILED IN THIS DRAWING.

5. ALTERNATE HARDWARE DESIGNS WILL BE CONSIDERED FOR APPROVAL PROVIDED THEIR CONNECTION DETAILS, FOR THE PURPOSE OF MAINTENANCE SUBSTITUTIONS, ARE COMPATIBLE WITH THE DETAILS OF THIS DRAWING AND THEIR OPERATING CHARACTERISTICS ARE SIMILAR TO THOSE OF THE HARDWARE IN THIS DRAWING.

* SEE DTL. DWG. NO. 606-80 FOR SCHEDULE OF GUARDRAIL HARDWARE.

UNITS SHOWN IN BRACKETS [] ARE METRIC AND ARE IN MILLIMETERS (mm) UNLESS OTHER UNITS ARE SHOWN.

DETAILED DRAWING	
REFERENCE STANDARD SPEC. SECTION 606	DWG. NO. 606-94
CABLE GUARDRAIL HARDWARE	
EFFECTIVE: SEPTEMBER 2014	
MDT MONTANA DEPARTMENT OF TRANSPORTATION	

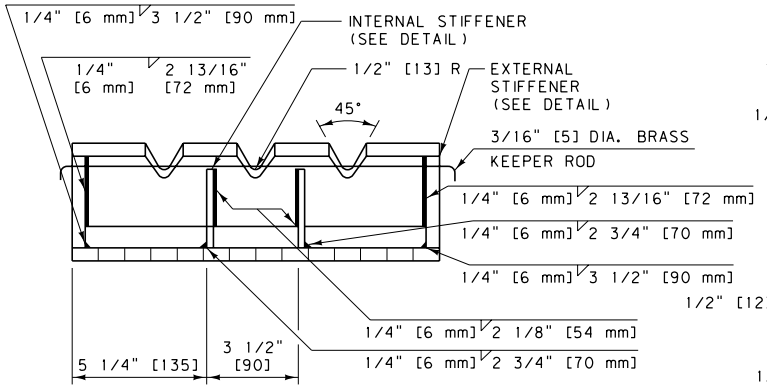

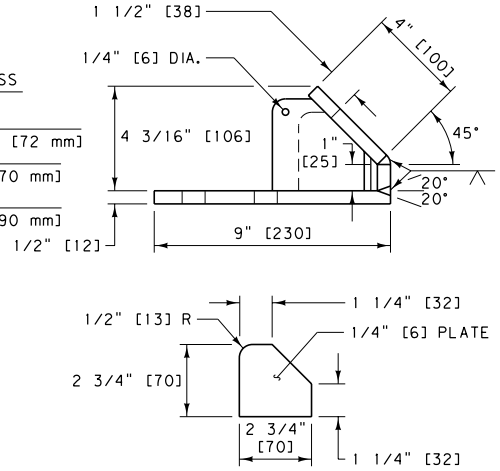

INTERNAL STIFFENER

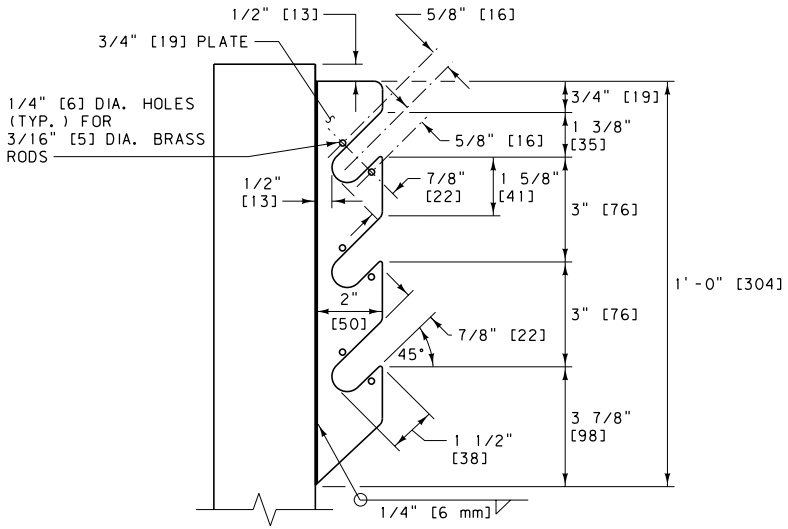

CABLE SUPPORT DETAIL

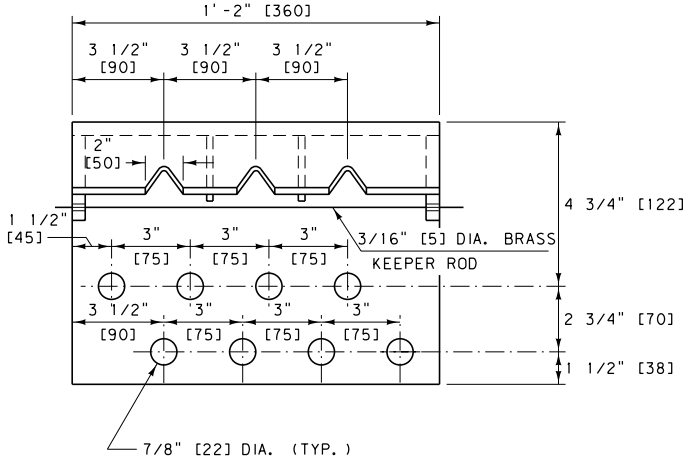

CABLE ANCHOR BRACKET

FPA02*

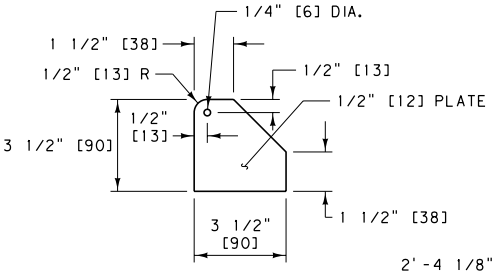

EXTERNAL STIFFENER

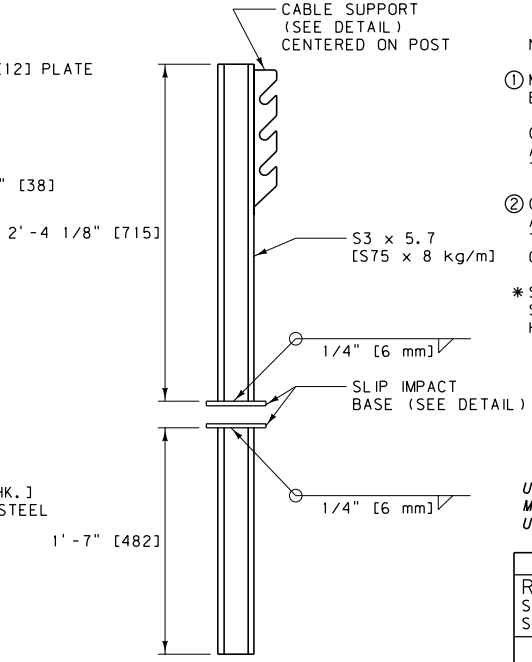

CABLE GUARDRAIL ANCHOR POST

PSE06*

NOTES:

1. MANUFACTURE ANCHOR POSTS AND BRACKETS USING AASHTO M 270 [270M] (ASTM A709 [A709M]) GRADE 36 [250]STEEL. ALL WELDING IS TO CONFORM TO THE APPLICABLE AWS CODE.
2. GALVANIZE FABRICATED PARTS IN ACCORDANCE WITH SUBSECTION 711.08. DO NOT PUNCH, DRILL, OR CUT AFTER GALVANIZING.

* SEE DTL. DWG. NO. 606-80 FOR SCHEDULE OF GUARDRAIL HARDWARE.

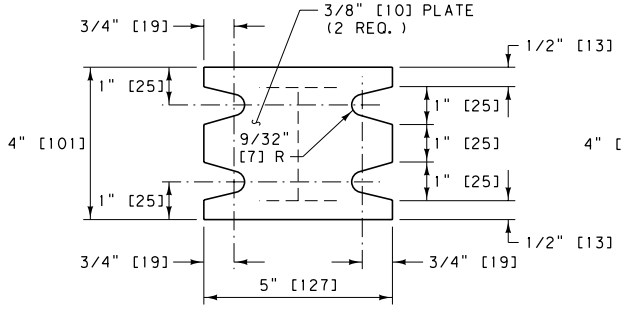

SLIP IMPACT BASE

(KEEPER PLATE NOT SHOWN)

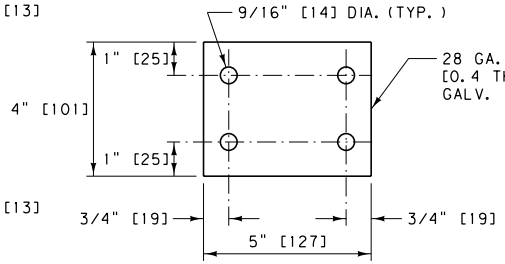

KEEPER PLATE

UNITS SHOWN IN BRACKETS [] ARE METRIC AND ARE IN MILLIMETERS (mm) UNLESS OTHER UNITS ARE SHOWN.

DETAILED DRAWING	
REFERENCE STANDARD SPEC. SECTION 606	DWG. NO. 606-95
CABLE GUARDRAIL HARDWARE	
EFFECTIVE: SEPTEMBER 2014	

MDT MONTANA DEPARTMENT OF TRANSPORTATION

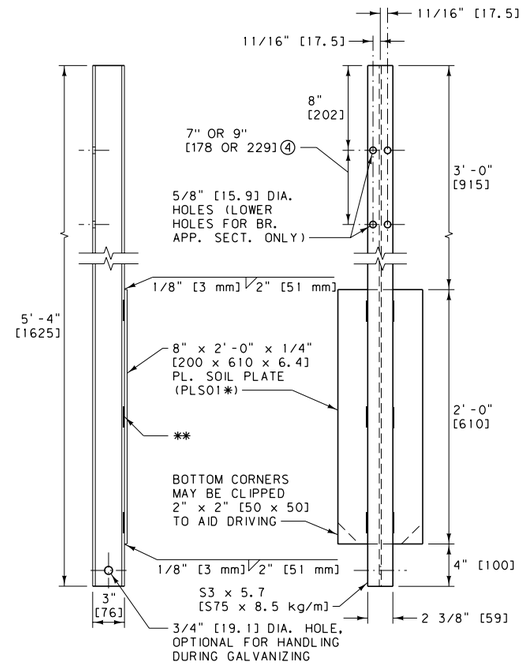

TYPE A BOX BEAM POST AND SOIL PLATE

PSE08✱ AND PLS01✱

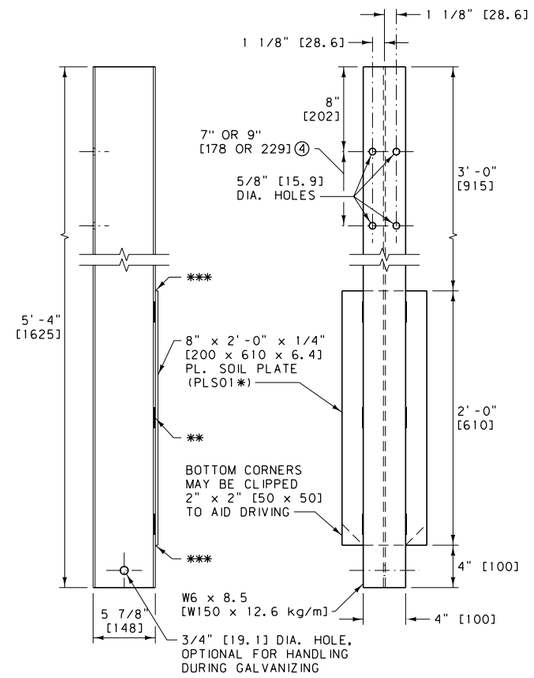

TYPE B BOX BEAM POST AND SOIL PLATE

PLS01✱

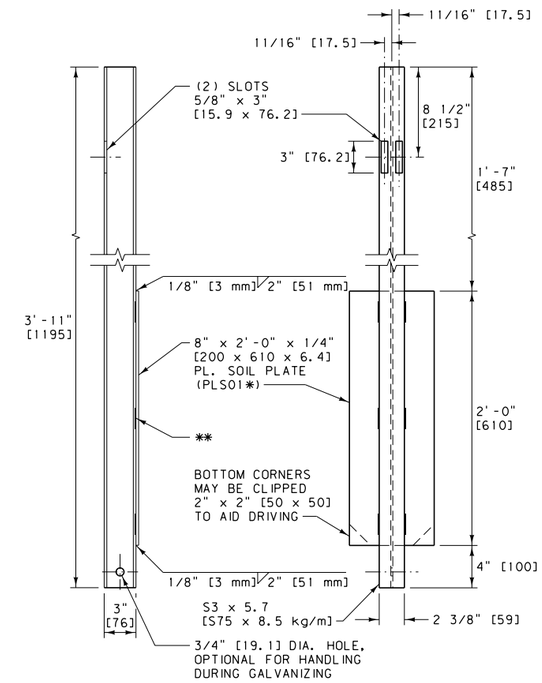

TYPE D BOX BEAM POST AND SOIL PLATE

PSE05✱ AND PLS01✱

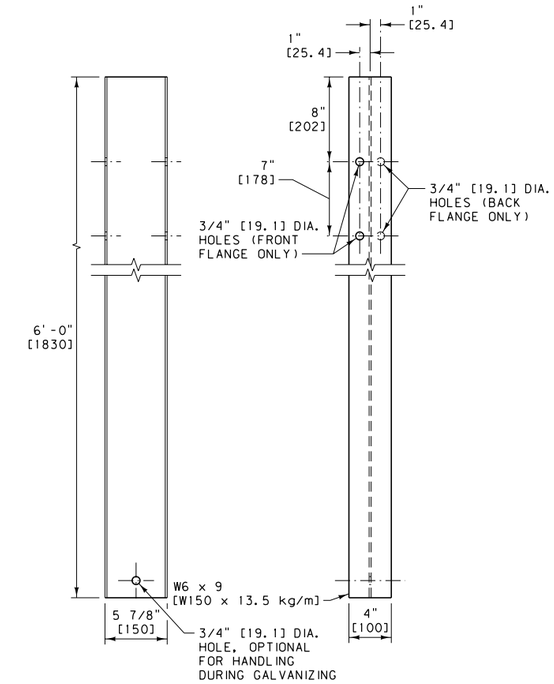

TRANSITION POST

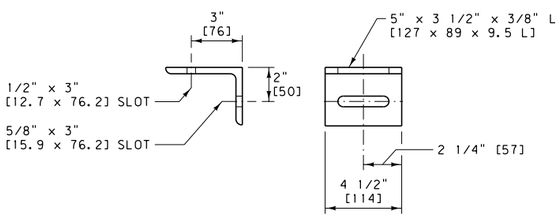

BOX BEAM SUPPORT BRACKET

FPP01✱

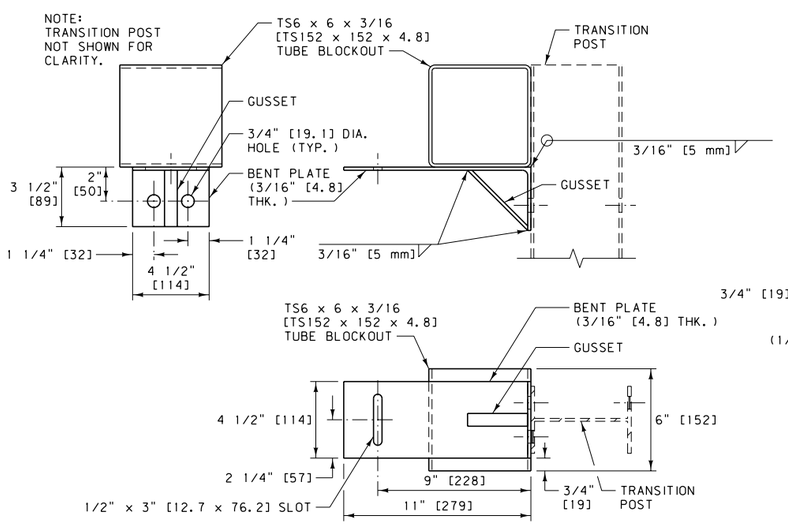

SUPPORT BRACKET W/BLOCKOUT

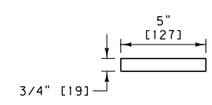

GUSSET

(1/8" [3.2] STEEL PLATE)

NOTES:

① MANUFACTURE POSTS USING STEEL CONFORMING TO AASHTO M 183 [183M] (ASTM A 36 [36M]). MANUFACTURE SOIL PLATES, SUPPORT BRACKETS AND MISC. COMPONENTS USING AASHTO M 270 [270M] (ASTM A 709 [709M]) GRADE 36 [250] STEEL. ALL WELDING IS TO CONFORM TO THE APPLICABLE AWS CODE.

② MANUFACTURE BLOCKOUTS FROM EITHER ASTM A 500 GRADE B COLD-ROLLED TUBING, ASTM A 501 HOT-ROLLED TUBING OR AUTOMOTIVE ROLLOVER PROTECTIVE STEEL (ROPS). WHEN ASTM A 500 GRADE B STEEL IS USED, TEST THE MATERIAL PER ASTM E 436.

③ GALVANIZE FABRICATED POSTS, BLOCKOUTS, BRACKETS AND MISC. COMPONENTS IN ACCORDANCE WITH SUBSECTION 711.08. DO NOT PUNCH, DRILL, OR CUT AFTER GALVANIZING.

④ SEE DTL. DWG. NO. 606-53 (BOX BEAM BR. APP. SECT.) FOR REQUIRED LOCATION OF LOWER HOLES IN TYPE A AND B POSTS.

✱ SEE DTL. DWG. NO. 606-80 FOR SCHEDULE OF GUARDRAIL HARDWARE.

✱✱ 1/8" [3 mm] 2-10" [51-254 mm]
1/8" [3 mm] 2-10" [51-254 mm]

✱✱✱ 1/8" [3 mm] 3 1/2" [89 mm]

UNITS SHOWN IN BRACKETS [] ARE METRIC AND ARE IN MILLIMETERS (mm) UNLESS OTHER UNITS ARE SHOWN.

DETAILED DRAWING	
REFERENCE STANDARD SPEC. SECTION 606	DWG. NO. 606-97
BOX BEAM GUARDRAIL HARDWARE	
EFFECTIVE: SEPTEMBER 2014	

MDT MONTANA DEPARTMENT OF TRANSPORTATION

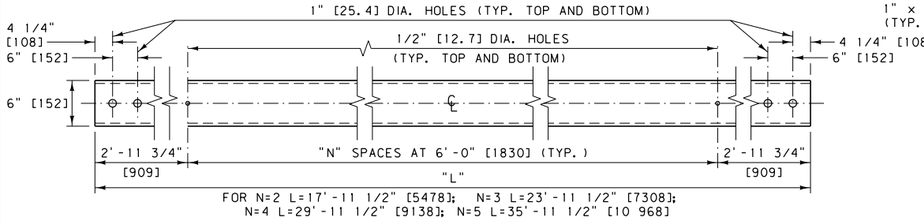

BOX BEAM RAIL (TS6 x 6 x 3/16 [TS152 x 152 x 4.8])

RBM01✳

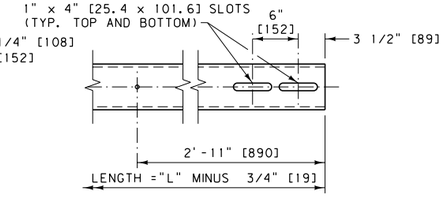

BOX BEAM EXPANSION SPLICE END

ONE END OF BOX BEAM RAIL ONLY. REQUIRED FOR BOTH RAILS AT THE EXPANSION SPLICE.

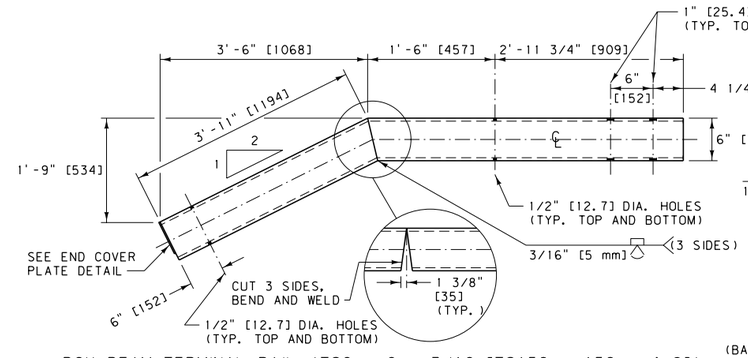

BOX BEAM TERMINAL RAIL (TS6 x 6 x 3/16 [TS152 x 152 x 4.8])

RBM05✳

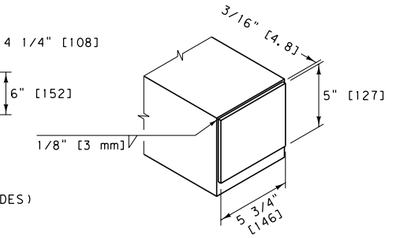

END COVER PLATE DETAIL

(BAR 5" x 3/16" x 0'-5 3/4" [127 x 4.8 x 146])

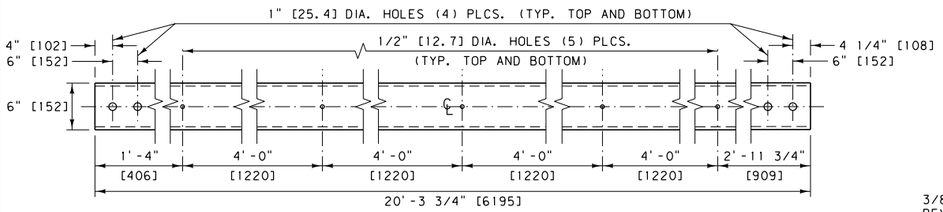

TS6 x 6 x 3/16 [TS152 x 152 x 4.8] BR. APP. SECT. UPPER RAIL NO. 1

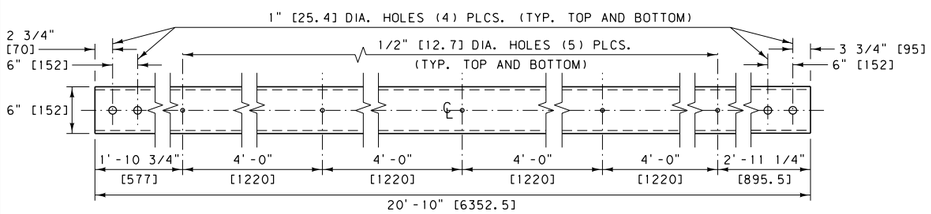

TS6 x 2 x 1/4 [TS152 x 51 x 6.4] BR. APP. SECT. LOWER RAIL NO. 1

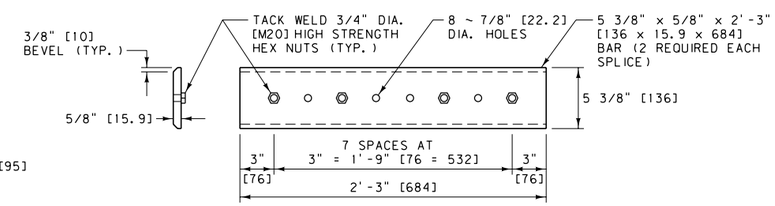

BOX BEAM SPLICE PLATE

RBS01✳

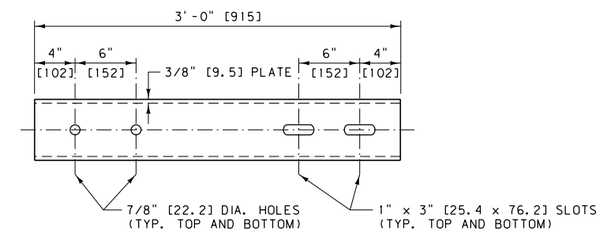

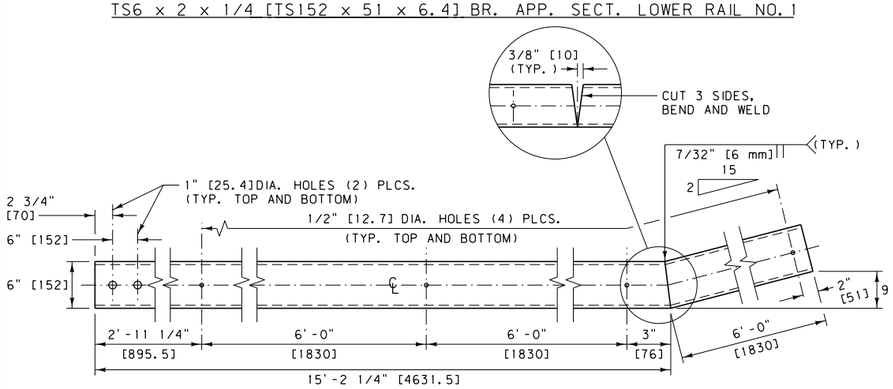

TS6 x 2 x 1/4 [TS152 x 51 x 6.4] BR. APP. SECT. LOWER RAIL NO. 2

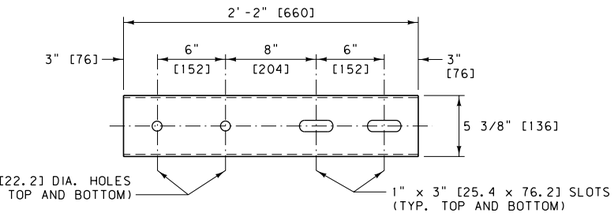

TS6 x 2 [TS152 x 51] CONNECTION SLEEVE

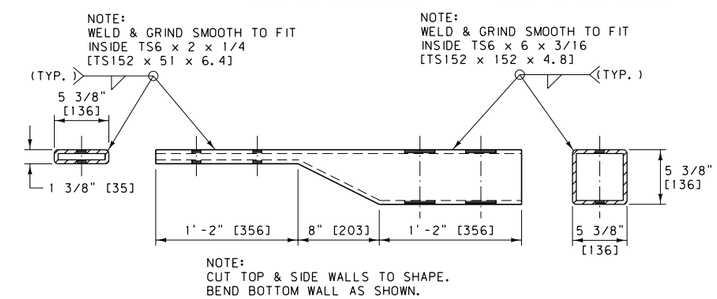

TS6 x 2 TO TS6 x 6 [TS152 x 51 TO TS152 x 152] CONNECTION SLEEVE

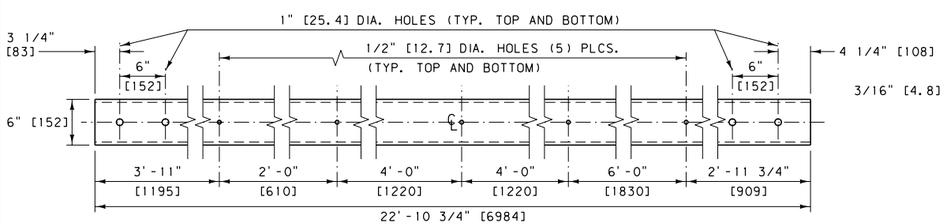

TRANSITION RAIL (TS6 x 6 x 3/16 [TS152 x 152 x 4.8])

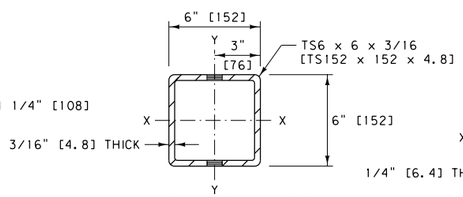

TS6 x 6 x 3/16 [TS152 x 152 x 4.8] SECTION VIEW

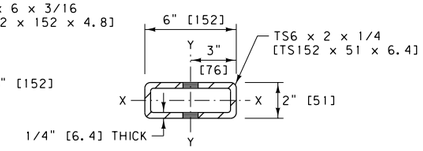

TS6 x 2 x 1/4 [TS152 x 51 x 6.4] SECTION VIEW

NOTES:

1. MANUFACTURE BOX BEAM RAIL ELEMENTS FROM EITHER ASTM A 500 GRADE B COLD ROLLED TUBING, ASTM A 501 HOT-ROLLED TUBING OR AUTOMOTIVE ROLLOVER PROTECTIVE STEEL (ROPS). WHEN ASTM A 500 GRADE B STEEL IS USED, TEST THE MATERIAL PER ASTM E 436.
2. FABRICATE SPLICE PLATES AND CONNECTION SLEEVES FROM AASHTO M 270 [270M] (ASTM A 709 [709M]) GRADE 36 [250] STEEL PLATE. THE NUTS ARE TO BE PLAIN UN-COATED 3/4" DIA. [M20] HIGH STRENGTH HEX NUTS. WELD THE NUTS TO THE PLATES IN ACCORDANCE WITH THE APPLICABLE AWS CODE.
3. GALVANIZE FABRICATED RAIL, CONNECTION SLEEVES, AND SPLICE PLATES IN ACCORDANCE WITH SUBSECTION 711.08. DO NOT PUNCH, DRILL, OR CUT AFTER GALVANIZING.

✳ SEE DTL. DWG. NO. 606-80 FOR SCHEDULE OF GUARDRAIL HARDWARE.

UNITS SHOWN IN BRACKETS [] ARE METRIC AND ARE IN MILLIMETERS (mm) UNLESS OTHER UNITS ARE SHOWN.

DETAILED DRAWING	
REFERENCE STANDARD SPEC. SECTION 606, 711	DWG. NO. 606-98
BOX BEAM GUARDRAIL HARDWARE	
EFFECTIVE: SEPTEMBER 2014	

MDT MONTANA DEPARTMENT OF TRANSPORTATION

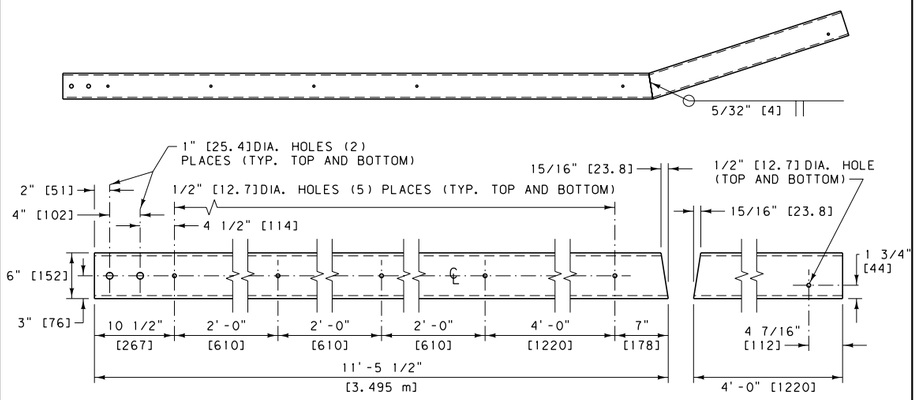

RUB RAIL (TS6 x 2 x 3/16) [TS152 x 51 x 4.8]

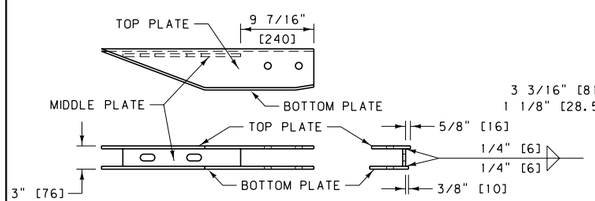

ANCHOR BRACKET FOR RUB RAIL CONNECTION TO JERSEY SHAPE BRIDGE RAIL

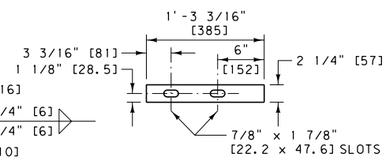

MIDDLE PLATE
(3/8" [9.5] STEEL PLATE)

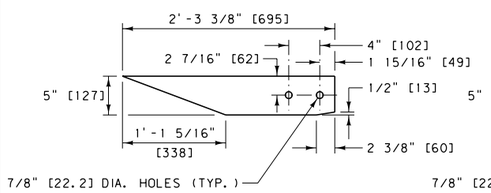

TOP PLATE
(3/8" [9.5] STEEL PLATE)

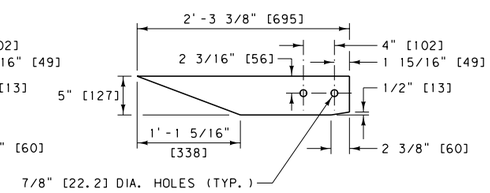

BOTTOM PLATE
(3/8" [9.5] STEEL PLATE)

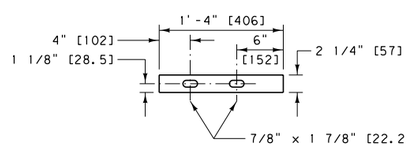

MIDDLE PLATE
(3/8" [9.5] STEEL PLATE)

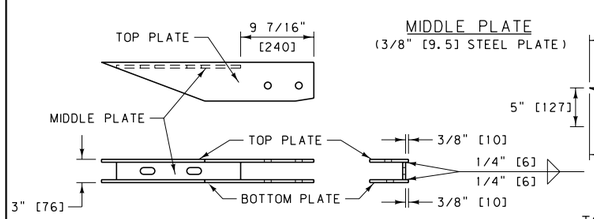

ANCHOR BRACKET FOR RUB RAIL CONNECTION TO VERTICAL CONCRETE BRIDGE RAIL

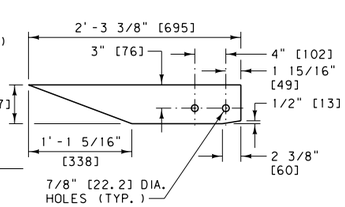

TOP PLATE AND BOTTOM PLATE
(TOP AND BOTTOM PLATES ARE IDENTICAL 3/8" [9.5]STEEL PLATES FOR CONNECTIONS TO VERTICAL SHAPES.)

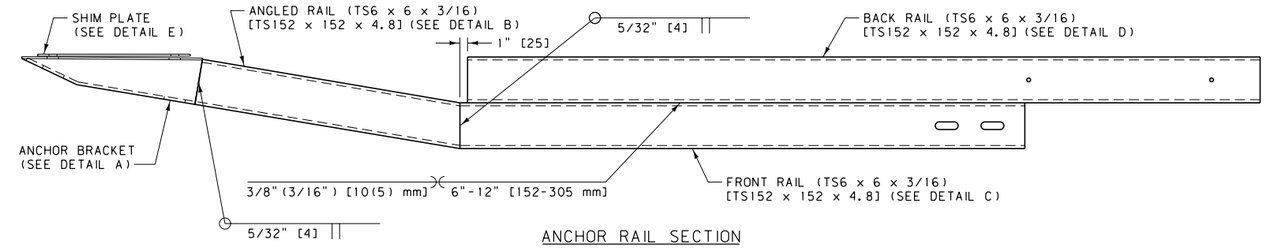

ANCHOR RAIL SECTION

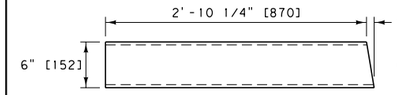

DETAIL B
ANGLED RAIL (TS6 x 6 x 3/16) [TS152 x 152 x 4.8]

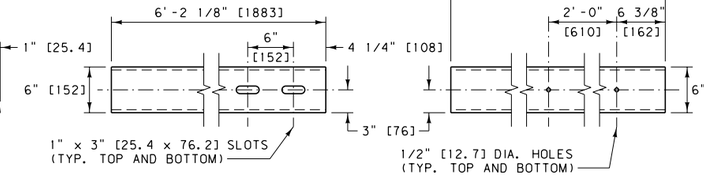

DETAIL C
FRONT RAIL (TS6 x 6 x 3/16) [TS152 x 152 x 4.8]

DETAIL D
BACK RAIL (TS6 x 6 x 3/16) [TS152 x 152 x 4.8]

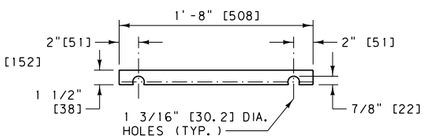

DETAIL E
SHIM PLATE (1/4" [6.4] STEEL PLATE)

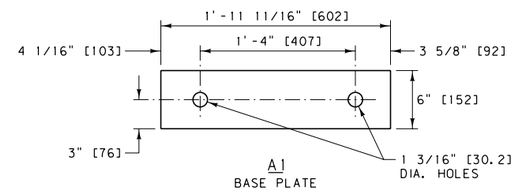

A1
BASE PLATE

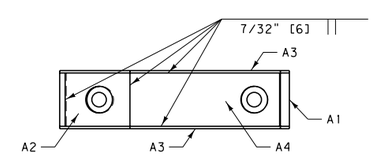

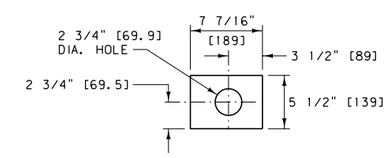

A2
FRONT LEFT PLATE

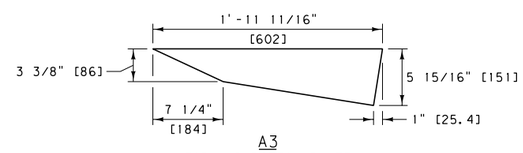

A3
TOP AND BOTTOM PLATE

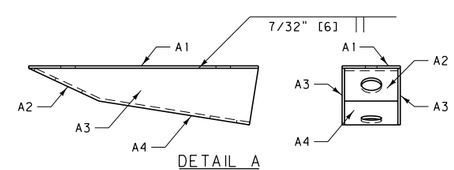

DETAIL A
ANCHOR BRACKET

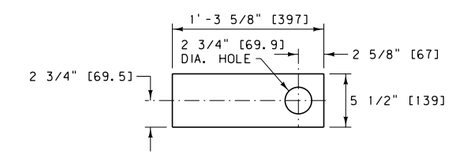

A4
FRONT RIGHT PLATE

NOTE:
ALL ANCHOR BRACKET COMPONENTS ARE FABRICATED FROM 1/4" [6.4] STEEL PLATE MATERIAL.

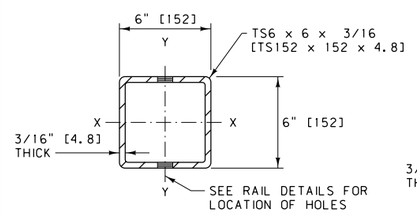

TS6 x 6 x 3/16
[TS152 x 152 x 4.8]
SECTION VIEW

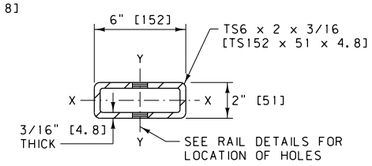

TS6 x 2 x 3/16
[TS152 x 51 x 4.8]
SECTION VIEW

NOTES:

1. MANUFACTURE BOX BEAM RAIL ELEMENTS FROM EITHER ASTM A 500 GRADE B COLD ROLLED TUBING, ASTM A 501 HOT-ROLLED TUBING OR AUTOMOTIVE ROLLOVER PROTECTIVE STEEL (ROPS). WHEN ASTM A 500 GRADE B STEEL IS USED, TEST THE MATERIAL PER ASTM E 436.
2. FABRICATE ANCHOR BRACKET AND RUB RAIL CONNECTION COMPONENTS FROM AASHTO M 270 [270M] (ASTM A 709 [709M]) GRADE 36 [250]STEEL PLATE.
3. GALVANIZE FABRICATED RAIL, ANCHOR BRACKET, AND RUB RAIL IN ACCORDANCE WITH SUBSECTION 711.08. DO NOT PUNCH, DRILL, WELD OR CUT AFTER GALVANIZING.

* SEE DTL. DWG. NO. 606-80 FOR SCHEDULE OF GUARDRAIL HARDWARE.

UNITS SHOWN IN BRACKETS [] ARE METRIC AND ARE IN MILLIMETERS (mm) UNLESS OTHER UNITS ARE SHOWN.

DETAILED DRAWING	
REFERENCE STANDARD SPEC. SECTION 606, 711	DWG. NO. 606-99
BOX BEAM GUARDRAIL HARDWARE	
EFFECTIVE: SEPTEMBER 2014	

MDT MONTANA DEPARTMENT OF TRANSPORTATION

WIRE SPACING TABLE

COMBINATION WOVEN WIRE & BARBED WIRE FENCE			BARBED WIRE FENCE			
48" [1200] FENCE HEIGHT		51" [1280] FENCE HEIGHT	48" [1200] FENCE HEIGHT			
32" [813] WW-2 BW ✱	32" [813] WW-3 BW ✱	39" [990] WW-2 BW ✱	3 BW	4 BW	5 BW	6 BW
TYPE F2-32WW [813WW]	TYPE F3-32WW [813WW]	TYPE F2-39WW [990WW]	TYPE F3	TYPE F4	TYPE F5	TYPE F6
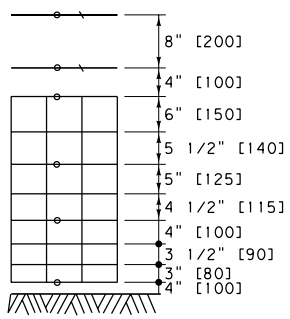	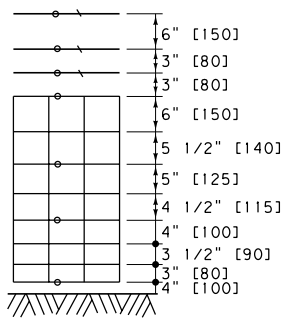	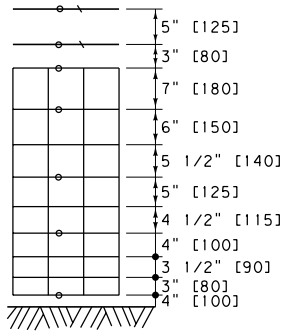	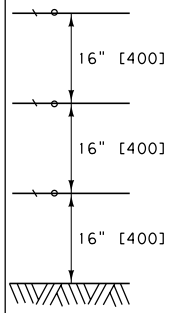	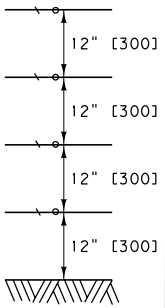	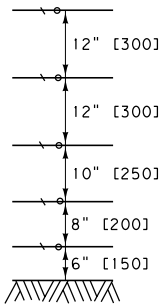	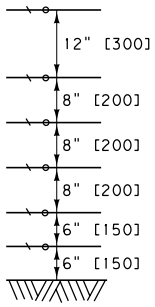

APPROXIMATE WEIGHT OF 32" [813] WOVEN WIRE FABRIC (832-6-12 1/2) PER 20 ROD [100 m] ROLL IS 150 LB. [68 kg] ±10 LB. [5 kg] (NOTE: 12 1/2 GAUGE)

APPROXIMATE WEIGHT OF 39" [990] WOVEN WIRE FABRIC (939-6-12 1/2) PER 20 ROD [100 m] ROLL IS 170 LB. [77 kg] ±10 LB. [5 kg] (NOTE: 12 1/2 GAUGE)

○ DENOTES STAPLE AND/OR TIE LOCATIONS

✱ OTHER WOVEN WIRE HEIGHTS AND NUMBER OF BARBED WIRE COMBINATIONS ARE AVAILABLE.

STAYS

1. USE WIRE STAYS ON ALL FENCES UNLESS WOOD STAYS ARE SPECIFIED.
2. LOCATE STAYS HALFWAY BETWEEN LINE POSTS.
3. WIRE STAYS FOR BARBED WIRE FENCING ARE 2" [50] LONGER THAN THE DISTANCE BETWEEN THE TOP AND BOTTOM WIRES.
4. FOR WOVEN WIRE FENCING WITH BARBED WIRE ON TOP, EXTEND WIRE STAYS 6" [150] MINIMUM BELOW THE TOP OF THE WOVEN WIRE.
5. WHEN WOOD STAYS ARE SPECIFIED, USE EITHER 2" [50] ROUND, A ROUGH DIMENSION 2" x 2" [50 x 50], OR A 1 1/2" x 3 1/2" [37.5 x 87.5] (NOMINAL 2" x 4" [50 x 100]). THE STAY MUST BE OF SUFFICIENT LENGTH TO BE PLACED ON THE GROUND WITH THE TOP OF THE STAY EXTENDING 2" [50] ABOVE THE TOP WIRE. ATTACH EACH WIRE TO THE WOOD STAYS USING 1 3/4" [44] x 9 GAUGE STAPLES. WOOD STAYS DO NOT NEED TO BE TREATED.

NOTES:

1. STAPLE THE BOTTOM, TOP, CENTER AND ALTERNATE WIRES OF WOVEN WIRE TO WOOD LINE POSTS.
2. TIE THE BOTTOM, TOP, CENTER AND ALTERNATE WIRES OF WOVEN WIRE TO STEEL LINE POSTS.
3. STAPLE ALL WIRES OF WOVEN WIRE TO WOOD CORNER POSTS OR POSTS USED TO TIE-OFF WIRE.
4. "M" DENOTES METAL POSTS, IE. TYPE F3M. "W" DENOTES WOOD POSTS, IE. TYPE F4W.
5. SEE DTL. DWG. NO. 607-05, 607-10, AND 607-15 FOR ADDITIONAL FENCING DETAILS.

UNITS SHOWN IN BRACKETS [] ARE METRIC AND ARE IN MILLIMETERS (mm) UNLESS OTHER UNITS ARE SHOWN.

DETAILED DRAWING	
REFERENCE STANDARD SPEC. SECTION 607	DWG. NO. 607-00
FARM FENCE	
EFFECTIVE: SEPTEMBER 2014	

MDT MONTANA DEPARTMENT OF TRANSPORTATION

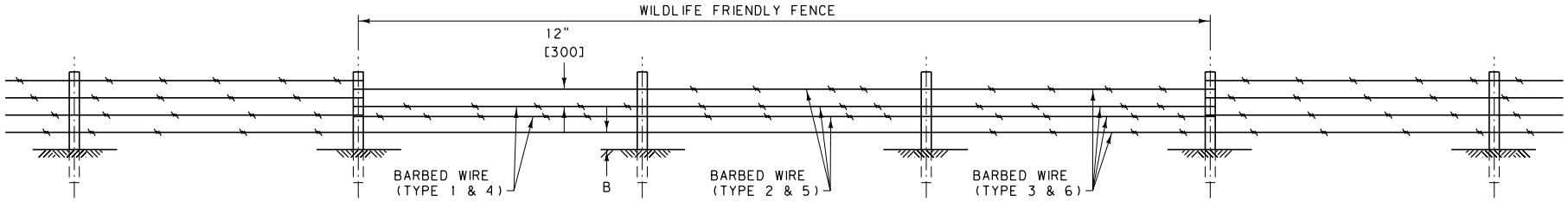

WIRE SPACING TABLE		
WILDLIFE-FRIENDLY FARM FENCE TYPE 1 & 4	WILDLIFE-FRIENDLY FARM FENCE TYPE 2 & 5	WILDLIFE-FRIENDLY FARM FENCE TYPE 3 & 6
42" [1050] FENCE HEIGHT	42" [1050] FENCE HEIGHT	42" [1050] FENCE HEIGHT
WF-2 BW/2 SW-16 & WF-2 BW/2 SW-12	WF-3 BW/1 SW-16 & WF-3 BW/1 SW-12	WF-4 BW-16 & WF-4 BW-12
TYPE WF4-SBBS-16 & TYPE WF4-SBBS-12	TYPE WF4-3BS-16 & TYPE WF4-3BS-12	TYPE WF4-4B-16 & TYPE WF4-4B-12
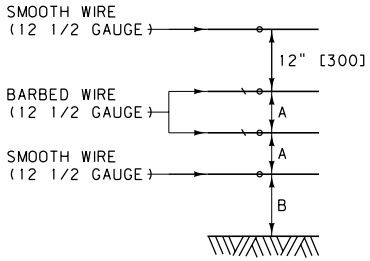	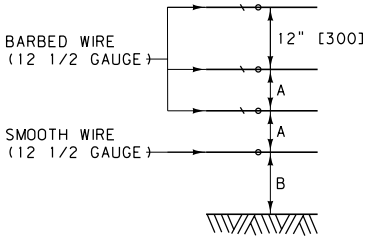	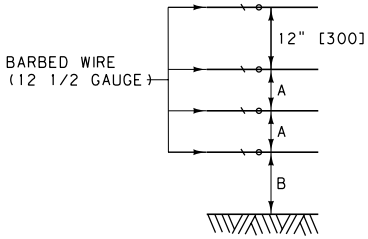

∘ DENOTES STAPLE AND/OR TIE LOCATIONS

BOTTOM WIRE HEIGHT						
WIRE SPACING						
TYPE	1	2	3	4	5	6
A	7" [175]	7" [175]	7" [175]	9" [225]	9" [225]	9" [225]
B	16" [400]	16" [400]	16" [400]	12" [300]	12" [300]	12" [300]

NOTES:

① "M" DENOTES METAL POSTS, IE. TYPE WF4M.
"W" DENOTES WOOD POSTS, IE. TYPE WF4W.

② SEE DTL. DWG. NO. 607-05, 607-10, AND 607-15 FOR ADDITIONAL FENCING DETAILS.

UNITS SHOWN IN BRACKETS [] ARE METRIC AND ARE IN MILLIMETERS (mm) UNLESS OTHER UNITS ARE SHOWN.

DETAILED DRAWING

REFERENCE
STANDARD SPEC.
SECTION 607

DWG. NO.
607-01

WILDLIFE FRIENDLY FENCE

EFFECTIVE: SEPTEMBER 2014

MDT MONTANA DEPARTMENT OF TRANSPORTATION

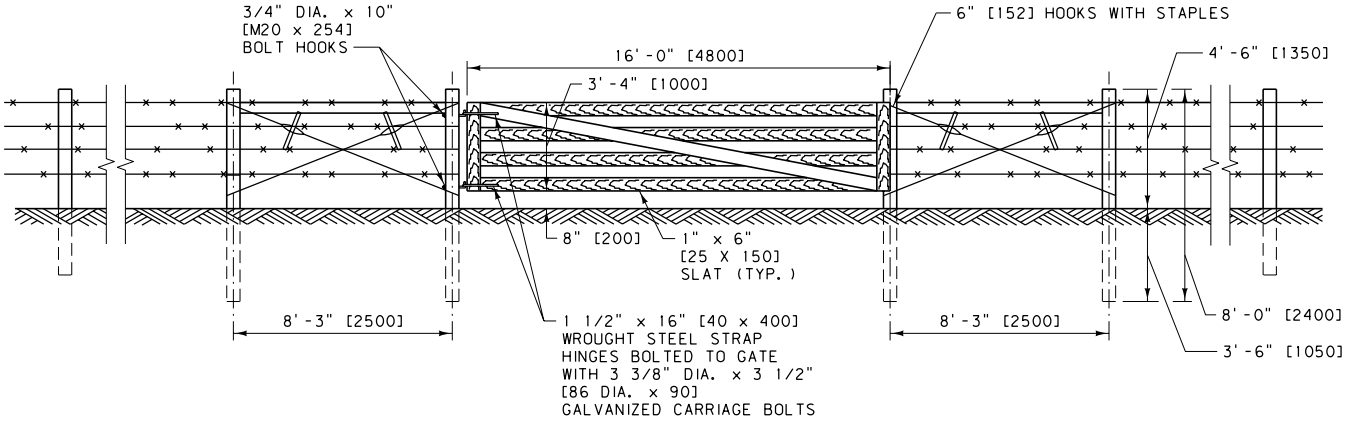

WOOD FARM ENTRANCE GATE (TYPE G-1)

NOTE: USE 10d NAILS AND CLINCH FOR GATE CONSTRUCTION.

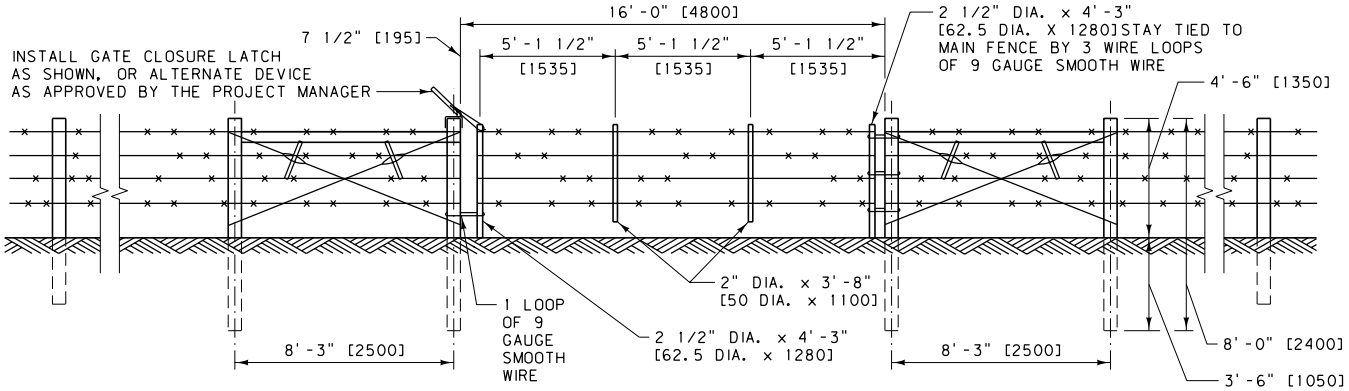

WIRE FARM ENTRANCE GATE (TYPE G-2)

NOTE:
USE SAME WIRE SCHEME ON GATE
AS THAT USED ON FENCE, UNLESS
STATED OTHERWISE IN R/W AGREEMENT.

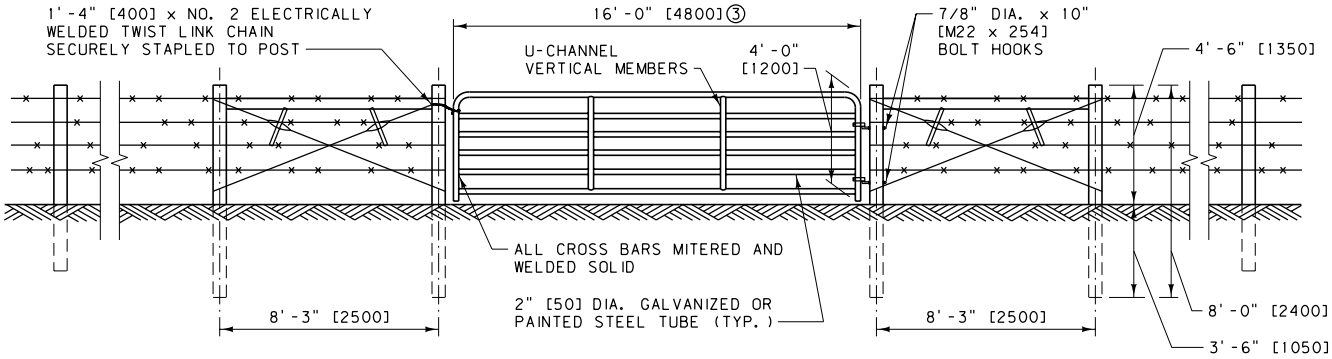

METAL FARM ENTRANCE GATE (TYPE G-3)

NOTES:

① ALL GATES ARE 16'-0" [4800] WIDE UNLESS R/W AGREEMENT STATES OTHERWISE.

② ALL GATES WILL HAVE A SINGLE OR DOUBLE PANEL AT EACH END.

③ TYPE G-3 GATES ARE AVAILABLE IN WIDTHS FROM 4' [1.2 m] TO 20' [6.0 m] IN 2' [0.6 m] INCREMENTS.

UNITS SHOWN IN BRACKETS [] ARE METRIC AND ARE IN MILLIMETERS (mm) UNLESS OTHER UNITS ARE SHOWN.

DETAILED DRAWING	
REFERENCE STANDARD SPEC. SECTION 607	DWG. NO. 607-02
FARM ENTRANCE GATES	
EFFECTIVE: SEPTEMBER 2014	
MDT MONTANA DEPARTMENT OF TRANSPORTATION	

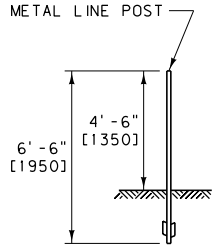

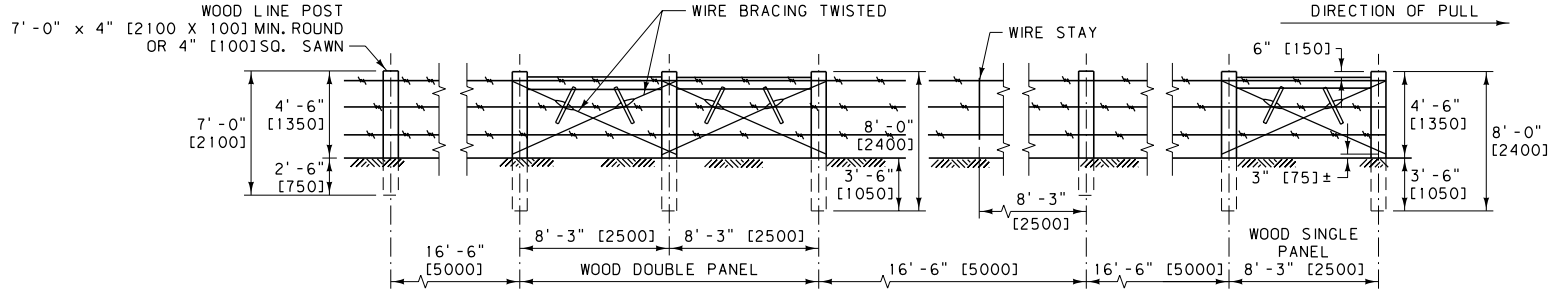

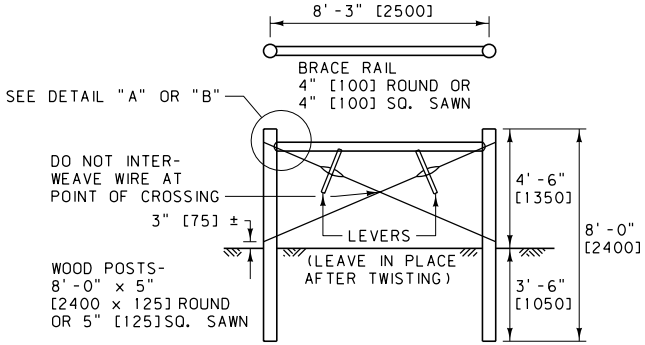

SINGLE WOOD PANEL

FOR PULLING, STRETCHING, CHANGES IN VERTICAL ALIGNMENT OR PANELS ON A RUN OF LESS THAN 330' [100 m].

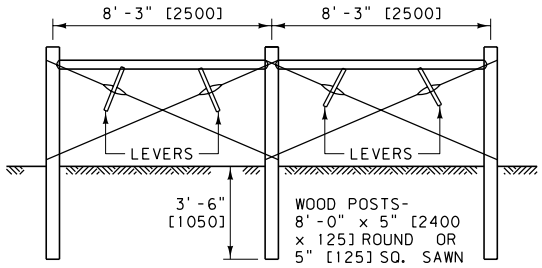

DOUBLE WOOD PANEL

FOR CORNERS, PULLING, STRETCHING, AND CHANGES IN HORIZONTAL ALIGNMENT.

FENCE PANEL

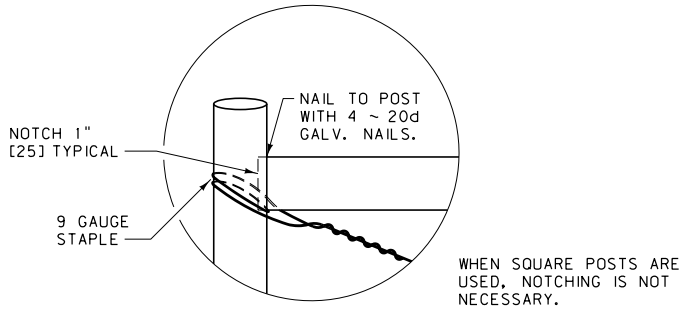

DETAIL "A"

BRACE WIRES - PROVIDE MINIMUM 12 1/2 GAUGE SMOOTH WIRE DOUBLED TO FORM A FOUR WIRE BRACE. ATTACH BRACE WIRES TO POSTS BY WRAPPING AROUND THE POST AT LEAST TWO TIMES AND THEN WRAPPING AROUND ITSELF FIVE TIMES.

LEVERS - 1 1/2" x 2" x 12" [37.5 x 50 x 300] MINIMUM SIZE.

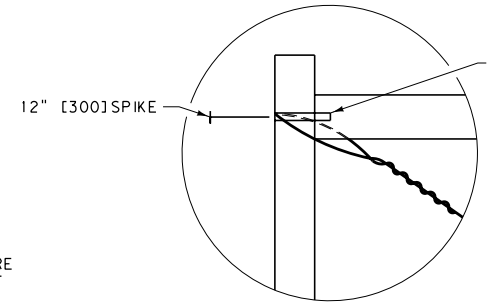

DRIVE 12" x 3/8" [300 x 9.5] DIA. SPIKE THROUGH POST AND 4" [100] INTO BRACE POST.

POSTS ARE NOT NOTCHED. PILOT HOLE DIAMETER IS 5/16" [7.9].

FURNISH AND INSTALL BRACE WIRES AND LEVERS IN ACCORDANCE WITH NOTES ON DETAIL "A".

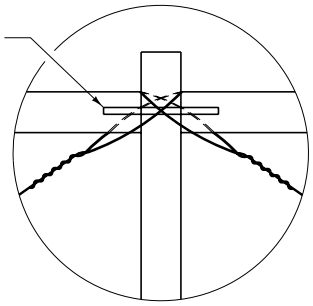

INSTALL A 20" x 3/8" [500 x 9.5] ROD IN THE MIDDLE POST PRIOR TO SETTING THE BRACES. PIN THE BRACES IN PLACE FROM THE OUTSIDE.

DETAIL "B"

ALTERNATE PANEL BRACING

NOTES:

1. SEE THE SPECIFICATIONS FOR POST AND WIRE REQUIREMENTS.
2. LINE POST SPACING IS 16'-6" [5000] CENTER TO CENTER. LINE POST SPACING FROM BRACE OR PANEL POST IS 16'-6" [5000] CENTER TO CENTER.
3. SEE DTL. DWG. NO. 607-00, 607-10 AND 607-15 FOR ADDITIONAL FENCING DETAILS.

UNITS SHOWN IN BRACKETS [] ARE METRIC AND ARE IN MILLIMETERS (mm) UNLESS OTHER UNITS ARE SHOWN.

DETAILED DRAWING	
REFERENCE STANDARD SPEC. SECTION 607	DWG. NO. 607-05
FENCE DETAILS	
EFFECTIVE: SEPTEMBER 2014	

MDT MONTANA DEPARTMENT OF TRANSPORTATION

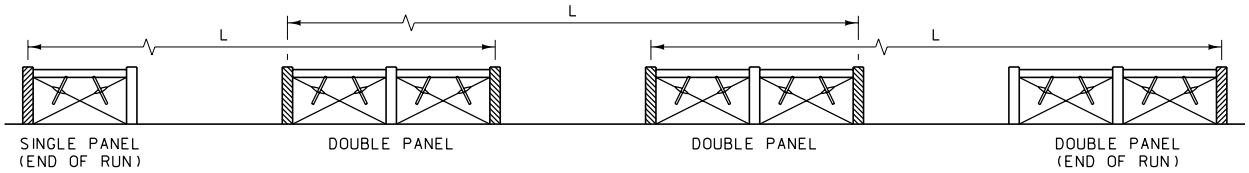

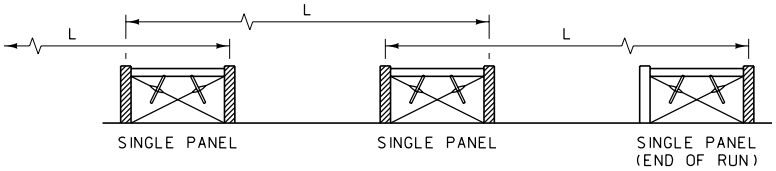

FENCE TYPE	RUN = L	PANELS REQUIRED
COMBINATION WOVEN/BARBED	LESS THAN 33'	NONE
	33' - 330'	SINGLE
	OVER 330' TO 660' MAX.	DOUBLE
BARBED	LESS THAN 66'	NONE
	66' -660'	SINGLE
	OVER 660' TO 990' MAX.	DOUBLE

FENCE TYPE	RUN = L (m)	PANELS REQUIRED
COMBINATION WOVEN/BARBED	LESS THAN 10	NONE
	10 - 100	SINGLE
	OVER 100 TO 200 MAX.	DOUBLE
BARBED	LESS THAN 20	NONE
	20 - 200	SINGLE
	OVER 200 TO 300 MAX.	DOUBLE

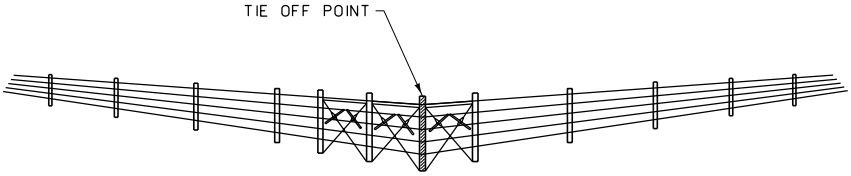

SELECT PANEL TYPE AT FENCE CORNER OR ANGLE BREAK BASED ON FENCE RUN LENGTH.

FENCE PANEL TYPES

1. LIMIT RUN LENGTHS IN POOR SOIL CONDITIONS TO REDUCE RESULTING TENSION AT CORNER OR ANGLE BREAK PANELS.
2. TIE OFF ON ALL CROSS HATCHED OR SHADED POSTS.

NOTES:

1. ATTACH BARBED WIRES TO POSTS BY WRAPPING AROUND THE POST AT LEAST TWO TIMES, THEN WRAPPING AROUND ITSELF FIVE TIMES.
2. TO ATTACH WOVEN WIRE TO AN END POST, REMOVE TWO OR THREE VERTICAL STAY WIRES FROM THE END OF THE FENCE. PLACE THE FIRST COMPLETE VERTICAL STAY WIRE AGAINST THE POST. START AT THE MIDDLE OF THE HORIZONTAL LINE WIRES, WRAPPING AROUND THE END POST AT LEAST TWO TIMES AND THEN WRAPPING AROUND ITSELF FIVE TIMES.
3. PLACE ALL FENCE WIRE ON PASTURE SIDE OF POST, EXCEPT ON CURVES. THEN, PLACE THE WIRE ON THE OUTSIDE OF THE CURVE.
4. IN AREAS SUBJECT TO HIGH VELOCITY WINDS AND MOVING DEBRIS, WIRES MAY BE PLACED ON WINDWARD SIDE OF POSTS, EXCEPT ON CURVES.
5. POST SPACING IS GENERALLY MEASURED PARALLEL TO GROUND.
6. PLACE WIRE STAYS PER DTL. DWG. NO. 607-00 HALFWAY BETWEEN POSTS. DO NOT PLACE STAYS ON PANELS.
7. WOOD FENCE HAS ONE METAL POST IN PLACE OF A WOODEN LINE POST IN EACH 500' [150 m] RUN FOR LIGHTNING PROTECTION.

UNITS SHOWN IN BRACKETS [] ARE METRIC AND ARE IN MILLIMETERS (mm) UNLESS OTHER UNITS ARE SHOWN.

DETAILED DRAWING	
REFERENCE STANDARD SPEC. SECTION 607	DWG. NO. 607-10
FENCE DETAILS	
EFFECTIVE: SEPTEMBER 2014	

MDT MONTANA DEPARTMENT OF TRANSPORTATION

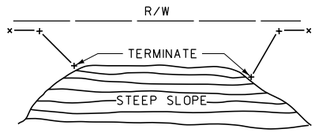

SLOPE MUST BE STEEP ENOUGH TO DETER PASSAGE OF TRESPASSERS.

FENCE LAYOUT ON STEEP SLOPES

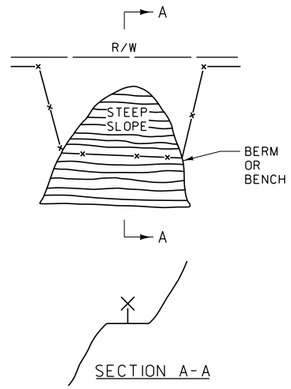

SECTION A-A

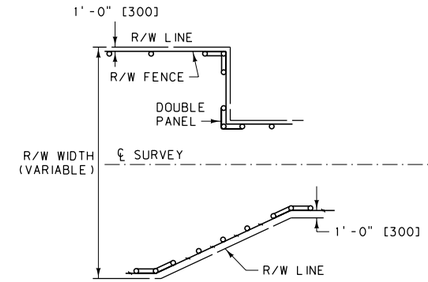

FENCE LAYOUT AT CHANGE IN R/W WIDTH ON INTERSTATE

* ONE FOOT OFFSET APPLIES TO INTERSTATE FENCING ONLY.

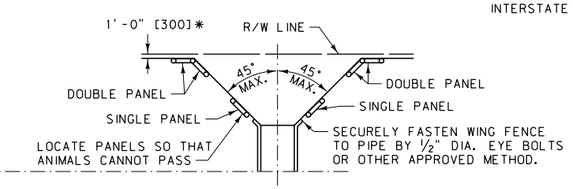

FENCE LAYOUT AT STOCKPASS, BRIDGES AND LARGE PIPES

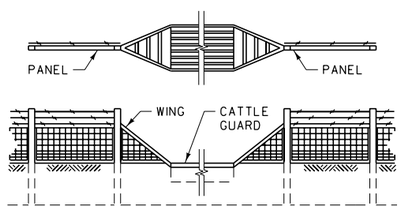

FENCE CONNECTION TO CATTLE GUARD

① PLACE SINGLE OR DOUBLE PANELS AT EACH END OF ALL CATTLE GUARDS.

② SECURELY FASTEN FENCE WIRE TO THE WINGS AND ARRANGE SO THAT ANIMALS CANNOT PASS.

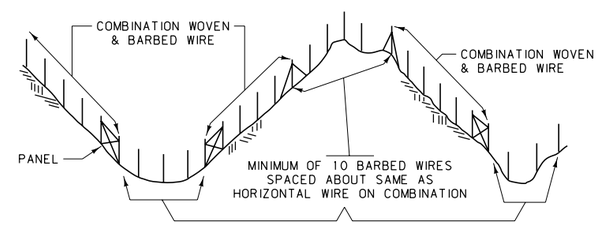

FENCE LAYOUT ON SHARP VERTICAL CURVES

TO AVOID TRYING TO CONFORM WOVEN WIRE TO UNEVEN TERRAIN

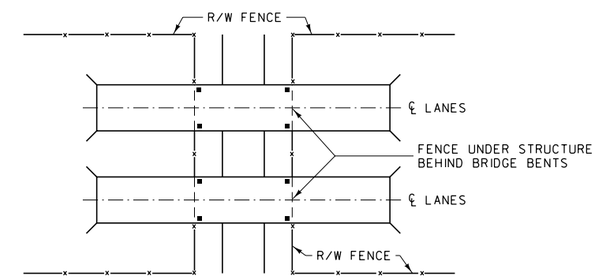

FENCE LAYOUT AT LOCAL ROAD UNDER INTERSTATE

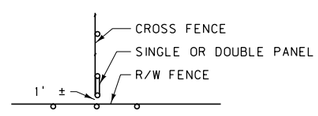

FENCE LAYOUT AT CROSS-FENCE CONNECTION

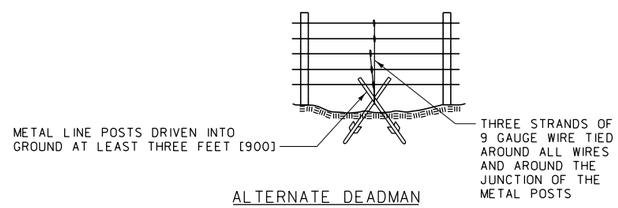

ALTERNATE DEADMAN

WHEN APPROVED BY THE PROJECT MANAGER THE ABOVE DEADMAN MAY BE USED.

A DEADMAN MAY BE A PRECAST CONCRETE BLOCK, A CAST IN PLACE CONCRETE BLOCK, A ROCK OR OTHER APPROVED OBJECT WEIGHING AT LEAST 150 LB. BURY THE DEADMAN IN THE GROUND WITH AT LEAST 2'-0" OF COVER. ATTACH THE DEADMAN TO THE FENCE WITH 3 STRANDS OF 9 GAUGE WIRE OR 6 STRANDS OF 12 1/2 GAUGE WIRE.

UNITS SHOWN IN BRACKETS [] ARE METRIC AND ARE IN MILLIMETERS (mm) UNLESS OTHER UNITS ARE SHOWN.

DETAILED DRAWING	
REFERENCE STANDARD SPEC. SECTION 607	DWG. NO. 607-15
FENCE DETAILS	
EFFECTIVE: SEPTEMBER 2014	

MDT MONTANA DEPARTMENT OF TRANSPORTATION

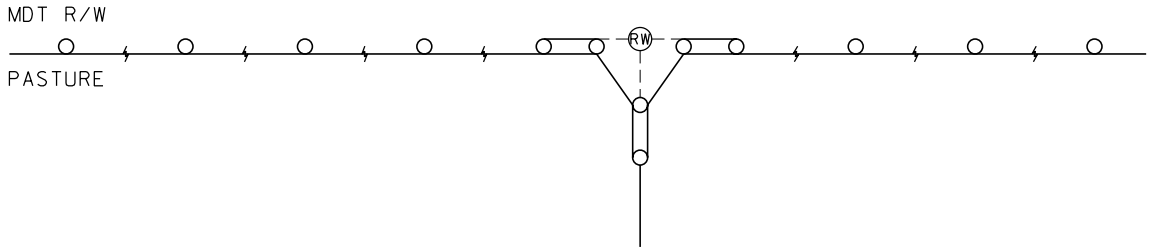

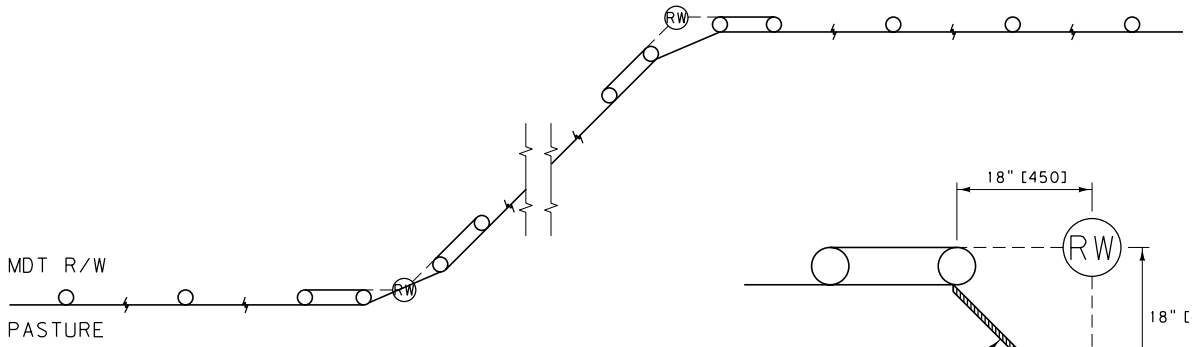

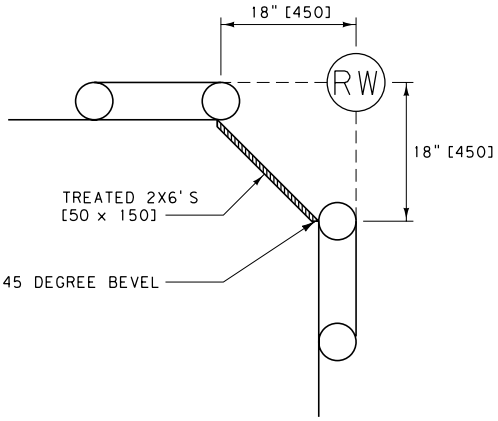

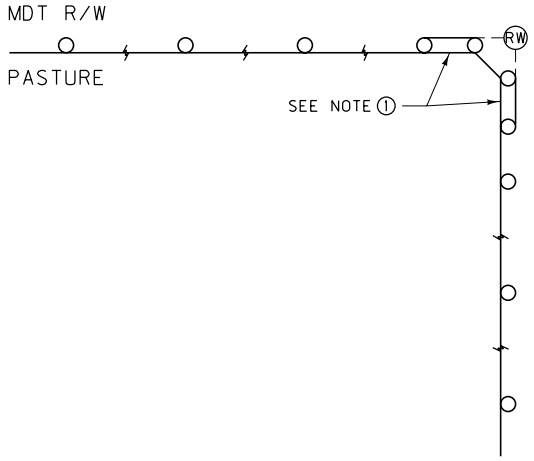

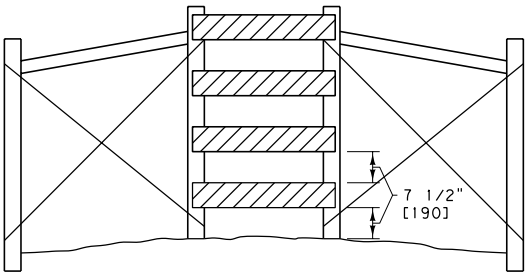

SPAN TREATED 2X6'S [50 x 150] ACROSS GAP ON PASTURE SIDE OF POSTS. NAIL TO PANEL POSTS WITH 2 20d GALVANIZED RING SHANK NAILS AND TRIM EDGES AT 45 DEGREE ANGLES.

NOTES:

1. INSTALL PANELS ACCORDING TO DETAIL DRAWING 607-05.
2. INSTALL NON-INTERSTATE FENCE ON THE RIGHT-OF-WAY LINE AS SHOWN.
3. OFFSET PANEL POSTS 18" [450mm] FROM STAKED R/W BREAKS AND R/W MONUMENTS AS SHOWN IN DETAIL.
4. DO NOT DISTURB SURVEY MONUMENTS.
5. INCLUDE COST OF 2 x 6 [50 x 150] CROSS RAILS IN THE COST OF ADJACENT PANELS.

UNITS SHOWN IN BRACKETS [] ARE METRIC AND ARE IN MILLIMETERS (mm) UNLESS OTHER UNITS ARE SHOWN.

DETAILED DRAWING	
REFERENCE STANDARD SPEC. SECTION 607	DWG. NO. 607-20
FENCING AT RIGHT OF WAY BREAKS	
EFFECTIVE: SEPTEMBER 2014	
MDT MONTANA DEPARTMENT OF TRANSPORTATION	

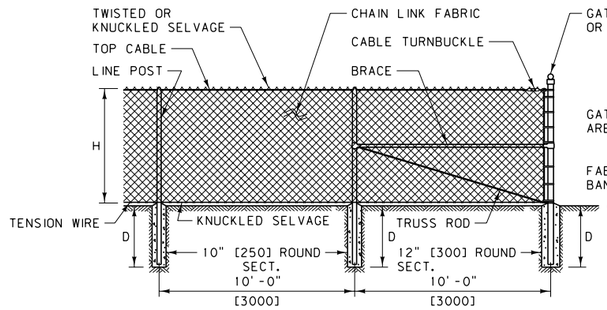

CHAIN LINK FENCE - 6' [1.8 m] AND 8' [2.4 m]

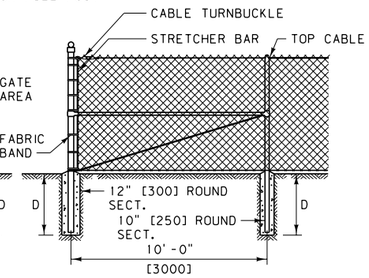

SINGLE PANEL

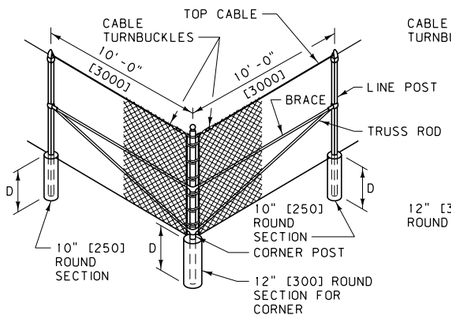

DOUBLE PANEL

PULL POST AND CORNER POST BRACING

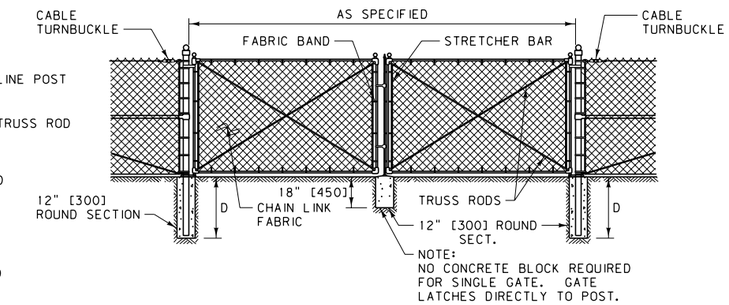

GATES

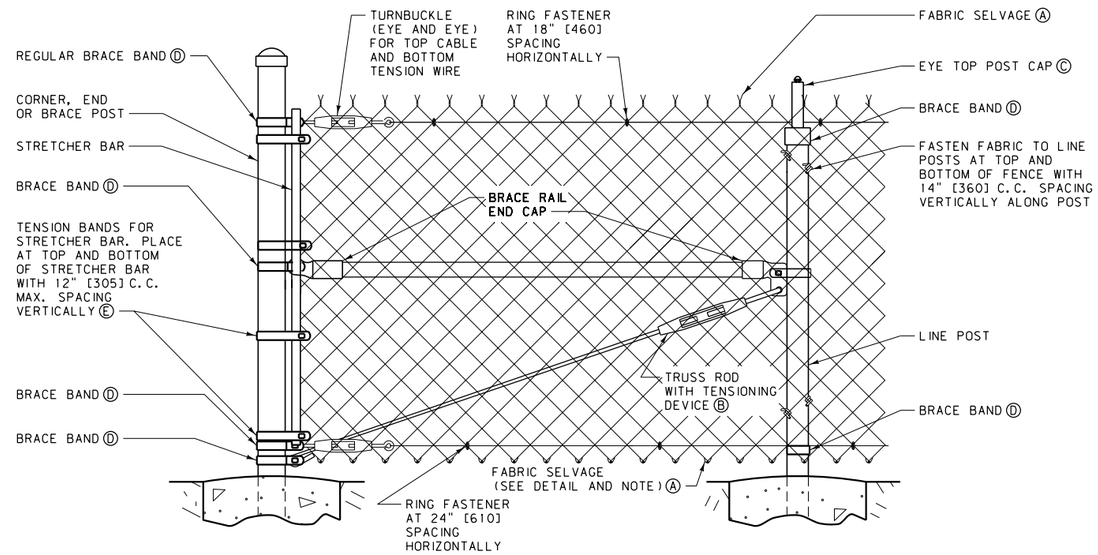

CONNECTION DETAILS

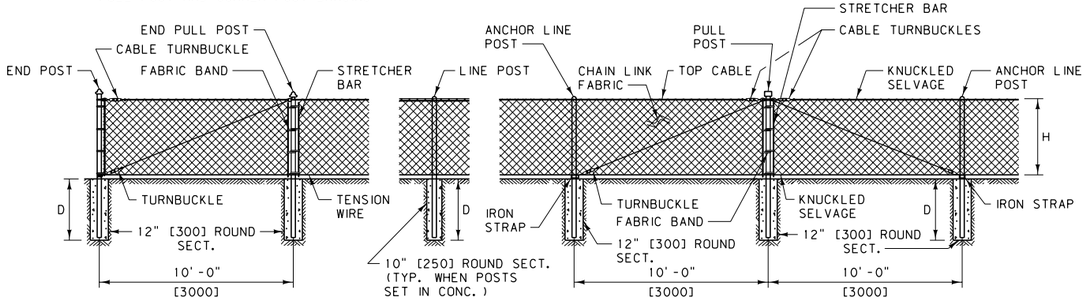

CHAIN LINK FENCE - 3' [0.9 m], 4' [1.2 m] AND 5' [1.5 m]

GENERAL NOTES

PROVIDE CHAIN LINK FENCE MATERIALS PER SECTION 712.

Ⓐ FABRIC SELVAGE: FENCE HEIGHT UNDER 6' [1.8 m]: TOP AND BOTTOM KNUCKLED SELVAGE.

FENCE HEIGHT 6' [1.8 m] AND OVER: TOP - TWISTED OR KNUCKLED SELVAGE BOTTOM - KNUCKLED SELVAGE

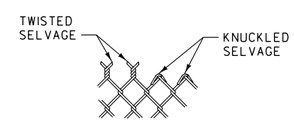

SELVAGE DETAIL

Ⓑ TRUSS RODS: SEE SECTION 712.01.4

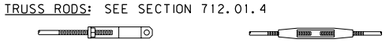

INDUSTRIAL TRUSS TIGHTENER TURNBUCKLE

Ⓒ POST CAPS: PROVIDE EYE-TOP CAPS FOR ALL POSTS CARRYING A TOP CABLE THROUGH THE POST. PROVIDE ROUNDED TOPS FOR ALL OTHER ROUND POSTS. FIT POST CAPS TIGHTLY TO PREVENT REMOVAL.

Ⓓ BRACE BANDS: SEE SECTION 712.01.5.

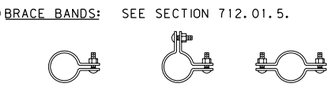

BRACE BAND DETAIL

Ⓔ TENSION BANDS: SEE SECTION 712.01.5

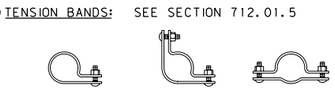

TENSION BAND DETAIL

NOTES:

① DO NOT INSTALL DOUBLE PANELS MORE THAN 300' [90 m] APART ON TANGENTS OR MORE THAN 250' [75 m] APART ON ANY CURVE. FOR CURVES WITH RADII SHARPER THAN 1150' [350 m], INSTALL A DOUBLE PANEL ON EACH CURVE END, PLUS ONE ADDITIONAL PANEL FOR EACH 10° OF DEFLECTION, EVENLY SPACED, BETWEEN THE CURVE ENDS.

② PULL POST BRACING ON 6' [1.8 m] AND 8' [2.4 m] FENCE IS THE SAME AS CORNER BRACING.

③ A DROP BAR LOCKING DEVICE IS REQUIRED FOR ALL DOUBLE GATE INSTALLATIONS. THE DROP BAR MUST BE ABLE TO BE INSERTED INTO THE CONCRETE BLOCK AT LEAST SIX INCHES [150].

④ ALL CONCRETE IS LEAN OR BETTER.

⑤ INSTALL A 3/8" [10] DIAMETER GALVANIZED STEEL TOP CABLE ALONG ALL FENCE. TERMINATE TOP CABLE WITH GALVANIZED CABLE TURNBUCKLES FASTENED VIA THE FABRIC BAND AT THE POST.

HEIGHT OF FABRIC, H	WIRE FABRIC ABOVE GROUND	DEPTH OF CONCRETE, D	DEPTH OF POST IN CONC. (MIN.)
8' [2440]	1"-2" [25-50]	42" [1050]	38" [950]
6' [1830]	1"-2" [25-50]	36" [900]	32" [800]
5' [1525]	1"-2" [25-50]	36" [900]	32" [800]
4' [1220]	1"-2" [25-50]	30" [750]	26" [650]
3' [915]	1"-2" [25-50]	30" [750]	26" [650]

UNITS SHOWN IN BRACKETS [] ARE METRIC AND ARE IN MILLIMETERS (mm) UNLESS OTHER UNITS ARE SHOWN.

DETAILED DRAWING	
REFERENCE STANDARD SPEC. SECTION 607	DWG. NO. 607-25
CHAIN LINK FENCE	
EFFECTIVE: SEPTEMBER 2014	

MDT MONTANA DEPARTMENT OF TRANSPORTATION

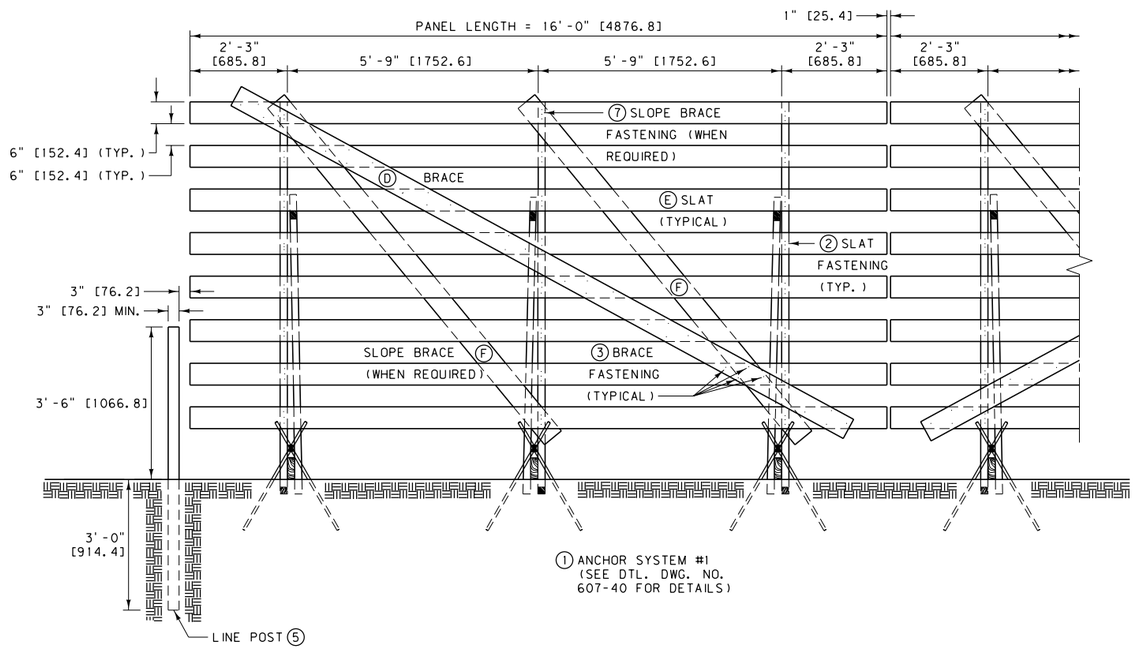

FRONT VIEW

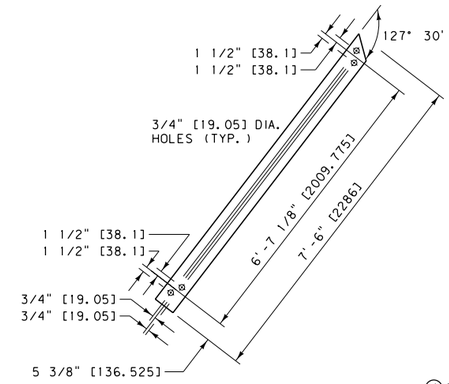

B FRAME

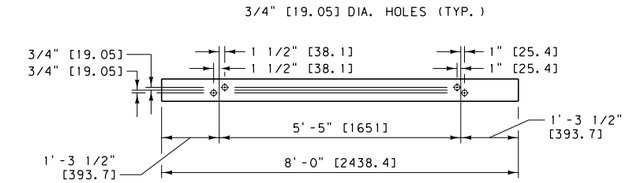

A SILL

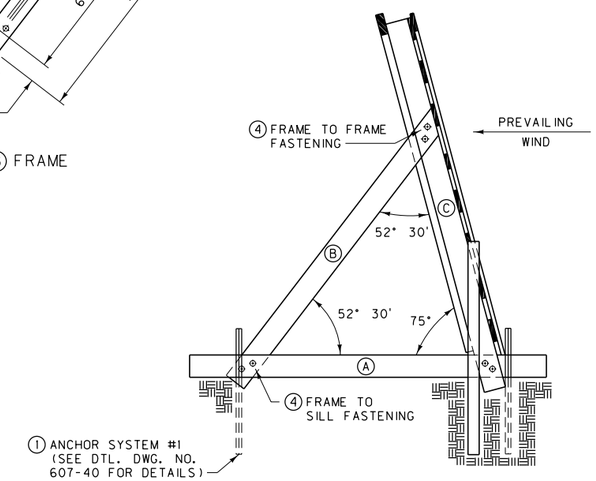

END VIEW

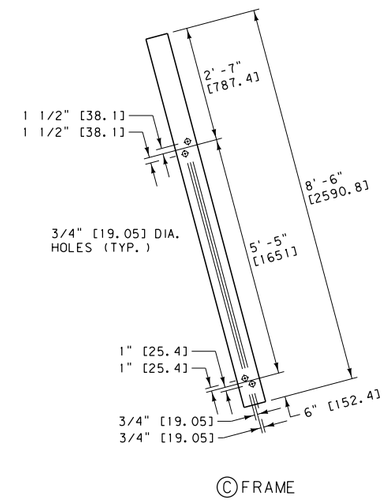

C FRAME

GENERAL NOTES

1. ANCHOR SYSTEM DETAIL
   USE ANCHOR SYSTEM #1 UNLESS SOIL AND MOISTURE CONDITIONS NECESSITATE THE USE OF AN ALTERNATE SYSTEM, OR AS DIRECTED BY THE PROJECT MANAGER. CONSULT DETAILED DRAWING NUMBERS 607-40 AND 607-45 FOR ANCHOR SYSTEMS #3 (ROCKY CONDITIONS) AND #2 (SWAMPY CONDITIONS).
2. SLAT FASTENING
   FASTEN SLATS TO THE FRAME WITH 3 ~ 12d COMMON BARBED SHANK NAILS AT EACH LOCATION.
3. BRACE FASTENING
   FASTEN BRACES TO THE FRAME WITH 4 ~ 8d COMMON NAILS AT EACH LOCATION AND CLINCH.
4. FRAME TO SILL AND FRAME TO FRAME FASTENING
   FASTEN THE SILL AND FRAME MEMBERS TO THE FRAME AT EACH LOCATION WITH 2 ~ 5/8 " DIA. x 5" [M16 x 127]STANDARD MACHINE BOLTS, EACH WITH HEX NUT AND TWO FLAT WASHERS. SEE NOTE X AT RIGHT.
5. LINE POSTS
   PLACE LINE POSTS AT EACH END OF EACH LINE OF SNOW FENCE AS SHOWN. POSTS ARE 6'-6" [1981.2] LONG WITH A MINIMUM DIAMETER OF 3" [76.2] AND A MAXIMUM DIAMETER OF 6" [152.4]. BUTT TREAT 3' [914.4] MINIMUM.
6. WIRE TIE
   USE 12 GAUGE OR HEAVIER GALVANIZED WIRE TO FORM THE WIRE TIES.
7. SLOPE BRACE FASTENING
   FASTEN SLOPE BRACES WITH 3 ~ 16d COMMON BARBED SHANK NAILS AT EACH LOCATION.

LUMBER - 8' [2.4 m] SNOW FENCE W/ ANCHOR SYSTEM #1

BILL OF MATERIALS FOR ONE PANEL

ITEM NO.	NO. OF PIECES	LUMBER SIZE	DESCRIPTION
A*	3	2" x 6" x 8'-0" [50 x 150 x 2438.4]	FRAME (SILL)
B*	3	2" x 6" x 7'-6" [50 x 150 x 2286.0]	FRAME
C*	3	2" x 6" x 8'-6" [50 x 150 x 2590.8]	FRAME
* NOTE: PRESSURE TREAT ALL 2" x 6" [50 x 150] MEMBERS (ENTIRE FRAME)			
D	1	1" x 6" x 16'-0" [25 x 150 x 4876.8]	BRACE
E	8	1" x 6" x 16'-0" [25 x 150 x 4876.8]	SLAT
F**	2	2" x 6" x 10'-0" [50 x 150 x 3048.0]	SLOPE BRACE
** NOTE: USE ONLY WHEN SLOPE IS 5:1 OR STEEPER			

HARDWARE - 8' [2.4 m] SNOW FENCE W/ ANCHOR SYSTEM #1

BILL OF MATERIALS FOR ONE PANEL

	QUANTITY	DESCRIPTION
4	18	5/8" DIA. x 5" [M16 x 127] HEX BOLT (THREADED FULL LENGTH) AND NUT
4	36	FLAT WASHER FOR 5/8" DIA. [M16] BOLT
2	1 LB. [0.45 kg]	12d COMMON BARBED SHANK NAIL
1	12	#6 REBAR x 5'-0" [#19 x 1524]
6	6 PIECES	12 GAUGE TIE WIRE x 5'-0" [1524.0]±
3	1/3 LB. [0.15 kg]	8d COMMON NAILS
7	1/4 LB. [0.11 kg]	16d COMMON BARBED SHANK NAILS

ALL NAILS MAY BE EITHER HAND DRIVEN OR DRIVEN WITH A PNEUMATIC NAILER.

X NOTE:
AFTER 5/8" DIA. [M16] BOLTS HAVE BEEN TIGHTENED, BURR THE THREAD DIRECTLY BEHIND THE NUT TO PREVENT EVENTUAL LOOSENING OF THE NUTS.

UNITS SHOWN IN BRACKETS [] ARE METRIC AND ARE IN MILLIMETERS (mm) UNLESS OTHER UNITS ARE SHOWN.

DETAILED DRAWING

REFERENCE STANDARD SPEC. SECTION 607 — DWG. NO. 607-30

8' [2.4 m] WOOD SNOW FENCE W/ ANCHOR SYSTEM #1

EFFECTIVE: SEPTEMBER 2014

MDT MONTANA DEPARTMENT OF TRANSPORTATION

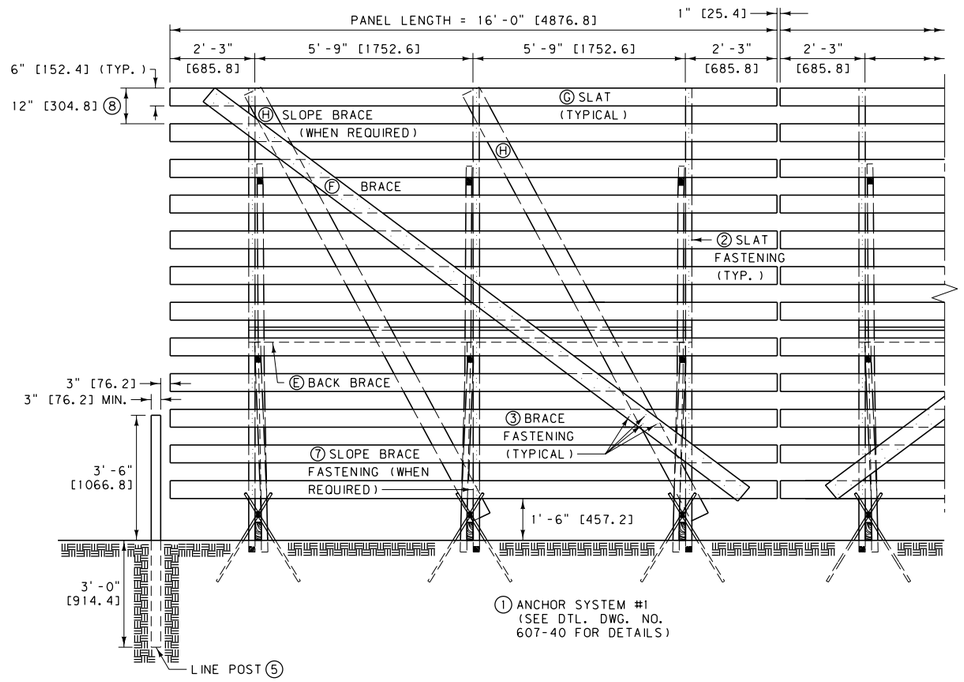

FRONT VIEW

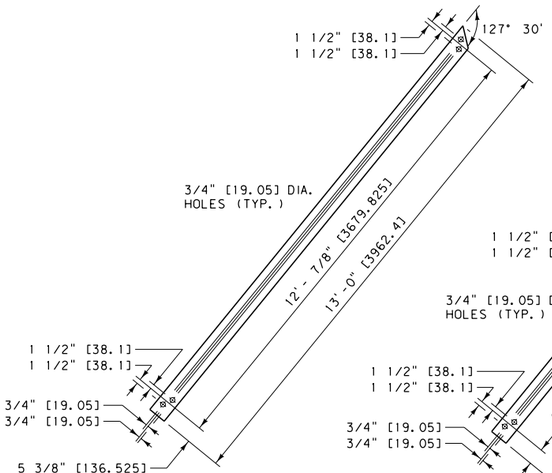

(C) FRAME

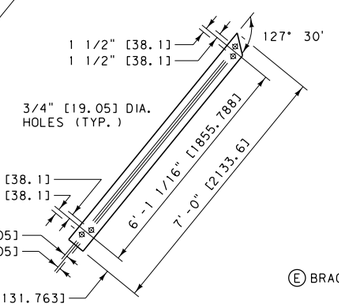

(B) FRAME

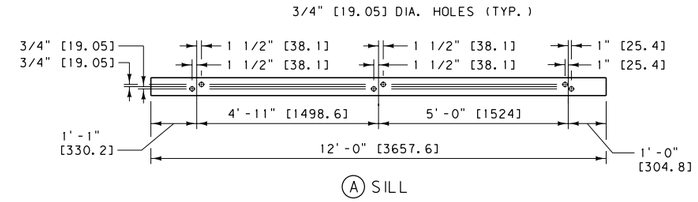

(A) SILL

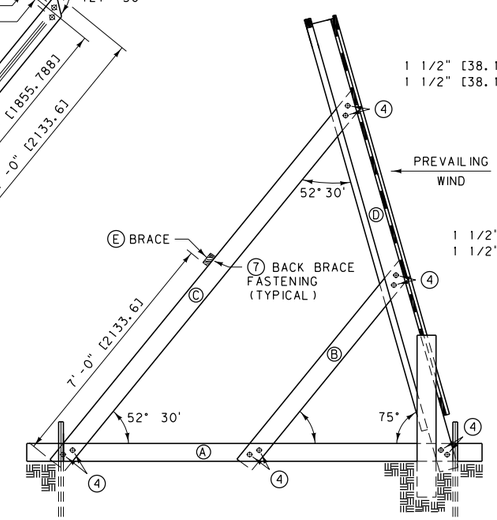

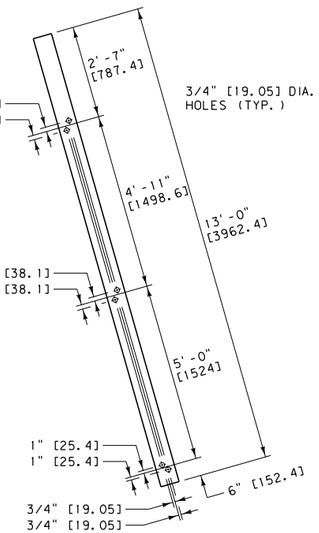

(D) FRAME

NOTE:
PLACEMENT OF REBAR ANCHORS TIGHT AGAINST SNOW FENCE MEMBERS (A) (C) & (D) IS CRITICAL TO PREVENT OVERTURNING AND SLIDING. SEE ANCHOR SYSTEM #1 DETAILS, DTL. DWG. NO. 607-40.

DIG OUT AS REQUIRED FOR ENDS OF MEMBERS (B) (C) & (D) AND THE ENTIRE LENGTH OF SILL (A) TO ASSURE FULL BEARING OF SILL AGAINST TERRAIN.

END VIEW

GENERAL NOTES

(1) ANCHOR SYSTEM DETAIL
USE ANCHOR SYSTEM #1 UNLESS SOIL AND MOISTURE CONDITIONS NECESSITATE THE USE OF AN ALTERNATE SYSTEM, OR AS DIRECTED BY THE PROJECT MANAGER. CONSULT DETAILED DRAWING NUMBERS 607-40 AND 607-45 FOR ANCHOR SYSTEMS #3 (ROCKY CONDITIONS) AND #2 (SWAMPY CONDITIONS).

(2) SLAT FASTENING
FASTEN SLATS TO THE FRAME WITH 3 ~ 12d COMMON BARBED SHANK NAILS AT EACH LOCATION.

(3) BRACE FASTENING
FASTEN BRACES TO THE FRAME WITH 4 ~ 8d COMMON NAILS AT EACH LOCATION AND CLINCH.

(4) FRAME TO SILL AND FRAME TO FRAME FASTENING
FASTEN THE SILL AND FRAME MEMBERS TO THE FRAME AT EACH LOCATION WITH 2 ~ 5/8" DIA. x 5" [M16 x 127] STANDARD MACHINE BOLTS, EACH WITH HEX NUT AND TWO FLAT WASHERS. SEE NOTE (X) AT RIGHT.

(5) LINE POSTS
PLACE LINE POSTS AT EACH END OF EACH LINE OF SNOW FENCE AS SHOWN. POSTS ARE 6'-6" [1981.2] LONG WITH A MINIMUM DIAMETER OF 3" [76.2] AND A MAXIMUM DIAMETER OF 6" [152.4]. BUTT TREAT 3' [914.4] MINIMUM.

(6) WIRE TIE
USE 12 GAUGE OR HEAVIER GALVANIZED WIRE TO FORM THE WIRE TIES.

(7) BACK & SLOPE BRACE FASTENING
FASTEN BACK BRACES TO THE FRAME WITH 2 ~ 16d NAILS, AND FASTEN THE SLOPE BRACES WITH 3 ~ 16d BARBED SHANK NAILS AT EACH LOCATION.

(8) 12" [304.8] INCREMENT SPACING FROM TOPS OF EACH SLAT (IE. 12" [304.8], 24" [609.6], 36" [914.4]).

LUMBER - 12' [3.6 m] SNOW FENCE W/ ANCHOR SYSTEM #1			
BILL OF MATERIALS FOR ONE PANEL			
ITEM NO.	NO. OF PIECES	LUMBER SIZE	DESCRIPTION
(A)*	3	2" x 6" x 12'-0" [50 x 150 x 3657.6]	SILL
(B)*	3	2" x 6" x 7'-0" [50 x 150 x 2133.6]	FRAME
(C)*	3	2" x 6" x 13'-0" [50 x 150 x 3962.4]	FRAME
(D)*	3	2" x 6" x 13'-0" [50 x 150 x 3962.4]	FRAME
* NOTE: PRESSURE TREAT ALL 2" x 6" [50 x 150] MEMBERS (ENTIRE FRAME)			
(E)	1	2" x 4" x 12'-0" [50 x 100 x 3657.6]	BACK BRACE
(F)	1	1" x 6" x 18'-0" [25 x 150 x 5486.4]	BRACE
(G)	12	1" x 6" x 16'-0" [25 x 150 x 4876.8]	SLAT
(H)**	2	2" x 6" x 13'-0" [50 x 150 x 3962.4]	SLOPE BRACE
** NOTE: USE ONLY WHEN SLOPE IS 5:1 OR STEEPER			

HARDWARE - 12' [3.6 m] SNOW FENCE W/ ANCHOR SYSTEM #1		
BILL OF MATERIALS FOR ONE PANEL		
	QUANTITY	DESCRIPTION
(4)	30	5/8" DIA. x 5" [M16 x 127] HEX BOLT (THREADED FULL LENGTH) AND NUT
(4)	60	FLAT WASHER FOR 5/8" DIA. [M16] BOLT
(3)	1/2 LB. [0.23 kg]	8d COMMON NAILS
(2)	1 2/3 LB. [0.76 kg]	12d COMMON BARBED SHANK NAILS
(7)	1/2 LB. [0.23 kg]	16d COMMON BARBED SHANK NAILS
(1)	12	#6 REBAR x 5'-0" [#19 x 1524]
(6)	6 PIECES	12 GAUGE TIE WIRE x 5'-0" [1524.0]±

ALL NAILS MAY BE EITHER HAND DRIVEN OR DRIVEN WITH A PNEUMATIC NAILER.

(X) NOTE:
AFTER 5/8" [M16] DIA. BOLTS HAVE BEEN TIGHTENED, BURR THE THREAD DIRECTLY BEHIND THE NUT TO PREVENT EVENTUAL LOOSENING OF THE NUTS.

UNITS SHOWN IN BRACKETS [] ARE METRIC AND ARE IN MILLIMETERS (mm) UNLESS OTHER UNITS ARE SHOWN.

DETAILED DRAWING

REFERENCE STANDARD SPEC. SECTION 607

DWG. NO. 607-35

12' [3.6 m] WOOD SNOW FENCE W/ ANCHOR SYSTEM #1

EFFECTIVE: SEPTEMBER 2014

MDT MONTANA DEPARTMENT OF TRANSPORTATION

ANCHOR SYSTEM #3
(FOR ROCKY CONDITIONS)

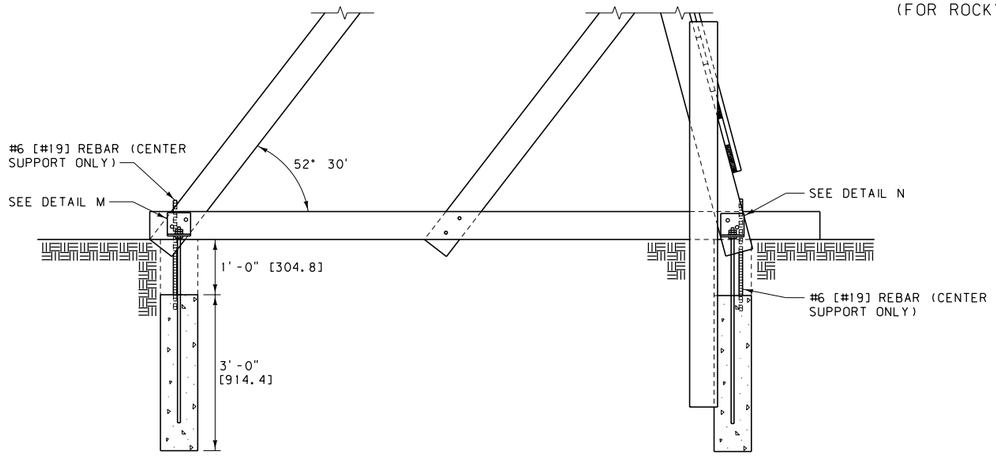

LEFT END VIEW

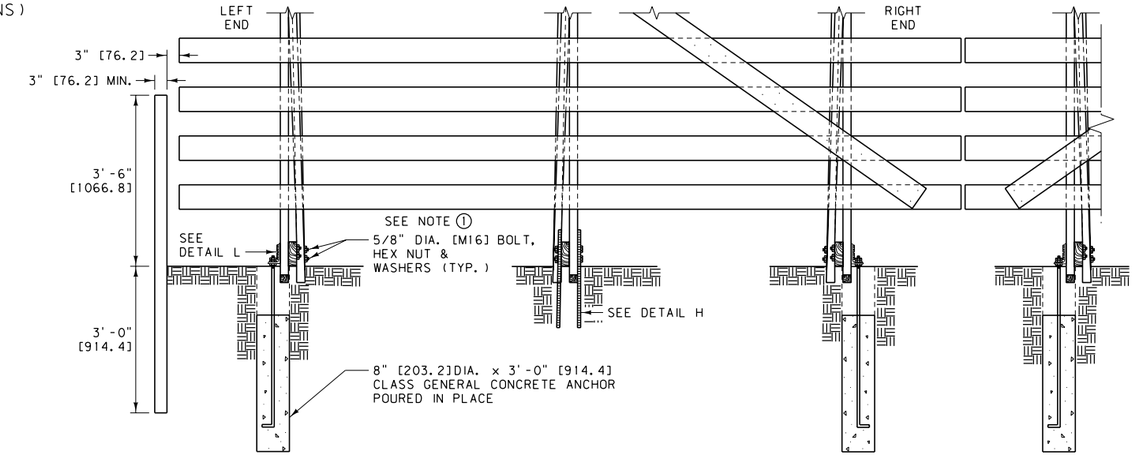

FRONT VIEW

NOTE:
HOLES SHOWN IN DETAILS BELOW ARE FOR LEFT END OF FENCE.
HOLES SHOWN HIDDEN ARE FOR RIGHT END OF FENCE.

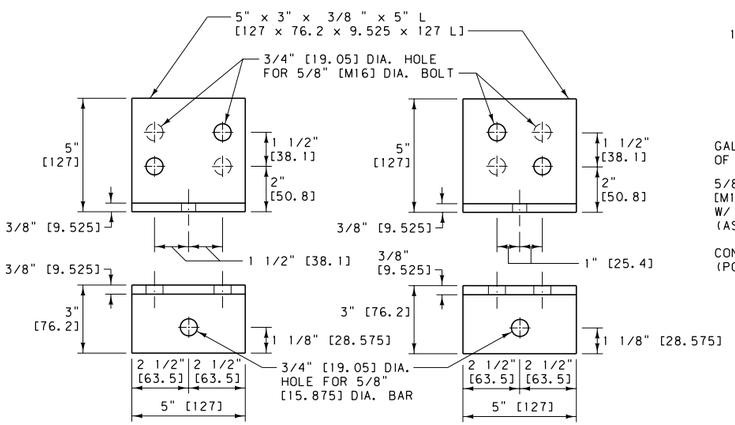

DETAIL M DETAIL N

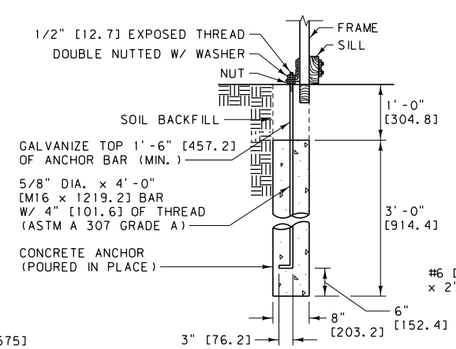

DETAIL L

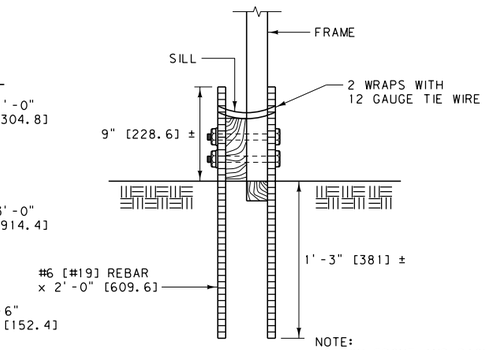

DETAIL H

LUMBER - SNOW FENCE W/ ANCHOR SYSTEM #3
BILL OF MATERIALS FOR ONE PANEL
SAME AS FOR SNOW FENCE W/ ANCHOR SYSTEM #1

HARDWARE - SNOW FENCE W/ ANCHOR SYSTEM #3		
BILL OF MATERIALS FOR ONE PANEL		
QUANTITY	DESCRIPTION	
4	5" x 3" x 3/8" x 5" L [127 x 76.2 x 9.525 x 127.0 L]	
4	5/8" DIA. x 4'-0" [M16 X 1219.2] BAR W/ 3 HEX NUTS	
4	FLAT WASHERS FOR 5/8" [16] DIA. BAR	
0.16 C.Y. [0.122 m³]	CLASS GENERAL CONCRETE	
4	#6 [#19] REBAR x 2'-0" [609.6] (3/4" [19.05] DIA.)	
4 PIECES	12 GAUGE TIE WIRE x 2'-0" [609.6] ±	
30	5/8" DIA. x 5" [M16 x 127] HEX BOLT (THREADED FULL LENGTH) AND NUT	← SEE NOTE ① BELOW
60	FLAT WASHERS FOR 5/8" [M16] DIA. BOLT	
NOTE: NAILS REQUIRED ARE SAME AS SHOWN ON HARDWARE SUMMARY FOR SNOW FENCE W/ ANCHOR SYSTEM #1		

NOTE:
① AFTER 5/8" [M16] DIA. BOLTS HAVE BEEN TIGHTENED, BURR THE THREAD DIRECTLY BEHIND THE NUT TO PREVENT EVENTUAL LOOSENING OF THE NUTS.

ANCHOR SYSTEM #1
(STANDARD)

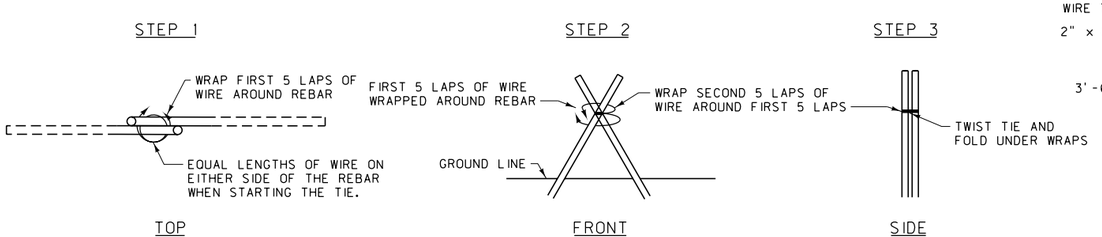

WIRE TIE DETAIL
USE 12 GAUGE OR HEAVIER GALVANIZED WIRE TO FORM THE WIRE TIES.

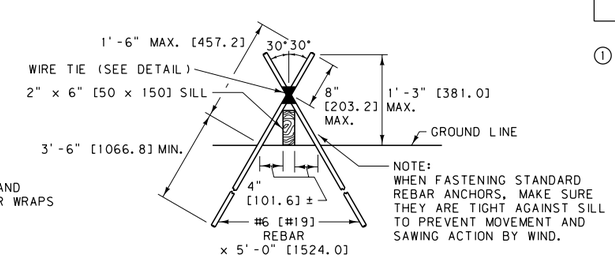

USE TWO #6 [#19]REINFORCING BARS FOR EACH END OF EACH SILL MEMBER. DRIVE THE BARS UP TIGHT TO THE FRAME TO PREVENT SLIDING. TIE THE REINFORCING BARS AS SHOWN IN THE WIRE TIE DETAIL. THE PLACEMENT OF THE ANCHORS IS CRITICAL IN PREVENTING OVERTURNING AND SLIDING OF THE FENCE. REFERENCE DETAIL DRAWING 607-35 FOR MORE DETAILS.

STANDARD ANCHOR DETAIL

UNITS SHOWN IN BRACKETS [] ARE METRIC AND ARE IN MILLIMETERS (mm) UNLESS OTHER UNITS ARE SHOWN.

DETAILED DRAWING	
REFERENCE STANDARD SPEC. SECTION 607	DWG. NO. 607-40
WOOD SNOW FENCE ANCHOR SYSTEM #3 AND #1 DETAILS	
EFFECTIVE: SEPTEMBER 2014	
MDT MONTANA DEPARTMENT OF TRANSPORTATION	

ANCHOR SYSTEM #2
(FOR SWAMPY CONDITIONS)

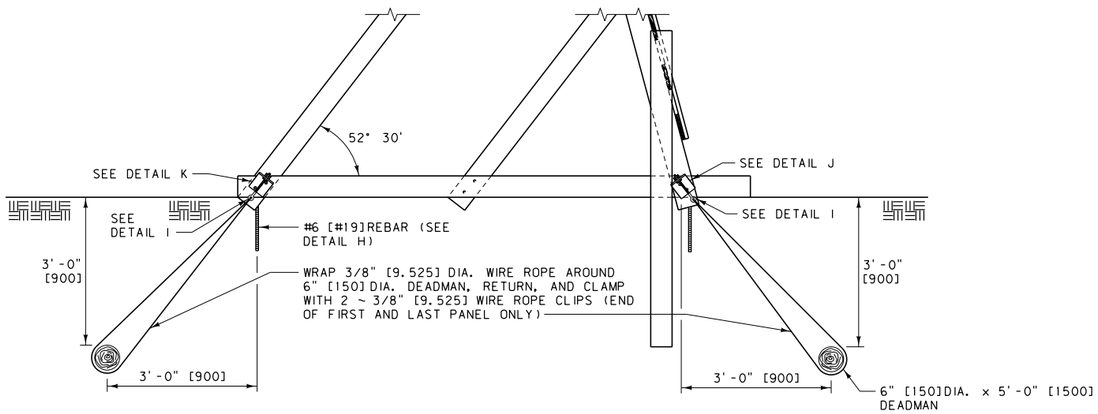

LEFT END VIEW

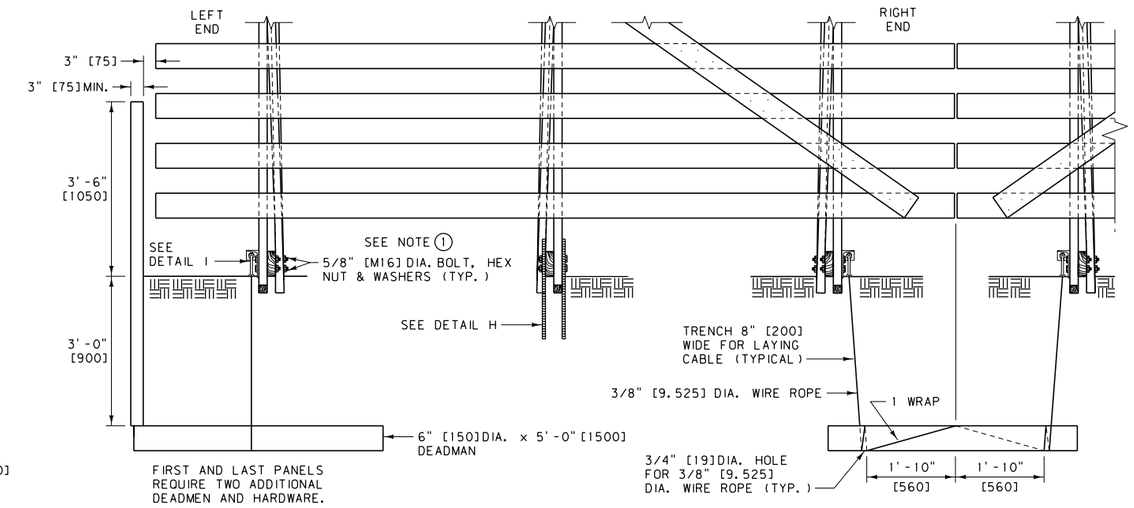

FRONT VIEW

NOTE:
HOLES SHOWN IN DETAILS BELOW ARE FOR LEFT END OF FENCE.
HOLES SHOWN HIDDEN ARE FOR RIGHT END OF FENCE.

LUMBER - SNOW FENCE W/ ANCHOR SYSTEM #2
BILL OF MATERIALS FOR ONE PANEL
SAME AS FOR SNOW FENCE W/ ANCHOR SYSTEM #1

HARDWARE - SNOW FENCE W/ ANCHOR SYSTEM #2	
BILL OF MATERIALS FOR ONE 12' [3.6m] PANEL	
QUANTITY	DESCRIPTION
4	5" x 3" x 3/8" x 5" L [127 x 76.2 x 9.525 x 127 L]
8	3/8" [9.525] WIRE CLIPS
4	1/2" [12.7] DIA. DROP FORGED EYEBOLTS W/ 3 HEX NUTS
4	FLAT WASHERS FOR 1/2" [12.7] DIA. EYEBOLTS
4	#6 [#19] REBAR x 2'-0" [609.6] (3/4" [19.05] DIA.)
4 PIECES	12 GAUGE TIE WIRE x 2'-0" [609.6]±
30 FT. [8839.2]	3/8" [9.525] DIA. WIRE ROPE
2	6" [150] DIA. x 5'-0" [1500] POST DEADMEN
30	5/8" DIA. x 5" [M16 x 127] HEX BOLT (THREADED FULL LENGTH) AND NUT
60	FLAT WASHERS FOR 5/8" [M16] BOLT
NOTE: NAILS REQUIRED ARE SAME AS SHOWN ON HARDWARE SUMMARY FOR SNOW FENCE W/ ANCHOR SYSTEM #1	

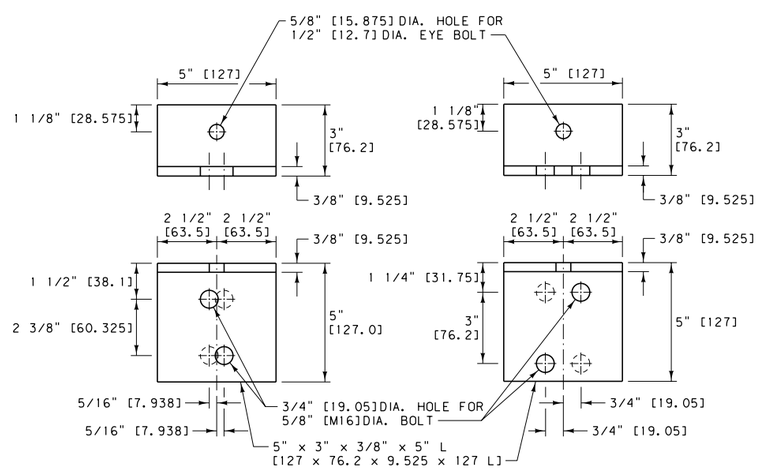

DETAIL J

DETAIL K

1 NOTE:
AFTER 5/8" [M16] DIA. BOLTS HAVE BEEN TIGHTENED, BURR THE THREAD DIRECTLY BEHIND THE NUT TO PREVENT EVENTUAL LOOSENING OF THE NUTS.

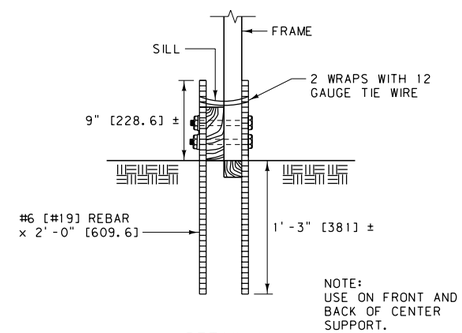

DETAIL H

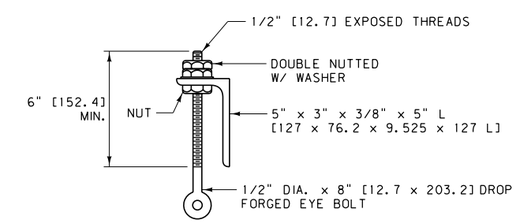

DETAIL I

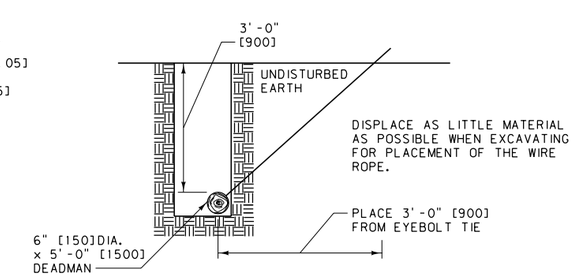

DEADMAN DETAIL

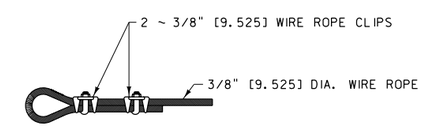

WIRE ROPE CONNECTION

UNITS SHOWN IN BRACKETS [] ARE METRIC AND ARE IN MILLIMETERS (mm) UNLESS OTHER UNITS ARE SHOWN.

DETAILED DRAWING	
REFERENCE STANDARD SPEC. SECTION 607	DWG. NO. 607-45
WOOD SNOW FENCE ANCHOR SYSTEM #2 DETAILS	
EFFECTIVE: SEPTEMBER 2014	

MDT MONTANA DEPARTMENT OF TRANSPORTATION

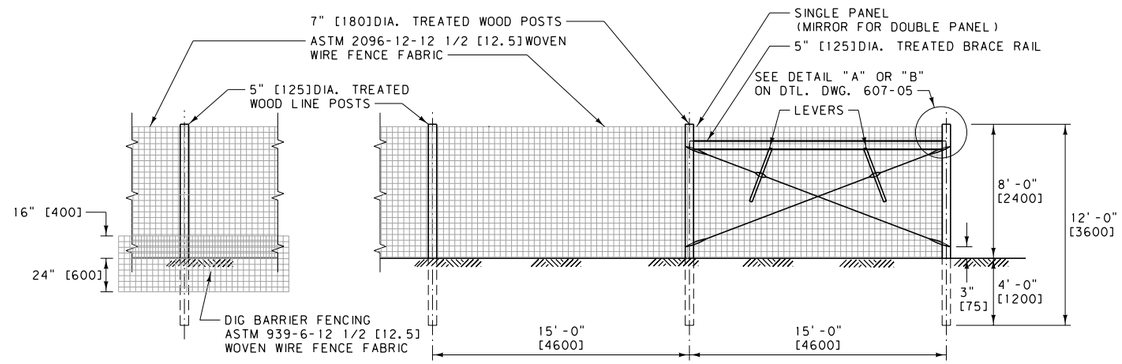

WILDLIFE FENCE W/ DIG BARRIER

PANELS NOT SHOWN

WILDLIFE FENCE

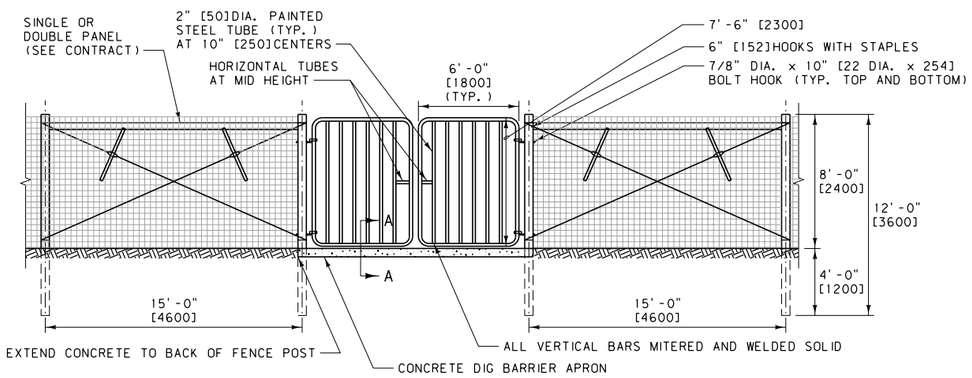

METAL MAINTENANCE ACCESS GATE

CHAIN AND LOCK TO BE SUPPLIED BY MDT FORCES

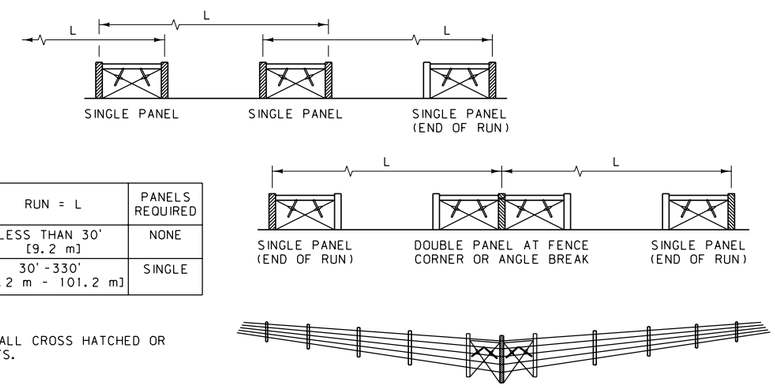

FENCE TYPE	RUN = L	PANELS REQUIRED
WILDLIFE	LESS THAN 30' [9.2 m]	NONE
	30'-330' [9.2 m - 101.2 m]	SINGLE

NOTE:

TIE OFF ON ALL CROSS HATCHED OR SHADED POSTS.

FENCE PANEL TYPES

NOTES:

1. PLACE ALL FENCE WIRE ON PASTURE SIDE OF POST, EXCEPT ON CURVES. THEN, PLACE THE WIRE ON THE OUTSIDE OF THE CURVE.
2. POST SPACING IS GENERALLY MEASURED PARALLEL TO GROUND.
3. LINE POST SPACING IS 15'-0" [4600]CENTER TO CENTER. LINE POST SPACING FROM BRACE OR PANEL POST IS 15'-0" [4600]CENTER TO CENTER.
4. TO ATTACH WOVEN WIRE TO AN END POST, REMOVE TWO OR THREE VERTICAL STAY WIRES FROM THE END OF THE FENCE. PLACE THE FIRST COMPLETE VERTICAL STAY WIRE AGAINST THE POST. START AT THE MIDDLE OF THE HORIZONTAL LINE WIRES, WRAPPING AROUND THE END POST AT LEAST TWO TIMES AND THEN WRAPPING AROUND ITSELF FIVE TIMES.
5. A DEADMAN MAY BE A PRECAST CONCRETE BLOCK, A CAST IN PLACE CONCRETE BLOCK, A ROCK OR OTHER APPROVED OBJECT WEIGHING AT LEAST 260 LB. [120 kg] BURY THE DEADMAN IN THE GROUND WITH AT LEAST 2'-0" [600] OF COVER. ATTACH THE DEADMAN TO THE FENCE WITH 3 STRANDS OF 9 GAUGE WIRE OR 6 STRANDS OF 12 1/2 [12.5] GAUGE WIRE. SEE DTL. DWG. NO. 607-10 FOR ALTERNATE DEADMAN.
6. STAPLE THE BOTTOM, TOP, CENTER AND ALTERNATE WIRES OF WOVEN WIRE TO WOOD LINE POSTS.
7. STAPLE ALL WIRES OF WOVEN WIRE TO WOOD CORNER POSTS OR POST USED TO TIE-OFF WIRE.
8. PROVIDE LATCH THAT ALLOWS FOR ONE HANDED OPERATION. RELEASES TO ALLOW GATE TO SWING IN EITHER DIRECTION AND CAN BE LOCKED.

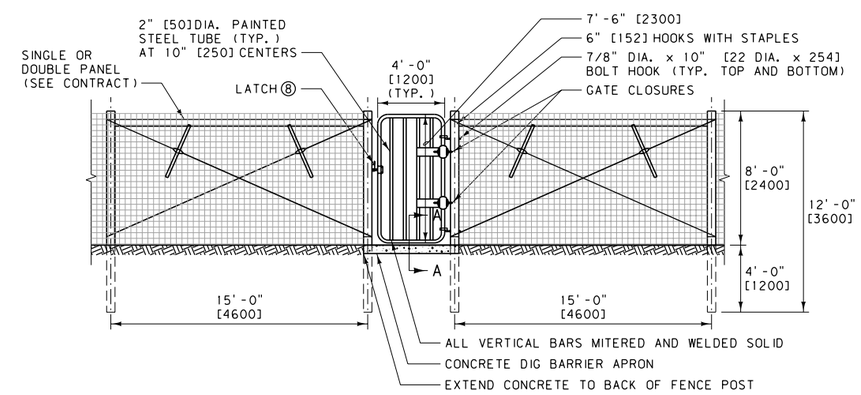

METAL EQUINE GATE

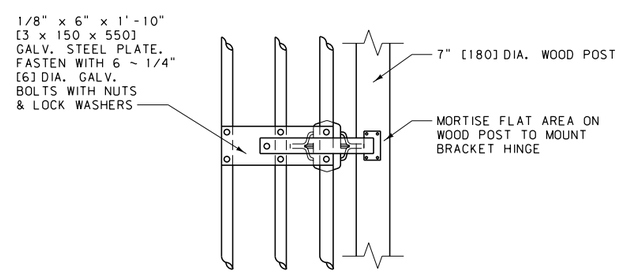

TIE BAR MOUNTING DETAIL FOR GATE CLOSERS

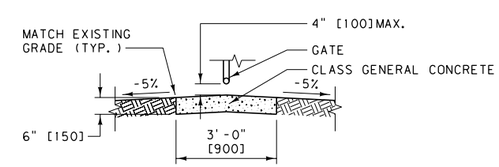

SECTION A-A

CENTER CONCRETE DIG BARRIER APRON UNDER CLOSED GATE

UNITS SHOWN IN BRACKETS [] ARE METRIC AND ARE IN MILLIMETERS (mm) UNLESS OTHER UNITS ARE SHOWN.

DETAILED DRAWING	
REFERENCE STANDARD SPEC. SECTION 607	DWG. NO. 607-50
WILDLIFE FENCE	
EFFECTIVE: SEPTEMBER 2014	

MDT MONTANA DEPARTMENT OF TRANSPORTATION

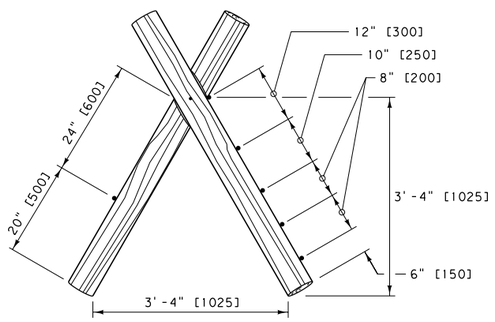

JACK AND WIRE ASSEMBLY

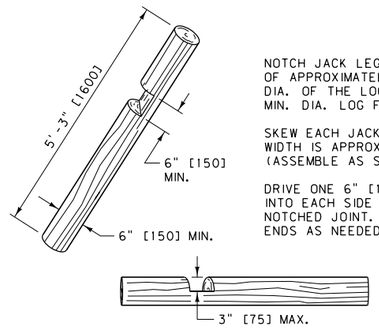

NOTCH JACK LEGS TO A DEPTH OF APPROXIMATELY ONE-HALF THE DIA. OF THE LOG. PROVIDE 6" [150] MIN. DIA. LOG FOR JACK LEG.

SKEW EACH JACK NOTCH AND ENSURE WIDTH IS APPROX. EQUAL TO LOG DIA. (ASSEMBLE AS SHOWN)

DRIVE ONE 6" [150] RINGED NAIL INTO EACH SIDE OF THE JACK THROUGH NOTCHED JOINT. CLINCH PROTRUDING NAIL ENDS AS NEEDED.

JACK LEG NOTCHING

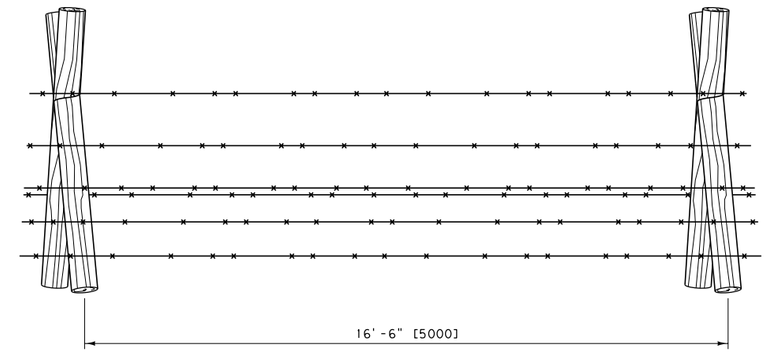

LINE JACK SPACING

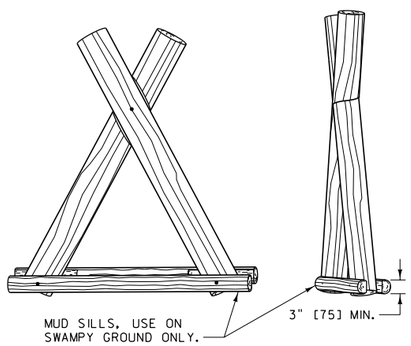

MUD SILL

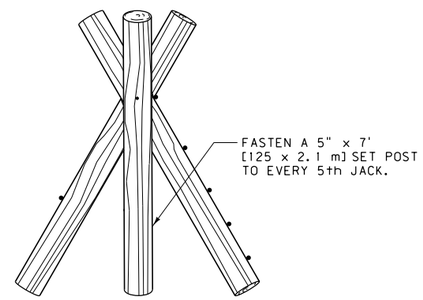

SET POST BRACE

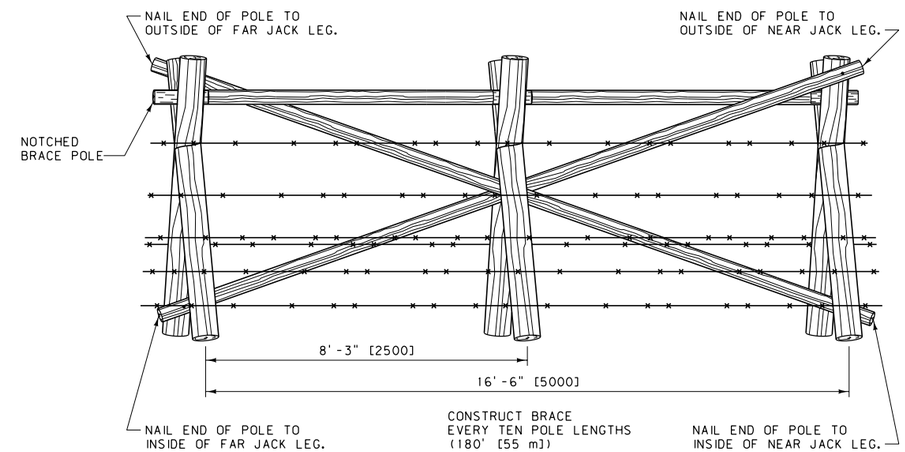

BRACED PANEL

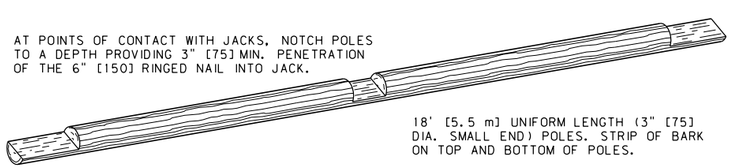

BRACE POLE NOTCHING

NOTE: ALL POLES, POSTS, RAILS, OR WOOD ITEMS WILL BE TREATED.

UNITS SHOWN IN BRACKETS [] ARE METRIC AND ARE IN MILLIMETERS (mm) UNLESS OTHER UNITS ARE SHOWN.

DETAILED DRAWING	
REFERENCE STANDARD SPEC. SECTION 607	DWG. NO. 607-55
JACKLEG WIRE FENCE	
EFFECTIVE: SEPTEMBER 2014	

MDT MONTANA DEPARTMENT OF TRANSPORTATION

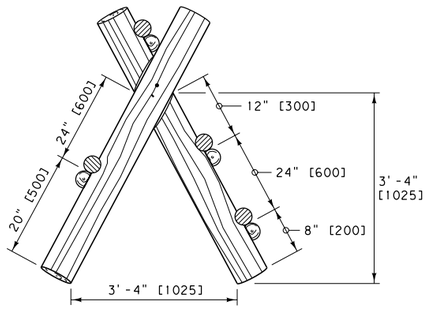

JACK AND POLE ASSEMBLY

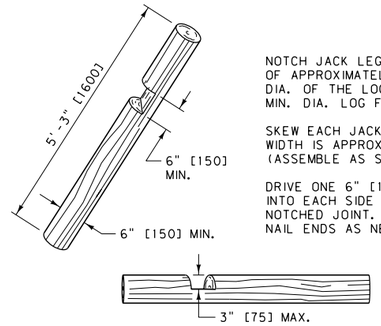

NOTCH JACK LEGS TO A DEPTH OF APPROXIMATELY ONE-HALF THE DIA. OF THE LOG. PROVIDE 6" [150] MIN. DIA. LOG FOR JACK LEG.

SKEW EACH JACK NOTCH AND ENSURE WIDTH IS APPROX. EQUAL TO LOG DIA. (ASSEMBLE AS SHOWN)

DRIVE ONE 6" [150] RINGED NAIL INTO EACH SIDE OF THE JACK THROUGH NOTCHED JOINT. CLINCH PROTRUDING NAIL ENDS AS NEEDED.

JACK LEG NOTCHING

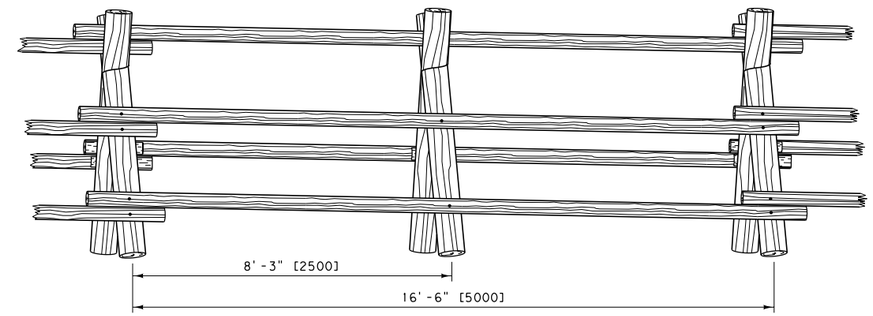

LINE JACK SPACING

AT POINTS OF CONTACT WITH JACKS, NOTCH POLES TO A DEPTH PROVIDING 3" [75] MIN. PENETRATION OF THE 6" [150] RINGED NAIL INTO JACK. (SEE DETAIL "A")

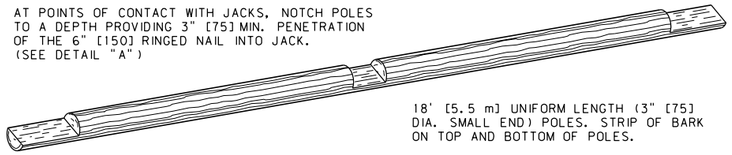

18' [5.5 m] UNIFORM LENGTH (3" [75] DIA. SMALL END) POLES. STRIP OF BARK ON TOP AND BOTTOM OF POLES.

POLE NOTCHING

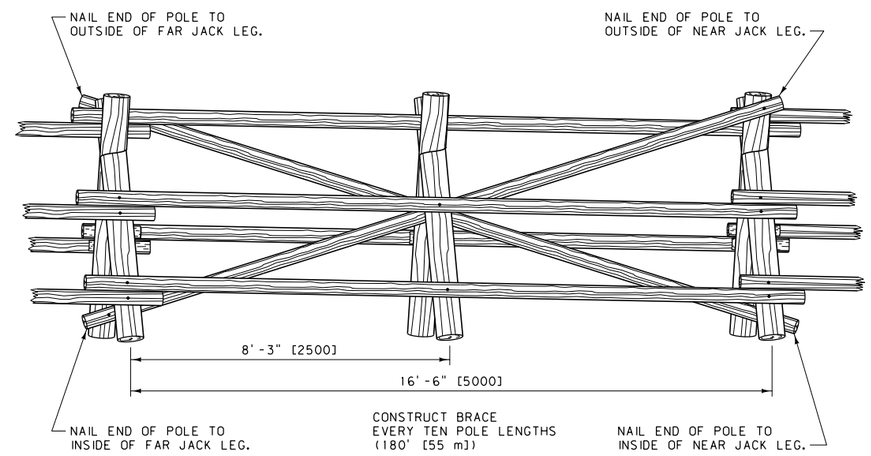

BRACED PANEL

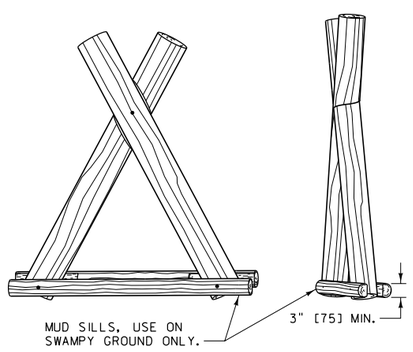

MUD SILL

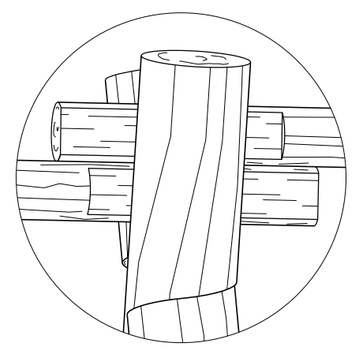

TYPICAL POLE NOTCHING AT JACK

DETAIL "A"

NOTE: ALL POLES, POSTS, RAILS, OR WOOD ITEMS WILL BE TREATED.

UNITS SHOWN IN BRACKETS [] ARE METRIC AND ARE IN MILLIMETERS (mm) UNLESS OTHER UNITS ARE SHOWN.

DETAILED DRAWING	
REFERENCE STANDARD SPEC. SECTION 607	DWG. NO. 607-60
JACKLEG POLE FENCE	
EFFECTIVE: SEPTEMBER 2014	

MDT MONTANA DEPARTMENT OF TRANSPORTATION

NOTES:

1/2" [13]EXPANSION JOINTS ARE SHOWN AS DARK SOLID LINES FOR VISUAL PURPOSES.

BOND BREAKER IS SHOWN AS DARK DASHED LINES FOR VISUAL PURPOSES.

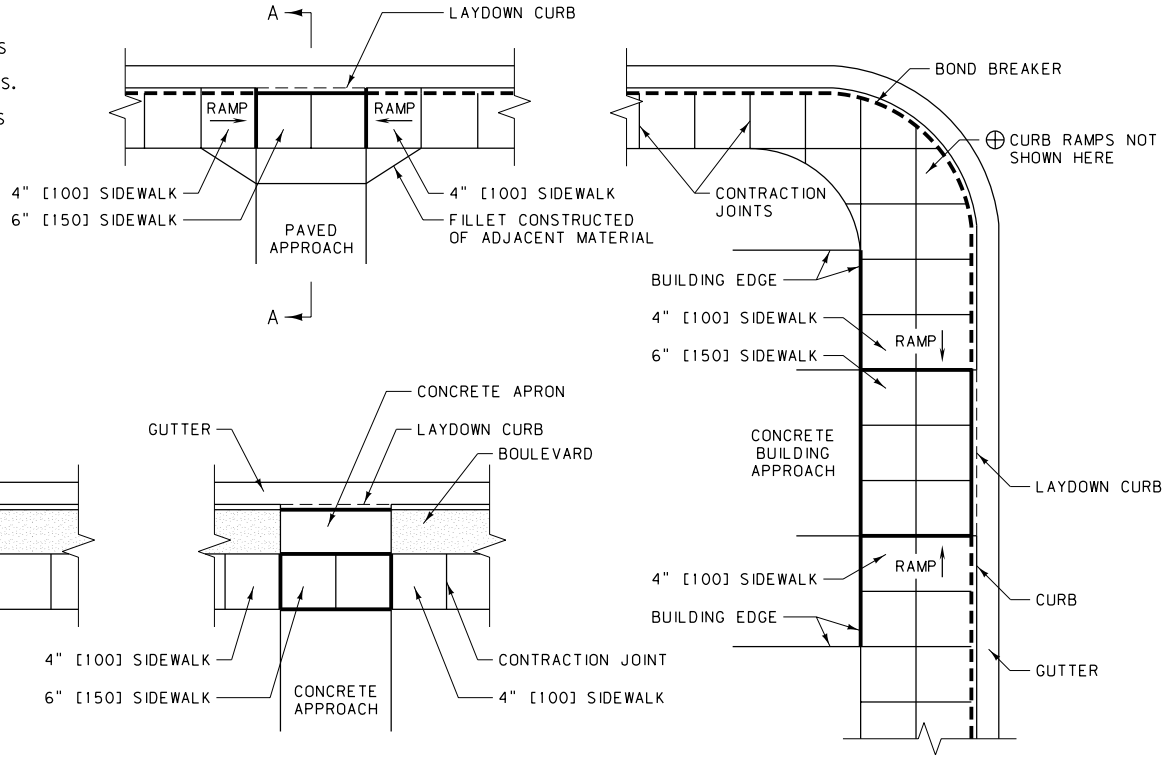

PLAN

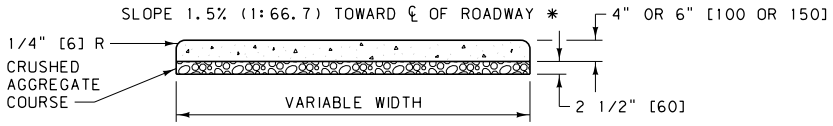

SECTION OF SIDEWALK

NOTE:
SEE DTL. DWG. NO. 609-05 FOR CURB & GUTTER DETAILS.

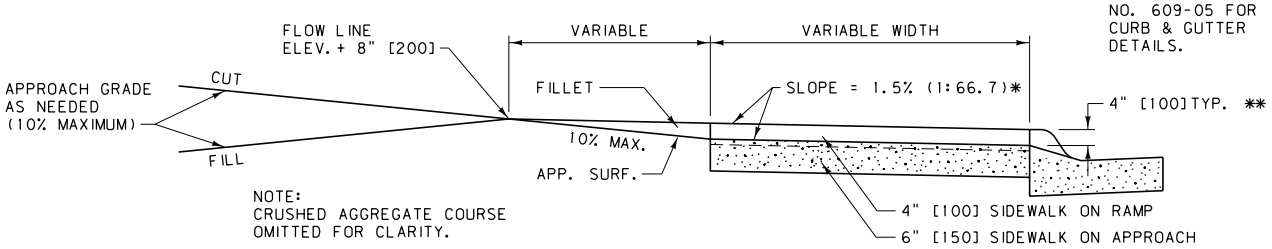

NOTE:
CRUSHED AGGREGATE COURSE OMITTED FOR CLARITY.

SECTION A-A

NOTES:

① INSTALL PREFORMED EXPANSION JOINT FILLER, PER SECTION 707, AT ALL EXPANSION JOINTS, FOR THE FULL THICKNESS OF THE SIDEWALK AND USE AT ALL JOINTS BETWEEN NEW CONCRETE SIDEWALK AND STRUCTURES IN PLACE.

② INSTALL A BOND BREAKER FOR THE FULL THICKNESS OF THE SIDEWALK AT LOCATIONS SPECIFIED ON THIS DETAIL. USE A 15 OR 30 POUND [6.8 OR 13.6 kg]ROOFING FELT MATERIAL, OR OTHER PRODUCT AS APPROVED BY THE PROJECT MANAGER, FOR THE BOND BREAKER. DO NOT USE EXPANSION JOINT MATERIAL AS A BOND BREAKER.

③ CONSTRUCT ALL JOINTS STRAIGHT AND PERPENDICULAR TO THE CENTERLINE AND THE SURFACE OF THE SIDEWALK. WHERE PRACTICAL, ALIGN ALL JOINTS WITH LIKE JOINTS IN ADJOINING WORK. USE JOINTS TO OUTLINE ALL PANELS IN THE SIDEWALK, WHICH ARE TO BE, SO FAR AS POSSIBLE, SQUARE. THE LENGTHS OF THE PANELS ARE DETERMINED BY THE WIDTH OF THE SIDEWALK.

④ WHERE RIGHT-OF-WAY PERMITS, NEW SIDEWALKS LESS THAN 5 FEET [1525]IN WIDTH MUST HAVE A PASSING AREA AT A MAXIMUM SPACING OF 200 FEET [61 m]. THE PASSING AREA IS A MINIMUM OF 5 FEET BY 5 FEET [1525 BY 1525]IN SIZE.

⑤ PROVIDE CONTRACTION JOINTS NO LESS THAN 1/8" [3]WIDE AND NO MORE THAN 1/4" [6]WIDE AND NO LESS THAN 1" [25]IN DEPTH. CONTRACTION JOINTS MAY BE CUT BY A GROOVE FORMING TOOL.

⑥ LOCATE EXPANSION JOINTS EVERY 100 FEET (± 30 FEET) [30 m (± 10 m)]AT INTERVALS EQUAL TO THE NEAREST MULTIPLE OF THE CONTRACTION JOINT INTERVAL.

⑦ USE A LONGITUDINAL CONTRACTION JOINT IN THE CENTERLINE OF ALL SIDEWALKS WIDER THAN 5 FEET [1525].

* THE MAXIMUM CROSS SLOPE OF THE SIDEWALK IS 2% (1:50).

** THIS DEPTH IS STANDARD IN NEW CONSTRUCTION. ALTERATIONS TO EXISTING FACILITIES MAY RESULT IN A LARGER DEPTH, WHICH WILL REQUIRE A GREATER RAMP LENGTH.

⊕ SEE DTL. DWG. NO. 608-15 AND 608-20 FOR GUIDELINES ON RAMP DESIGN WHEN RAMPS ARE REQUIRED FOR ADA ACCESSIBILITY.

UNITS SHOWN IN BRACKETS [] ARE METRIC AND ARE IN MILLIMETERS (mm) UNLESS OTHER UNITS ARE SHOWN.

DETAILED DRAWING	
REFERENCE STANDARD SPEC. SECTION 608	DWG. NO. 608-05
CONCRETE SIDEWALK	
EFFECTIVE: SEPTEMBER 2014	

MDT MONTANA DEPARTMENT OF TRANSPORTATION

CURB RAMP TYPES

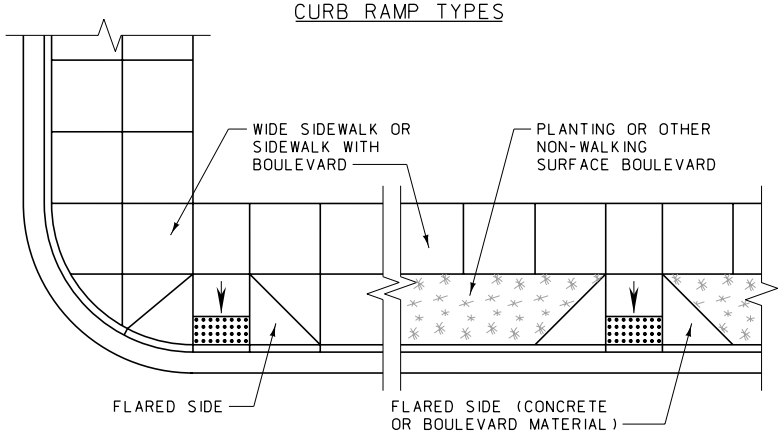

(A)

PERPENDICULAR PUBLIC SIDEWALK CURB RAMP (SEE DETAILED DRAWING NUMBER 608-25 FOR ADDITIONAL DETAILS)

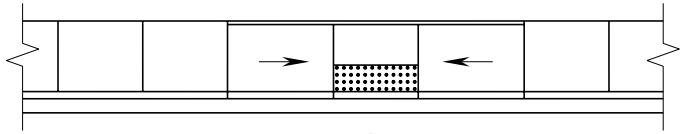

(B)

PARALLEL PUBLIC SIDEWALK CURB RAMP (SEE DETAILED DRAWING NUMBER 608-30 FOR ADDITIONAL DETAILS)

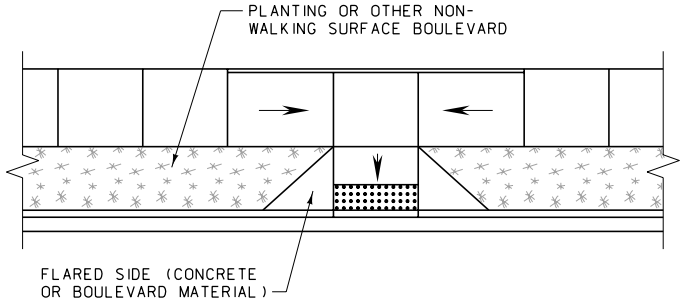

(C)

COMBINED (PARALLEL/PERPENDICULAR) PUBLIC SIDEWALK CURB RAMP (SEE DETAILED DRAWING NUMBERS 608-25 AND 608-30 FOR ADDITIONAL DETAILS)

GENERAL NOTES:

1. IN NEW CONSTRUCTION, USE PUBLIC SIDEWALK CURB RAMPS IN THE FOLLOWING ORDER OF PREFERENCE:

   A. PERPENDICULAR PUBLIC SIDEWALK CURB RAMP.
   B. PARALLEL PUBLIC SIDEWALK CURB RAMP.
   C. COMBINED (PARALLEL/PERPENDICULAR) PUBLIC SIDEWALK CURB RAMP.
   D. DIAGONAL PERPENDICULAR PUBLIC SIDEWALK CURB RAMP.

   SINGLE DIAGONAL OR DEPRESSED CORNER PUBLIC SIDEWALK CURB RAMPS SERVING TWO STREET CROSSING DIRECTIONS ARE NOT RECOMMENDED IN NEW CONSTRUCTION.

2. WHEN ALTERING EXISTING FACILITIES, MEET NEW CONSTRUCTION REQUIREMENTS FOR PUBLIC SIDEWALK CURB RAMPS TO THE MAXIMUM EXTENT FEASIBLE.

3. IF POSSIBLE, DO NOT PLACE DRAINAGE STRUCTURES IN CONFLICT WITH PUBLIC SIDEWALK CURB RAMPS. LOCATION OF CURB RAMPS TAKES PRECEDENCE OVER LOCATION OF DRAINAGE STRUCTURES EXCEPT WHERE EXISTING DRAINAGE STRUCTURES ARE BEING UTILIZED.

4. USE THE FLATTEST SLOPES POSSIBLE FOR ALL CURB RAMPS. MAXIMUM SLOPES ARE SHOWN FOR GUIDANCE AT DIFFICULT SITES.

5. FINAL FIELD LOCATION OF THE CURB RAMPS WILL BE DETERMINED BY THE PROJECT MANAGER.

6. IF R/W DOES NOT PERMIT LANDINGS FOR THESE RAMPS, USE ANOTHER RAMP DESIGN.

7. PEDESTRIAN ACCESS POINTS AT CROSSWALKS ARE TO BE WHOLLY CONTAINED WITHIN THE CROSSWALK LINES.

8. FOR ADDITIONAL INFORMATION CONSULT:

   DRAFT PUBLIC RIGHTS-OF-WAY ACCESSIBILITY GUIDELINES (PROWAG)

CONSTRUCTION REQUIREMENTS:

1. OBTAIN A SURFACE TEXTURE ON THE RAMP BY COARSE BROOMING, TRANSVERSE TO THE RAMP SLOPE.

2. TAKE CARE DURING CONSTRUCTION TO ASSURE UNIFORM RAMP GRADES, FREE OF SAGS AND SHARP GRADE CHANGES.

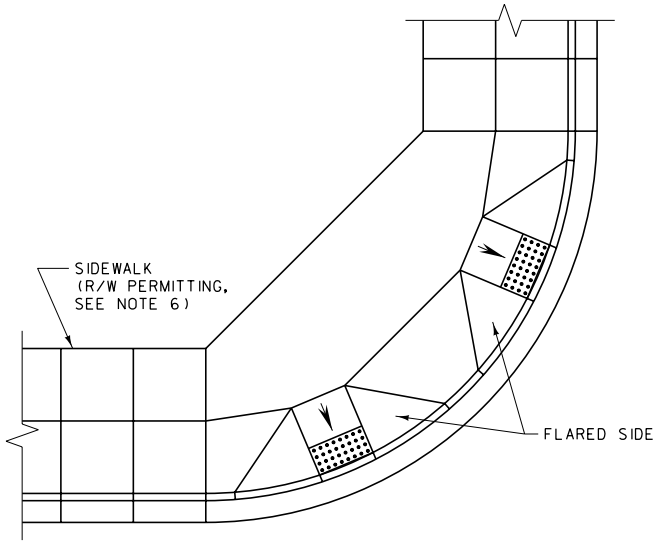

(D)

DIAGONAL PERPENDICULAR PUBLIC SIDEWALK CURB RAMP (SEE DETAILED DRAWING NUMBER 608-35 FOR ADDITIONAL DETAILS)

UNITS SHOWN IN BRACKETS [] ARE METRIC AND ARE IN MILLIMETERS (mm) UNLESS OTHER UNITS ARE SHOWN.

DETAILED DRAWING	
REFERENCE STANDARD SPEC. SECTION 608	DWG. NO. 608-15
NEW CONSTRUCTION PUBLIC SIDEWALK CURB RAMPS	
EFFECTIVE: SEPTEMBER 2014	

MDT MONTANA DEPARTMENT OF TRANSPORTATION

CURB RAMP TYPES

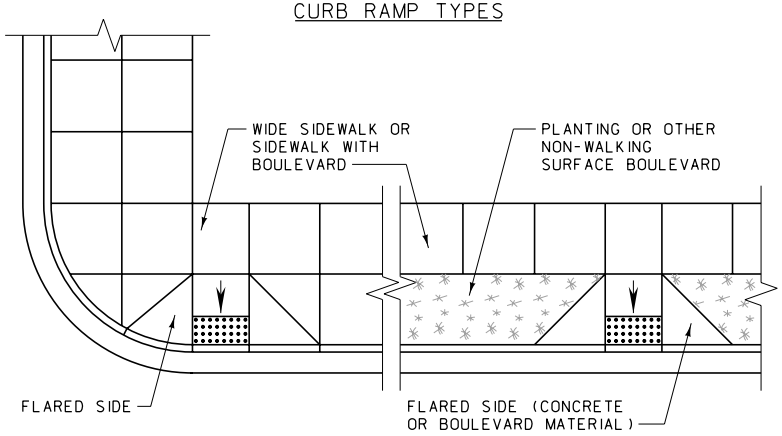

(A)

PERPENDICULAR PUBLIC SIDEWALK CURB RAMP (SEE DETAILED DRAWING NUMBER 608-25 FOR ADDITIONAL DETAILS)

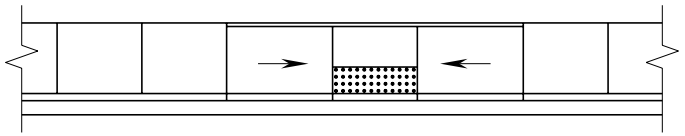

(B)

PARALLEL PUBLIC SIDEWALK CURB RAMP (SEE DETAILED DRAWING NUMBER 608-30 FOR ADDITIONAL DETAILS)

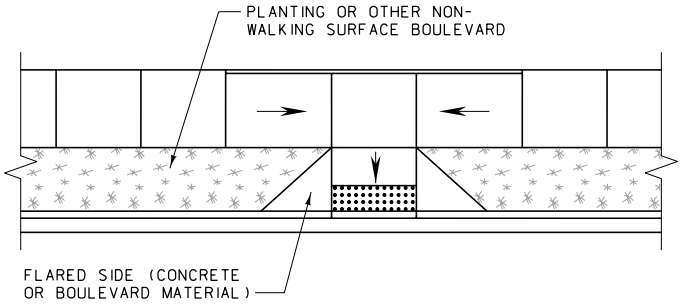

(C)

COMBINED (PARALLEL/PERPENDICULAR) PUBLIC SIDEWALK CURB RAMP (SEE DETAILED DRAWING NUMBERS 608-25 AND 608-30 FOR ADDITIONAL DETAILS)

CURB RAMP TYPES

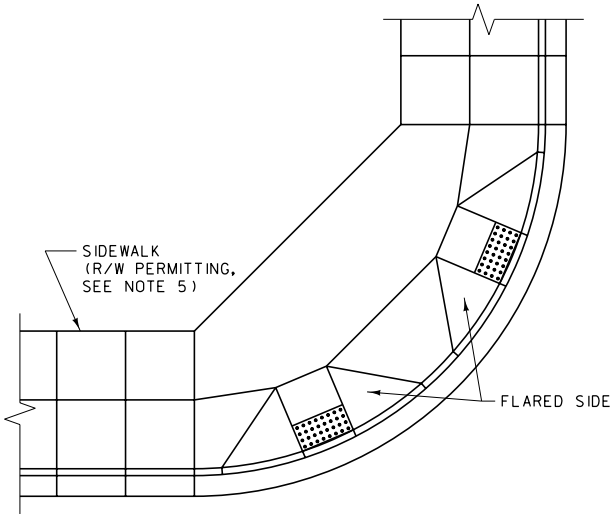

(D)

DIAGONAL PERPENDICULAR PUBLIC SIDEWALK CURB RAMP (SEE DETAILED DRAWING NUMBER 608-35 FOR ADDITIONAL DETAILS)

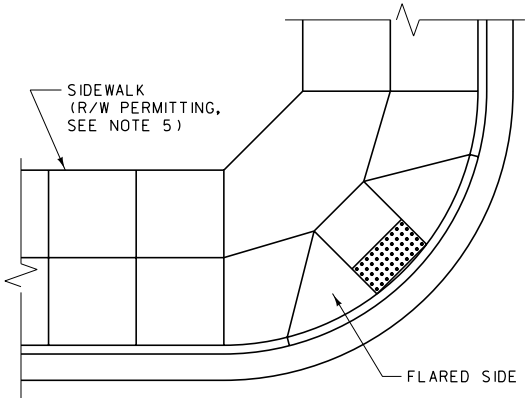

(E)

SINGLE DIAGONAL PERPENDICULAR PUBLIC SIDEWALK CURB RAMP (SEE DETAILED DRAWING NUMBER 608-35 FOR ADDITIONAL DETAILS)

GENERAL NOTES:

1. WHEN ALTERING EXISTING FACILITIES, USE PUBLIC SIDEWALK CURB RAMPS IN THE FOLLOWING ORDER OF PREFERENCE:

   A. PERPENDICULAR PUBLIC SIDEWALK CURB RAMP
   B. PARALLEL PUBLIC SIDEWALK CURB RAMP
   C. COMBINED (PARALLEL/PERPENDICULAR) PUBLIC SIDEWALK CURB RAMP
   D. DIAGONAL PERPENDICULAR PUBLIC SIDEWALK CURB RAMP
   E. SINGLE DIAGONAL PERPENDICULAR PUBLIC SIDEWALK CURB RAMP

   NOTE: USE DIAGONAL PUBLIC SIDEWALK CURB RAMPS AS THE LAST OPTION AND CONSTRUCT TO COMPLY WITH ALL ADA SLOPE AND CONSTRUCTION CRITERIA TO THE GREATEST EXTENT POSSIBLE.

2. PLACE CURB RAMPS TO AVOID EXISTING DRAINAGE STRUCTURES AND OTHER OBSTRUCTIONS TO THE GREATEST EXTENT POSSIBLE.

3. USE THE FLATTEST SLOPES POSSIBLE FOR ALL CURB RAMPS. MAXIMUM SLOPES ARE SHOWN FOR GUIDANCE AT DIFFICULT SITES AND SHOULD BE AVOIDED IF POSSIBLE.

4. FINAL FIELD LOCATION OF THE CURB RAMPS WILL BE DETERMINED BY THE PROJECT MANAGER.

5. IF R/W DOES NOT PERMIT LANDINGS FOR THESE RAMPS, USE ANOTHER RAMP DESIGN.

6. PEDESTRIAN ACCESS POINTS AT CROSSWALKS ARE TO BE WHOLLY CONTAINED WITHIN THE CROSSWALK LINES.

7. FOR ADDITIONAL INFORMATION CONSULT:

   DRAFT PUBLIC RIGHTS-OF-WAY ACCESSIBILITY GUIDELINES (PROWAG)

CONSTRUCTION REQUIREMENTS:

1. OBTAIN A SURFACE TEXTURE ON THE RAMP BY COARSE BROOMING, TRANSVERSE TO THE RAMP SLOPE.

2. PROVIDE UNIFORM RAMP GRADES FREE OF SAGS AND GRADE CHANGES.

UNITS SHOWN IN BRACKETS [] ARE METRIC AND ARE IN MILLIMETERS (mm) UNLESS OTHER UNITS ARE SHOWN.

DETAILED DRAWING	
REFERENCE STANDARD SPEC. SECTION 608	DWG. NO. 608-20
ALTERATIONS TO EXISTING FACILITIES - PUBLIC SIDEWALK CURB RAMPS	
EFFECTIVE: SEPTEMBER 2014	

MDT MONTANA DEPARTMENT OF TRANSPORTATION

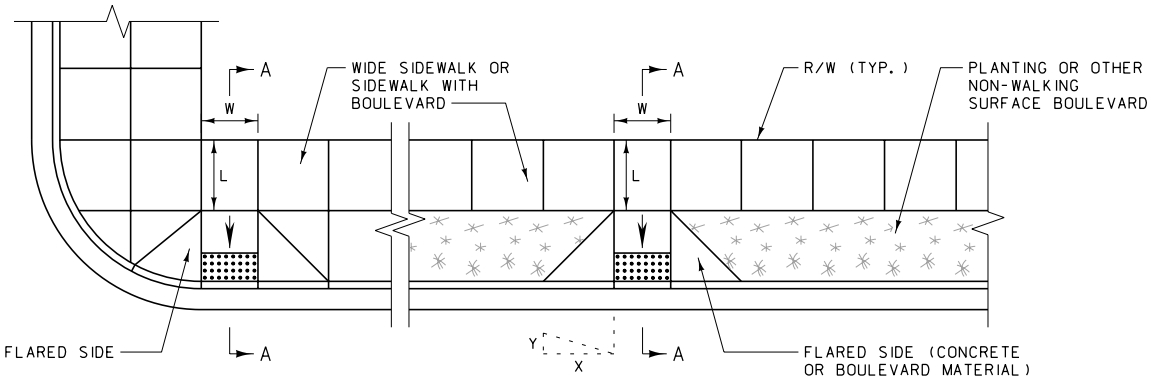

PERPENDICULAR PUBLIC SIDEWALK CURB RAMP

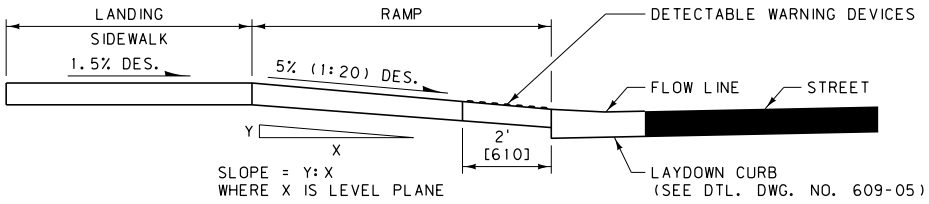

SECTION A-A

NEW CONSTRUCTION REQUIREMENTS:

1. THE DESIRABLE WIDTH OF THE CURB RAMP (DIMENSION "W" ABOVE) IS 5 FEET [1525 mm] OR WIDER. THE MINIMUM WIDTH ("W") IS 4 FEET [1220 mm].
2. THE DESIRABLE LENGTH OF THE LANDING AT THE TOP OF THE CURB RAMP (DIMENSION "L" ABOVE) IS 5 FEET [1525 mm]. THE MINIMUM LENGTH "L" IS 4 FEET [1220 mm]. THE LANDING WIDTH IS EQUAL TO THE RAMP WIDTH.
3. THE DESIRABLE SLOPE FOR THE CURB RAMP IS 5% (1:20) OR FLATTER. THE MAXIMUM CURB RAMP SLOPE IS 8.3% (1:12).
4. THE DESIRABLE SLOPE FOR THE FLARED SIDE OF THE CURB RAMP IS 8.3% (1:12) OR FLATTER. THE MAXIMUM FLARED SIDE SLOPE IS 10% (1:10).
5. THE DESIRABLE CROSS SLOPE OF THE SIDEWALK, RAMP, OR LANDING IS 1.5% (1:66.7). THE MAXIMUM CROSS SLOPE OF THE SIDEWALK, RAMP, OR LANDING IS 2% (1:50).
6. PROVIDE DETECTABLE WARNING DEVICES ON THE BOTTOM 2 FEET [610 mm] OF EACH RAMP AS SHOWN ABOVE. SEE DETAILED DRAWING NUMBER 608-40 FOR DETECTABLE WARNING DEVICES DETAILS.

REQUIREMENTS FOR ALTERATIONS TO EXISTING FACILITIES:

NOTE: WHEREVER POSSIBLE, ALTER EXISTING FACILITIES TO COMPLY WITH THE NEW CONSTRUCTION REQUIREMENTS.

1. THE MINIMUM WIDTH OF THE CURB RAMP (DIMENSION "W" ABOVE) IS 4 FEET [1220 mm].
2. WHERE RIGHT-OF-WAY WIDTH IS INSUFFICIENT TO ACCOMMODATE A TOP LANDING OF 5 FEET [1525 mm], PROVIDE A TOP LANDING OF 4 FEET [1220 mm]. THE LANDING WIDTH IS EQUAL TO THE RAMP WIDTH.
3. THE MAXIMUM CURB RAMP SLOPE IS 10% (1:10), PROVIDED THE RISE (DIMENSION "Y" ABOVE) IS 6 INCHES [150 mm] OR LESS. AN 8.3% (1:12) OR FLATTER SLOPE IS DESIRABLE.
4. THE MAXIMUM FLARED SIDE SLOPE IS 10% (1:10).
5. THE DESIRABLE CROSS SLOPE OF THE SIDEWALK, RAMP, OR LANDING IS 1.5% (1:66.7). THE MAXIMUM CROSS SLOPE OF THE SIDEWALK, RAMP, OR LANDING IS 2% (1:50).
6. PROVIDE DETECTABLE WARNING DEVICES ON THE BOTTOM 2 FEET [610 mm] OF EACH RAMP AS SHOWN ABOVE. SEE DETAILED DRAWING NUMBER 608-40 FOR DETECTABLE WARNING DEVICES DETAILS.
7. WHERE EXISTING SITE DEVELOPMENT CONDITIONS PROHIBIT THE STRICT AND FULL COMPLIANCE OF ALL ADA CRITERIA, PROVIDE ACCESSIBILITY TO THE MAXIMUM EXTENT FEASIBLE.

GENERAL NOTES:

1. WHERE THE RIGHT-OF-WAY WILL NOT ACCOMMODATE A PERPENDICULAR PUBLIC SIDEWALK CURB RAMP AND LANDING MEETING THESE REQUIREMENTS, USE A COMBINED (PARALLEL/PERPENDICULAR) OR PARALLEL PUBLIC SIDEWALK CURB RAMP.
2. COMBINED (PARALLEL/PERPENDICULAR) PUBLIC SIDEWALK CURB RAMPS ARE TO MEET THE CRITERIA FOR BOTH THE PARALLEL AND PERPENDICULAR PUBLIC SIDEWALK CURB RAMPS. (SEE DETAILED DRAWING NUMBER 608-30 AND THIS DRAWING.)

UNITS SHOWN IN BRACKETS [] ARE METRIC AND ARE IN MILLIMETERS (mm) UNLESS OTHER UNITS ARE SHOWN.

DETAILED DRAWING	
REFERENCE STANDARD SPEC. SECTION 608	DWG. NO. 608-25
PERPENDICULAR PUBLIC SIDEWALK CURB RAMPS	
EFFECTIVE: SEPTEMBER 2014	
MDT MONTANA DEPARTMENT OF TRANSPORTATION	

PARALLEL PUBLIC SIDEWALK CURB RAMPS

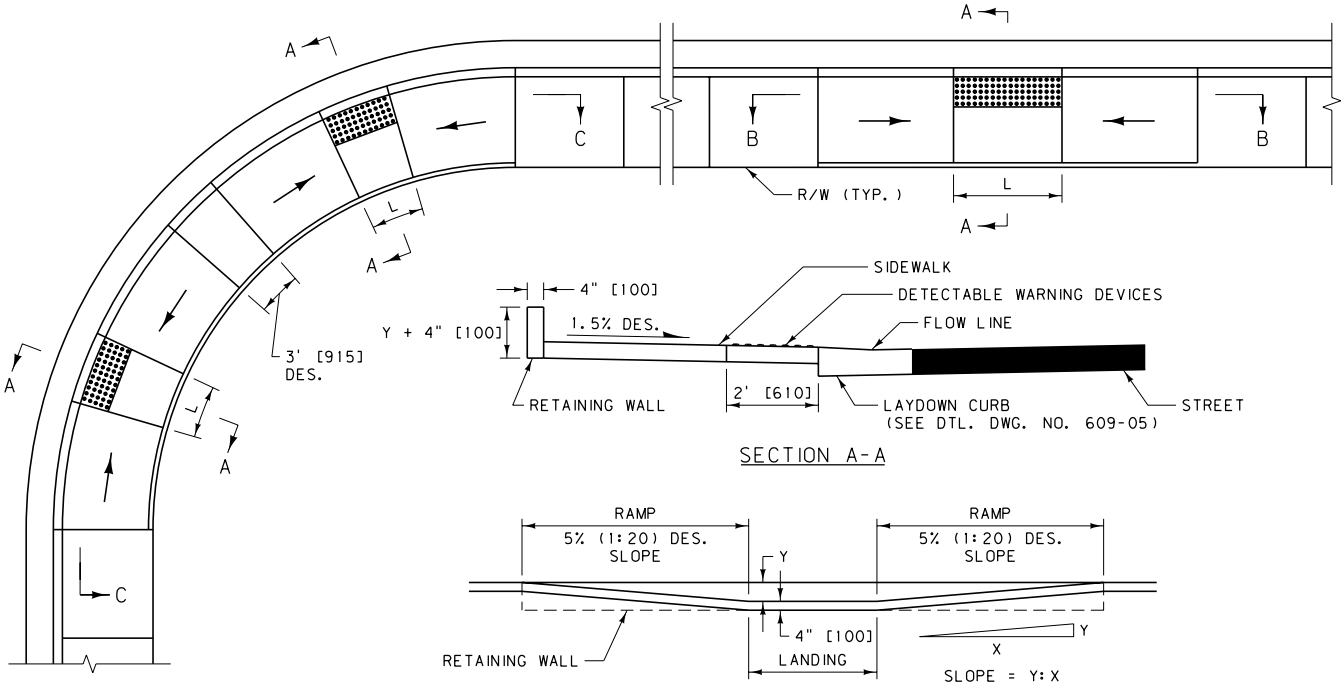

SECTION A-A

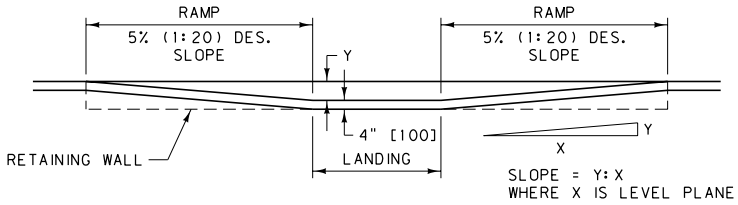

SECTION B-B

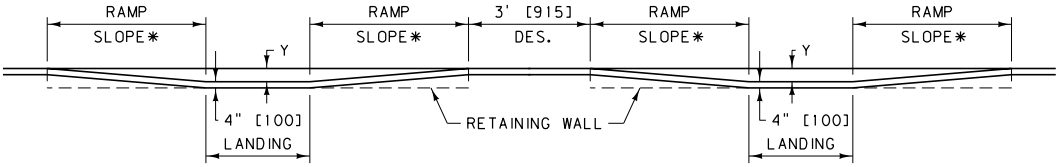

SECTION C-C

* 5% (1:20) DESIRABLE SLOPE

NEW CONSTRUCTION REQUIREMENTS:

1. THE MINIMUM LENGTH OF THE LANDING (DIMENSION "L" ABOVE) IS 5 FEET [1525 mm].
2. THE DESIRABLE SLOPE FOR THE CURB RAMPS IS 5% (1:20) OR FLATTER. THE MAXIMUM CURB RAMP SLOPE IS 8.3% (1:12).
3. THE DESIRABLE CROSS SLOPE OF THE SIDEWALK, RAMP, OR LANDING IS 1.5% (1:66.7). THE MAXIMUM CROSS SLOPE OF THE SIDEWALK, RAMP, OR LANDING IS 2% (1:50).
4. PROVIDE DETECTABLE WARNING DEVICES ON THE BOTTOM 2 FEET [610 mm] OF EACH LANDING AS SHOWN ABOVE. SEE DETAIL DRAWING NUMBER 608-40 FOR DETECTABLE WARNING DEVICES DETAILS.

REQUIREMENTS FOR ALTERATIONS TO EXISTING FACILITIES:

NOTE: WHEREVER POSSIBLE, ALTER EXISTING FACILITIES TO COMPLY WITH THE NEW CONSTRUCTION REQUIREMENTS.

1. THE DESIRABLE LENGTH OF THE LANDING (DIMENSION "L" ABOVE) IS 5 FEET [1525 mm]. THE MINIMUM LANDING LENGTH IS 4 FEET [1220 mm].
2. THE MAXIMUM CURB RAMP SLOPE IS 10% (1:10), PROVIDED THE RISE (DIMENSION "Y" ABOVE) IS 6 INCHES [150 mm] OR LESS. AN 8.3% (1:12) OR FLATTER SLOPE IS DESIRABLE.
3. THE DESIRABLE CROSS SLOPE OF THE SIDEWALK, RAMP, OR LANDING IS 1.5% (1:66.7). THE MAXIMUM CROSS SLOPE OF THE SIDEWALK, RAMP, OR LANDING IS 2% (1:50).
4. PROVIDE DETECTABLE WARNING DEVICES ON THE BOTTOM 2 FEET [610 mm] OF EACH LANDING AS SHOWN ABOVE. SEE DETAILED DRAWING NUMBER 608-40 FOR DETECTABLE WARNING DEVICES DETAILS.
5. WHERE EXISTING SITE DEVELOPMENT CONDITIONS PROHIBIT THE STRICT AND FULL COMPLIANCE OF ALL ADA CRITERIA, PROVIDE ACCESSIBILITY TO THE MAXIMUM EXTENT FEASIBLE.

GENERAL NOTES:

1. THE COST OF THE RETAINING WALL IS INCLUDED IN THE UNIT PRICE BID FOR CONCRETE SIDEWALK.
2. COMBINED (PARALLEL/PERPENDICULAR) PUBLIC SIDEWALK CURB RAMPS ARE TO MEET THE CRITERIA FOR BOTH THE PARALLEL AND PERPENDICULAR PUBLIC SIDEWALK CURB RAMPS. (SEE DETAILED DRAWING NUMBER 608-25 AND THIS DRAWING.)

UNITS SHOWN IN BRACKETS [] ARE METRIC AND ARE IN MILLIMETERS (mm) UNLESS OTHER UNITS ARE SHOWN.

DETAILED DRAWING	
REFERENCE STANDARD SPEC. SECTION 608	DWG. NO. 608-30
PARALLEL PUBLIC SIDEWALK CURB RAMPS	
EFFECTIVE: SEPTEMBER 2014	
MDT MONTANA DEPARTMENT OF TRANSPORTATION	

DIAGONAL PERPENDICULAR PUBLIC SIDEWALK CURB RAMP

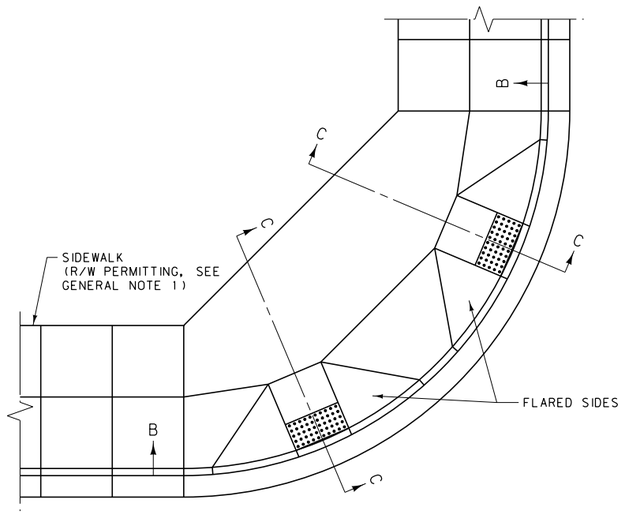

SINGLE DIAGONAL PERPENDICULAR PUBLIC SIDEWALK CURB RAMP

NOTE: SINGLE DIAGONAL PERPENDICULAR PUBLIC SIDEWALK CURB RAMPS SERVING TWO STREET CROSSING DIRECTIONS ARE NOT RECOMMENDED IN NEW CONSTRUCTION.

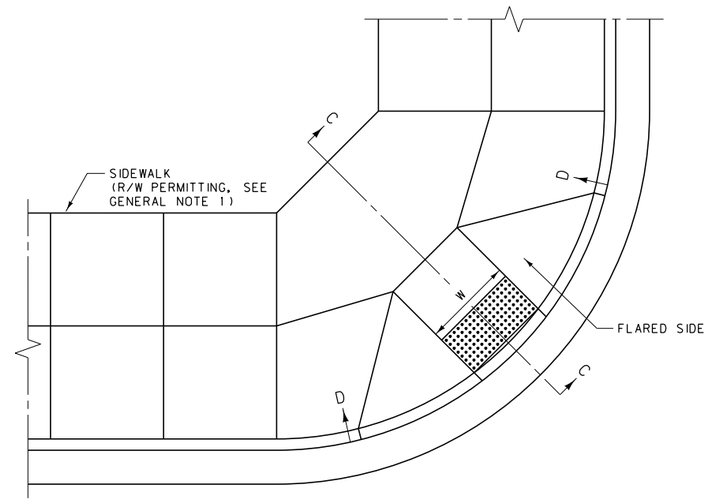

PRIVATE APPROACH SIDEWALK CURB RAMP

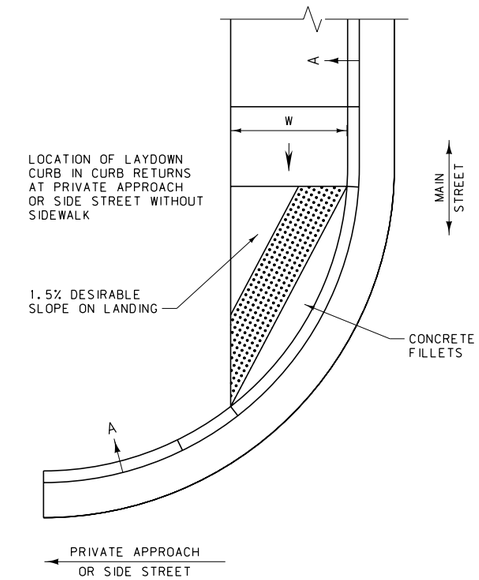

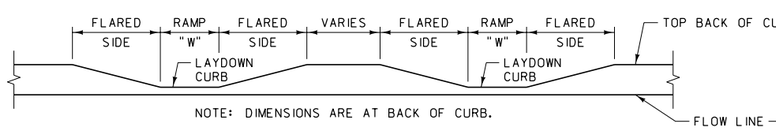

SECTION B-B

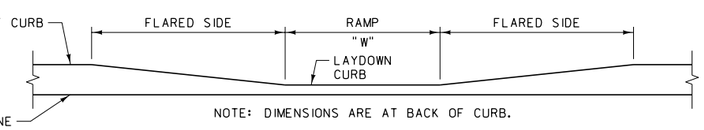

SECTION D-D

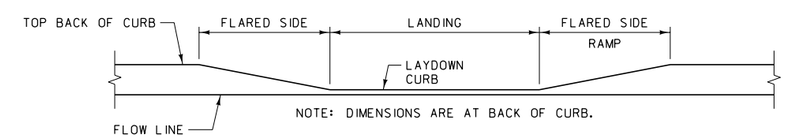

SECTION A-A

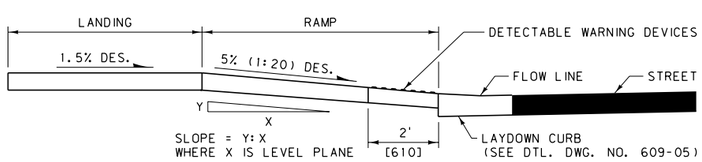

SECTION C-C

NEW CONSTRUCTION REQUIREMENTS:

1. THE DESIRABLE WIDTH OF THE CURB RAMP (DIMENSION "W" ABOVE) IS 5 FEET [1525 mm] OR WIDER. THE MINIMUM WIDTH ("W") IS 4 FEET [1220 mm].
2. THE DESIRABLE LENGTH OF THE LANDING AT THE TOP OF THE CURB RAMP IS 5 FEET [1525 mm]. THE MINIMUM LENGTH OF THE LANDING IS 4 FEET [1220 mm]. THE LANDING WIDTH IS EQUAL TO THE RAMP WIDTH.
3. THE DESIRABLE SLOPE FOR THE CURB RAMP IS 5% (1:20) OR FLATTER. THE MAXIMUM CURB RAMP SLOPE IS 8.3% (1:12).
4. THE DESIRABLE SLOPE FOR THE FLARED SIDE OF THE CURB RAMP IS 8.3% (1:12) OR FLATTER. THE MAXIMUM FLARED SIDE SLOPE IS 10% (1:10).
5. THE DESIRABLE CROSS SLOPE OF THE SIDEWALK, RAMP, OR LANDING IS 1.5% (1:66.7). THE MAXIMUM CROSS SLOPE OF THE SIDEWALK, RAMP, OR LANDING IS 2% (1:50).
6. PROVIDE DETECTABLE WARNING DEVICES ON THE BOTTOM 2 FEET [610 mm] OF EACH RAMP AS SHOWN ABOVE. SEE DETAILED DRAWING NUMBER 608-40 FOR DETECTABLE WARNING DEVICES DETAILS.

REQUIREMENTS FOR ALTERATIONS TO EXISTING FACILITIES:

NOTE: WHEREVER POSSIBLE, ALTER EXISTING FACILITIES TO COMPLY WITH THE NEW CONSTRUCTION REQUIREMENTS.

1. THE MINIMUM WIDTH OF THE CURB RAMP (DIMENSION "W" ABOVE) IS 4 FEET [1220 mm].
2. WHERE RIGHT-OF-WAY WIDTH IS INSUFFICIENT TO ACCOMMODATE A TOP LANDING OF 5 FEET [1525 mm], PROVIDE A TOP LANDING OF 4 FEET [1220 mm]. THE LANDING WIDTH IS EQUAL TO THE RAMP WIDTH.
3. THE MAXIMUM CURB RAMP SLOPE IS 8.3% (1:12), PROVIDED THE RISE (DIMENSION "Y" ABOVE) IS 6 INCHES [150 mm]OR LESS. A 7.5% (1:13.3) OR FLATTER SLOPE IS DESIRABLE.
4. THE MAXIMUM FLARED SIDE SLOPE IS 10% (1:10).
5. THE DESIRABLE CROSS SLOPE OF THE SIDEWALK, RAMP, OR LANDING IS 1.5% (1:66.7). THE MAXIMUM CROSS SLOPE OF THE SIDEWALK, RAMP, OR LANDING IS 2% (1:50).
6. PROVIDE DETECTABLE WARNING DEVICES ON THE BOTTOM 2 FEET [610 mm]OF EACH RAMP AS SHOWN ABOVE. SEE DETAILED DRAWING NUMBER 608-40 FOR DETECTABLE WARNING DEVICES DETAILS.
7. WHERE EXISTING SITE DEVELOPMENT CONDITIONS PROHIBIT THE STRICT AND FULL COMPLIANCE OF ALL ADA CRITERIA, PROVIDE ACCESSIBILITY TO THE MAXIMUM EXTENT FEASIBLE.

GENERAL NOTES:

1. WHERE THE RIGHT-OF-WAY WILL NOT ACCOMMODATE A DIAGONAL PERPENDICULAR PUBLIC SIDEWALK CURB RAMP AND LANDING MEETING THESE REQUIREMENTS, USE ANOTHER RAMP DESIGN.
2. TRIM PRECAST DETECTABLE WARNING DEVICES PANELS TO FIT ON PRIVATE APPROACH SIDEWALK CURB RAMPS AS SHOWN ABOVE.

UNITS SHOWN IN BRACKETS [] ARE METRIC AND ARE IN MILLIMETERS (mm) UNLESS OTHER UNITS ARE SHOWN.

DETAILED DRAWING	
REFERENCE STANDARD SPEC. SECTION 608	DWG. NO. 608-35
DIAGONAL PERPENDICULAR PUBLIC SIDEWALK CURB RAMPS	
EFFECTIVE: SEPTEMBER 2014	

MDT MONTANA DEPARTMENT OF TRANSPORTATION

CURB RAMP TYPES

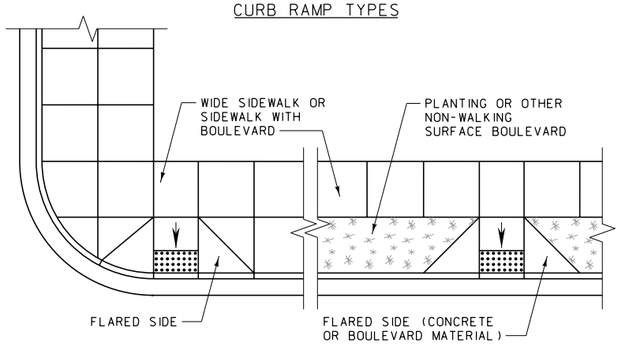

PERPENDICULAR PUBLIC SIDEWALK CURB RAMP (SEE DETAILED DRAWING NUMBER 608-25 FOR ADDITIONAL DETAILS)

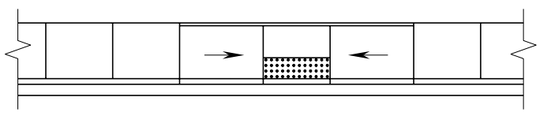

PARALLEL PUBLIC SIDEWALK CURB RAMP (SEE DETAILED DRAWING NUMBER 608-30 FOR ADDITIONAL DETAILS)

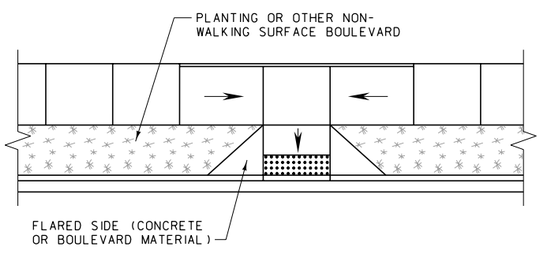

COMBINED (PARALLEL/PERPENDICULAR) PUBLIC SIDEWALK CURB RAMP (SEE DETAILED DRAWING NUMBERS 608-25 AND 608-30 FOR ADDITIONAL DETAILS)

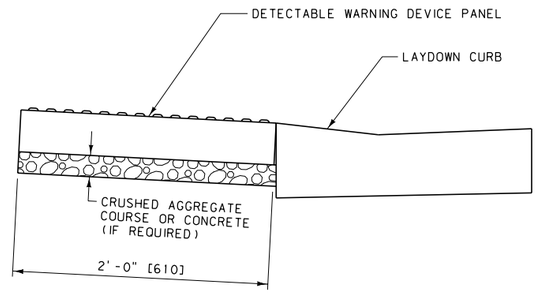

SIDE VIEW

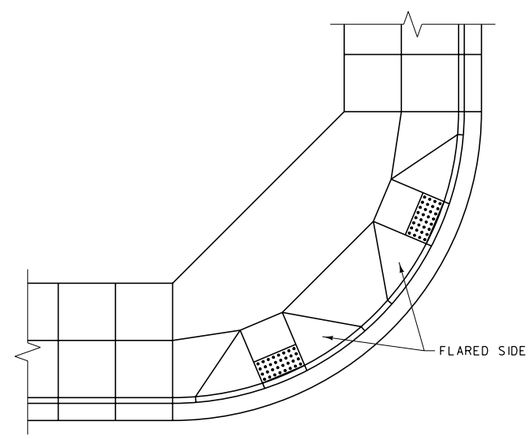

DIAGONAL PERPENDICULAR PUBLIC SIDEWALK CURB RAMP (SEE DETAILED DRAWING NUMBER 608-35 FOR ADDITIONAL DETAILS)

DETECTABLE WARNING DEVICE ALIGNMENT AND PATTERN

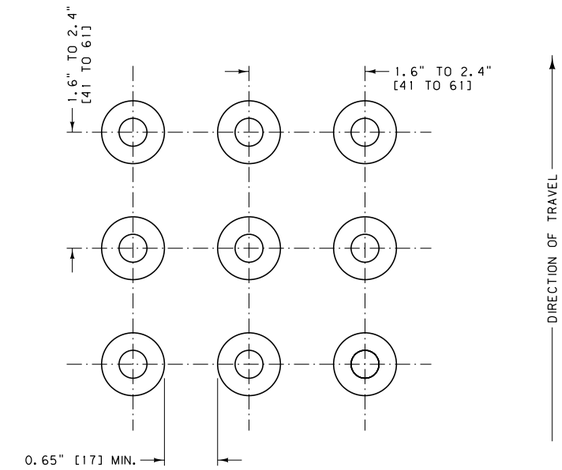

SQUARE PATTERN
PARALLEL ALIGNMENT

DOME PROFILE

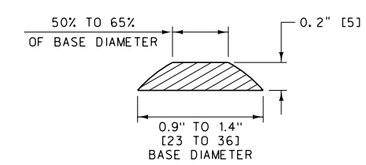

CONSTRUCTION REQUIREMENTS:

1. INSTALL DETECTABLE WARNING DEVICES THAT EXTEND THE FULL WIDTH OF THE RAMP, 2 FEET [610] IN DEPTH.
2. INSTALL THE DOME PANEL ADJACENT TO THE BACK OF CURB. IF THE PANEL IS OFFSET, LOCATE THE EDGE OF THE PANEL AS CLOSE AS PRACTICABLE TO THE BACK OF CURB.
3. IF THE DETECTABLE WARNING DEVICE IS EMBEDDED IN CONCRETE, INSTALL SO THE TOP OF THE PANEL IS FLUSH WITH THE ADJACENT CONCRETE AND THE DOMES WILL PROTRUDE ABOVE THE ADJACENT SURFACE.
4. ENSURE A UNIFORM GRADE ON THE DETECTABLE WARNING DEVICES FREE OF SAGS AND IRREGULAR EDGES.
5. USE DETECTABLE WARNING DEVICES - TYPE I FOR NEW SIDEWALK CONSTRUCTION. DETECTABLE WARNING DEVICES - TYPE I ARE CAST DIRECTLY INTO SIDEWALK. USE DETECTABLE WARNING DEVICES - TYPE II FOR RETROFITS ON EXISTING SIDEWALKS WHERE NEW CONCRETE IS NOT BEING PLACED. DETECTABLE WARNING DEVICES - TYPES II ARE SURFACE APPLIED ON THE SIDEWALK. MEET THE DEPARTMENT'S REQUIREMENTS ON THE QUALIFED PRODUCTS LIST (QPL) FOR DETECTABLE WARNING DEVICES - TYPE I AND FOR DETECTABLE WARNING DEVICES - TYPE II.
6. USE DETECTABLE WARNING DEVICES THAT VISUALLY CONTRAST WITH ADJACENT WALKWAY SURFACES.
7. ENSURE THE ALIGNMENT AND PATTERN OF THE DOMES IS CONTINUED ACROSS ANY JOINTS BETWEEN DETECTABLE WARNING DEVICE PANELS

UNITS SHOWN IN BRACKETS [] ARE METRIC AND ARE IN MILLIMETERS (mm) UNLESS OTHER UNITS ARE SHOWN.

DETAILED DRAWING	
REFERENCE STANDARD SPEC. SECTION 608	DWG. NO. 608-40
DETECTABLE WARNING DEVICES	
EFFECTIVE: SEPTEMBER 2014	

MDT MONTANA DEPARTMENT OF TRANSPORTATION

CURB RETURN FILLET REQUIRED FOR NEW CURB & GUTTER INSTALLATIONS (TYPICAL)

NOTE: INCLUDE COST OF CONCRETE FILLET IN VALLEY GUTTER.

EXISTING CURB & GUTTER INSTALLATION WITHOUT CURB RETURN FILLET

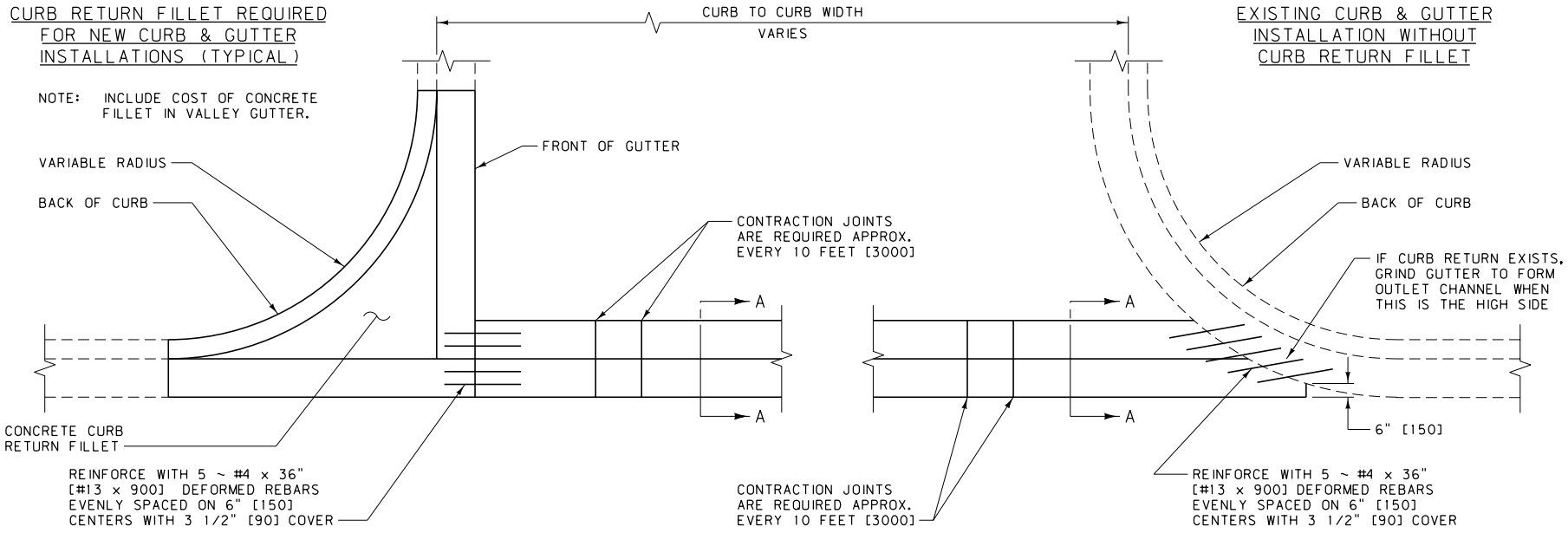

PLAN

NOTES:

1. INDIVIDUAL LOCATIONS MAY REQUIRE MORE DETAILS FOR ELEVATIONS AND DIMENSIONS.
2. INSTALL REINFORCEMENT AT ALL CONSTRUCTION JOINTS.
3. CONTRACTION JOINTS ARE 1/8" [3 mm] MIN. AND 3/8" [10 mm] MAX. IN WIDTH. FORM JOINTS BY SAWING OR SCORING TO A MINIMUM DEPTH OF 1" [25 mm]. FORM SCORED JOINTS BY A TOOL WHICH WILL LEAVE ROUNDED CORNERS AND DESTROY AGGREGATE INTERLOCK TO A MINIMUM DEPTH OF 1" [25 mm].
4. TO BE USED ON PLANT MIX SURFACING PROJECTS ONLY. PROVIDE PROJECT SPECIFIC DETAILS FOR PCCP PROJECTS.

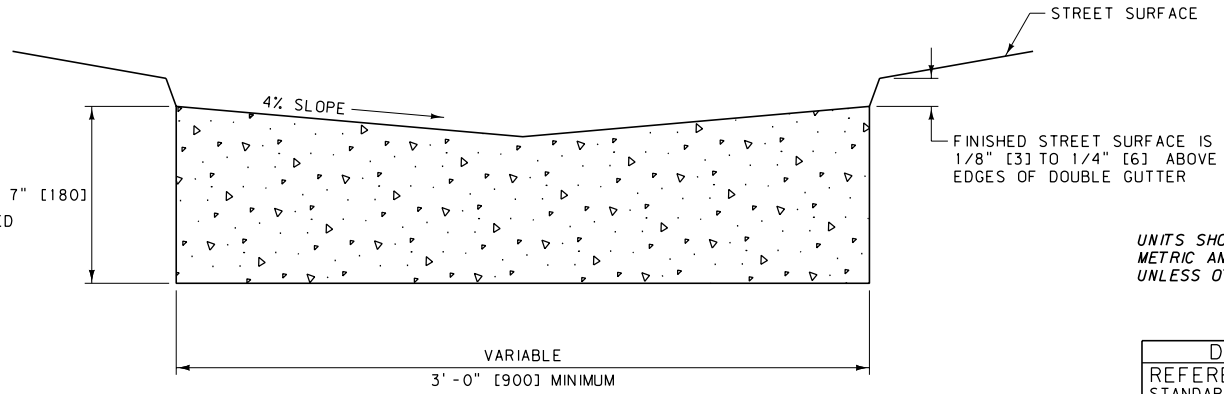

SECTION A-A

UNITS SHOWN IN BRACKETS [] ARE METRIC AND ARE IN MILLIMETERS (mm) UNLESS OTHER UNITS ARE SHOWN.

DETAILED DRAWING	
REFERENCE STANDARD SPEC. SECTION 609	DWG. NO. 609-00
CONCRETE VALLEY GUTTER	
EFFECTIVE: SEPTEMBER 2014	

MDT MONTANA DEPARTMENT OF TRANSPORTATION

CONCRETE CURBS

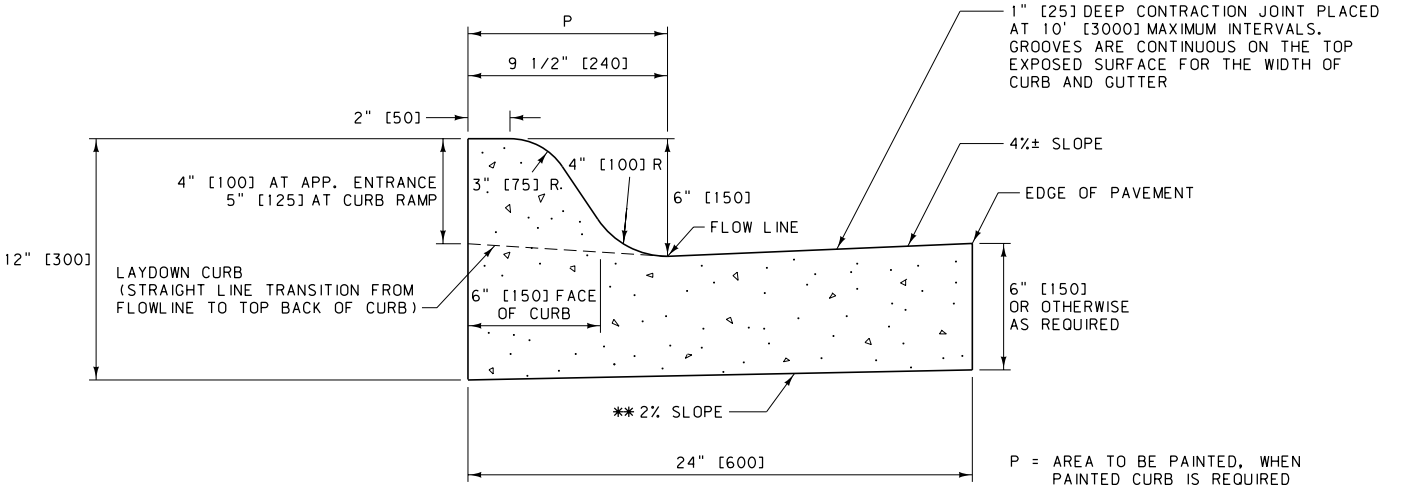

P = AREA TO BE PAINTED, WHEN PAINTED CURB IS REQUIRED (102 SQ. FT. PER 100 FT. OF CURB) [30.7 m² PER 100 m OF CURB]

CURB & GUTTER SECTION

0.048 C.Y. CONC. PER 1.0'
[0.110 CUBIC METERS CONC. PER METER]
OF CURB FOR 6" [150] GUTTER. *

JOINTS:

(A) WHEN INTEGRAL WITH, TIED TO, OR PLACED AGAINST PORTLAND CEMENT CONCRETE PAVEMENT (P.C.C.P.): MATCH TRANSVERSE CONTRACTION AND/OR EXPANSION JOINTS IN THE ADJACENT P.C.C.P. SLAB. IF REQUIRED, EXTEND 1/2" [13] MIN. WIDTH PREFORMED EXPANSION JOINTS COMPLETELY THROUGH CURB AND GUTTER THE SAME WIDTH AS THE P.C.C.P. SLAB JOINT. FILL CURB AND GUTTER EXPANSION JOINTS WITH PREFORMED EXPANSION JOINT FILLER.

(B) ALL OTHER CASES:
SPACE CONTRACTION JOINTS IN CURB AND GUTTER AT 10 FOOT [3000] INTERVALS OR LESS EXCEPT AS SPECIFIED IN (A) ABOVE. EXTEND 1/2" [13] MIN. WIDTH EXPANSION JOINTS COMPLETELY THROUGH CURB AND GUTTER EVERY 100 FEET [30 m] (± 30 FEET [10 m]), AT INTERVALS EQUAL TO THE NEAREST MULTIPLE OF THE CONTRACTION JOINT INTERVAL, AND FILL WITH EXPANSION JOINT FILLER.

(C) CONTRACTION JOINTS:
CONTRACTION JOINTS ARE 1/8" [3] MIN. AND 3/8" [10] MAX. IN WIDTH. FORM JOINTS BY SAWING OR SCORING TO A MINIMUM DEPTH OF 1" [25]. FORM SCORED JOINTS BY A TOOL WHICH WILL LEAVE ROUNDED CORNERS AND DESTROY AGGREGATE INTERLOCK TO A MINIMUM DEPTH OF 1" [25].

(D) OTHER JOINTS:
SEPARATE THE CURB AND GUTTER FROM ADJACENT SIDEWALK AT POINTS SHOWN ON DTL. DWG. NO. 608-05 WITH A BOND BREAKER MATERIAL, EXCEPT AT APPROACH LAYDOWN CURB LOCATIONS, WHICH REQUIRE SEPARATION USING 1/2" [13] MIN. WIDTH PREFORMED EXPANSION JOINT MATERIAL. PLACE 1/2" [13] MIN. WIDTH PREFORMED EXPANSION JOINT MATERIAL AT ALL CURB RETURNS, BRIDGES, DROP INLETS, AND WHERE MEETING CURB AND GUTTER IN PLACE.

EXPANSION JOINT FILLER MATERIAL:

USE PREFORMED EXPANSION JOINT FILLER MEETING THE REQUIREMENTS OF SECTION 707.

BOND BREAKER MATERIAL:

USE A 15 OR 30 POUND [6.8 OR 13.6 KILOGRAM] ROOFING FELT MATERIAL, OR OTHER PRODUCT AS APPROVED BY THE PROJECT MANAGER. DO NOT USE EXPANSION JOINT MATERIAL.

RADII:

MINIMUM CURB RETURN RADII = 10' [3000]. 15' [4500] RADII ARE DESIRABLE FOR STREETS.

CONCRETE:

UNLESS OTHERWISE SPECIFIED, CONSTRUCT CONCRETE CURBS AND CONCRETE INTEGRAL CURB AND GUTTER WITH CLASS GENERAL CONCRETE OR APPROVED EQUAL.

* QUANTITIES FOR ESTIMATING PURPOSES ONLY.

** THE SLOPE OF THE BOTTOM OF THE CURB AND GUTTER SHOULD MATCH THE SUPERELEVATION OF THE ROADWAY.

CONCRETE CURBS

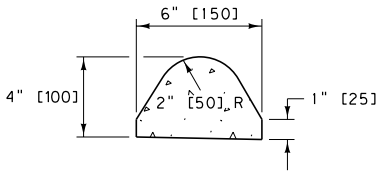

CURB SECTION

1 CUBIC FOOT OF CONCRETE WILL MAKE ABOUT 8 LINEAR FEET OF CURB. *
[1 CUBIC METER OF CONCRETE WILL MAKE ABOUT 89 METERS OF CURB]

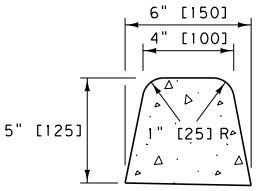

CURB SECTION

1 CUBIC FOOT OF CONCRETE WILL MAKE ABOUT 5 LINEAR FEET OF CURB. *
[1 CUBIC METER OF CONCRETE WILL MAKE ABOUT 64 METERS OF CURB]

NOTES:

1. WHEN CURB IS USED IN CONJUNCTION WITH GUARDRAIL, USE THE 4" [100] HIGH TYPE. OTHERWISE, THE CONTRACTOR MAY USE EITHER SECTION.
2. CONFORM ALL MATERIALS AND CONSTRUCTION PER SECTION 609.
3. PROVIDE CONTRACTION JOINTS IN CONCRETE CURBS AS DESCRIBED IN NOTE (B) ABOVE.

UNITS SHOWN IN BRACKETS [] ARE METRIC AND ARE IN MILLIMETERS (mm) UNLESS OTHER UNITS ARE SHOWN.

DETAILED DRAWING	
REFERENCE STANDARD SPEC. SECTION 609, 707	DWG. NO. 609-05
MISCELLANEOUS CURBS	
EFFECTIVE: SEPTEMBER 2014	
MDT MONTANA DEPARTMENT OF TRANSPORTATION	

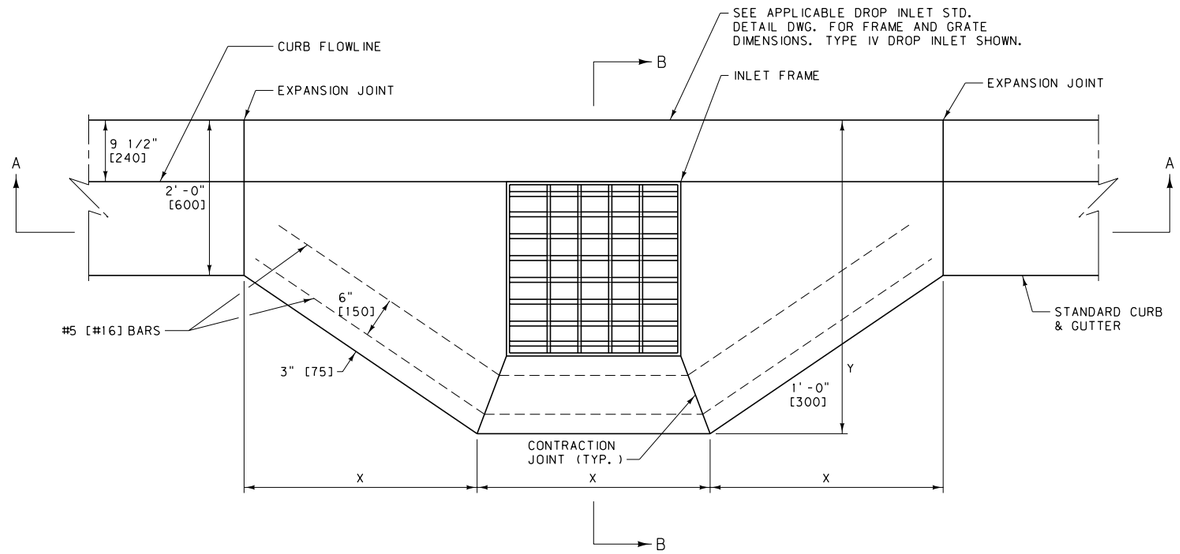

DROP INLET APRON
PLAN VIEW

INLET TYPE		LENGTH	
		FT	mm
TYPE IV	X	3'-0"	925
	Y	3'-11 1/2"	1200
TYPE I, III, V, VI	X	3'-7"	1100
	Y	4'-6 7/8"	1400

DROP INLET TYPE I, III, V, VI			
ROADWAY % CROSS SLOPE*	APRON ELEV. BELOW TOP BACK OF CURB		GRATE & APRON SLOPE %
	FT	m	
0	0.45	0.137	3.31
0.5	0.44	0.134	3.63
1.0	0.43	0.131	3.96
1.5	0.41	0.125	4.28
2.0	0.40	0.122	4.60
2.5	0.39	0.119	4.93
3.0	0.37	0.113	5.25
3.5	0.36	0.110	5.57
4.0	0.35	0.107	5.90
4.5	0.34	0.104	6.22

* SEE CROSS SECTIONS FOR CROSS SLOPES ON STREET.

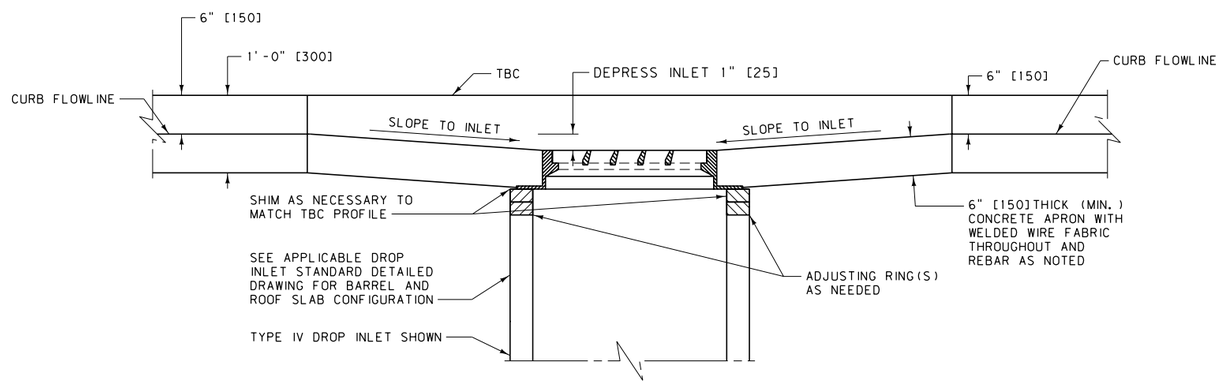

SECTION A-A

DROP INLET TYPE IV			
ROADWAY % CROSS SLOPE*	APRON ELEV. BELOW TOP BACK OF CURB		GRATE & APRON SLOPE %
	FT	m	
0	0.45	0.137	4.07
0.5	0.44	0.134	4.38
1.0	0.43	0.131	4.68
1.5	0.42	0.128	5.00
2.0	0.41	0.125	5.29
2.5	0.40	0.122	5.59
3.0	0.39	0.119	5.90
3.5	0.38	0.116	6.20
4.0	0.37	0.113	6.50
4.5	0.36	0.110	6.81

* SEE CROSS SECTIONS FOR CROSS SLOPES ON STREET.

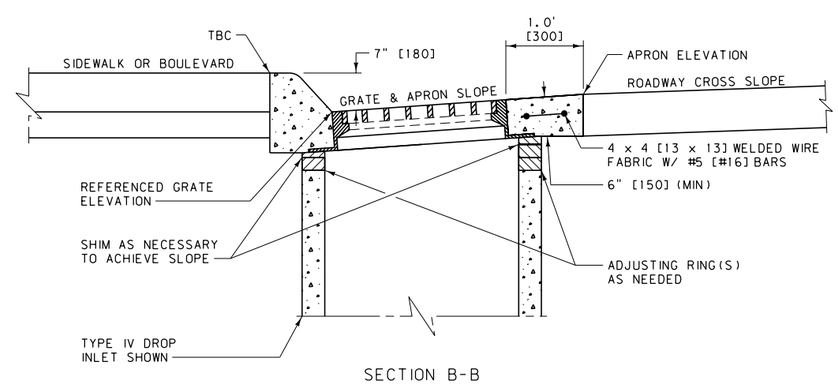

SECTION B-B

NOTES:

ALL CONCRETE IS CLASS GENERAL OR APPROVED EQUAL.

SHIM DROP INLET FRAME TO MATCH TBC PROFILE AND GRATE APRON SLOPE SHOWN IN THE TABLES. FILL SPACE BETWEEN GRATE AND ADJUSTING RING WITH CLASS GENERAL CONCRETE.

THE REFERENCED GRATE ELEVATION IS 1" LOWER THAN THE CURB FLOWLINE ELEVATION.

THE COST OF THE DROP INLET APRON IS INCLUDED IN THE UNIT PRICE BID FOR THE DROP INLET.

UNITS SHOWN IN BRACKETS [] ARE METRIC AND ARE IN MILLIMETERS (mm) UNLESS OTHER UNITS ARE SHOWN.

DETAILED DRAWING	
REFERENCE STANDARD SPEC. SECTION 609	DWG. NO. 609-07
DROP INLET APRONS	
EFFECTIVE: SEPTEMBER 2014	

MDT MONTANA DEPARTMENT OF TRANSPORTATION

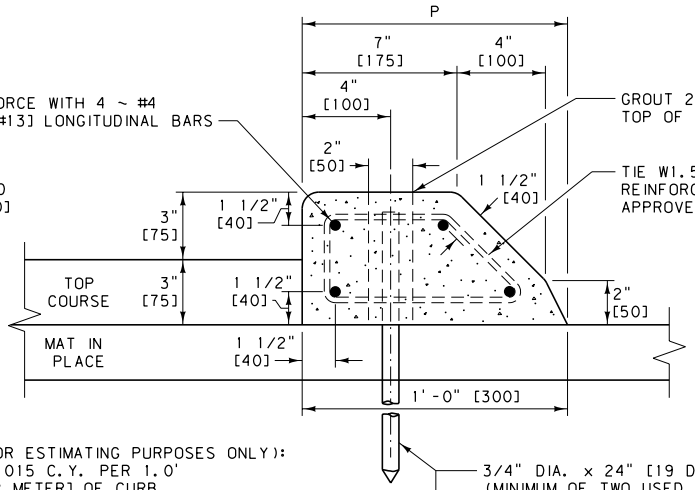

QUANTITIES (FOR ESTIMATING PURPOSES ONLY):
CONCRETE = 0.015 C.Y. PER 1.0'
[0.037 m³ PER METER] OF CURB
REINF. STEEL = 2.7 LB. PER 1.0'
[4.02 kg PER METER] OF CURB

P = AREA TO BE PAINTED, WHEN
PAINTED CURB IS REQUIRED
(127 SQ. FT. PER 100 FT.
[38.3 m² PER 100 m] OF CURB)

3/4" DIA. x 24" [19 DIA. x 610]PLAIN BAR
(MINIMUM OF TWO USED FOR EACH CURB SECTION,
MAXIMUM SPACING 6.0' [1830]). 3/4 " DIA. (#6)
[19 DIA. (#19)]REBAR IS AN ACCEPTABLE ALTERNATIVE

OR

1/2" DIA. (#4) x 24" [13 DIA. (#13) x 610]REBAR
(MINIMUM OF THREE USED FOR EACH CURB SECTION,
MAXIMUM SPACING 3'-4" [1000])

TYPE "A" - MAT IN PLACE

CONSTRUCTION:

1. CURBS MAY BE CONSTRUCTED USING ANY OF THE FOLLOWING THREE METHODS:
   (1) PRECAST
   (2) CAST IN PLACE
   (3) CONSTRUCTED BY THE USE OF AN APPROVED CURB FORMING OR SLIP FORM MACHINE.

2. WHEN USING EITHER METHOD (2) OR (3), REINFORCING STEEL IS NOT REQUIRED, WITH THE EXCEPTION OF THE PINS. SCORE OR SAW CUT CURBS TO A DEPTH OF 1" [25]TO FORM CONTRACTION JOINTS AT INTERVALS OF 10 FT. [3000]OR LESS. EXTEND 1/2" [13]MIN. WIDTH EXPANSION JOINTS COMPLETELY THROUGH CURB EVERY 100 FT. (± 30 FT.) [30 m (± 10 m)], AT INTERVALS EQUAL TO THE NEAREST MULTIPLE OF THE CONTRACTION JOINT INTERVAL AND FILL WITH PREFORMED EXPANSION JOINT FILLER MEETING SECTION 707.

3. FORM PRECAST CURBS IN THEIR INVERTED POSITION, IN LENGTHS NOT LESS THAN 4 FT. [1220], OR MORE THAN 10 FT. [3050].

MATERIAL:

1. CONSTRUCT CURBS WITH CLASS GENERAL CONCRETE OR AN APPROVED EQUIVALENT MIX.

2. EPOXY BINDER FOR GROUTING MUST MEET THE REQUIREMENTS OF (AASHTO M 235 [235 M]) (ASTM C 881 [881 M]).

UNITS SHOWN IN BRACKETS [] ARE METRIC AND ARE IN MILLIMETERS (mm) UNLESS OTHER UNITS ARE SHOWN.

DETAILED DRAWING	
REFERENCE STANDARD SPEC. SECTION 609, 707	DWG. NO. 609-10
MEDIAN CONCRETE CURBS	
EFFECTIVE: SEPTEMBER 2014	
MDT MONTANA DEPARTMENT OF TRANSPORTATION	

NOTES:

1/2" [13]EXPANSION JOINTS ARE SHOWN AS DARK SOLID LINES FOR VISUAL PURPOSES.

BOND BREAKER IS SHOWN AS DARK DASHED LINE FOR VISUAL PURPOSES.

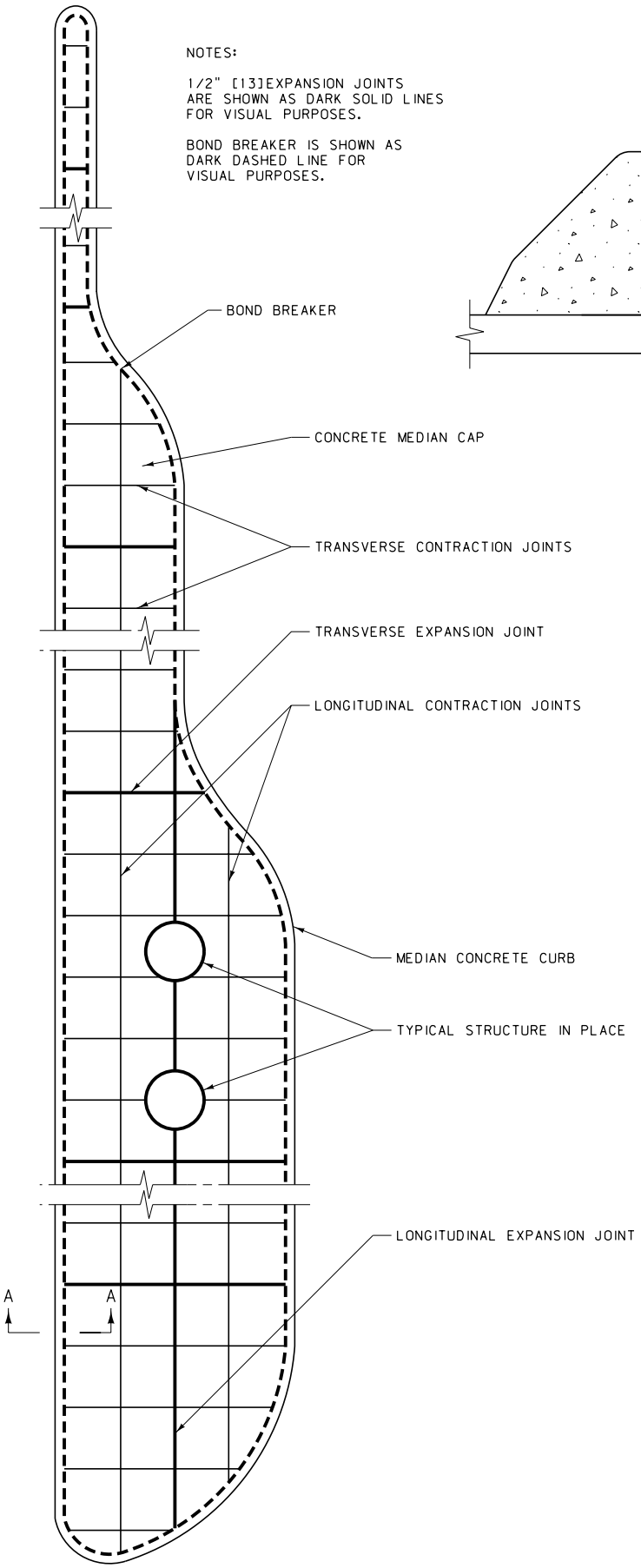

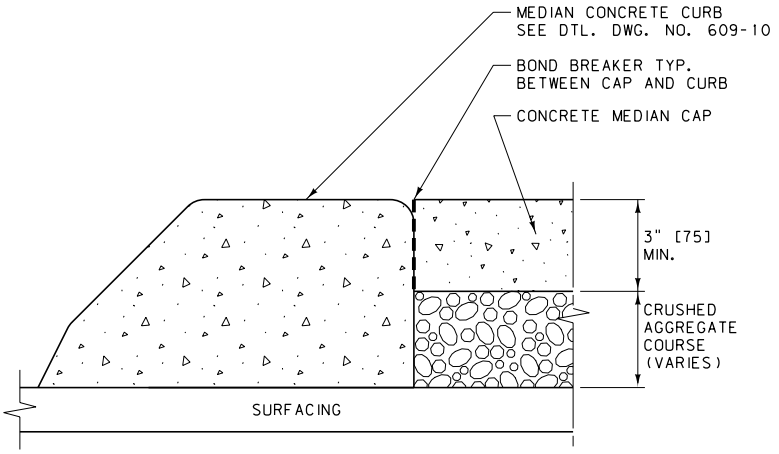

SECTION A-A

NOTES:

1. INSTALL PREFORMED EXPANSION JOINT FILLER, PER SECTION 707, AT ALL EXPANSION JOINTS, FOR THE FULL THICKNESS OF THE CONCRETE MEDIAN CAP.

2. INSTALL A BOND BREAKER FOR THE FULL THICKNESS OF THE CONCRETE MEDIAN CAP BETWEEN THE CAP AND THE CURB. USE A 15 OR 30 POUND [6.8 OR 13.6 kg]ROOFING FELT MATERIAL, OR OTHER PRODUCT AS APPROVED BY THE PROJECT MANAGER, FOR THE BOND BREAKER. DO NOT USE EXPANSION JOINT MATERIAL AS A BOND BREAKER.

3. ALL JOINTS MUST BE STRAIGHT AND PERPENDICULAR TO THE CENTERLINE AND THE SURFACE OF THE MEDIAN CAP. WHERE PRACTICAL, ALIGN ALL JOINTS WITH LIKE JOINTS IN ADJOINING WORK. USE JOINTS TO OUTLINE ALL PANELS IN THE MEDIAN CAP. USE SQUARE PANELS WHEN PRACTICAL. ON NARROW MEDIAN CAPS RECTANGULAR SHAPED PANELS ARE ACCEPTABLE.

4. PROVIDE CONTRACTION JOINTS NO LESS THAN 1/8" [3]WIDE AND NO MORE THAN 1/4" [6]WIDE AND NO LESS THAN 1" [25]IN DEPTH. CONTRACTION JOINTS MAY BE CUT BY A GROOVE FORMING TOOL.

5. LOCATE EXPANSION JOINTS AT ALL JOINTS BETWEEN THE MEDIAN CAP AND STRUCTURES IN PLACE AND EVERY 100 FT. (±30 FT.) [30 m (±10 m)]AT INTERVALS EQUAL TO THE NEAREST MULTIPLE OF THE CONTRACTION JOINT INTERVAL. USE A LONGITUDINAL EXPANSION JOINT IN THE CENTERLINE OF ALL MEDIAN CAPS WIDER THAN 12 FT. [3660].

6. USE LONGITUDINAL CONTRACTION JOINTS IN MEDIAN CAPS WIDER THAN 6 FT. [1830], WITH SPACING NOT TO EXCEED 6 FT. [1830]. SPACE TRANSVERSE CONTRACTION JOINTS EQUAL TO THE LONGITUDINAL SPACING ON MEDIAN CAPS WIDER THAN 6 FT. [1830]. FOR MEDIAN CAPS NARROWER THAN 6 FT. [1830], SPACE TRANSVERSE CONTRACTION JOINTS 10 FT. [3000]OR LESS.

7. CONSTRUCT CONCRETE MEDIAN CURB AND CAP WITH CLASS GENERAL CONCRETE OR APPROVED EQUAL.

UNITS SHOWN IN BRACKETS [] ARE METRIC AND ARE IN MILLIMETERS (mm) UNLESS OTHER UNITS ARE SHOWN.

DETAILED DRAWING	
REFERENCE STANDARD SPEC. SECTION 609, 707	DWG. NO. 609-12
CONCRETE MEDIAN CAPS	
EFFECTIVE: SEPTEMBER 2014	
MDT MONTANA DEPARTMENT OF TRANSPORTATION	

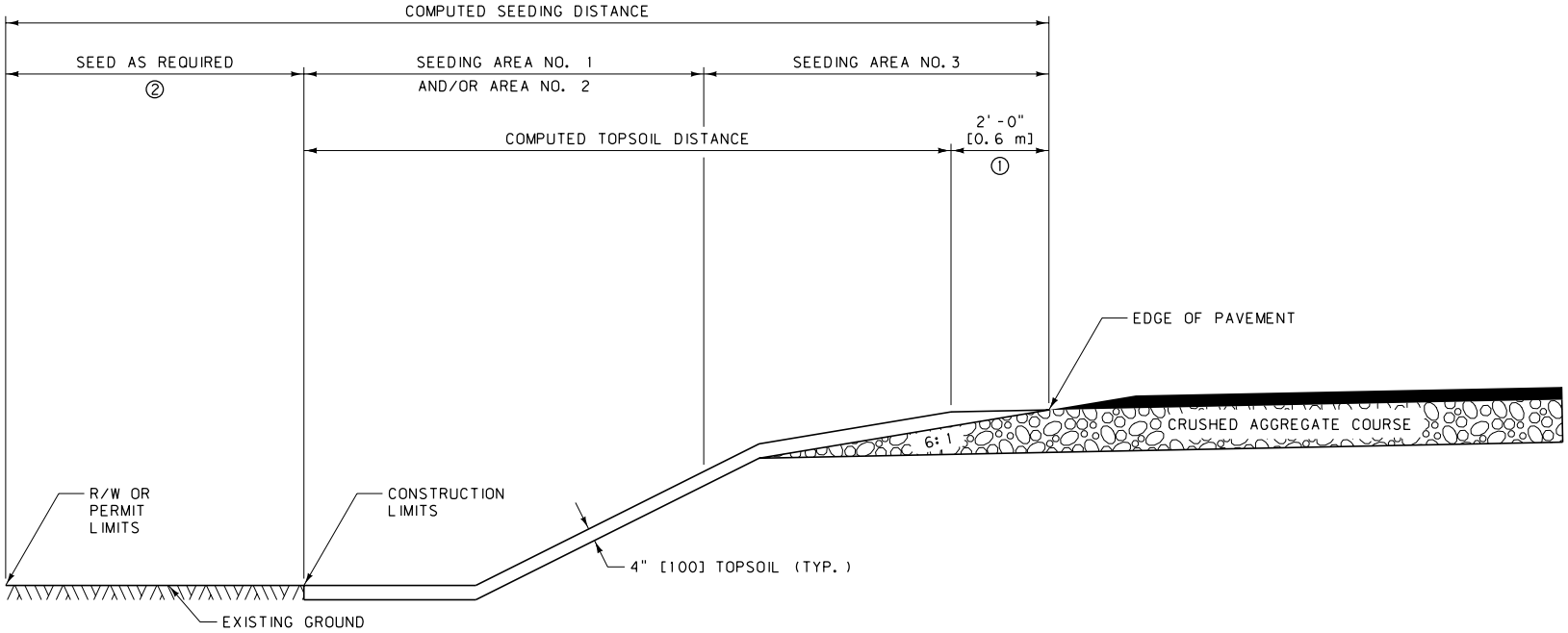

SEEDING		
AREA NO.	DEFINITION	TREATMENT
1	3:1 OR FLATTER SLOPES	CONDITION SEEDBED, SEED & FERTILIZE
2	STEEPER THAN 3:1 SLOPES	SEED, FERTILIZE & MULCH
3	15' [4.5 m] OR TO THE EDGE OF THE SURFACING INSLOPE, WHICHEVER IS GREATER	CONDITION SEEDBED & SEED

NOTES:

① PLACE TOPSOIL ON THE SURFACING INSLOPE TO A DEPTH OF 4" [100](±) NOT LESS THAN 2'-0" [0.6 m]FROM THE EDGE OF PAVEMENT. FEATHER TOPSOIL TO THE EDGE OF PAVEMENT.

② SEED AREAS BEYOND THE CONSTRUCTION LIMITS WITHIN THE RIGHT-OF-WAY OR PERMIT BOUNDARIES THAT HAVE BEEN DISTURBED (ie. STAGING AREAS, TOPSOIL PILES, EQUIPMENT TRAILS, etc.).

③ SALVAGE SUFFICIENT AMOUNTS OF TOPSOIL TO ASSURE QUANTITIES ARE AVAILABLE TO COVER ALL CLEARED AND GRUBBED AREAS WITH 4" [100]OF TOPSOIL. IF QUANTITIES ARE NOT AVAILABLE, RE-SPREAD TOPSOIL TO AN EVEN DEPTH ACROSS ALL DISTURBED GROUND.

UNITS SHOWN IN BRACKETS [] ARE METRIC AND ARE IN MILLIMETERS (mm) UNLESS OTHER UNITS ARE SHOWN.

DETAILED DRAWING

REFERENCE STANDARD SPEC. SECTION 610

DWG. NO. 610-00

TOPSOIL AND SEEDING

EFFECTIVE: SEPTEMBER 2014

MDT MONTANA DEPARTMENT OF TRANSPORTATION

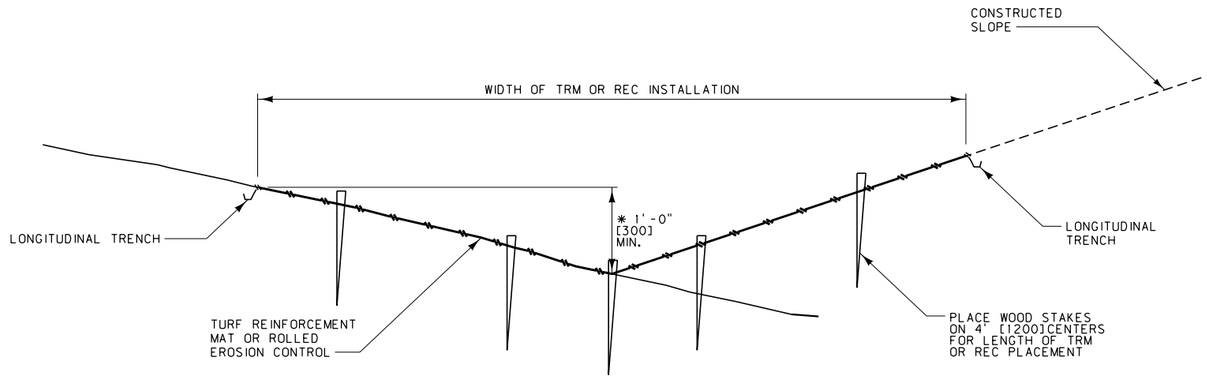

SLOPE INSTALLATION
* UNLESS OTHERWISE NOTED IN PLANS

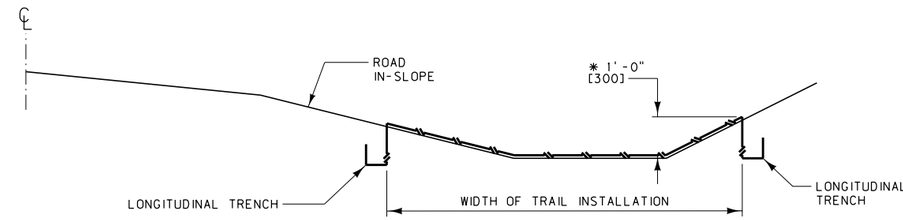

DITCH INSTALLATION
* UNLESS OTHERWISE NOTED IN PLANS

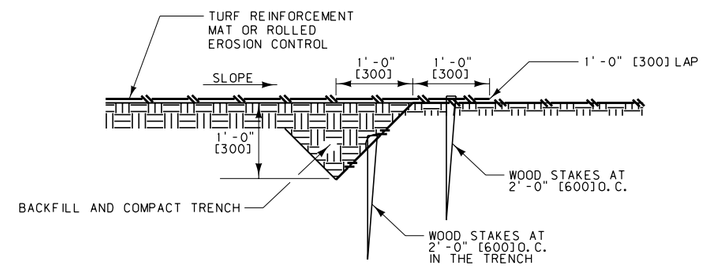

CHECK SLOT/CONSECUTIVE ROLL JOINT TRENCH

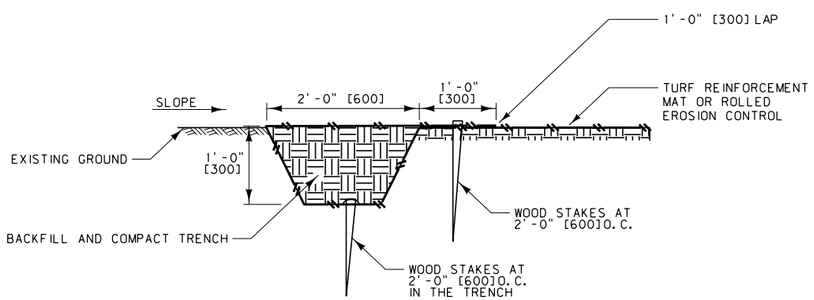

INITIAL ANCHOR TRENCH

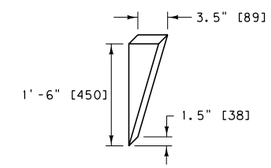

TRM WOOD STAKE

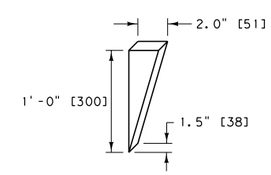

REC WOOD STAKE

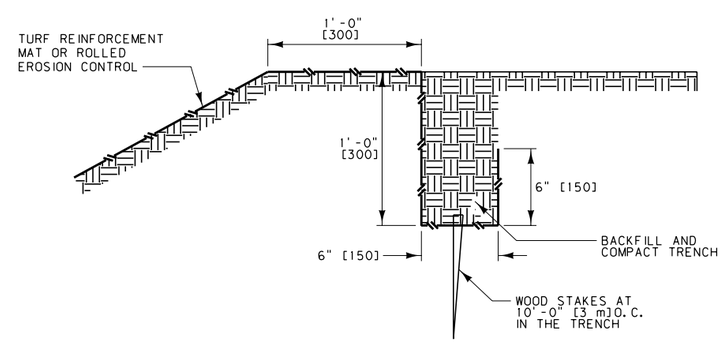

LONGITUDINAL TRENCH

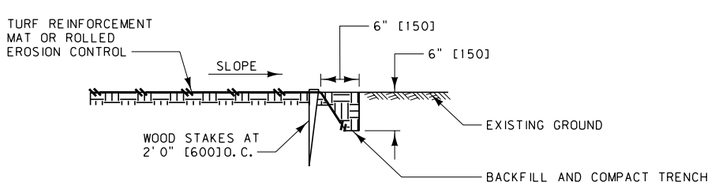

TERMINAL TRENCH

NOTES:

1. PROVIDE A SOIL SURFACE STABLE, FREE OF ROCKS, AND TO PLAN SPECIFICATIONS.
2. SEED, FERTILIZER, AND/OR APPLY OTHER SPECIFIED (IF APPLICABLE) SOIL AMENDMENTS PRIOR TO INSTALLATION. RAKE ALL SEED INTO THE UPPER 0.5" [13] OF SOIL PRIOR TO TRM OR REC PLACEMENT.
3. ONLY USE WOODEN STAKES THAT ARE OF THE SIZE AND DIMENSION SHOWN. METAL STAPLES ARE NOT ALLOWED.
4. UNROLL THE TRM OR REC PARALLEL TO THE PRIMARY DIRECTION OF FLOW AND PLACE IT IN DIRECT CONTACT WITH SOIL SURFACE. DO NOT STRETCH OR ALLOW TRM OR REC TO BRIDGE OVER SURFACE INCONSISTENCIES.
5. INITIAL ANCHOR TRENCH: PROVIDE AN INITIAL ANCHOR TRENCH AT THE BEGINING OF THE SLOPE OR DITCH INSTALLATION FOR THE PLAN WIDTH OF THE TRM OR REC.
6. TERMINAL TRENCH: PROVIDE A TERMINAL TRENCH AT THE END OF THE SLOPE OR DITCH INSTALLATION FOR THE PLAN WIDTH OF THE TRM OR REC.
7. CHECK SLOT/CONSECUTIVE ROLL JOINT TRENCH: PROVIDE A CHECK SLOT A MINIMUM OF EVERY 25' [7.6 m]. DO NOT LOCATE A CHECK SLOT AT A DITCH FLOWLINE OR WHERE A CONSTRUCED SLOPE AND IN-PLACE SLOPE MEET.

UNITS SHOWN IN BRACKETS [] ARE METRIC AND ARE IN MILLIMETERS (mm) UNLESS OTHER UNITS ARE SHOWN.

DETAILED DRAWING	
REFERENCE STANDARD SPEC. SECTION 610	DWG. NO. 610-05
TURF REINFORCEMENT MAT (TRM) AND ROLLED EROSION CONTROL (REC)	
EFFECTIVE: SEPTEMBER 2014	
MDT MONTANA DEPARTMENT OF TRANSPORTATION	

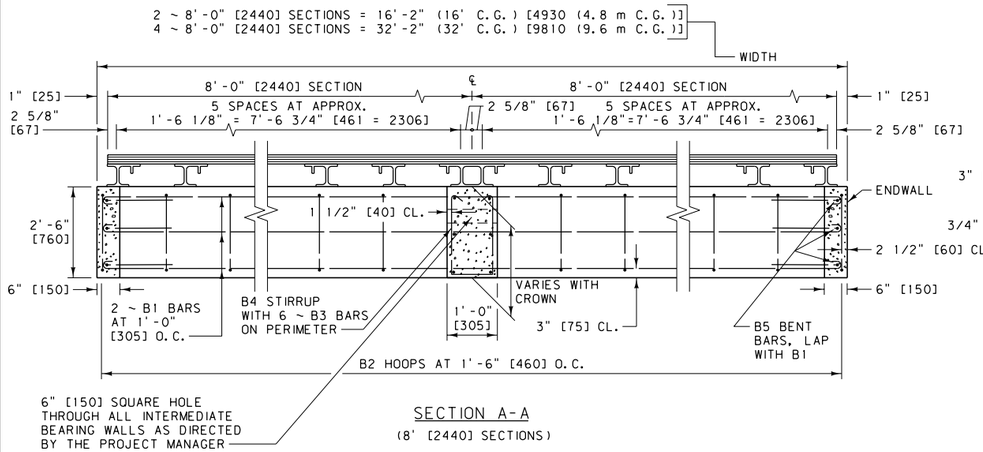

SECTION A-A

(8' [2440] SECTIONS)

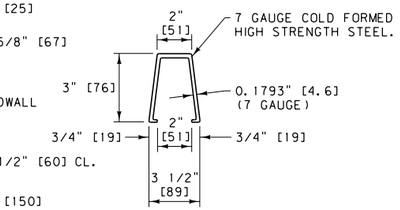

CROSSBAR

NOTE: WELD CROSSBARS TO 2 1/2" x 2 1/2" x 3/8" x 2'-1 1/2" [64 x 64 x 9.5 x 648] ANGLES HINGED AREA ONLY. SEE HINGE DETAIL.

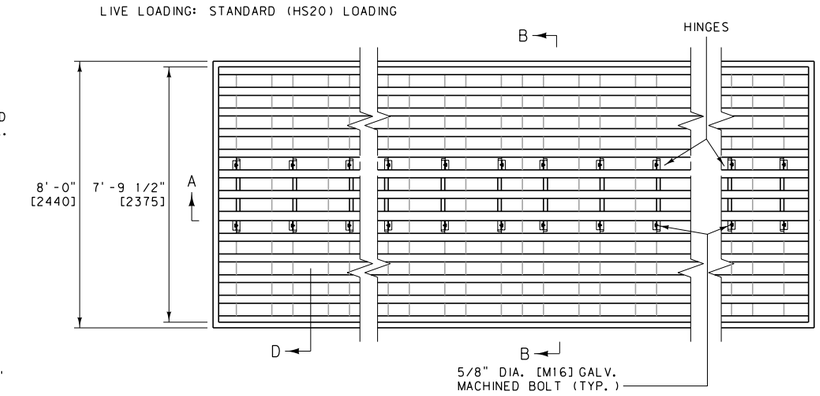

PLAN

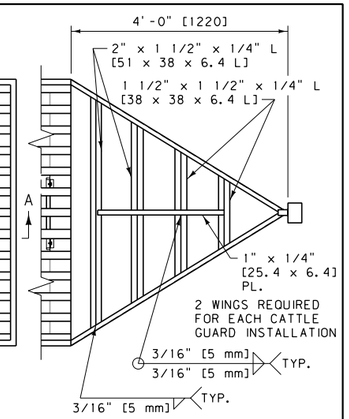

STEEL WING

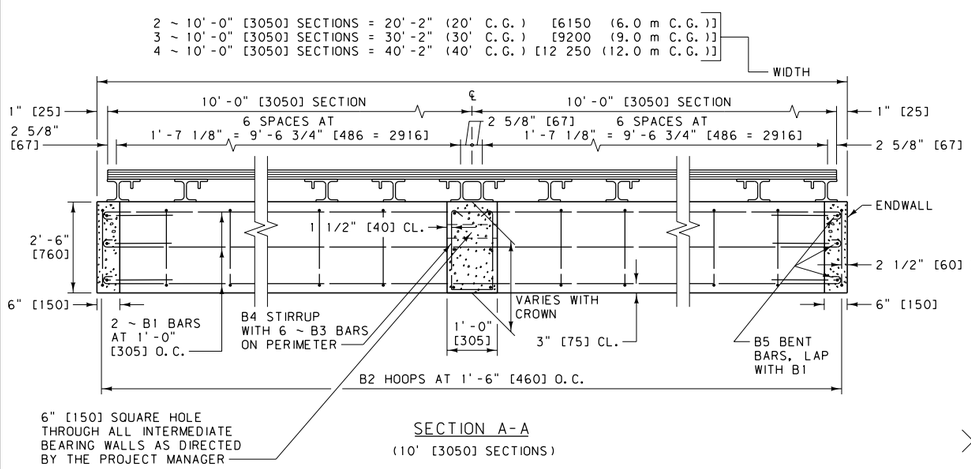

SECTION A-A

(10' [3050] SECTIONS)

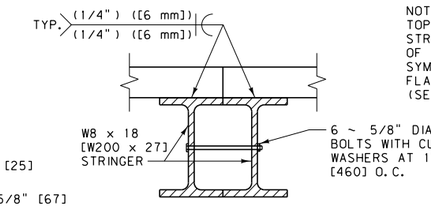

MULTIPLE INSTALLATION JOINT

NOTE: EXTEND END PLATE FROM TOP OF STRINGER TO BOTTOM OF STRINGER WITH 1'-4" [400] OF 1/8" [3] FILLET WELD SYMMETRICALLY DISTRIBUTED TO FLANGE AND WEB OF STRINGER. (SEE SECTION D)

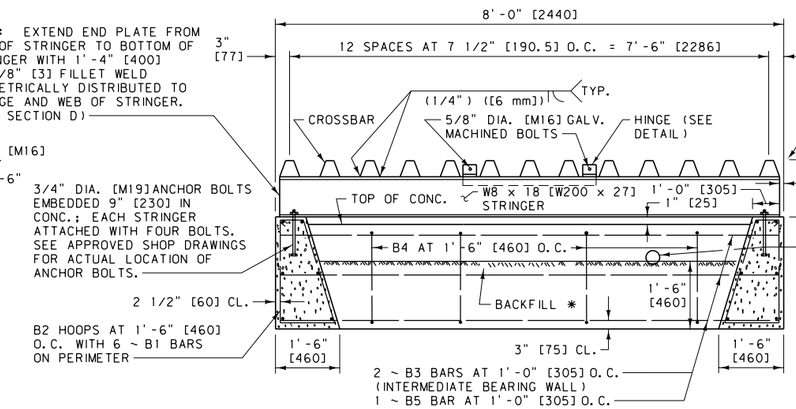

SEE ROAD PLANS FOR FINISHED GRADE AND CROWN OF ADJACENT ROAD SECTIONS.

NOTE: THIS DIMENSION VARIES. SEE APPROVED DRAWINGS FOR PROJECT BEFORE SETTING ANY FOOTING GRADES.

PLACE 4" [100] DIA. x 12" [305] DRAIN PIPE IN END WALLS AS DIRECTED BY THE PROJECT MANAGER.

* GRADE BACKFILL TO DRAIN TOWARD END WALLS.

MAX. FOOTING PRESS = 1.1 TONS/SQ. FT. [105 kpa]

SECTION B-B

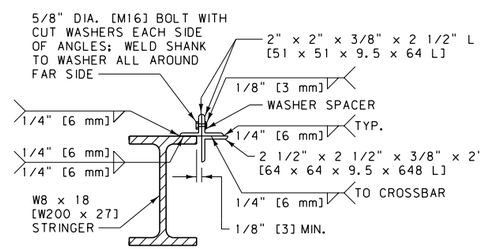

HINGE DETAIL

(HINGED AREA OPENS FOR CLEANOUT)

NOTE: LOCK DETAIL SIMILAR EXCEPT USE 5/8" DIA. [M16] GALV. MACHINED BOLT WITH GALV. CUT WASHER & GALV. HEX NUTS INSTEAD OF WELDED STUD BOLT.

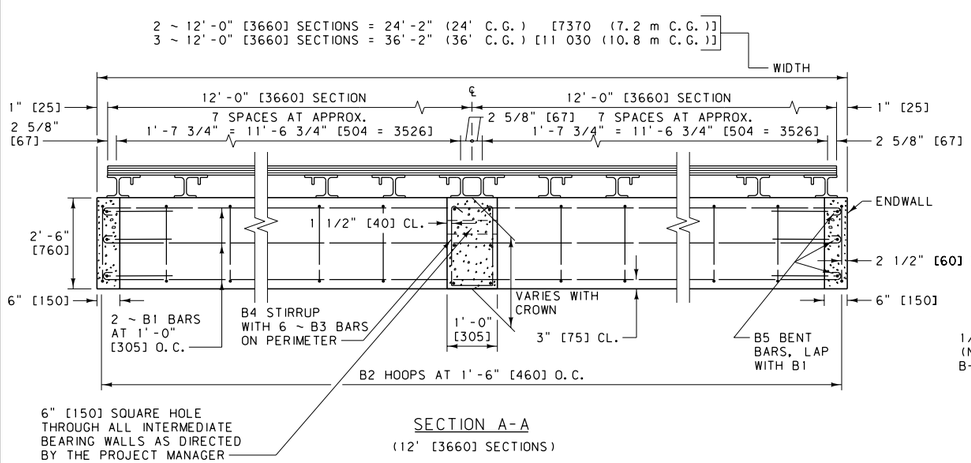

SECTION A-A

(12' [3660] SECTIONS)

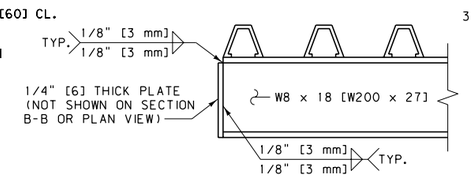

SECTION D

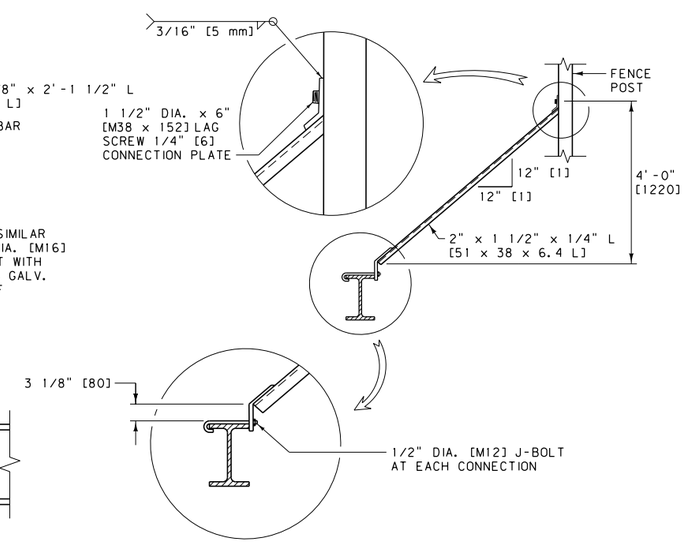

STEEL WING CONNECTION DETAILS

NOTES:

1. THE CONTRACTOR HAS THE OPTION OF USING PRECAST CONCRETE BASES FOR CATTLE GUARDS. SEE DTL. DWG. NO. 611-15.
2. FOR CATTLE GUARDS ON FIELD OR PRIVATE APPROACHES, THE PRECAST CONCRETE BASES IN DTL. DWG. NO. 611-10 MAY BE USED.
3. USE AN EVEN NUMBER OF STEEL CATTLE GUARD GRATES WHEN A CROWNED INSTALLATION IS REQUIRED.
4. SEE DTL. DWG. NO. 611-05 FOR CAST-IN-PLACE CATTLE GUARD REBAR DETAILS.
5. ANCHOR BOLTS ARE TO CONFORM TO AASHTO M 314 [314M] GRADE 36 [250 MPa].
6. ALL NUTS, BOLTS, AND WASHERS ARE TO BE GALVANIZED.

UNITS SHOWN IN BRACKETS [] ARE METRIC AND ARE IN MILLIMETERS (mm) UNLESS OTHER UNITS ARE SHOWN.

DETAILED DRAWING	
REFERENCE STANDARD SPEC. SECTION 611	DWG. NO. 611-00
HEAVY DUTY CATTLE GUARD CAST-IN-PLACE	
EFFECTIVE: SEPTEMBER 2014	

MDT MONTANA DEPARTMENT OF TRANSPORTATION

BILL OF REINFORCING STEEL

BENT BARS (ALL DIMENSIONS ARE OUT TO OUT)

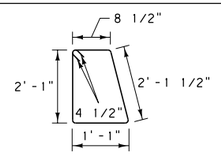

TYPE 1

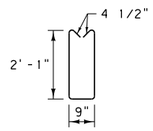

TYPE 2

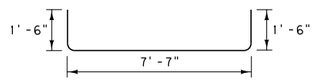

TYPE 3

16 FT. C.G.					30 FT. C.G.				
MARK	SIZE	NO.	TYPE	LENGTH	MARK	SIZE	NO.	TYPE	LENGTH
B1	#4	12	STR.	16'-9"	B1	#4	12	STR.	30'-9"
B2	#4	22	1	6'-9"	B2	#4	42	1	6'-9"
B3	#4	6	STR.	7'-7"	B3	#4	12	STR.	7'-7"
B4	#4	4	2	5'-8"	B4	#4	8	2	5'-8"
B5	#4	6	3	10'-7"	B5	#4	6	3	10'-7"
ESTIMATED WT. = 321 LB.					ESTIMATED WT. = 569 LB.				

20 FT. C.G.					32 FT. C.G.				
B1	#4	12	STR.	20'-9"	B1	#4	12	STR.	32'-9"
B2	#4	28	1	6'-9"	B2	#4	44	1	6'-9"
B3	#4	6	STR.	7'-7"	B3	#4	18	STR.	7'-7"
B4	#4	4	2	5'-8"	B4	#4	12	2	5'-8"
B5	#4	6	3	10'-7"	B5	#4	6	3	10'-7"
ESTIMATED WT. = 381 LB.					ESTIMATED WT. = 640 LB.				

24 FT. C.G.					36 FT. C.G.				
B1	#4	12	STR.	24'-9"	B1	#4	12	STR.	36'-9"
B2	#4	34	1	6'-9"	B2	#4	50	1	6'-9"
B3	#4	6	STR.	7'-7"	B3	#4	12	STR.	7'-7"
B4	#4	4	2	5'-8"	B4	#4	8	2	5'-8"
B5	#4	6	3	10'-7"	B5	#4	6	3	10'-7"
ESTIMATED WT. = 440 LB.					ESTIMATED WT. = 654 LB.				

40 FT. C.G.				
B1	#4	12	STR.	40'-9"
B2	#4	54	1	6'-9"
B3	#4	18	STR.	7'-7"
B4	#4	12	2	5'-8"
B5	#4	6	3	10'-7"
ESTIMATED WT. = 749 LB.				

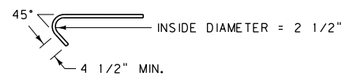

BENT BARS
(TYPES 1 AND 2)

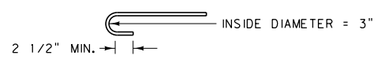

B1 AND B3 STRAIGHT BARS

REBAR DETAILS

NOTES:

1. CONCRETE QUANTITIES WERE FIGURED WITHOUT A CROWN, INCREASE WHEN A CROWNED INSTALLATION IS USED.
2. ALL REINFORCING STEEL IS OF THE DEFORMED TYPE, MEETING THE REQUIREMENTS OF AASHTO M31 (ASTM A615, GRADE 60).
3. SEE DTL. DWG. NO. 611-00 FOR CAST-IN-PLACE CATTLE GUARD DETAILS.

ESTIMATED CLASS GENERAL CONCRETE QUANTITIES
16' C.G. = 4.76 C.Y.
20' C.G. = 5.69 C.Y.
24' C.G. = 6.61 C.Y.
30' C.G. = 8.51 C.Y.
32' C.G. = 9.48 C.Y.
36' C.G. = 9.90 C.Y.
40' C.G. = 11.33 C.Y.

METRIC BILL OF REINFORCING STEEL

BENT BARS (ALL DIMENSIONS ARE OUT TO OUT)

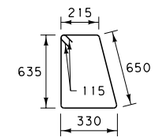

TYPE 1

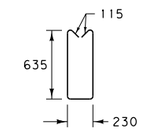

TYPE 2

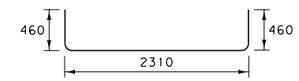

TYPE 3

4.8 m C.G.					9.0 m C.G.				
MARK	SIZE	NO.	TYPE	LENGTH	MARK	SIZE	NO.	TYPE	LENGTH
B1	#13	12	STR.	5105	B1	#13	12	STR.	9375
B2	#13	22	1	2060	B2	#13	42	1	2060
B3	#13	6	STR.	2310	B3	#13	12	STR.	2310
B4	#13	4	2	1730	B4	#13	8	2	1730
B5	#13	6	3	3230	B5	#13	6	3	3230
ESTIMATED WT. = 145.6 kg					ESTIMATED WT. = 258.1 kg				

6.0 m C.G.					9.6 m C.G.				
B1	#13	12	STR.	6325	B1	#13	12	STR.	9980
B2	#13	28	1	2060	B2	#13	44	1	2060
B3	#13	6	STR.	2310	B3	#13	18	STR.	2310
B4	#13	4	2	1730	B4	#13	12	2	1730
B5	#13	6	3	3230	B5	#13	6	3	3230
ESTIMATED WT. = 172.8 kg					ESTIMATED WT. = 290.3 kg				

7.2 m C.G.					10.8 m C.G.				
B1	#13	12	STR.	7545	B1	#13	12	STR.	11200
B2	#13	34	1	2060	B2	#13	50	1	2060
B3	#13	6	STR.	2310	B3	#13	12	STR.	2310
B4	#13	4	2	1730	B4	#13	8	2	1730
B5	#13	6	3	3230	B5	#13	6	3	3230
ESTIMATED WT. = 199.6 kg					ESTIMATED WT. = 296.6 kg				

12.0 m C.G.				
B1	#13	12	STR.	12420
B2	#13	54	1	2060
B3	#13	18	STR.	2310
B4	#13	12	2	1730
B5	#13	6	3	3230
ESTIMATED WT. = 339.7 kg				

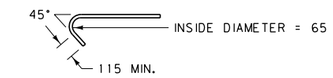

BENT BARS
(TYPES 1 AND 2)

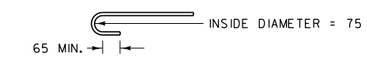

B1 AND B3 STRAIGHT BARS

REBAR DETAILS

NOTES:

1. METRIC CATTLE GUARD SIZES ARE NOMINAL.
2. CONCRETE QUANTITIES WERE FIGURED WITHOUT A CROWN, INCREASE WHEN A CROWNED INSTALLATION IS USED.
3. ALL REINFORCING STEEL IS OF THE DEFORMED TYPE, MEETING THE REQUIREMENTS OF AASHTO M31 (ASTM A615, GRADE 60).
4. SEE DTL. DWG. NO. 611-00 FOR CAST-IN-PLACE CATTLE GUARD DETAILS.

ESTIMATED CLASS GENERAL CONCRETE QUANTITIES
4.8 m C.G. = 3.64 m³
6.0 m C.G. = 4.35 m³
7.2 m C.G. = 5.05 m³
9.0 m C.G. = 6.51 m³
9.6 m C.G. = 7.25 m³
10.8 m C.G. = 7.57 m³
12.0 m C.G. = 8.66 m³

ALL DIMENSIONS ARE MILLIMETERS (mm) UNLESS OTHERWISE NOTED.

DETAILED DRAWING

REFERENCE STANDARD SPEC. SECTION 611

DWG. NO. 611-05

CAST-IN-PLACE CATTLE GUARD REBAR DETAILS

EFFECTIVE: SEPTEMBER 2014

MDT MONTANA DEPARTMENT OF TRANSPORTATION

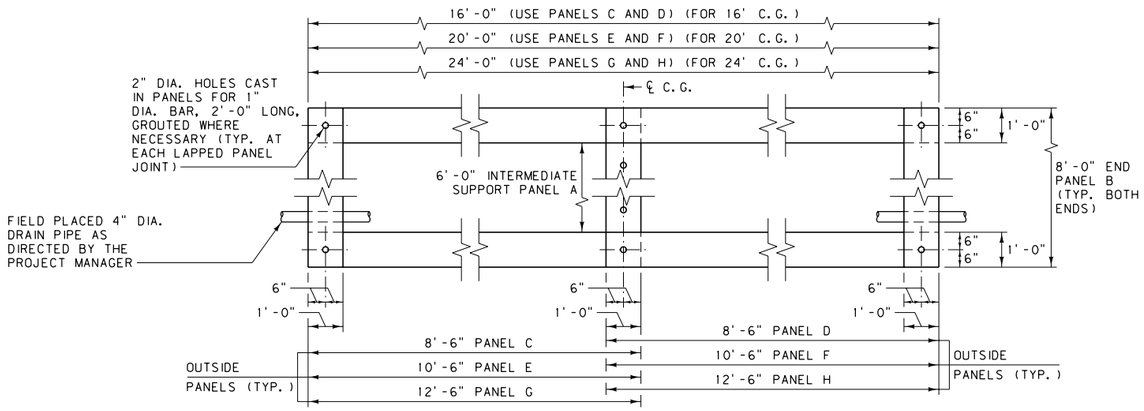

TYPICAL PLAN VIEW

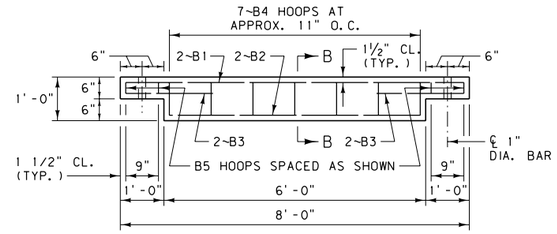

END PANEL B ELEVATION

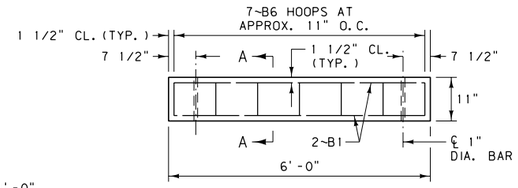

INTERMEDIATE SUPPORT PANEL A ELEVATION

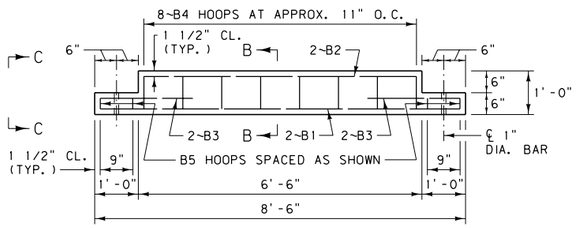

PANEL C ELEVATION

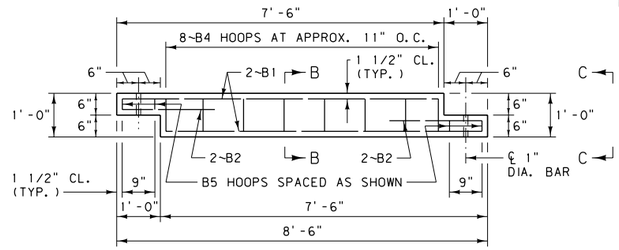

PANEL D ELEVATION

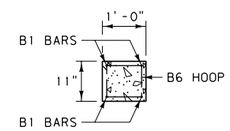

SECTION A-A

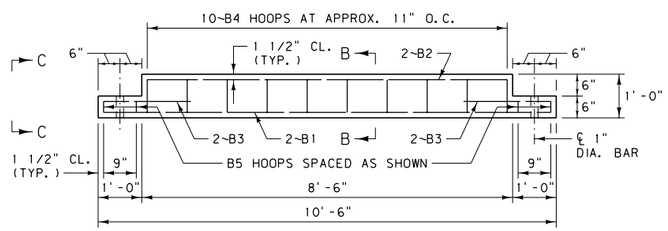

PANEL E ELEVATION

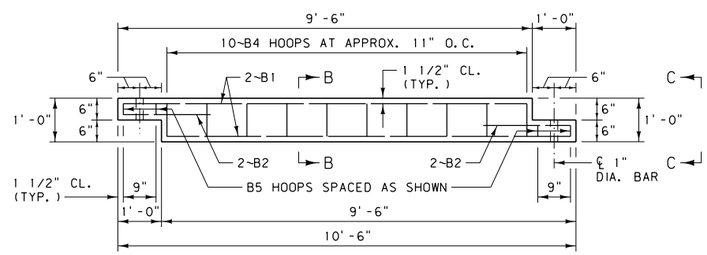

PANEL F ELEVATION

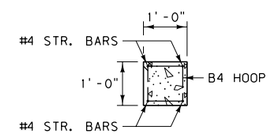

SECTION B-B

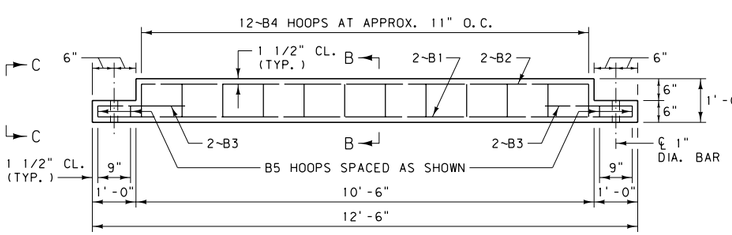

PANEL G ELEVATION

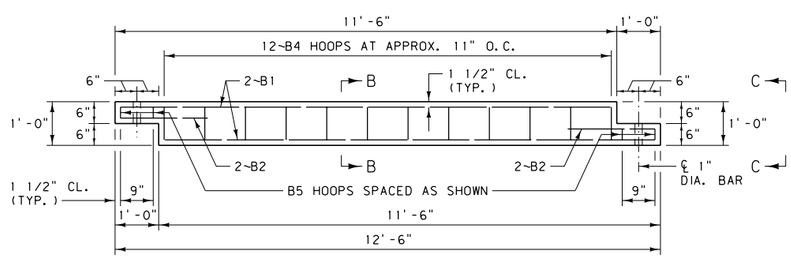

PANEL H ELEVATION

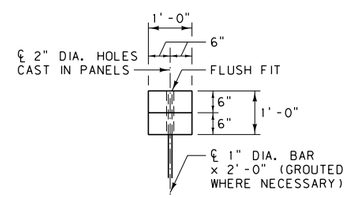

VIEW C-C

(TYP. LAPPED PANEL JOINT)

BILL OF REINFORCING STEEL *

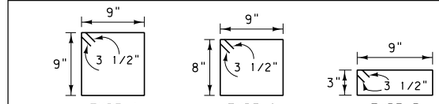

STRAIGHT BARS & BENT BARS (ALL DIMENSIONS OUT TO OUT)

MARK	SIZE	NO.	TYPE	LENGTH
6'-0" SECTION - PANEL A				
B1	#4	4	STRAIGHT	5'-9"
B6	#3	7	2	3'-5"
ESTIMATED WT. = 24 LB.				
8'-0" SECTION - PANEL B				
B1	#4	2	STRAIGHT	7'-9"
B2	#4	2	STRAIGHT	5'-9"
B3	#4	4	STRAIGHT	2'-2"
B4	#3	7	1	3'-7"
B5	#3	4	3	2'-7"
ESTIMATED WT. = 37 LB.				
8'-6" SECTION - PANEL C				
B1	#4	2	STRAIGHT	8'-3"
B2	#4	2	STRAIGHT	6'-3"
B3	#4	4	STRAIGHT	2'-2"
B4	#3	8	1	3'-7"
B5	#3	4	3	2'-7"
ESTIMATED WT. = 40 LB.				
8'-6" SECTION - PANEL D				
B1	#4	4	STRAIGHT	7'-3"
B2	#4	4	STRAIGHT	2'-2"
B4	#3	8	1	3'-7"
B5	#3	4	3	2'-7"
ESTIMATED WT. = 40 LB.				
10'-6" SECTION - PANEL E				
B1	#4	2	STRAIGHT	10'-3"
B2	#4	2	STRAIGHT	8'-3"
B3	#4	4	STRAIGHT	2'-2"
B4	#3	10	1	3'-7"
B5	#3	4	3	2'-7"
ESTIMATED WT. = 48 LB.				
10'-6" SECTION - PANEL F				
B1	#4	4	STRAIGHT	9'-3"
B2	#4	4	STRAIGHT	2'-2"
B4	#3	10	1	3'-7"
B5	#3	4	3	2'-7"
ESTIMATED WT. = 48 LB.				
12'-6" SECTION - PANEL G				
B1	#4	2	STRAIGHT	12'-3"
B2	#4	2	STRAIGHT	10'-3"
B3	#4	4	STRAIGHT	2'-2"
B4	#3	12	1	3'-7"
B5	#3	4	3	2'-7"
ESTIMATED WT. = 56 LB.				
12'-6" SECTION - PANEL H				
B1	#4	4	STRAIGHT	11'-3"
B2	#4	4	STRAIGHT	2'-2"
B4	#3	12	1	3'-7"
B5	#3	4	3	2'-7"
ESTIMATED WT. = 56 LB.				

* FOR ONE PANEL ONLY

ESTIMATED CLASS GENERAL CONCRETE QUANTITIES
6'-0" SECTION - PANEL A = 0.20 C.Y.
8'-0" SECTION - PANEL B = 0.26 C.Y.
8'-6" SECTION - PANEL C = 0.28 C.Y.
8'-6" SECTION - PANEL D = 0.28 C.Y.
10'-6" SECTION - PANEL E = 0.35 C.Y.
10'-6" SECTION - PANEL F = 0.35 C.Y.
12'-6" SECTION - PANEL G = 0.43 C.Y.
12'-6" SECTION - PANEL H = 0.43 C.Y.

NOTES:

1. USE ONLY ON FIELD OR PRIVATE APPROACHES.
2. PROVIDE CAST-IN ANCHOR BOLTS AS SHOWN IN DTL. DWG. NO. 611-00 AT THE APPROPRIATE LOCATIONS. CAST-IN LAG PLATES, SIMILAR TO THOSE SHOWN IN DTL. DWG. NO. 611-15, MAY ALSO BE USED.
3. ALL REINFORCING STEEL IS OF THE DEFORMED TYPE, MEETING THE REQUIREMENTS OF AASHTO M31 (ASTM A615, GRADE 60).
4. FOR DETAILS OF STEEL GRATES AND STEEL WINGS SEE DTL. DWG. NO. 611-00.

DETAILED DRAWING

REFERENCE STANDARD SPEC. SECTION 611

DWG. NO. 611-10

LIGHT DUTY CATTLE GUARD - PRECAST

EFFECTIVE: SEPTEMBER 2014

MDT MONTANA DEPARTMENT OF TRANSPORTATION

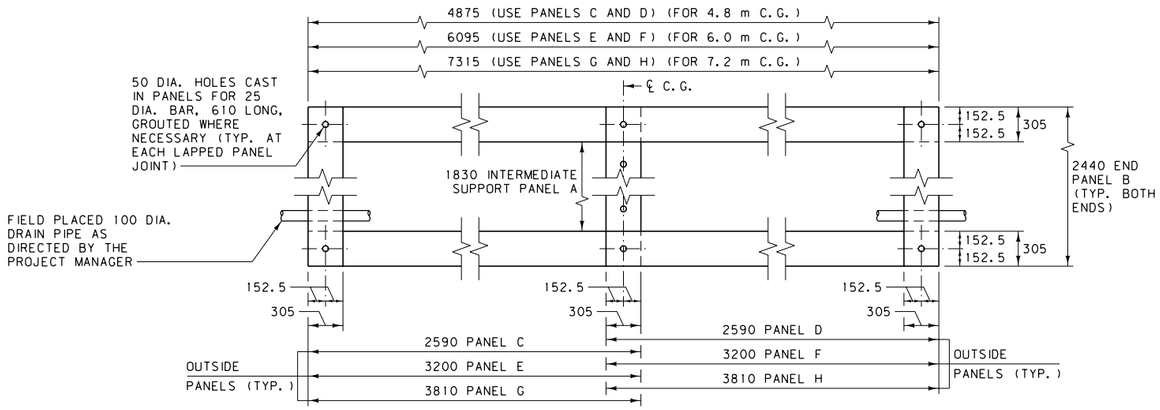

TYPICAL PLAN VIEW

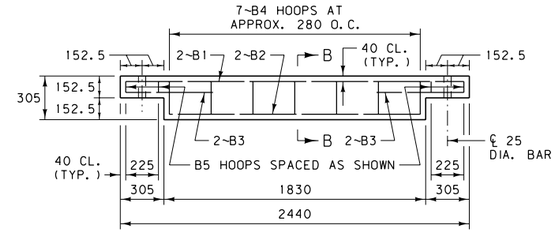

END PANEL B ELEVATION

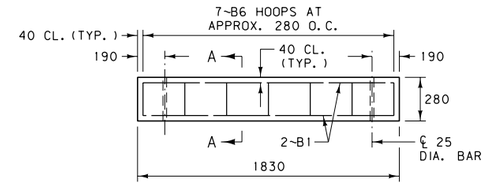

INTERMEDIATE SUPPORT PANEL A ELEVATION

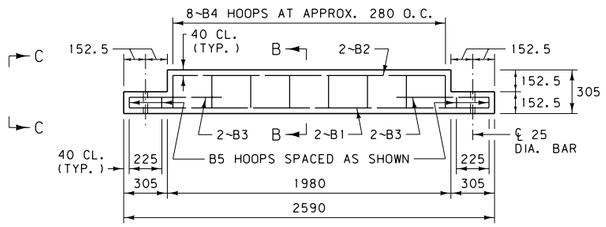

PANEL C ELEVATION

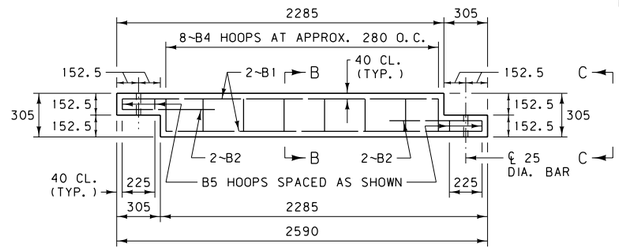

PANEL D ELEVATION

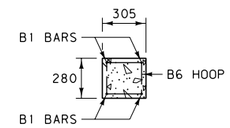

SECTION A-A

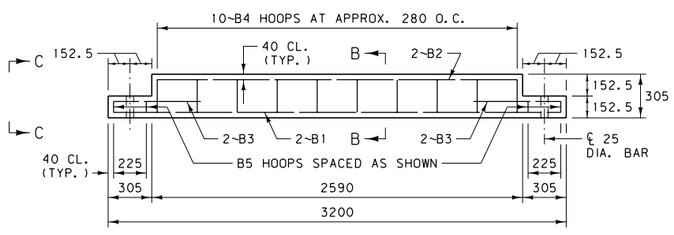

PANEL E ELEVATION

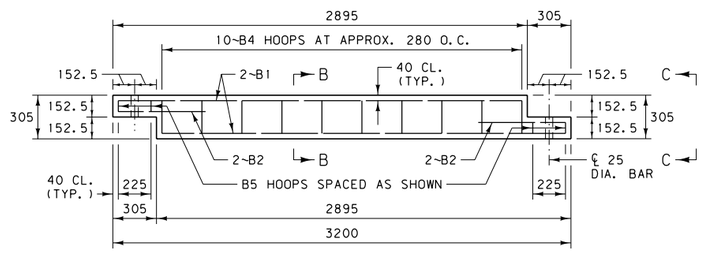

PANEL F ELEVATION

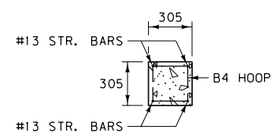

SECTION B-B

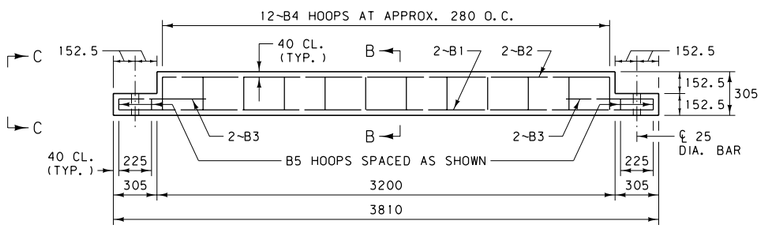

PANEL G ELEVATION

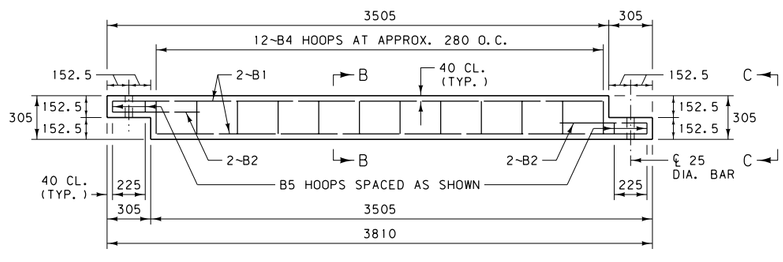

PANEL H ELEVATION

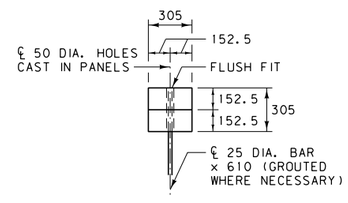

VIEW C-C

(TYP. LAPPED PANEL JOINT)

BILL OF REINFORCING STEEL *				
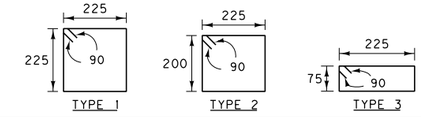				
STRAIGHT BARS & BENT BARS (ALL DIMENSIONS OUT TO OUT)				
MARK	SIZE	NO.	TYPE	LENGTH
1830 SECTION - PANEL A				
B1	#13	4	STRAIGHT	1750
B6	#10	7	2	1030
ESTIMATED WT. = 11 kg				
2440 SECTION - PANEL B				
B1	#13	2	STRAIGHT	2360
B2	#13	2	STRAIGHT	1750
B3	#13	4	STRAIGHT	660
B4	#10	7	1	1080
B5	#10	4	3	780
ESTIMATED WT. = 16.8 kg				
2590 SECTION - PANEL C				
B1	#13	2	STRAIGHT	2510
B2	#13	2	STRAIGHT	1900
B3	#13	4	STRAIGHT	660
B4	#10	8	1	1080
B5	#10	4	3	780
ESTIMATED WT. = 18 kg				
2590 SECTION - PANEL D				
B1	#13	4	STRAIGHT	2205
B2	#13	4	STRAIGHT	660
B4	#10	8	1	1080
B5	#10	4	3	780
ESTIMATED WT. = 18 kg				
3200 SECTION - PANEL E				
B1	#13	2	STRAIGHT	3120
B2	#13	2	STRAIGHT	2510
B3	#13	4	STRAIGHT	660
B4	#10	10	1	1080
B5	#10	4	3	780
ESTIMATED WT. = 21.6 kg				
3200 SECTION - PANEL F				
B1	#13	4	STRAIGHT	2815
B2	#13	4	STRAIGHT	660
B4	#10	10	1	1080
B5	#10	4	3	780
ESTIMATED WT. = 21.6 kg				
3810 SECTION - PANEL G				
B1	#13	2	STRAIGHT	3730
B2	#13	2	STRAIGHT	3120
B3	#13	4	STRAIGHT	660
B4	#10	12	1	1080
B5	#10	4	3	780
ESTIMATED WT. = 25.2 kg				
3810 SECTION - PANEL H				
B1	#13	4	STRAIGHT	3425
B2	#13	4	STRAIGHT	660
B4	#10	12	1	1080
B5	#10	4	3	780
ESTIMATED WT. = 25.2 kg				

* FOR ONE PANEL ONLY

ESTIMATED CLASS GENERAL CONCRETE QUANTITIES
1830 SECTION - PANEL A = 0.16 m³
2440 SECTION - PANEL B = 0.20 m³
2590 SECTION - PANEL C = 0.21 m³
2590 SECTION - PANEL D = 0.21 m³
3200 SECTION - PANEL E = 0.27 m³
3200 SECTION - PANEL F = 0.27 m³
3810 SECTION - PANEL G = 0.33 m³
3810 SECTION - PANEL H = 0.33 m³

ALL DIMENSIONS ARE MILLIMETERS (mm) UNLESS OTHERWISE NOTED.

NOTES:

1. USE ONLY ON FIELD OR PRIVATE APPROACHES.
2. PROVIDE CAST-IN ANCHOR BOLTS AS SHOWN IN DTL. DWG. NO. 611-00 AT THE APPROPRIATE LOCATIONS. CAST-IN LAG PLATES, SIMILAR TO THOSE SHOWN IN DTL. DWG. NO. 611-15, MAY ALSO BE USED.
3. ALL REINFORCING STEEL IS OF THE DEFORMED TYPE, MEETING THE REQUIREMENTS OF AASHTO M31 (ASTM A615, GRADE 60).
4. FOR DETAILS OF STEEL GRATES AND STEEL WINGS SEE DTL. DWG. NO. 611-00.

DETAILED DRAWING

REFERENCE STANDARD SPEC. SECTION 611

DWG. NO. 611-10

LIGHT DUTY CATTLE GUARD - PRECAST (METRIC)

EFFECTIVE: SEPTEMBER 2014

MDT MONTANA DEPARTMENT OF TRANSPORTATION

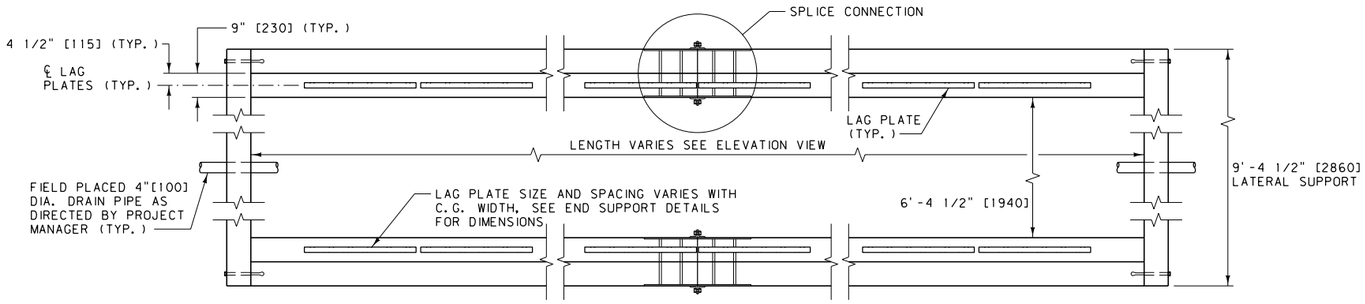

PLAN VIEW

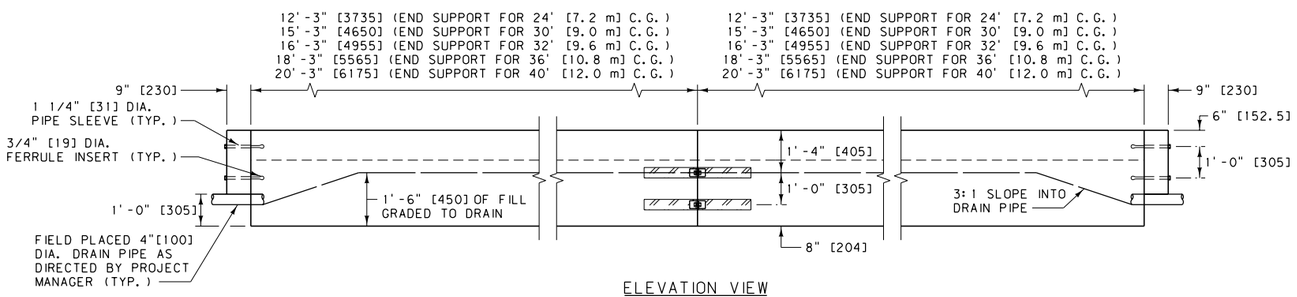

ELEVATION VIEW

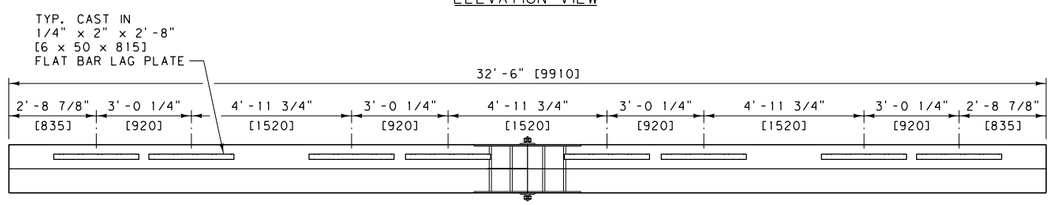

32' [9.6 m]CATTLE GUARD END SUPPORT DETAIL

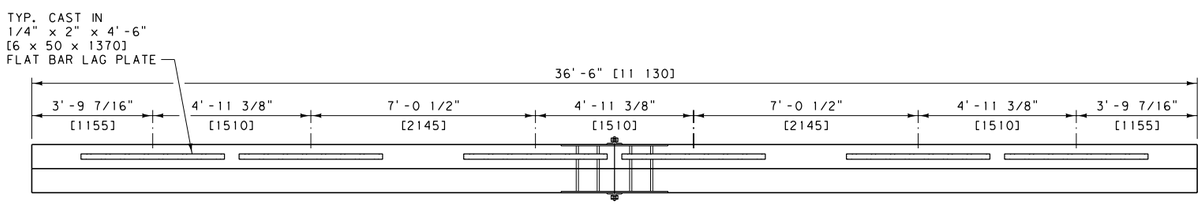

36' [10.8 m]CATTLE GUARD END SUPPORT DETAIL

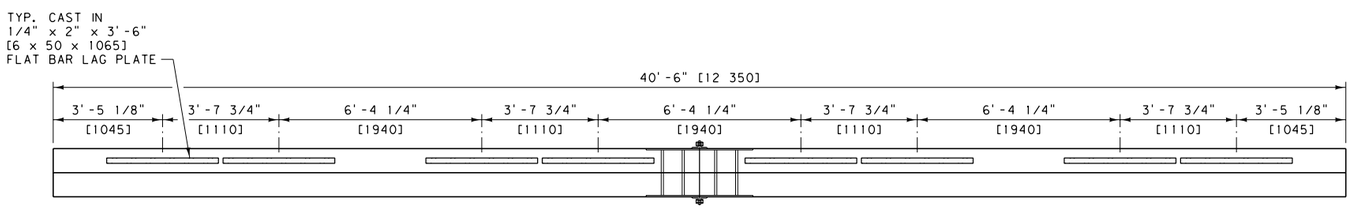

40' [12.0 m]CATTLE GUARD END SUPPORT DETAIL

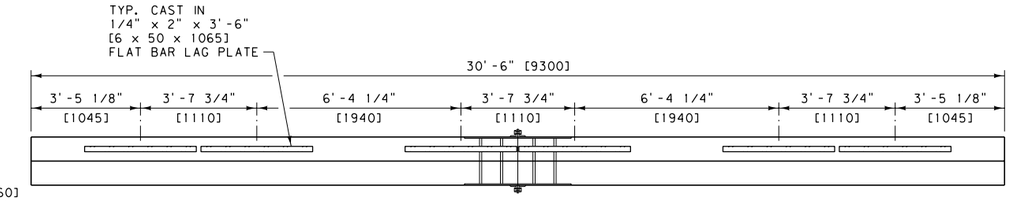

30' [9.0 m]CATTLE GUARD END SUPPORT DETAIL

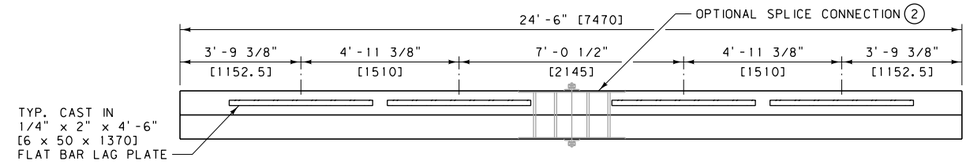

24' [7.2 m]CATTLE GUARD END SUPPORT DETAIL

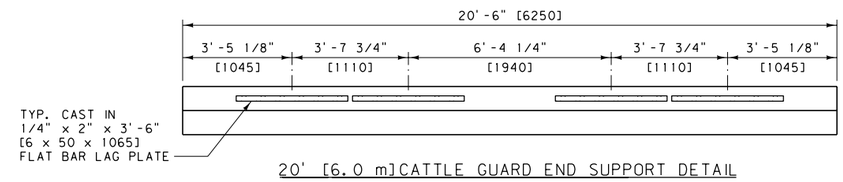

20' [6.0 m]CATTLE GUARD END SUPPORT DETAIL

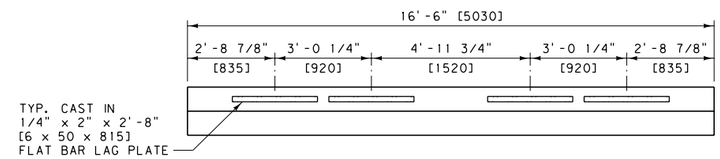

16' [4.8 m]CATTLE GUARD END SUPPORT DETAIL

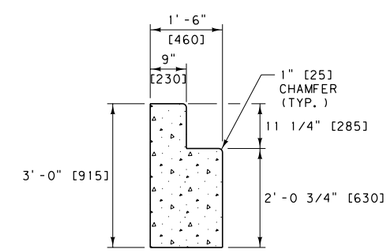

END SUPPORT SECTION VIEW

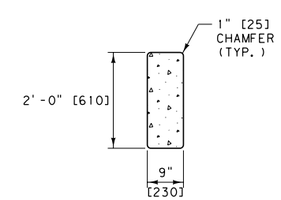

LATERAL SUPPORT SECTION VIEW

NOTES:

1. METRIC CATTLE GUARD SIZES ARE NOMINAL. STANDARD HS20 LIVE LOADING IS REQUIRED FOR HEAVY DUTY CATTLE GUARDS.
2. USE SPLICE CONNECTIONS WHEN A CROWNED INSTALLATION IS REQUIRED.
3. SEE DTL. DWG. NO. 611-20 FOR ADDITIONAL PRE-CAST CONCRETE CATTLE GUARD BASE AND MATERIAL QUANTITY DETAILS.
4. SEE DTL. DWG. NO. 611-00 FOR DETAILS OF STEEL GRATES AND STEEL WINGS.
5. INSTALLATION PROCEDURE:

EXCAVATE 2'-0" [600]BELOW THE ELEVATION OF THE BOTTOM OF THE CATTLE GUARD BASE. EXTEND THE EXCAVATION HORIZONTALLY AT LEAST 1'-0" [300] IN ALL DIRECTIONS BEYOND THE CATTLE GUARD BASE'S EXTERIOR DIMENSION.

FILL THE EXCAVATION TO THE LEVEL OF THE BOTTOM OF THE CATTLE GUARD BASE WITH FILL MATERIAL OF AASHTO GRADE A-1-a OR BETTER, COMPACT TO MEET REQUIREMENTS OF SECTION 203.

AFTER PLACING THE CATTLE GUARD, FILL THE EXTERIOR PORTION OF THE EXCAVATION TO GRADE WITH THE SAME MATERIAL.

FILL THE INTERIOR OF THE CATTLE GUARD BASE TO A DEPTH OF 1'-6" [450] WITH THE SIMILARLY COMPACTED MATERIAL.

UNITS SHOWN IN BRACKETS [] ARE METRIC AND ARE IN MILLIMETERS (mm) UNLESS OTHER UNITS ARE SHOWN.

DETAILED DRAWING	
REFERENCE STANDARD SPEC. SECTION 611	DWG. NO. 611-15
HEAVY DUTY CATTLE GUARD - PRECAST	
EFFECTIVE: SEPTEMBER 2014	

MDT MONTANA DEPARTMENT OF TRANSPORTATION

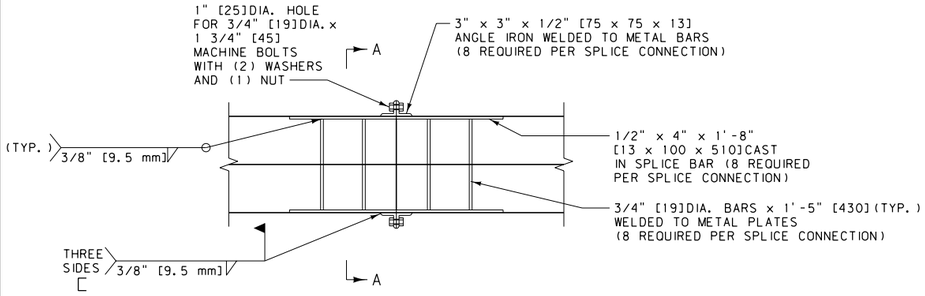

SPLICE CONNECTION DETAIL

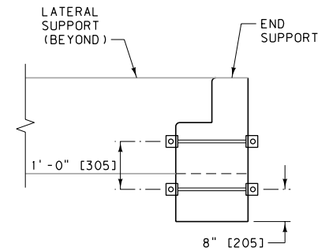

END SUPPORT SECTION A-A

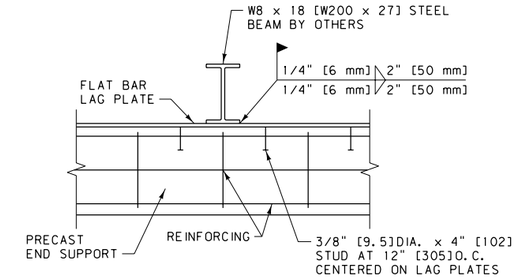

LAG PLATE CONNECTION DETAIL

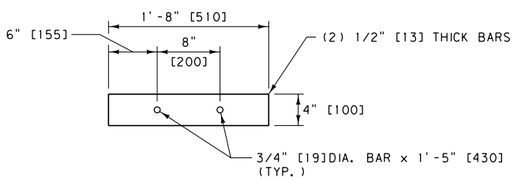

SPLICE BAR DETAIL

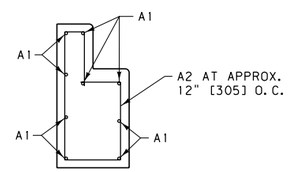

END SUPPORT REBAR DETAIL

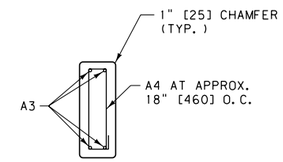

LATERAL SUPPORT REBAR DETAIL

NOTE: ALL REBAR DIMENSIONS ARE OUT TO OUT.

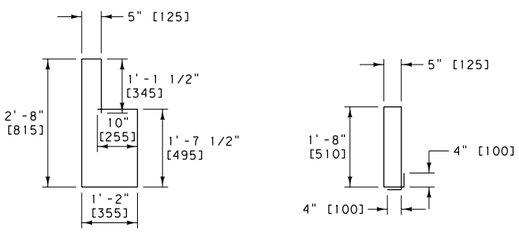

TYPE A2 TYPE A4

REINFORCING STEEL

QUANTITIES AND DIMENSIONS ARE APPROXIMATE ONLY BASED ON ONE COMPLETE CATTLE GUARD.													
NOMINAL C.G. SIZE	REINFORCING STEEL (NO. 4 BARS / GRADE 60)									MISC. STEEL			
	A1		A2		A3		A4		ESTIMATED WT.	LAG PLATES		SPLICE CONNECTION	ESTIMATED WT.
	REQUIRED	LENGTH	REQUIRED	LENGTH	REQUIRED	LENGTH	REQUIRED	LENGTH	LB.	REQUIRED	LENGTH		LB.
16'-0"	18	16'-2"	36	7'-10"	8	9'-1 1/2"	14	4'-10"	477	8	2'-8"	NO	39
20'-0"	18	20'-2"	44	7'-10"	8	9'-1 1/2"	14	4'-10"	567	8	3'-6"	NO	52
24'-0"	18	24'-2"	52	7'-10"	8	9'-1 1/2"	14	4'-10"	657	8	4'-6"	NO	66
✱ 24'-0"	36	11'-11"	52	7'-10"	8	9'-1 1/2"	14	4'-10"	653	8	4'-6"	YES	323
30'-0"	36	14'-11"	64	7'-10"	8	9'-1 1/2"	14	4'-10"	788	12	3'-6"	YES	334
32'-0"	36	15'-11"	68	7'-10"	8	9'-1 1/2"	14	4'-10"	833	16	2'-8"	YES	335
36'-0"	36	17'-11"	76	7'-10"	8	9'-1 1/2"	14	4'-10"	923	12	4'-6"	YES	356
40'-0"	36	19'-11"	84	7'-10"	8	9'-1 1/2"	14	4'-10"	1013	16	3'-6"	YES	360

✱ 24'-0" CATTLE GUARD WITH OPTIONAL SPLICE

ESTIMATED CLASS GENERAL CONCRETE QUANTITIES
16'-0" C.G. = 5.68 C.Y.
20'-0" C.G. = 6.81 C.Y.
24'-0" C.G. = 7.93 C.Y.
✱ 24'-0" C.G. = 7.93 C.Y.
30'-0" C.G. = 9.62 C.Y.
32'-0" C.G. = 10.18 C.Y.
36'-0" C.G. = 11.31 C.Y.
40'-0" C.G. = 12.43 C.Y.

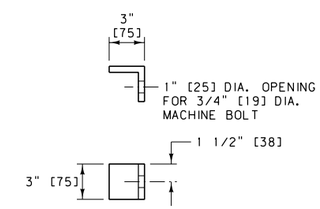

ANGLE IRON DETAIL

QUANTITIES AND DIMENSIONS ARE APPROXIMATE ONLY BASED ON ONE COMPLETE CATTLE GUARD.													
NOMINAL C.G. SIZE	REINFORCING STEEL (NO. 13 BARS / GRADE 420)									MISC. STEEL			
	A1		A2		A3		A4		ESTIMATED WT.	LAG PLATES		SPLICE CONNECTION	ESTIMATED WT.
	REQUIRED	LENGTH	REQUIRED	LENGTH	REQUIRED	LENGTH	REQUIRED	LENGTH	kg.	REQUIRED	LENGTH		kg.
4.8 m	18	4930 mm	36	2390 mm	8	2780 mm	14	1470 mm	216.3	8	815 mm	NO	16.7
6.0 m	18	6150 mm	44	2390 mm	8	2780 mm	14	1470 mm	257.1	8	1065 mm	NO	21.4
7.2 m	18	7370 mm	52	2390 mm	8	2780 mm	14	1470 mm	298.0	8	1370 mm	NO	27.1
✱ 7.2 m	36	3635 mm	52	2390 mm	8	2780 mm	14	1470 mm	296.2	8	1370 mm	YES	144.2
9.0 m	36	4550 mm	64	2390 mm	8	2780 mm	14	1470 mm	357.4	12	1065 mm	YES	149.1
9.6 m	36	4855 mm	68	2390 mm	8	2780 mm	14	1470 mm	377.8	16	815 mm	YES	150.4
10.8 m	36	5465 mm	76	2390 mm	8	2780 mm	14	1470 mm	418.7	12	1370 mm	YES	157.8
12.0 m	36	6075 mm	84	2390 mm	8	2780 mm	14	1470 mm	459.5	16	1065 mm	YES	159.8

✱ 7.2 m CATTLE GUARD WITH OPTIONAL SPLICE

ESTIMATED CLASS GENERAL CONCRETE QUANTITIES (METRIC)
4.8 m C.G. = 3.72 m³
6.0 m C.G. = 4.43 m³
7.2 m C.G. = 5.13 m³
✱ 7.2 m C.G. = 5.13 m³
9.0 m C.G. = 6.19 m³
9.6 m C.G. = 6.55 m³
10.8 m C.G. = 7.25 m³
12.0 m C.G. = 7.96 m³

NOTES:

1. C.G. = CATTLE GUARD.
2. ALL HARDWARE IS TO BE PRIMER PAINTED.
3. ALL STEEL HARDWARE IS TO CONFORM TO AASHTO M270 [270M]GRADE 36 [250].
4. ALL NUTS, BOLTS, AND WASHERS ARE TO CONFORM TO ASTM A307 [307M]AND BE GALVANIZED PER AASHTO M232 [M232M].
5. SEE DTL. DWG. NO 611-15 FOR PRECAST CONCRETE CATTLE GUARD BASE

UNITS SHOWN IN BRACKETS [] ARE METRIC AND ARE IN MILLIMETERS (mm) UNLESS OTHER UNITS ARE SHOWN.

DETAILED DRAWING

REFERENCE STANDARD SPEC. SECTION 611

DWG. NO. 611-20

PRECAST CONCRETE CATTLE GUARD BASE DETAILS

EFFECTIVE: SEPTEMBER 2014

MDT MONTANA DEPARTMENT OF TRANSPORTATION

ROUND PIPE

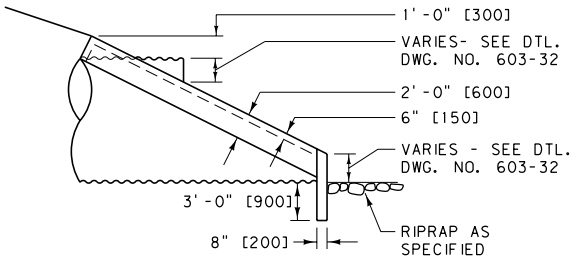

SIDE ELEVATION

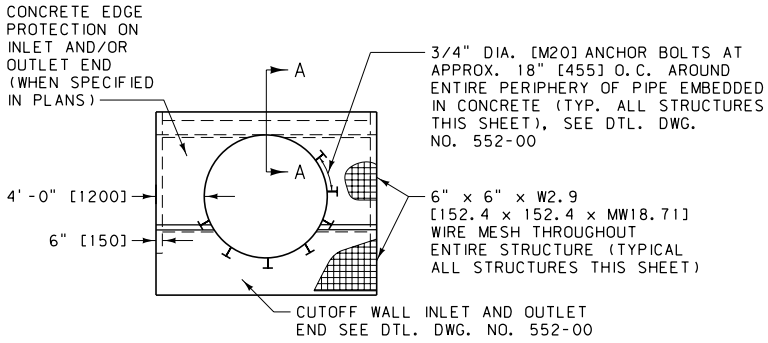

FRONT ELEVATION

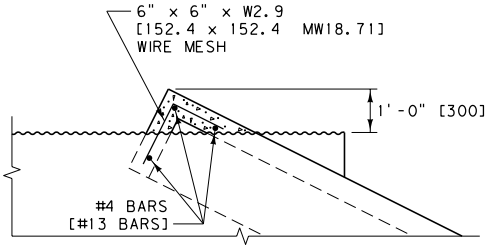

SECTION A-A

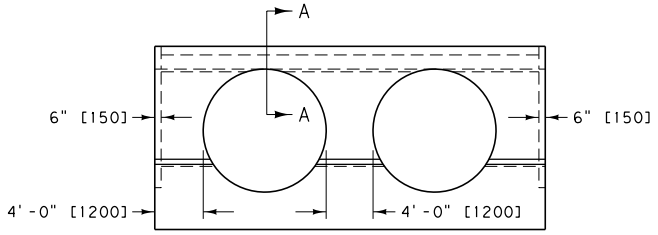

FRONT ELEVATION MULTIPLE PIPES

ARCH PIPE

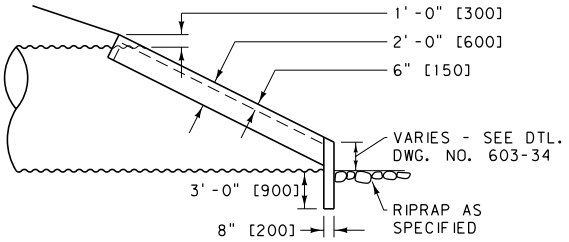

SIDE ELEVATION

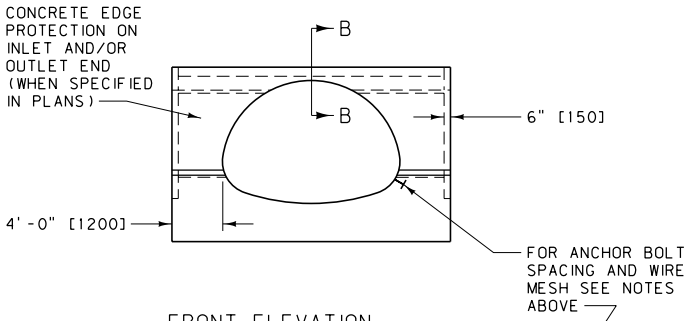

FRONT ELEVATION

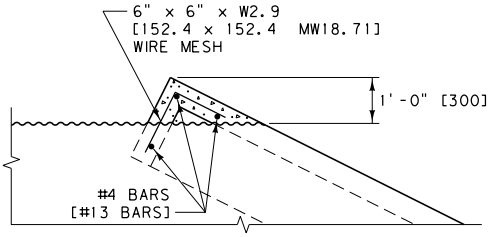

SECTION B-B

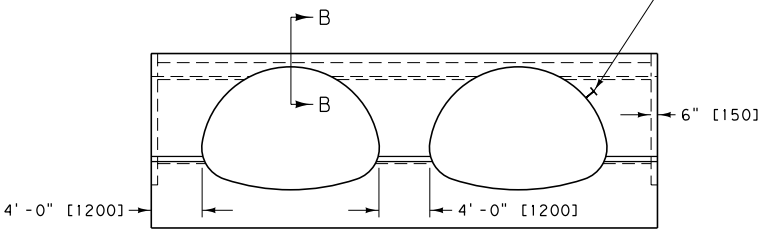

FRONT ELEVATION MULTIPLE PIPES

NOTE:
ALL CONCRETE IS CLASS GENERAL OR EQUAL.

UNITS SHOWN IN BRACKETS [] ARE METRIC AND ARE IN MILLIMETERS (mm) UNLESS OTHER UNITS ARE SHOWN.

DETAILED DRAWING	
REFERENCE STANDARD SPEC. SECTION 613, 603, 552	DWG. NO. 613-06
CONCRETE EDGE PROTECTION FOR METAL CULVERTS	
EFFECTIVE: SEPTEMBER 2014	
MDT MONTANA DEPARTMENT OF TRANSPORTATION	

ROUND PIPE

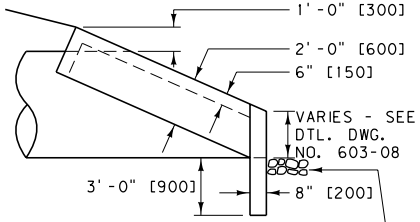

SIDE ELEVATION

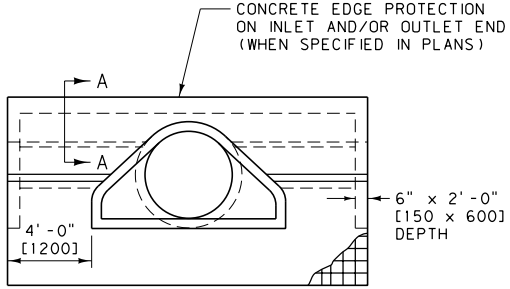

FRONT ELEVATION

ARCH PIPE

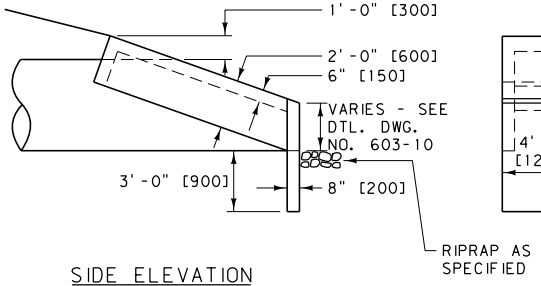

SIDE ELEVATION

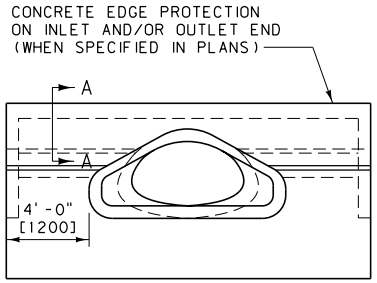

FRONT ELEVATION

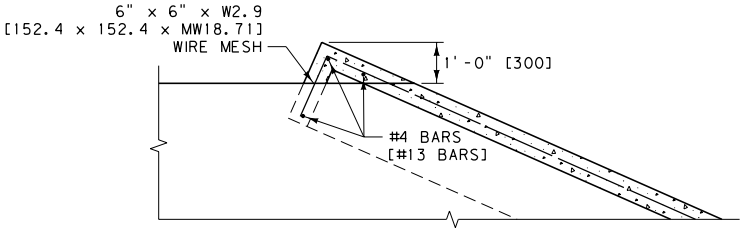

SECTION A-A

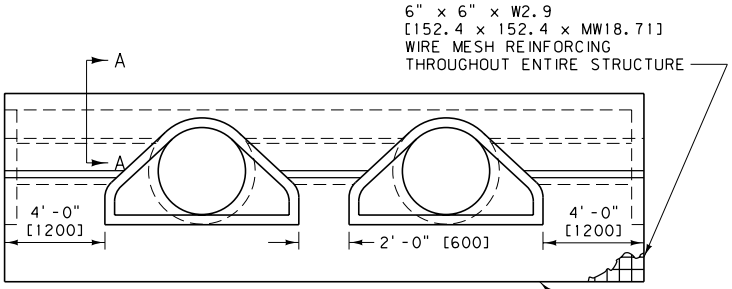

FRONT ELEVATION MULTIPLE PIPES

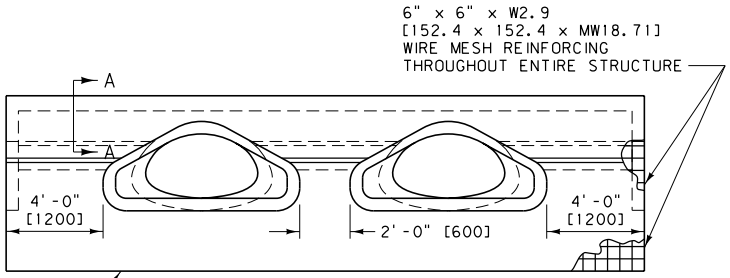

FRONT ELEVATION MULTIPLE PIPES

CUTOFF WALL INLET AND OUTLET END SEE DTL. DWG. NO. 552-00 (WHEN SPECIFIED IN PLANS)

NOTE:
ALL CONCRETE IS CLASS GENERAL CONCRETE OR EQUAL.

UNITS SHOWN IN BRACKETS [] ARE METRIC AND ARE IN MILLIMETERS (mm) UNLESS OTHER UNITS ARE SHOWN.

DETAILED DRAWING	
REFERENCE STANDARD SPEC. SECTION 613, 603, 552	DWG. NO. 613-08
CONCRETE EDGE PROTECTION FOR CONCRETE CULVERTS	
EFFECTIVE: SEPTEMBER 2014	

MDT MONTANA DEPARTMENT OF TRANSPORTATION

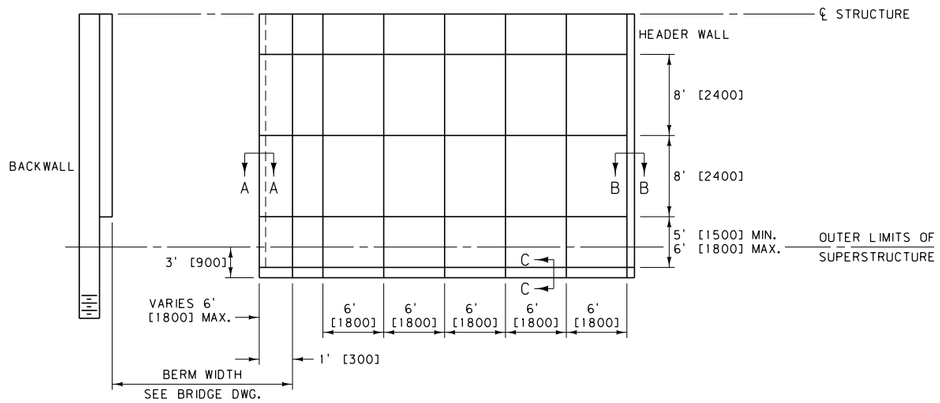

STRAIGHT STRUCTURE

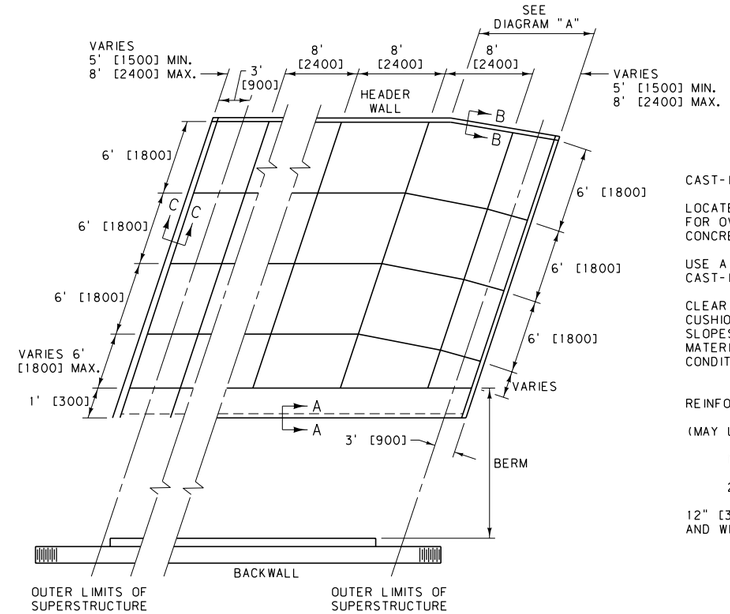

SKEWED STRUCTURE

CAST-IN-PLACE CONCRETE:

LOCATE JOINTS AS INDICATED ON THE PLANS. IF CONSTRUCTION IS STOPPED FOR OVER TWO HOURS, CREATE A CONSTRUCTION JOINT. USE CLASS GENERAL CONCRETE FOR ALL CAST-IN-PLACE CONCRETE.

USE A 1/2" [13]EXPANSION JOINT FILLER PER SECTION 707 WHENEVER THE CAST-IN-PLACE CONCRETE ABUTS AGAINST ANY PART OF THE BRIDGE STRUCTURE.

CLEAR THE EMBANKMENT SLOPE OF ALL BRUSH, DEBRIS AND RUBBLE. A CUSHION IS NOT REQUIRED FOR GRAVEL EMBANKMENT SLOPES. FINISH ALL SLOPES TO THE SLOPE INDICATED IN THE BRIDGE PLANS. COMPACT ALL LOOSE MATERIAL. LEAVE THE ADJACENT SLOPE AREA IN A SMOOTH, UNIFORM CONDITION.

REINFORCING STEEL:

(MAY USE EITHER ALTERNATE LISTED BELOW)

1. #3 [#10]BARS AT 10" [250]O.C. (HORIZONTAL AND VERTICAL SPACING) MIN. COVER OF 2" [50]
2. 6" x 6" x W2.9 [152.4 x 152.4 MW187.1]WIRE MESH

12" [300]OVERLAP REQUIRED AT CONSTRUCTION JOINTS FOR REINFORCING STEEL AND WIRE MESH.

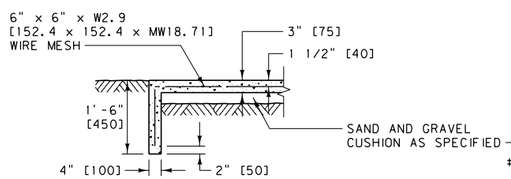

SECTION A-A

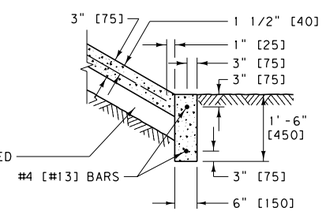

SECTION B-B

HEADER WALL

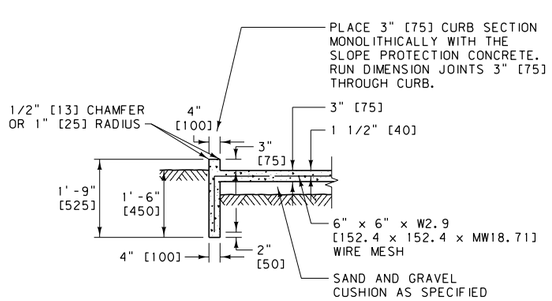

SECTION C-C

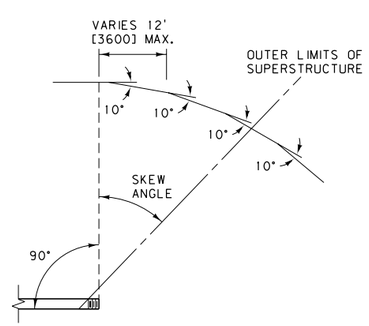

DIAGRAM "A"

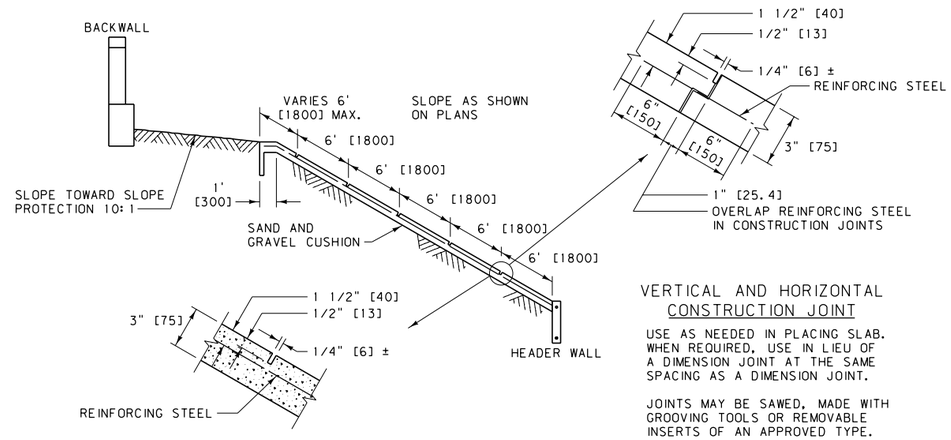

VERTICAL AND HORIZONTAL
CONSTRUCTION JOINT

USE AS NEEDED IN PLACING SLAB. WHEN REQUIRED, USE IN LIEU OF A DIMENSION JOINT AT THE SAME SPACING AS A DIMENSION JOINT.

JOINTS MAY BE SAWED, MADE WITH GROOVING TOOLS OR REMOVABLE INSERTS OF AN APPROVED TYPE.

IF JOINTS ARE TO BE SAWED, SAW JOINTS JUST AFTER CONCRETE HAS SET BUT BEFORE UNCONTROLLED CRACKING OCCURS.

VERTICAL AND HORIZONTAL
DIMENSION JOINT

6' [1800] VERTICAL SPACING OR AS NOTED.
8' [2400] HORIZONTAL SPACING OR AS NOTED.
JOINTS MAY BE SAWED, MADE WITH GROOVING TOOLS OR REMOVABLE INSERTS OF AN APPROVED TYPE.

UNITS SHOWN IN BRACKETS [] ARE METRIC AND ARE IN MILLIMETERS (mm) UNLESS OTHER UNITS ARE SHOWN.

DETAILED DRAWING	
REFERENCE STANDARD SPEC. SECTION 613, 707	DWG. NO. 613-10
CONCRETE SLOPE PROTECTION	
EFFECTIVE: SEPTEMBER 2014	

MDT MONTANA DEPARTMENT OF TRANSPORTATION

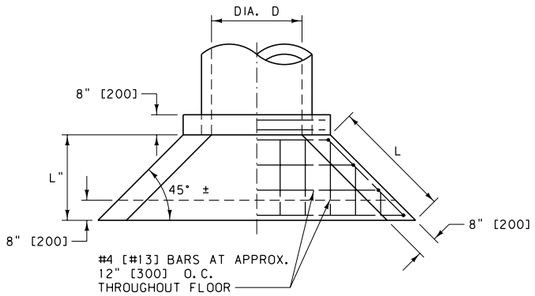

PLAN

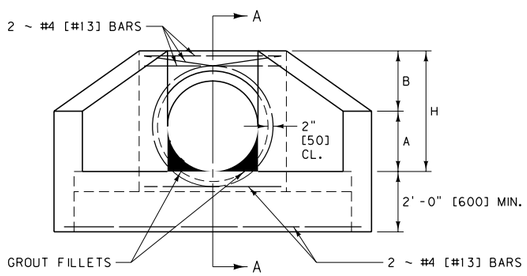

ELEVATION

INLET HEADWALL

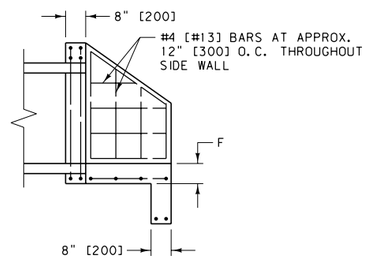

SECTION A-A

CHAMFER ALL EXPOSED CORNERS 1" [25]. REINFORCING STEEL TO BE NOT LESS THAN 1 1/2" [40] TO NEAREST FACE OF CONCRETE.

INLET AND OUTLET HEADWALLS FOR CMP												
CULVERT		CL. GENERAL CONC. OR EQUAL (C.Y.)		* REBAR #4 (LB.)		DIMENSION TABLE						
DIA. D	AREA (SQ. FT.)	INLET	OUTLET	INLET	OUTLET	A	B	H	L	L"	F	L'
18"	1.77	0.73	0.59	70	60	1'-3"	1'-3"	2'-6"	2'-6"	1'-9"	6"	2'-2"
24"	3.14	0.91	0.76	83	73	1'-6"	1'-6"	3'-0"	3'-0"	2'-1"	6"	2'-6"
30"	4.91	1.06	0.95	109	93	1'-9"	1'-9"	3'-6"	3'-6"	2'-6"	6"	2'-10"
36"	7.07	1.68	1.11	127	108	2'-0"	2'-0"	4'-0"	4'-0"	2'-10"	6"	3'-2"
42"	9.62	2.10	1.40	153	125	2'-3"	2'-3"	4'-6"	4'-6"	3'-2"	6"	3'-6"
48"	12.57	2.32	1.66	178	149	2'-6"	2'-6"	5'-0"	5'-0"	3'-6"	6"	3'-10"

* FOR INFORMATION PURPOSES ONLY INLCUDE IN THE COST OF CLASS DD CONCRETE

METRIC INLET AND OUTLET HEADWALLS FOR CMP												
CULVERT		CL. GENERAL CONC. OR EQUAL (m^3)		* REBAR #13 (kg)		METRIC DIMENSION TABLE (mm)						
DIA. D (mm)	AREA (m^2)	INLET	OUTLET	INLET	OUTLET	A	B	H	L	L"	F	L'
450	0.159	0.6	0.5	32	27	400	400	800	750	550	150	650
600	0.283	0.8	0.6	38	33	450	450	900	900	650	150	750
750	0.442	1.1	0.8	50	42	550	550	1100	1050	750	150	850
900	0.636	1.3	0.9	57	49	600	600	1200	1200	850	150	950
1050	0.866	1.6	1.1	69	57	700	700	1400	1350	950	150	1050
1200	1.131	1.8	1.3	81	68	750	750	1500	1500	1050	150	1150

* FOR INFORMATION PURPOSES ONLY INLCUDE IN THE COST OF CLASS DD CONCRETE

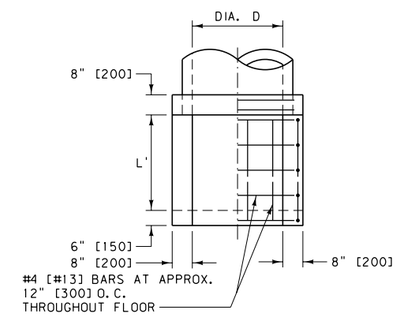

PLAN

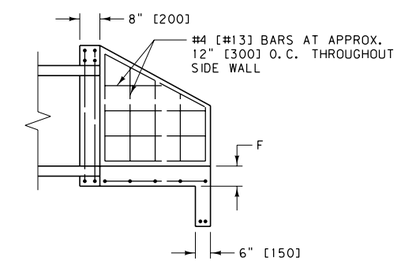

SECTION B-B

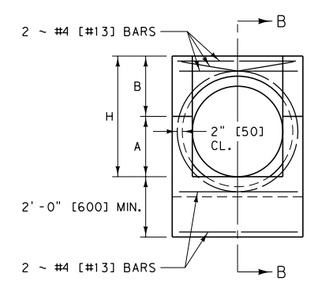

ELEVATION

OUTLET HEADWALL

INLET AND OUTLET HEADWALLS FOR RCP												
CULVERT		CL. GENERAL CONC. OR EQUAL (C.Y.)		* REBAR #4 (LB.)		DIMENSION TABLE						
DIA. D	AREA (SQ. FT.)	INLET	OUTLET	INLET	OUTLET	A	B	H	L	L"	F	L'
18"	1.77	0.80	0.60	71	61	1'-3"	1'-3"	2'-6"	2'-6"	1'-9"	6 1/2"	2'-2"
24"	3.14	1.00	0.86	85	75	1'-6"	1'-6"	3'-0"	3'-0"	2'-1"	7"	2'-6"
30"	4.91	1.42	1.14	112	95	1'-9"	1'-9"	3'-6"	3'-6"	2'-6"	7 1/2"	2'-10"
36"	7.07	1.84	1.43	129	111	2'-0"	2'-0"	4'-0"	4'-0"	2'-10"	8"	3'-2"
42"	9.62	2.12	1.73	156	128	2'-3"	2'-3"	4'-6"	4'-6"	3'-2"	8 1/2"	3'-6"
48"	12.57	2.34	2.07	182	152	2'-6"	2'-6"	5'-0"	5'-0"	3'-6"	9"	3'-10"

* FOR INFORMATION PURPOSES ONLY INLCUDE IN THE COST OF CLASS DD CONCRETE

METRIC INLET AND OUTLET HEADWALLS FOR RCP												
CULVERT		CL. GENERAL CONC. OR EQUAL (m^3)		* REBAR #13 (kg)		METRIC DIMENSION TABLE (mm)						
DIA. D (mm)	AREA (m^2)	INLET	OUTLET	INLET	OUTLET	A	B	H	L	L"	F	L'
450	0.164	0.7	0.5	32	28	400	400	800	750	550	200	650
600	0.292	0.8	0.6	38	34	450	450	900	900	650	200	750
750	0.456	1.1	0.8	51	43	550	550	1100	1050	750	200	850
900	0.657	1.4	1.0	59	50	600	600	1200	1200	850	250	950
1050	0.894	1.7	1.2	71	58	700	700	1400	1350	950	250	1050
1200	1.167	2.0	1.4	82	69	750	750	1500	1500	1050	250	1150

* FOR INFORMATION PURPOSES ONLY INLCUDE IN THE COST OF CLASS DD CONCRETE

UNITS SHOWN IN BRACKETS [] ARE METRIC AND ARE IN MILLIMETERS (mm) UNLESS OTHER UNITS ARE SHOWN.

DETAILED DRAWING

REFERENCE
STANDARD SPEC.
SECTION 613

DWG. NO.
613-12

INLET AND OUTLET HEADWALLS FOR RCP AND CMP PIPES

EFFECTIVE: SEPTEMBER 2014

MDT MONTANA DEPARTMENT OF TRANSPORTATION

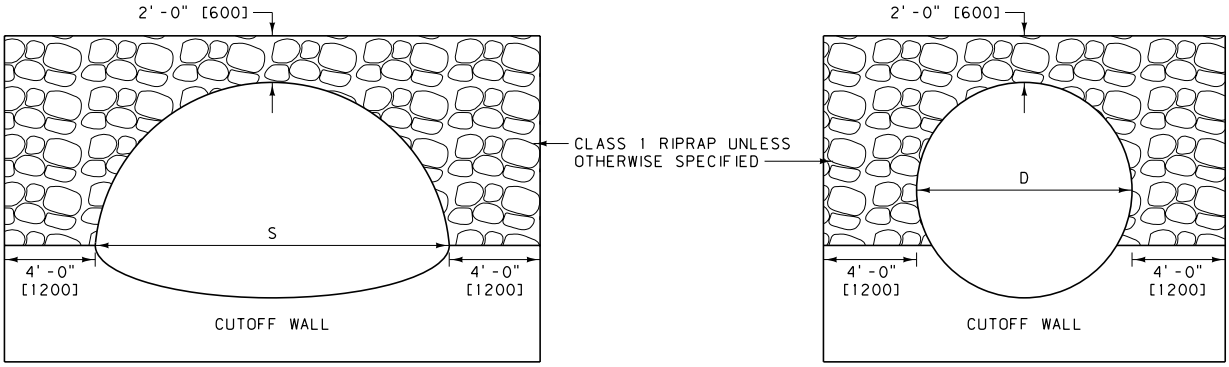

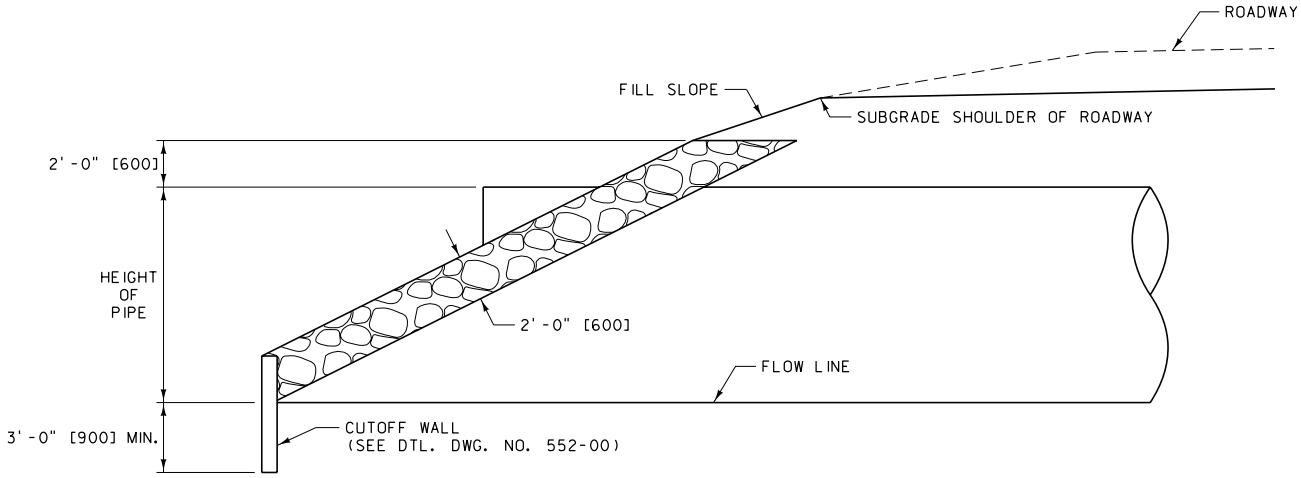

NOTES:

KEY ENDS OF RIPRAP WALLS INTO THE EMBANKMENT SLOPES A MINIMUM OF 2 FEET [600 mm]FROM OUTER FACE OF THE RIPRAP FOR THE FULL HEIGHT OF THE RIPRAP WALL.

UNITS SHOWN IN BRACKETS [] ARE METRIC AND ARE IN MILLIMETERS (mm) UNLESS OTHER UNITS ARE SHOWN.

DETAILED DRAWING	
REFERENCE STANDARD SPEC. SECTION 613	DWG. NO. 613-14
CULVERT RIPRAP	
EFFECTIVE: SEPTEMBER 2014	
MDT MONTANA DEPARTMENT OF TRANSPORTATION	

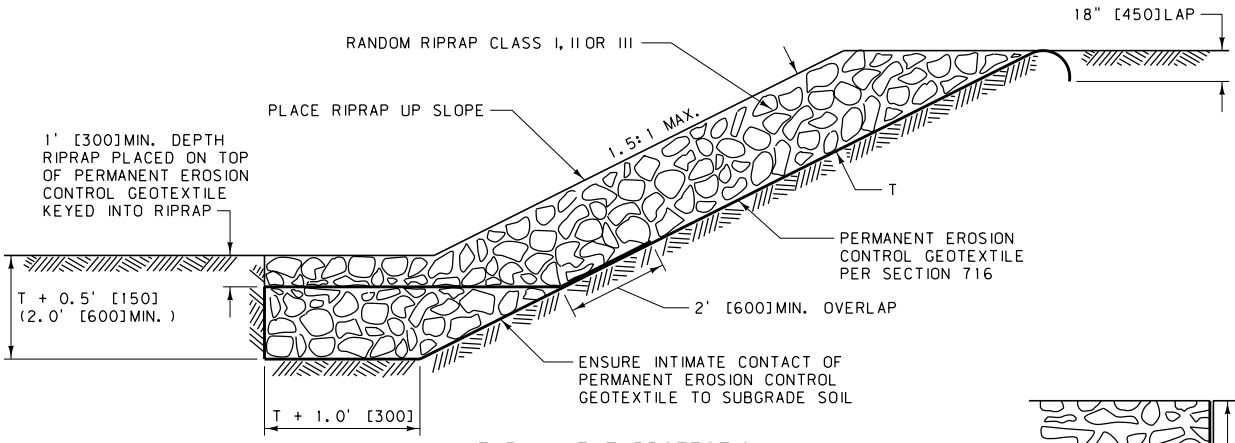

EMBANKMENT PROTECTION

MINIMUM T FOR:
CLASS I RIPRAP = 1.5' [450]
CLASS II RIPRAP = 2.5' [750]
CLASS III RIPRAP = 3.0' [900]

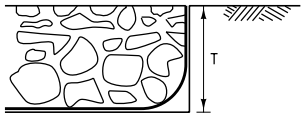

SECTION A-A

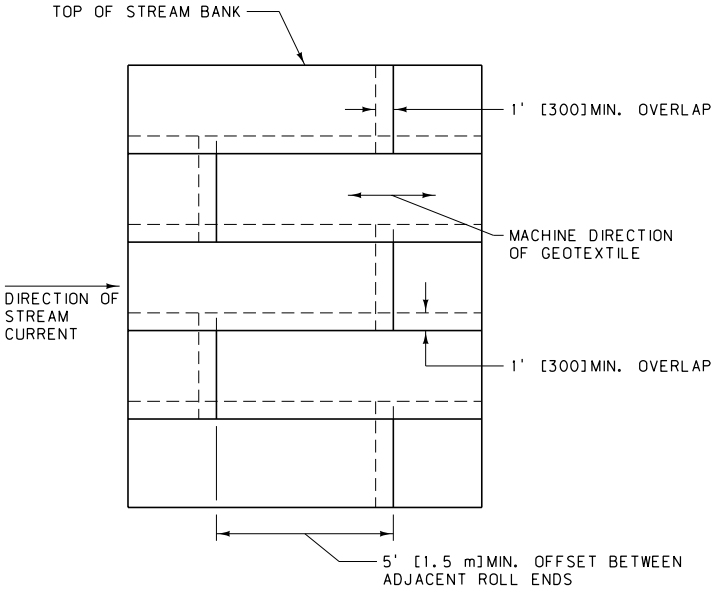

GEOTEXTILE PLACEMENT DETAIL

METHOD FOR PLACING PERMANENT EROSION CONTROL GEOTEXTILE FOR PROTECTION OF STREAM BANKS

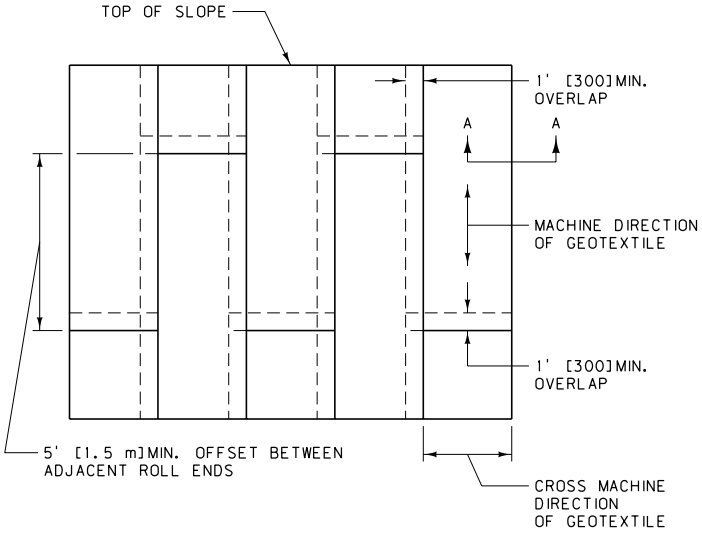

GEOTEXTILE PLACEMENT DETAIL

METHOD FOR PLACING PERMANENT EROSION CONTROL GEOTEXTILE FOR PROTECTION OF CUT AND FILL SLOPES

NOTES:

1. INSTALL PERMANENT EROSION CONTROL GEOTEXTILE PER SECTION 622.

UNITS SHOWN IN BRACKETS [] ARE METRIC AND ARE IN MILLIMETERS (mm) UNLESS OTHER UNITS ARE SHOWN.

DETAILED DRAWING	
REFERENCE STANDARD SPEC. SECTION 613, 622	DWG. NO. 613-16
EMBANKMENT PROTECTION	
EFFECTIVE: SEPTEMBER 2014	
MDT MONTANA DEPARTMENT OF TRANSPORTATION	

RIPRAP & GROUTED RIPRAP DRAINAGE CHUTE

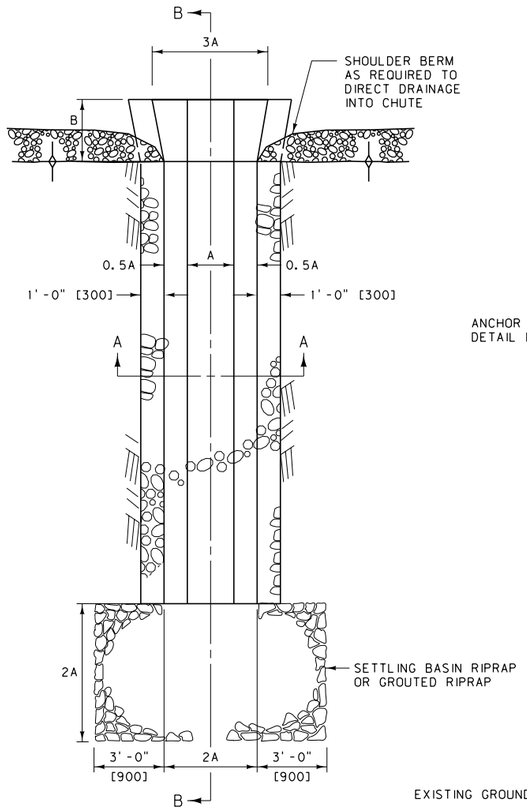

PLAN VIEW

RIPRAP:

USE RANDOM RIPRAP CONFORMING TO SECTION 701.06 OF THE STANDARD SPECIFICATIONS.

GROUT:

USE CEMENT GROUT CONFORMING TO SECTION 713.04 OF THE STANDARD SPECIFICATIONS.

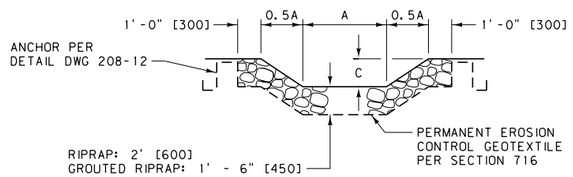

SECTION A-A

RIPRAP & GROUTED RIPRAP CHUTE

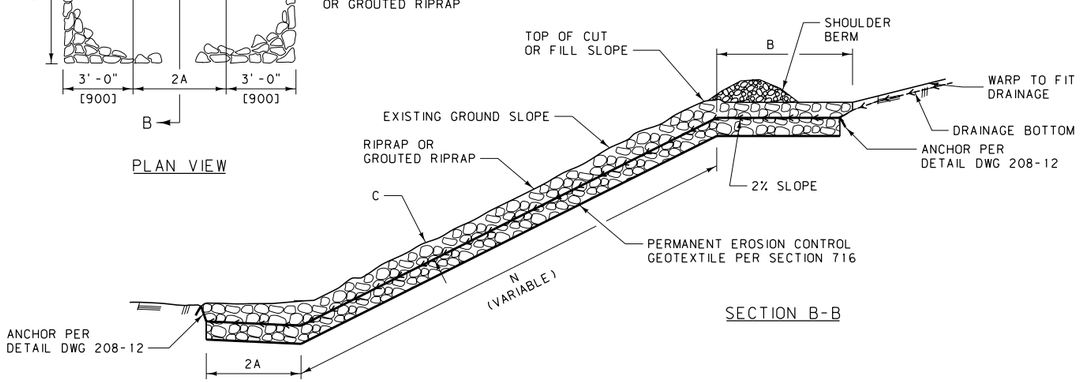

SECTION B-B

TURF REINFORCEMENT MAT DRAINAGE CHUTE

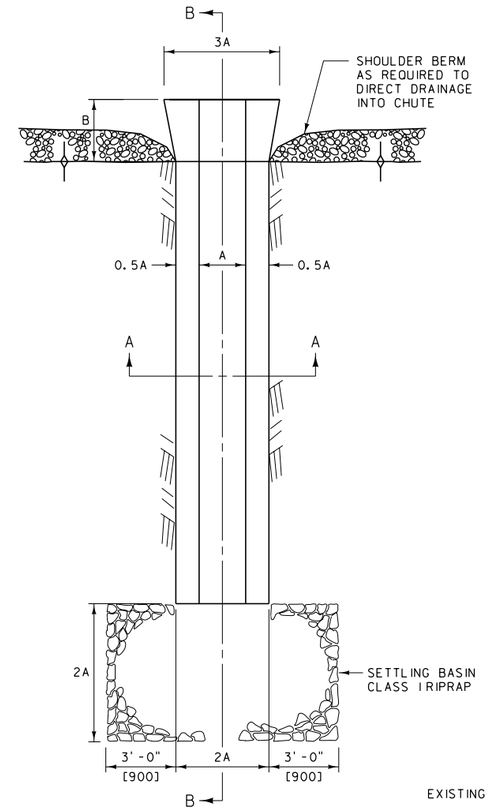

PLAN VIEW

TURF REINFORCEMENT MAT:

USE TURF REINFORCEMENT MAT (TRM) CONFORMING TO SECTION 713.12 OF THE STANDARD SPECIFICATIONS.

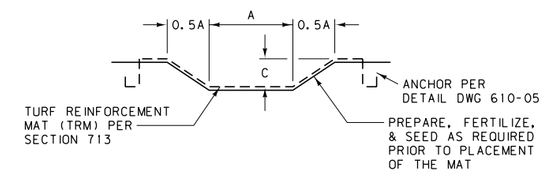

SECTION A-A

TURF REINFORCEMENT MAT CHUTE

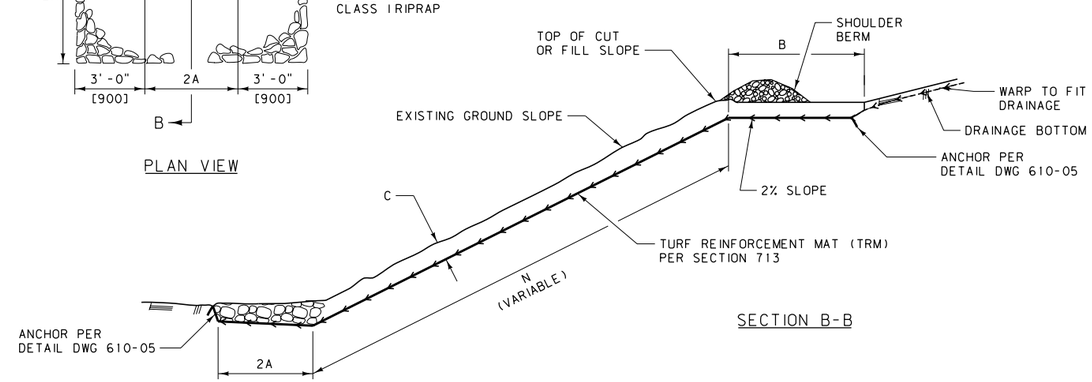

SECTION B-B

TYPE	DIMENSIONS			RIPRAP CLASS	QUANTITIES			
	A	B	C		RIPRAP	GROUTED RIPRAP	TURF REINFORCEMENT MAT	ADD. RIPRAP FOR TRM CHUTES
1	2'-0"	4'-0"	1'-0"	I	5.23 C.Y. + (N x 0.506) C.Y./L.F.	✱ 7.84 S.Y. + (N x 0.759) S.Y./L.F.	6.96 S.Y. + (N x 0.537) S.Y./L.F.	✱ 1.5 C.Y.
2	2'-0"	4'-0"	1'-6"	I	5.42 C.Y. + (N x 0.563) C.Y./L.F.	✱ 8.13 S.Y. + (N x 0.845) S.Y./L.F.	7.25 S.Y. + (N x 0.623) S.Y./L.F.	✱ 2.2 C.Y.
3	4'-0"	8'-0"	1'-6"	II	15.86 C.Y. + (N x 0.815) C.Y./L.F.	✱ 23.80 S.Y. + (N x 1.222) S.Y./L.F.	22.02 S.Y. + (N x 1.000) S.Y./L.F.	✱ 9.8 C.Y.
4	4'-0"	8'-0"	2'-0"	II	16.18 C.Y. + (N x 0.863) C.Y./L.F.	✱ 24.27 S.Y. + (N x 1.295) S.Y./L.F.	22.49 S.Y. + (N x 1.073) S.Y./L.F.	✱ 13.0 C.Y.

TYPE	METRIC DIMENSIONS			RIPRAP CLASS	METRIC QUANTITIES			
	A	B	C		RIPRAP	GROUTED RIPRAP	TURF REINFORCEMENT MAT	ADD. RIPRAP FOR TRM CHUTES
1	600	1200	300	I	3.81 m³ + (N x 1.229) m³/m	✱ 6.35 m² + (N x 2.049) m²/m	5.63 m² + (N x 1.449) m²/m	✱ 1.2 m³
2	600	1200	450	I	3.95 m³ + (N x 1.369) m³/m	✱ 6.59 m² + (N x 2.282) m²/m	5.87 m² + (N x 1.682) m²/m	✱ 1.7 m³
3	1200	2400	450	II	11.57 m³ + (N x 1.980) m³/m	✱ 19.28 m² + (N x 3.300) m²/m	17.84 m² + (N x 2.700) m²/m	✱ 7.5 m³
4	1200	2400	600	II	11.79 m³ + (N x 2.098) m³/m	✱ 19.66 m² + (N x 3.497) m²/m	18.22 m² + (N x 2.897) m²/m	✱ 10.0 m³

✱ USE CLASS-I RIPRAP FOR ALL GROUTED RIPRAP TYPES & TRM CHUTES

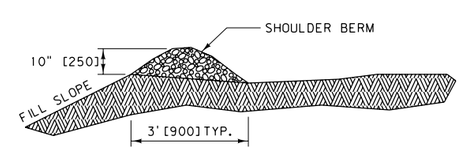

SHOULDER BERM DETAIL (TYP. FOR ALL TYPES)

INLET CONDITIONS (TYP. FOR ALL TYPES):

DEPRESS THE INLET BELOW THE NATURAL DRAINAGE BOTTOM TO PREVENT FLOW FROM BYPASSING THE DRAINAGE CHUTE.

UNITS SHOWN IN BRACKETS [] ARE METRIC AND ARE IN MILLIMETERS (mm) UNLESS OTHER UNITS ARE SHOWN.

DETAILED DRAWING

REFERENCE STANDARD SPEC. SECTION 613, 701, 713, 716

DWG. NO. 613-18

DRAINAGE CHUTES

EFFECTIVE: SEPTEMBER 2014

MDT MONTANA DEPARTMENT OF TRANSPORTATION

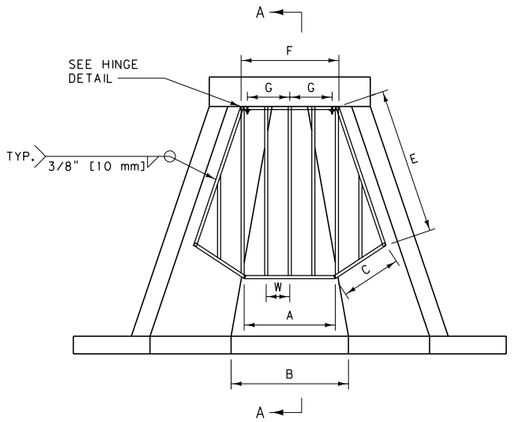

PLAN VIEW

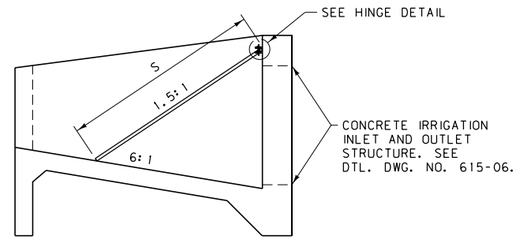

SECTION A-A

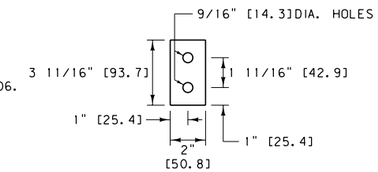

PLATE DETAIL

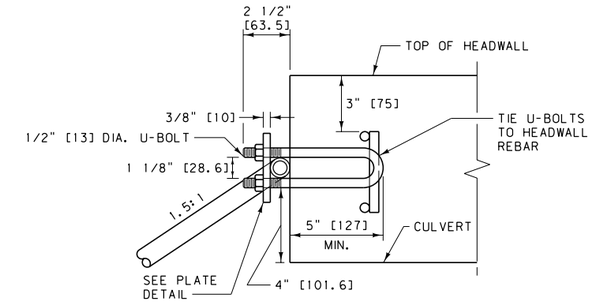

HINGE DETAIL

CSP									
CULVERT DIA. D	DIMENSIONS (FT.)								3/4" GSP ④
	B	A	C	E	F	S	W	G	
18"	1.5	1.19	0.74	2.32	0.80	2.76	0.36	0.23	19.54'
18"	2.5	1.97	0.69	2.42	0.80	2.76	0.46	0.27	20.21'
18"	3.5	2.75	0.64	2.57	0.80	2.76	0.43	0.27	24.60'
24"	2.0	1.55	1.07	2.81	1.30	3.48	0.50	0.37	25.26'
24"	3.0	2.28	1.01	2.91	1.30	3.48	0.59	0.46	26.19'
24"	4.0	3.02	0.96	3.03	1.30	3.48	0.51	0.38	31.81'
30"	2.5	1.91	1.40	3.31	1.80	4.20	0.47	0.77	37.99'
30"	3.5	2.22	1.34	3.40	1.80	4.20	0.54	0.77	37.33'
30"	4.5	3.33	1.28	3.51	1.80	4.20	0.60	0.77	38.73'
36"	3.0	2.27	1.73	3.81	2.30	4.92	0.57	1.00	45.20'
36"	4.0	3.96	1.67	3.89	2.30	4.92	0.63	1.00	47.38'
36"	5.0	3.65	1.61	3.99	2.30	4.92	0.56	0.99	53.16'
42"	3.5	2.63	2.06	4.31	2.80	5.64	0.67	1.20	52.15'
42"	4.5	3.31	1.99	4.39	2.80	5.64	0.59	1.00	60.53'
42"	5.5	3.99	1.93	4.81	2.80	5.64	0.63	1.10	61.91'
48"	4.0	2.99	2.38	4.81	3.30	6.37	0.62	1.50	68.28'
48"	5.0	3.66	2.32	4.89	3.30	6.37	0.66	1.50	69.12'
48"	6.0	4.33	2.26	4.97	3.30	6.37	0.59	1.50	79.39'

METRIC CSP									
CULVERT DIA. D (mm)	DIMENSIONS (mm)								19 DIA. GSP ④ (mm)
	B	A	C	E	F	S	W	G	
450	450	363	226	707	244	841	110	70	5956
450	750	601	210	738	244	841	140	82	6160
450	1050	838	195	783	244	841	131	82	7498
600	600	472	326	857	396	1061	152	113	7699
600	900	695	308	887	396	1061	180	140	7983
600	1200	921	293	924	396	1061	155	116	9696
750	750	582	427	1009	549	1280	143	235	11 579
750	1050	677	408	1036	549	1280	165	235	11 378
750	1350	1015	390	1070	549	1280	183	235	11 805
900	900	692	527	1161	701	1500	174	305	13 777
900	1200	1207	509	1186	701	1500	192	305	14 441
900	1500	1113	491	1216	701	1500	171	302	16 203
1050	1050	802	628	1314	853	1719	204	366	15 895
1050	1350	1009	607	1338	853	1719	180	305	18 450
1050	1650	1216	588	1466	853	1719	192	335	18 870
1200	1200	911	725	1466	1006	1942	189	457	20 812
1200	1500	1116	707	1491	1006	1942	201	457	21 068
1200	1800	1320	689	1515	1006	1942	180	457	24 198

NOTES:

① PAINT ALL WELDS AND OTHER NON-GALVANIZED PARTS WITH ONE COAT OF ZINC RICH PAINT AND TWO COATS OF ALUMINUM PAINT PER SECTION 710.

② W = CENTER TO CENTER PIPE SPACING.

③ TWO 1/2" [13]DIA. U-BOLT AND PLATE ASSEMBLIES NEEDED PER TRASHGUARD.

④ 3/4" [19]DIA. SCHEDULE 80 GALV. STEEL PIPE (GSP).

RCP									
CULVERT DIA. D	DIMENSIONS (FT.)								3/4" GSP ④
	B	A	C	E	F	S	W	G	
18"	1.5	1.27	0.80	2.58	0.80	3.06	0.39	0.26	21.38'
18"	2.5	2.14	0.74	2.70	0.80	3.06	0.50	0.27	22.03'
18"	3.5	3.00	0.69	2.87	0.80	3.06	0.46	0.27	27.05'
24"	2.0	1.62	1.14	3.13	1.30	3.84	0.53	0.40	27.50'
24"	3.0	2.46	1.08	3.24	1.30	3.84	0.47	0.34	33.81'
24"	4.0	3.27	1.02	3.38	1.30	3.84	0.55	0.42	34.65'
30"	2.5	2.03	1.48	3.68	1.80	4.62	0.50	0.77	40.94'
30"	3.5	2.81	1.41	3.79	1.80	4.62	0.57	0.77	41.30'
30"	4.5	3.59	1.36	3.91	1.80	4.62	0.52	0.77	48.45'
36"	3.0	2.41	1.82	4.24	2.30	5.41	0.60	1.00	48.83'
36"	4.0	3.16	1.75	4.34	2.30	5.41	0.54	0.95	57.02'
36"	5.0	3.92	1.69	4.44	2.30	5.41	0.60	1.00	57.31'
42"	3.5	2.79	2.16	4.79	2.80	6.19	0.57	1.00	64.85'
42"	4.5	3.53	2.09	4.88	2.80	6.19	0.62	1.10	65.70'
42"	5.5	4.27	2.03	4.99	2.80	6.19	0.67	1.20	66.59'
48"	4.0	3.17	2.49	5.35	3.30	6.97	0.65	1.50	73.74'
48"	5.0	3.90	2.43	5.44	3.30	6.97	0.58	1.50	85.36'
48"	6.0	4.63	2.36	5.53	3.30	6.97	0.63	1.50	85.17'

DIMENSIONS AND QUANTITIES ARE FOR ESTIMATING PURPOSES ONLY.

METRIC RCP									
CULVERT DIA. D (mm)	DIMENSIONS (mm)								19 DIA. GSP ④ (mm)
	B	A	C	E	F	S	W	G	
450	450	387	244	786	244	933	119	79	6517
450	750	652	226	823	244	933	152	82	6715
450	1050	914	210	875	244	933	140	82	8245
600	600	494	348	954	396	1170	162	122	8382
600	900	750	329	988	396	1170	143	104	10 305
600	1200	997	311	1030	396	1170	168	128	10 561
750	750	619	451	1122	549	1408	152	235	12 479
750	1050	857	430	1155	549	1408	174	235	12 588
750	1350	1094	415	1192	549	1408	159	235	14 768
900	900	735	555	1292	701	1649	183	305	14 883
900	1200	963	533	1323	701	1649	165	290	17 380
900	1500	1195	515	1353	701	1649	183	305	17 468
1050	1050	850	658	1460	853	1887	174	305	19 766
1050	1350	1076	637	1487	853	1887	189	335	20 025
1050	1650	1302	619	1521	853	1887	204	366	20 297
1200	1200	966	759	1631	1006	2125	198	457	22 476
1200	1500	1189	741	1658	1006	2125	177	457	26 018
1200	1800	1411	719	1686	1006	2125	192	457	25 960

DIMENSIONS AND QUANTITIES ARE FOR ESTIMATING PURPOSES ONLY.

UNITS SHOWN IN BRACKETS [] ARE METRIC AND ARE IN MILLIMETERS (mm) UNLESS OTHER UNITS ARE SHOWN.

DETAILED DRAWING

REFERENCE STANDARD SPEC. SECTION 615 AND 710

DWG. NO. 615-02

TRASHGUARD FOR CONCRETE IRRIGATION INLET AND OUTLET TRANSITION STRUCTURES

EFFECTIVE: SEPTEMBER 2014

MDT MONTANA DEPARTMENT OF TRANSPORTATION

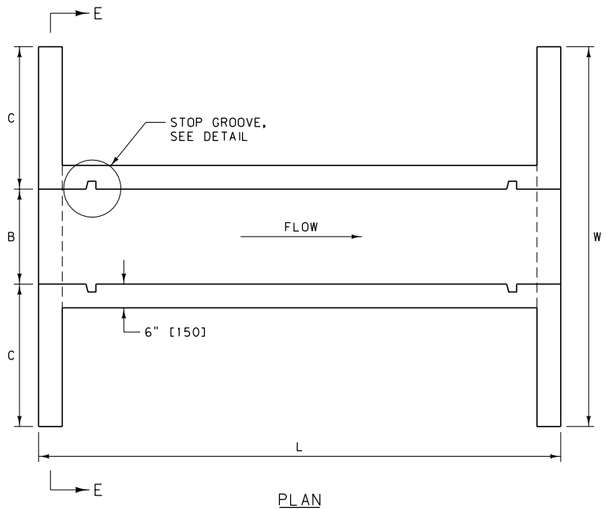

PLAN
TYPE I

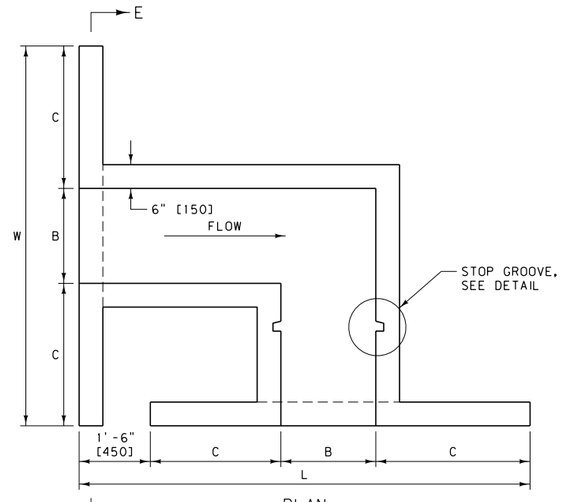

PLAN
TYPE II

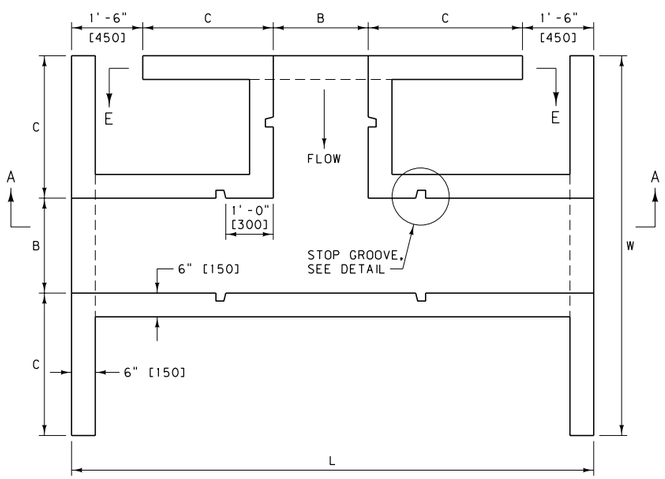

PLAN
TYPE III

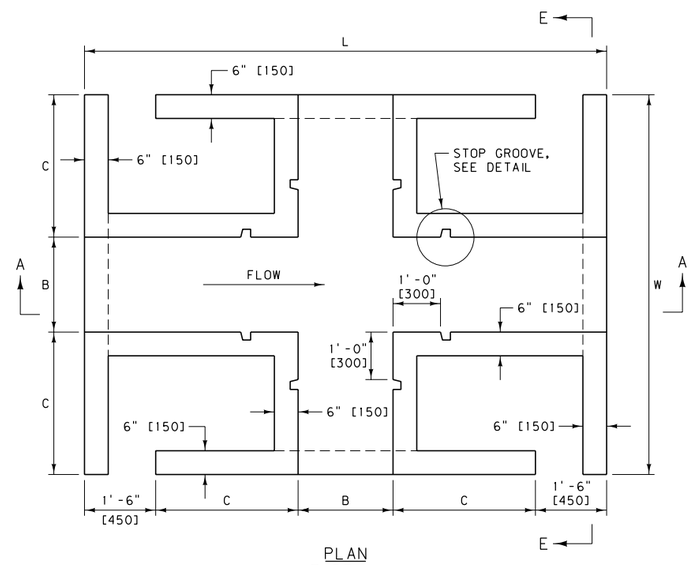

PLAN
TYPE IV

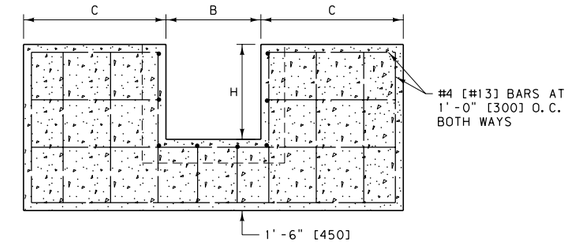

SECTION E-E

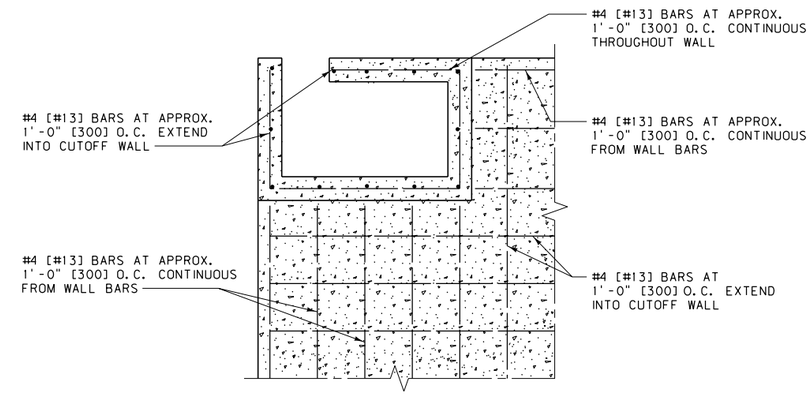

SECTION F-F

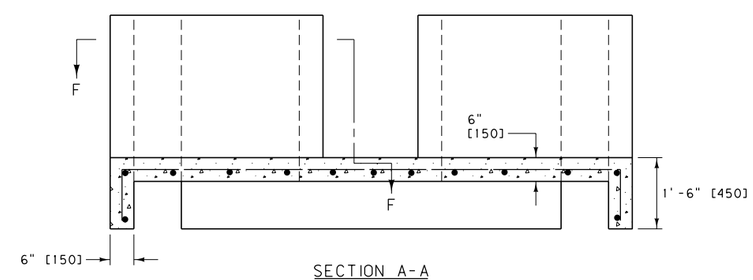

SECTION A-A

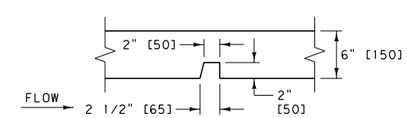

STOP GROOVE DETAIL

UNITS SHOWN IN BRACKETS [] ARE METRIC AND ARE IN MILLIMETERS (mm) UNLESS OTHER UNITS ARE SHOWN.

DIMENSIONS AND QUANTITIES							
	B	C	H	L	W	CL. GENERAL CONC. OR EQUAL (C.Y.)	REINFORCING STEEL (LB.)
TYPE I	2'-0"	3'-0"	2'-0"	6'-0"	8'-0"	1.5	114.0
	2'-6"	3'-6"	2'-0"	6'-0"	9'-6"	1.7	124.4
	3'-0"	4'-0"	2'-6"	6'-0"	11'-0"	2.2	129.0
TYPE II	2'-0"	3'-0"	2'-0"	9'-6"	8'-0"	2.0	152.0
	2'-6"	3'-6"	2'-0"	11'-0"	9'-6"	2.4	190.0
	3'-0"	4'-0"	2'-6"	12'-6"	11'-0"	3.3	250.8
TYPE III	2'-0"	3'-0"	2'-0"	11'-0"	8'-0"	2.8	212.8
	2'-6"	3'-6"	2'-0"	12'-6"	9'-6"	3.4	258.4
	3'-0"	4'-0"	2'-6"	14'-0"	11'-0"	4.6	349.6
TYPE IV	2'-0"	3'-0"	2'-0"	11'-0"	8'-0"	3.4	266.0
	2'-6"	3'-6"	2'-0"	12'-6"	9'-6"	4.2	319.2
	3'-0"	4'-0"	2'-6"	14'-0"	11'-0"	5.6	425.6

METRIC DIMENSIONS AND QUANTITIES							
	B (mm)	C (mm)	H (mm)	L (mm)	W (mm)	CL. GENERAL CONC. OR EQUAL (m^3)	REINF. STEEL (kg)
TYPE I	600	900	600	1850	2400	1.1	54.7
	750	1050	600	1850	2850	1.3	60.7
	900	1200	750	1850	3300	1.6	80.2
TYPE II	600	900	600	2850	2400	1.4	69.8
	750	1050	600	3300	2850	1.8	84.2
	900	1200	750	3750	3300	2.4	118.1
TYPE III	600	900	600	3300	2400	2.0	98.7
	750	1050	600	3750	2850	2.5	117.6
	900	1200	750	4200	3300	3.3	164.3
TYPE IV	600	900	600	3300	2400	2.5	121.1
	750	1050	600	3750	2850	3.0	144.4
	900	1200	750	4200	3300	4.1	201.9

NOTES:

1. MODIFY DIVISION BOX DIMENSIONS IF REQUIRED IN THE PLANS.
2. QUANTITIES ARE FOR ESTIMATING PURPOSES ONLY.

DETAILED DRAWING

REFERENCE STANDARD SPEC. SECTION 552, 615

DWG. NO. 615-04

STANDARD CONCRETE IRRIGATION DIVISION BOXES

EFFECTIVE: SEPTEMBER 2014

MDT MONTANA DEPARTMENT OF TRANSPORTATION

INLET AND OUTLET TRANSITION

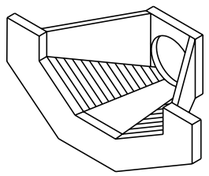

ISOMETRIC VIEW OF TRANSITION

PLACE REBAR IN CENTER OF WALLS, SLAB, ETC. UNLESS OTHERWISE SPECIFIED.

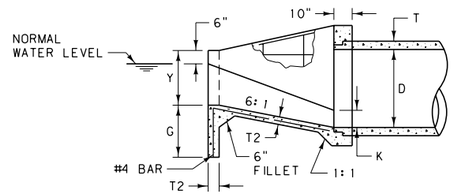

SECTION B-B

SPACE REINFORCING BARS APPROX. 12" EACH WAY THROUGHOUT STRUCTURE. USE CONTINUOUS BARS IN FLOORS AND WALLS WHENEVER POSSIBLE. WHEN SPLICES ARE MADE, LAP REINFORCING BAR 1'-6".

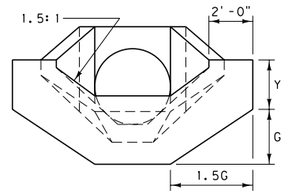

ELEVATION

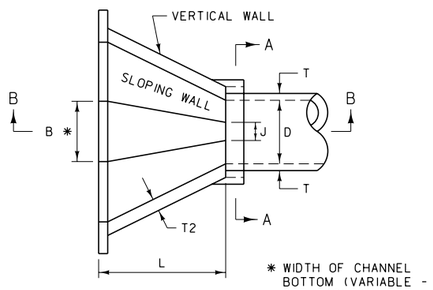

* WIDTH OF CHANNEL BOTTOM (VARIABLE - SEE TABLE)

PLAN VIEW

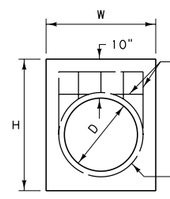

SECTION A-A

FOR CSP

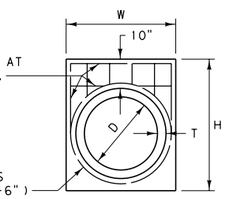

SECTION A-A

FOR RCP

CHAMFER ALL EXPOSED CORNERS TO 1".

INLET AND OUTLET CONCRETE TRANSITIONS FOR CSP																	
CULVERT		DIMENSIONS								QUANTITIES							
										B = D			B = D + 1'-0"			B = D + 2'-0"		
DIA. D	AREA (SQ. FT.)	J	H	L	T2	W	K	Y	G	B	CL GEN CONC. (C.Y.)	#4 REBAR (LB.)	B	CL GEN CONC. (C.Y.)	#4 REBAR (LB.)	B	CL GEN CONC. (C.Y.)	#4 REBAR (LB.)
18"	1.77	0.45'	3'-5"	3'-0"	6"	2'-9"	0.35'	1'-3"	2'-0"	1'-6"	0.8	66	2'-6"	0.9	73	3'-6"	1.0	81
24"	3.14	0.61'	4'-0"	4'-0"	6"	3'-3"	0.46'	1'-6"	2'-0"	2'-0"	1.2	94	3'-0"	1.3	103	4'-0"	1.4	112
30"	4.91	0.76'	4'-6"	5'-0"	6"	3'-9"	0.58'	1'-9"	2'-0"	2'-6"	1.6	124	3'-6"	1.7	134	4'-6"	1.8	144
36"	7.07	0.91'	5'-1"	6'-0"	6"	4'-3"	0.70'	2'-0"	2'-6"	3'-0"	2.1	162	4'-0"	2.2	173	5'-0"	2.3	184
42"	9.62	1.10'	5'-8"	7'-0"	6"	4'-9"	0.81'	2'-3"	2'-6"	3'-6"	2.6	200	4'-6"	2.7	212	5'-6"	2.9	225
48"	12.57	1.20'	6'-3"	8'-0"	8"	5'-3"	0.93'	2'-6"	2'-6"	4'-0"	4.1	245	5'-0"	4.3	259	6'-0"	4.4	272

INLET AND OUTLET CONCRETE TRANSITIONS FOR RCP																		
CULVERT		DIMENSIONS									QUANTITIES							
											B = D			B = D + 1'-0"			B = D + 2'-0"	
DIA. D	AREA (SQ. FT.)	J	H	L	T	T2	W	K	Y	G	B	CL GEN CONC. (C.Y.)	#4 REBAR (LB.)	B	CL GEN CONC. (C.Y.)	#4 REBAR (LB.)	B	CL GEN CONC. (C.Y.)	#4 REBAR (LB.)
18"	1.77	0.45'	3'-8"	3'-0"	2 1/2"	6"	3'-2"	0.35'	1'-3"	2'-0"	1'-6"	0.9	68	2'-6"	1.0	76	3'-6"	1.0	83
24"	3.14	0.61'	4'-3"	4'-0"	3"	6"	3'-9"	0.46'	1'-6"	2'-0"	2'-0"	1.2	98	3'-0"	1.3	107	4'-0"	1.4	116
30"	4.91	0.76'	4'-10"	5'-0"	3 1/2"	6"	4'-4"	0.58'	1'-9"	2'-0"	2'-6"	1.7	128	3'-6"	1.8	138	4'-6"	1.9	149
36"	7.07	0.91'	5'-6"	6'-0"	4"	6"	4'-11"	0.70'	2'-0"	2'-6"	3'-0"	2.2	168	4'-0"	2.3	179	5'-0"	2.4	190
42"	9.62	1.10'	6'-1"	7'-0"	4 1/2"	6"	5'-6"	0.81'	2'-3"	2'-6"	3'-6"	2.7	212	4'-6"	2.8	224	5'-6"	2.9	237
48"	12.57	1.20'	6'-8"	8'-0"	5"	8"	6'-1"	0.93'	2'-6"	2'-6"	4'-0"	4.2	254	5'-0"	4.3	267	6'-0"	4.6	280

NOTES:

① INSTALL STRUCTURES OUTSIDE THE CLEAR ZONE.

② PROVIDE TRASHGUARDS WHEN REQUIRED. SEE DTL. DWG. NO. 615-02.

METRIC INLET AND OUTLET TRANSITION

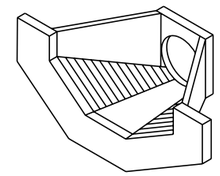

ISOMETRIC VIEW OF TRANSITION

PLACE REBAR IN CENTER OF WALLS, SLAB, ETC. UNLESS OTHERWISE SPECIFIED.

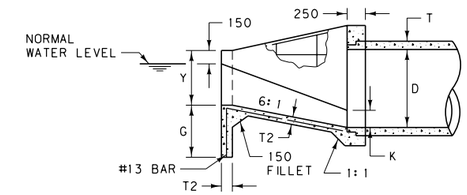

SECTION B-B

SPACE REINFORCING BARS APPROX. 300 mm EACH WAY THROUGHOUT STRUCTURE. USE CONTINUOUS BARS IN FLOORS AND WALLS WHENEVER POSSIBLE. WHEN SPLICES ARE MADE, LAP REINFORCING BAR 450 mm.

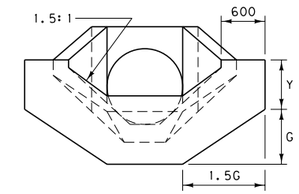

ELEVATION

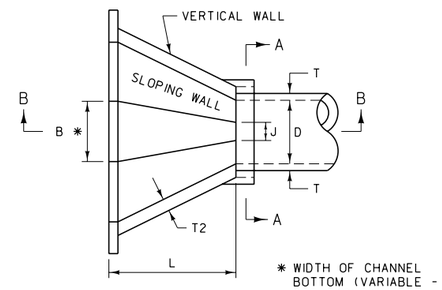

* WIDTH OF CHANNEL BOTTOM (VARIABLE - SEE TABLE)

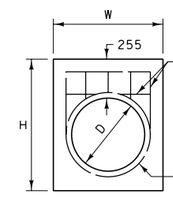

SECTION A-A

FOR CSP

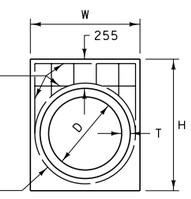

SECTION A-A

FOR RCP

CHAMFER ALL EXPOSED CORNERS TO 25 mm.

METRIC INLET AND OUTLET CONCRETE TRANSITIONS FOR CSP																	
CULVERT		DIMENSIONS								QUANTITIES							
										B = D			B = D + 300			B = D + 600		
DIA. D	AREA (m^2)	J	H	L	T2	W	K	Y	G	B	CL GEN CONC. (m^3)	#13 REBAR (kg)	B	CL GEN CONC. (m^3)	#13 REBAR (kg)	B	CL GEN CONC. (m^3)	#13 REBAR (kg)
450	0.159	140	1050	900	150	850	105	380	600	450	0.6	31.3	750	0.7	33.6	1050	0.7	36.3
600	0.283	180	1250	1200	150	1000	140	460	600	600	0.9	43.5	900	1.0	46.3	1200	1.0	49.0
750	0.442	240	1400	1500	150	1100	180	530	600	750	1.2	55.3	1050	1.2	58.5	1350	1.3	61.7
900	0.636	275	1550	1800	150	1300	210	610	750	900	1.6	75.8	1200	1.7	78.9	1500	1.7	83.5
1050	0.866	310	1750	2100	150	1500	240	690	750	1050	2.0	90.7	1350	2.1	95.7	1650	2.2	100.2
1200	1.131	365	1900	2400	200	1600	280	760	750	1200	3.1	116.6	1500	3.2	121.1	1800	3.4	125.2

METRIC INLET AND OUTLET CONCRETE TRANSITIONS FOR RCP																		
CULVERT		DIMENSIONS									QUANTITIES							
											B = D			B = D + 300			B = D + 600	
DIA. D	AREA (m^2)	J	H	L	T	T2	W	K	Y	G	B	CL GEN CONC. (m^3)	#13 REBAR (kg)	B	CL GEN CONC. (m^3)	#13 REBAR (kg)	B	CL GEN CONC. (m^3)	#13 REBAR (kg)
450	0.164	140	1100	900	63.5	150	970	105	380	600	450	0.6	33.6	750	0.7	36.3	1050	0.8	38.6
600	0.292	185	1300	1200	76.2	150	1150	140	460	600	600	0.9	45.4	900	1.0	48.1	1200	1.0	50.8
750	0.456	230	1500	1500	88.9	150	1320	175	530	600	750	1.2	57.6	1050	1.3	60.8	1350	1.4	64.0
900	0.657	275	1700	1800	101.6	150	1500	215	610	750	900	1.6	78.9	1200	1.7	82.1	1500	1.8	86.6
1050	0.894	325	1900	2100	114.3	150	1680	245	690	750	1050	2.1	96.2	1350	2.1	100.7	1650	2.2	105.2
1200	1.167	370	2050	2400	127.0	200	1860	280	760	750	1200	3.1	121.1	1500	3.3	125.6	1800	3.4	130.2

NOTES:

① INSTALL STRUCTURES OUTSIDE THE CLEAR ZONE.

② PROVIDE TRASHGUARDS WHEN REQUIRED. SEE DTL. DWG. NO. 615-02.

ALL DIMENSIONS ARE MILLIMETERS (mm) UNLESS OTHERWISE NOTED.

DETAILED DRAWING

REFERENCE STANDARD SPEC. SECTION 615

DWG. NO. 615-06

CONCRETE IRRIGATION INLET AND OUTLET TRANSITION FOR RCP AND CSP PIPES

EFFECTIVE: SEPTEMBER 2014

MDT MONTANA DEPARTMENT OF TRANSPORTATION

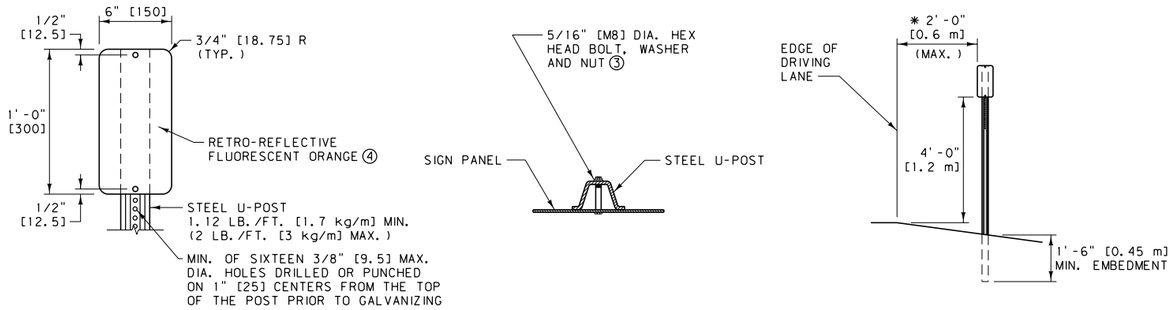

TYPE 2 OBJECT MARKER

TYPE 2 OBJECT MARKER NOTES:

① USE TYPE 2 OBJECT MARKERS TO DELINEATE ROADSIDE CONSTRICTIONS OF THE CLEAR ZONE (i.e. DROP OFFS, OBSTACLES, ABRUPT CHANGES IN ROADWAY ALIGNMENT, ETC.)

② DO NOT USE TYPE 2 OBJECT MARKERS AS CHANNELIZING DEVICES.

③ ATTACH PANELS TO POSTS AT BOTH TOP AND BOTTOM HOLE LOCATIONS.

④ USE RETRO-REFLECTIVE SHEETING AS PER THE CONTRACT.

* REDUCE OR ELIMINATE THE 2'-0" [0.6 m] DISTANCE WHEN OBSTACLE OR HAZARD IS LESS THAN 2'-0" [0.6 m] FROM THE EDGE OF THE DRIVING LANE.

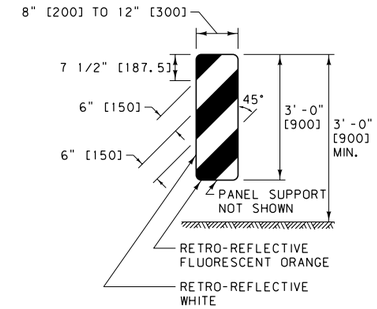

PORTABLE VERTICAL PANEL

(VP-1R SHOWN. REVERSE FOR VP-1L.)

PORTABLE VERTICAL PANEL NOTES:

① USE PORTABLE VERTICAL PANELS AS CHANNELIZING DEVICES ONLY. DO NOT USE PORTABLE VERTICAL PANELS TO DELINEATE ROADSIDE CONSTRICTIONS OF THE CLEAR ZONE.

② VERTICAL PANELS DESIGNATED "R" ARE PLACED TO THE RIGHT SIDE OF APPROACHING TRAFFIC. THOSE DESIGNATED "L" ARE PLACED TO THE LEFT SIDE.

③ USE RETRO-REFLECTIVE SHEETING AS PER THE CONTRACT.

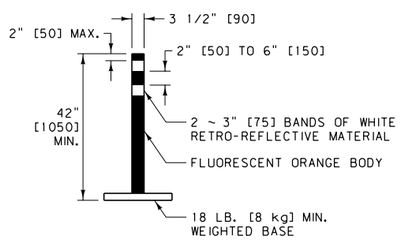

FLEXIBLE GUIDE POST
(TUBULAR MARKER)

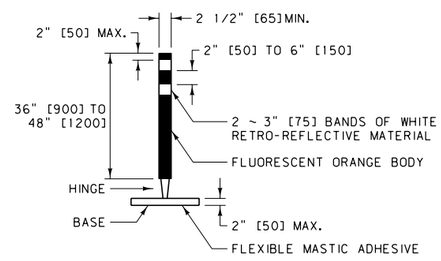

HINGED FLEXIBLE GUIDE POST
(TUBULAR MARKER)

(SELF RIGHTING AFTER IMPACT)

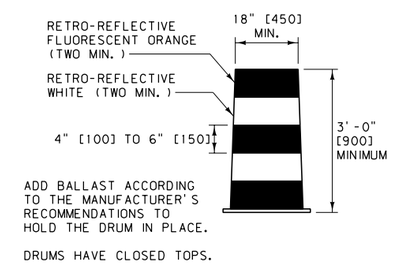

PLASTIC DRUM

UNITS SHOWN IN BRACKETS [] ARE METRIC AND ARE IN MILLIMETERS (mm) UNLESS OTHER UNITS ARE SHOWN.

FLEXIBLE GUIDE POST AND PLASTIC DRUM NOTES:

① USE FLEXIBLE GUIDE POSTS AND PLASTIC DRUMS AS CHANNELIZING DEVICES.

② USE ASTM TYPE III RETRO-REFLECTIVE SHEETING ON ALL PLASTIC DRUMS AND FLEXIBLE GUIDE POSTS.

GENERAL NOTES:

① SEE THE MANUAL ON UNIFORM TRAFFIC CONTROL DEVICES (MUTCD) PART 6 FOR ADDITIONAL INFORMATION.

DETAILED DRAWING	
REFERENCE STANDARD SPEC. SECTION 618	DWG. NO. 618-00
CHANNELIZING DEVICES AND OBJECT MARKERS	
EFFECTIVE: SEPTEMBER 2014	

MDT MONTANA DEPARTMENT OF TRANSPORTATION

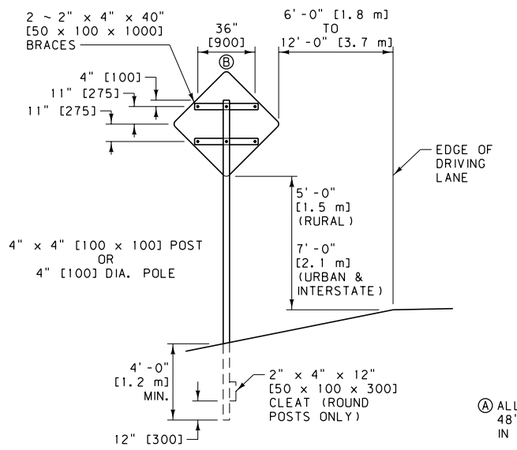

WARNING

Ⓐ ALL WARNING SIGNS ARE 48" x 48" [1200 x 1200] IN SIZE.

Ⓑ DIMENSIONS ARE FROM ℄ BOLT TO ℄ BOLT.

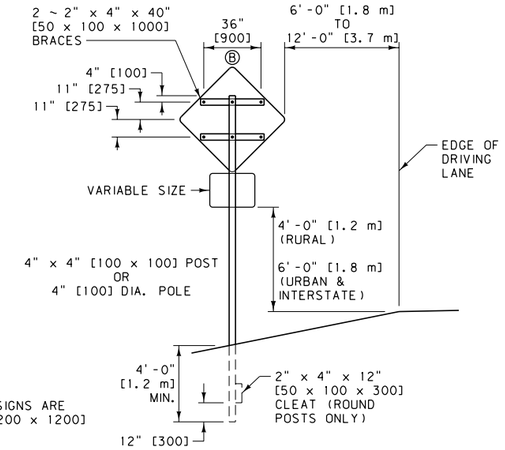

WARNING
WITH SUPPLEMENTAL PANEL

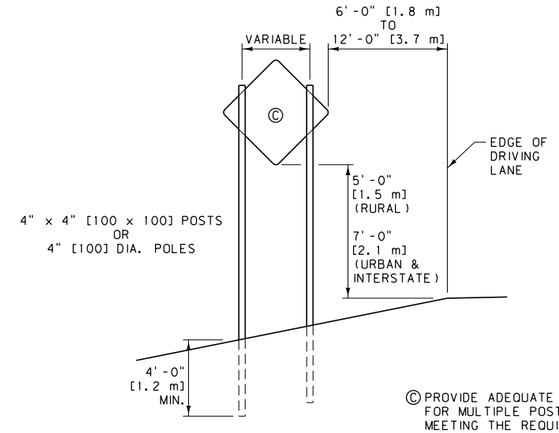

TWO POSTS

Ⓒ PROVIDE ADEQUATE SIGN BRACING FOR MULTIPLE POST INSTALLATIONS MEETING THE REQUIREMENTS OF NCHRP 350.

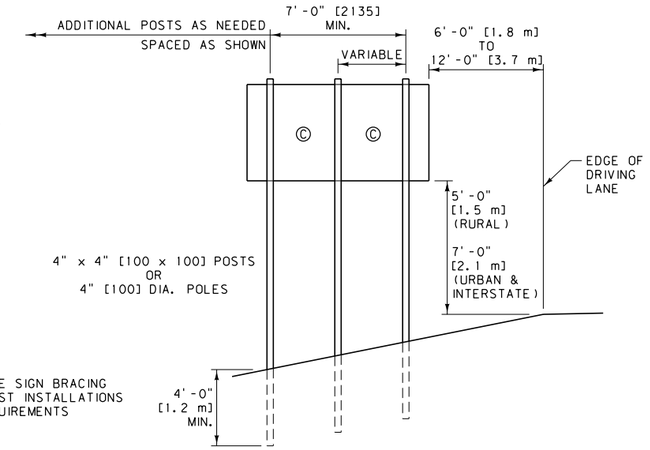

THREE OR MORE POSTS

TYPICAL MULTIPLE POST INSTALLATIONS
(FOR CONSTRUCTION SIGNING ONLY)

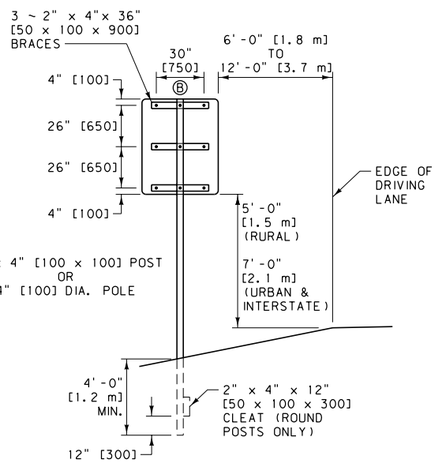

REGULATORY
48" x 60"
[1200 x 1500]
PANEL

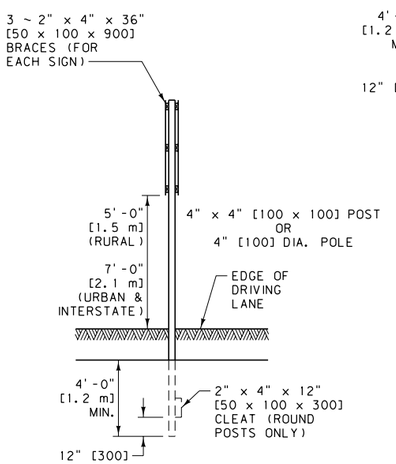

REGULATORY
48" x 60"
[1200 x 1500]
PANEL
BACK TO BACK

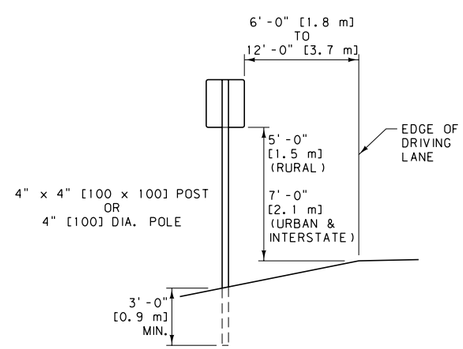

REGULATORY
24" x 30"
[600 x 750]
PANEL

TYPICAL SIGN MOUNTINGS
(FOR CONSTRUCTION SIGNING ONLY)

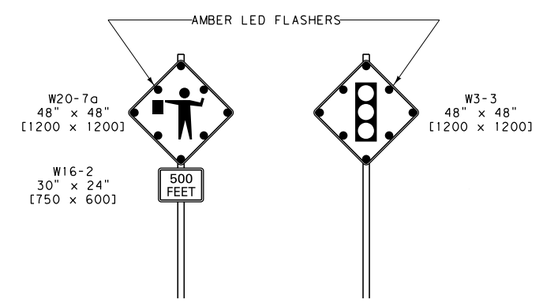

FLASHING FLAGGER AND SIGNAL AHEAD SIGN

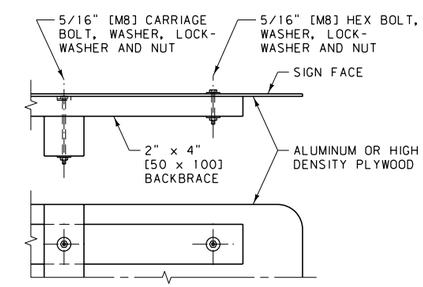

SIGN FASTENING DETAILS

NOTES:

1. FURNISH AND INSTALL POSTS OR POLES MEETING NCHRP 350 REQUIREMENTS.
2. FURNISH POST OR POLE LENGTHS TO ACCOMMODATE THE FOUNDATION DEPTH, THE MOUNTING HEIGHT AND THE MOUNTINGS
3. BACKFILL FOUNDATION HOLES IN 8" [205] LIFTS, THOROUGHLY TAMPING EACH LIFT.
4. IN HIGH WIND AREAS INSTALL LARGER POSTS OR POLES COMPLYING WITH THE FOUNDATION AND BREAKAWAY REQUIREMENTS OF DTL. DWG. NO. 619-20. THE MINIMUM POST SPACING FOR MULTIPLE POSTS LARGER THAN 4" [100] IS 7'-0" [2135].
5. VERTICAL ALIGNMENT OF SIGNS IS TO BE WITHIN 5° OF PLUMB (1" IN 1' [85 IN 1000]).
6. USE THE URBAN MOUNTING HEIGHTS IN BUSINESS, COMMERCIAL, AND RESIDENTIAL DISTRICTS WHERE PARKING AND/OR PEDESTRIAN MOVEMENT IS LIKELY TO OCCUR, OR WHERE THERE ARE OTHER OBSTRUCTIONS TO VIEW. URBAN MOUNTING HEIGHTS MAY ALSO BE USED IN RURAL AREAS FOR INCREASED VISIBILITY.
7. ENSURE THE AMBER LED FLASHERS MEET REQUIREMENTS OF STANDARD SPECIFICATION 715.

UNITS SHOWN IN BRACKETS [] ARE METRIC AND ARE IN MILLIMETERS (mm) UNLESS OTHER UNITS ARE SHOWN.

DETAILED DRAWING	
REFERENCE STANDARD SPEC. SECTION 618, 715	DWG. NO. 618-01
CONSTRUCTION SIGN DETAILS	
EFFECTIVE: SEPTEMBER 2014	

MDT MONTANA DEPARTMENT OF TRANSPORTATION

NOTES:

1. THE MAXIMUM WEIGHT OF THIS ASSEMBLY IS 250 POUNDS [115 kg].
2. USE A 14" [355] WHEEL AND TIRE.
3. AUTOMOTIVE AND EQUIPMENT AXLE ASSEMBLIES MAY NOT BE USED FOR TRAILER-MOUNTED SIGN SUPPORTS.
4. OTHER NCHRP 350 OR MASH CRASH TESTED ASSEMBLIES ARE ACCEPTABLE.

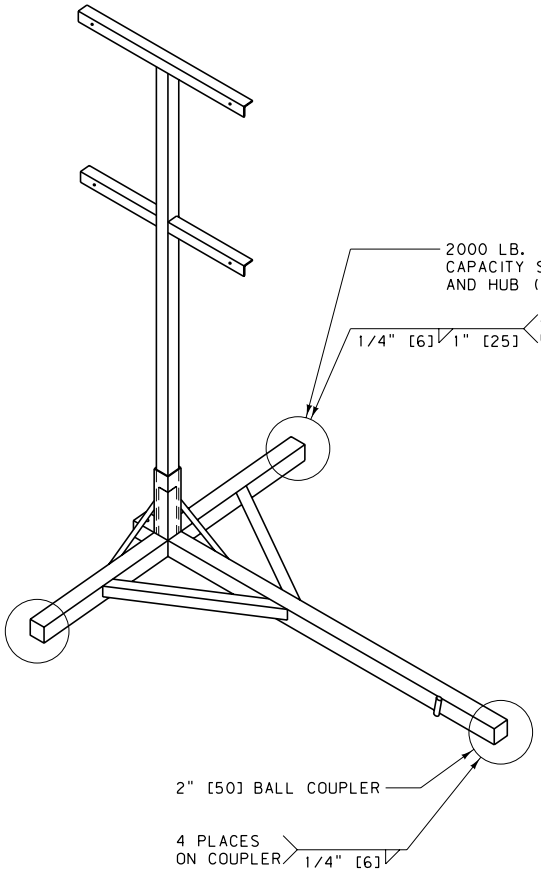

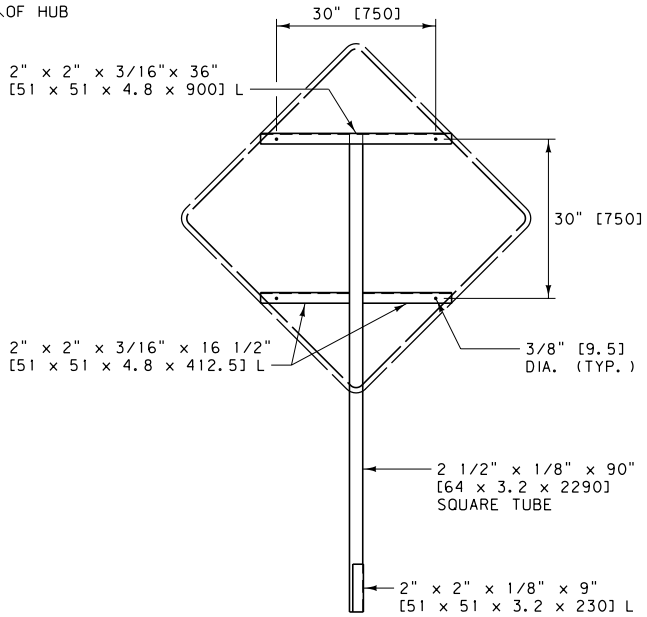

FRONT

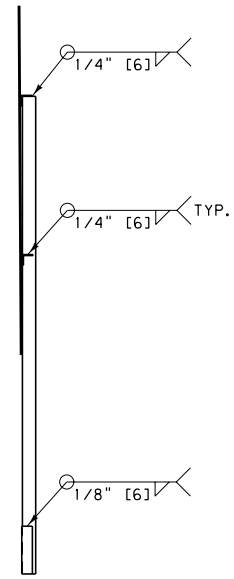

RIGHT

SIGN SUPPORT

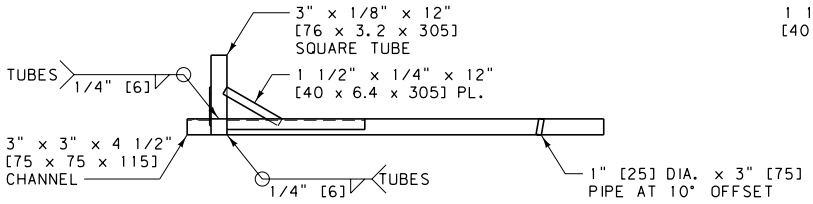

FRONT

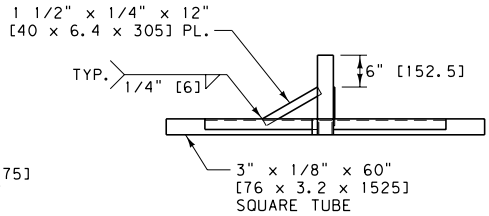

RIGHT

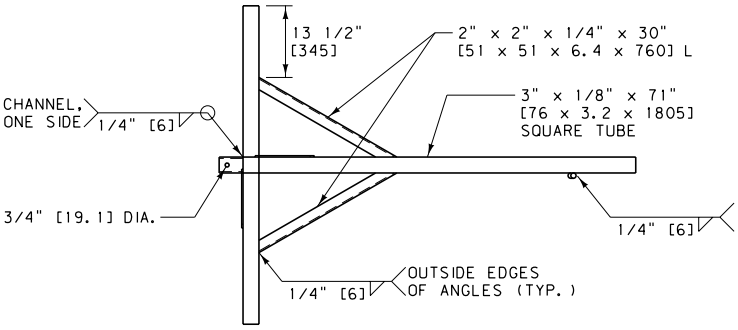

TOP

TRAILER

UNITS SHOWN IN BRACKETS [] ARE METRIC AND ARE IN MILLIMETERS (mm) UNLESS OTHER UNITS ARE SHOWN.

DETAILED DRAWING	
REFERENCE STANDARD SPEC. SECTION 618, 715	DWG. NO. 618-02
PORTABLE SIGN SUPPORT ASSEMBLY	
EFFECTIVE: SEPTEMBER 2014	
MDT MONTANA DEPARTMENT OF TRANSPORTATION	

PORTABLE BARRICADES

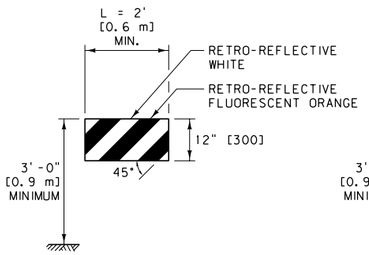

B(I)-R

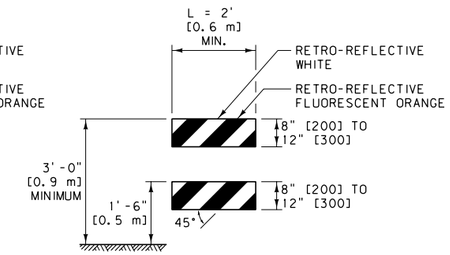

B(II)-R

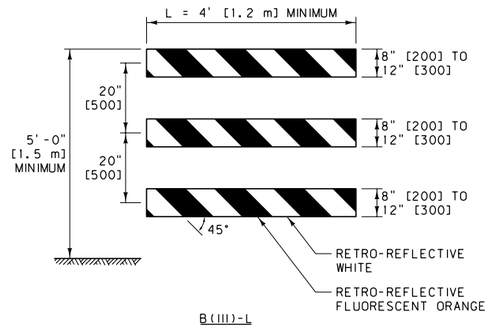

B(III)-L

PORTABLE BARRICADE NOTES:

1. RAIL STRIPES ARE 6" [150] IN WIDTH FOR BARRICADES 3' [0.9 m] OR GREATER IN LENGTH. FOR BARRICADES LESS THAN 3' [0.9 m] IN LENGTH, 4" [100] STRIPES MAY BE USED.
2. THE PREDOMINANT COLOR FOR OTHER BARRICADE COMPONENTS IS WHITE, BUT UNPAINTED GALVANIZED METAL OR ALUMINUM COMPONENTS MAY BE USED.
3. WHERE B(III) BARRICADES ARE TO FACE TRAFFIC FROM TWO DIRECTIONS, STRIPING ON BOTH THE FRONT AND REAR SIDES IS REQUIRED.
4. USE MATERIALS FOR BARRICADE FRAMEWORK, ASSEMBLY, ATTATCHED SIGNS, AND MEANS OF SIGN ATTACHMENT THAT MEET NCHRP 350 AND/OR MASH REQUIREMENTS FOR WORK ZONE DEVICES. OPTIONS FOR SIGN ATTACHMENT ARE:
   - SIGNS UP TO 10 SQ FT [3.0 SQ m] MUST BE BOLTED TO THE TOP RAIL.
   - SIGNS OVER 16 SQ FT [4.9 SQ m] MUST BE BOLTED TO THE RAILS AND BOTH UPRIGHT SUPPORTS.
   - SIGNS MAY BE MOUNTED BEHIND THE BARRICADE ON A SEPERATE NCHRP 350 AND/OR MASH APPROVED SIGN SUPPORT.
5. USE SANDBAGS OF SUFFICIENT WEIGHT TO HOLD THE BARRICADES IN PLACE. WATERPROOF SANDBAGS DURING PERIODS OF FREEZING WEATHER.
6. USE RETRO-REFLECTIVE SHEETING AS PER THE CONTRACT.

RAIL STRIPES

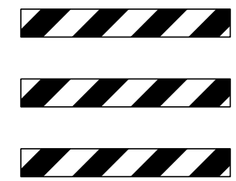

WHERE BARRICADES EXTEND ENTIRELY ACROSS THE ROADWAY, POSITION BARRICADES SO THE STRIPES SLOPE DOWNWARD IN THE DIRECTION TOWARD WHICH THE ROAD USERS MUST TURN.

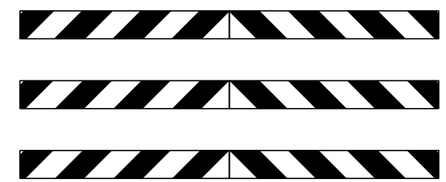

WHERE BOTH LEFT AND RIGHT TURNS ARE PERMITTED, POSITION BARRICADES SO THE STRIPES SLOPE DOWNWARD IN BOTH DIRECTIONS AWAY FROM THE CENTER OF THE BARRICADE OR BARRICADES.

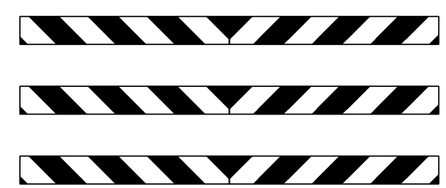

WHERE NO TURNS ARE PERMITTED, POSITION THE BARRICADES SO THE STRIPES SLOPE DOWNWARD IN BOTH DIRECTIONS TOWARDS THE CENTER OF THE BARRICADE OR BARRICADES.

GENERAL NOTES:

1. SEE THE MANUAL ON UNIFORM TRAFFIC CONTROL DEVICES (MUTCD) PART 6 FOR ADDITIONAL INFORMATION.

UNITS SHOWN IN BRACKETS [] ARE METRIC AND ARE IN MILLIMETERS (mm) UNLESS OTHER UNITS ARE SHOWN.

DETAILED DRAWING	
REFERENCE STANDARD SPEC. SECTION 618	DWG. NO. 618-03
BARRICADES	
EFFECTIVE: SEPTEMBER 2014	

MDT MONTANA DEPARTMENT OF TRANSPORTATION

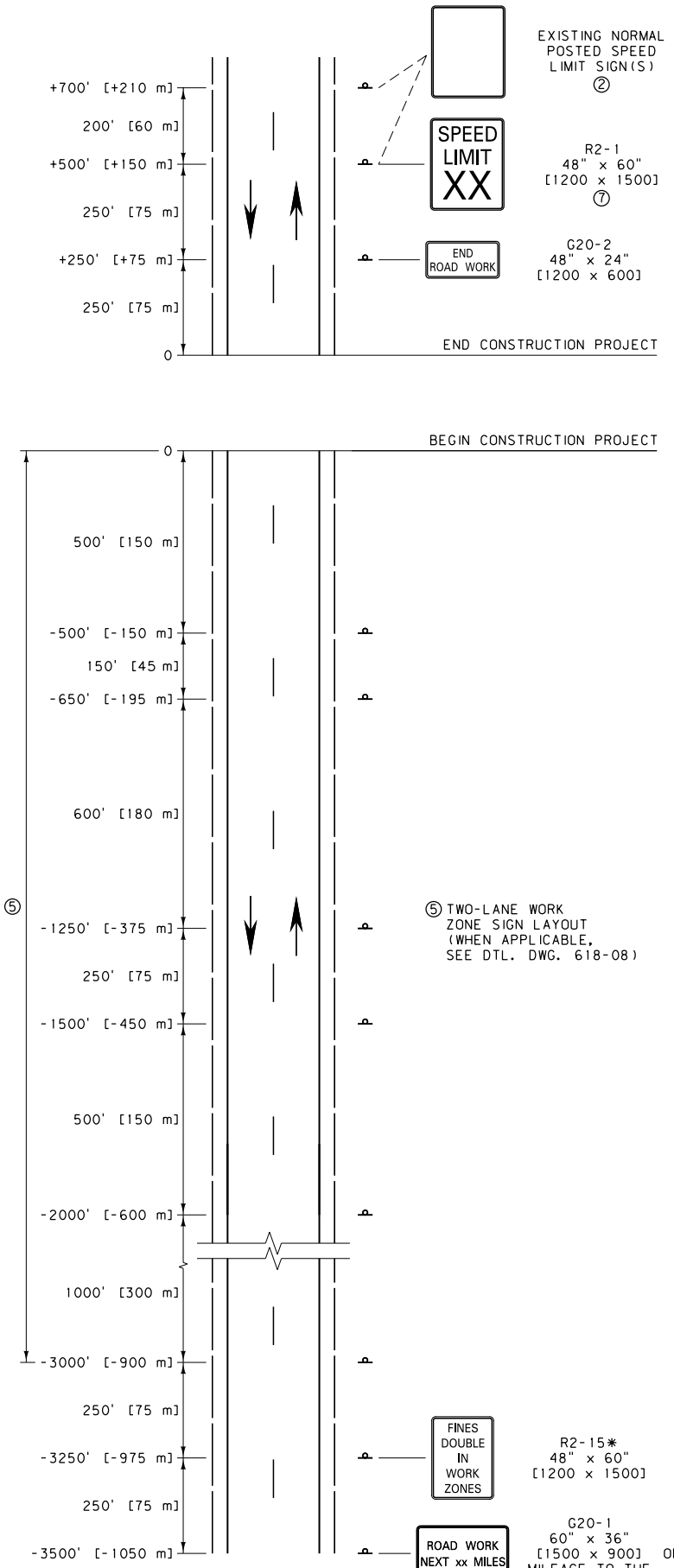

NOTES:

① THIS SIGN LAYOUT IS INTENDED TO BE A PERMANENT INSTALLATION FOR THE DURATION OF THE CONSTRUCTION PROJECT, AS APPROVED BY THE PROJECT MANAGER. COVER OR REMOVE ANY SIGNS WHEN NOT IN USE, INCLUDING SPEED LIMIT SIGNS NOT WARRANTED. REMOVE ANY SIGN SUPPORTS IF THEY WILL NOT BE NEEDED WITHIN 90 DAYS.

② POST THE END OF CONSTRUCTION PROJECT SPEED LIMIT CONSISTING OF ONE SIGN WHEN THE NORMAL POSTED SPEED LIMIT FOR ALL VEHICLES IS THE SAME. USE TWO SIGNS WHEN CAR, TRUCK AND NIGHTTIME SPEED LIMITS ARE DIFFERENT.

③ INCLUDE REGULATORY SIGNING ONLY IF THE CONSTRUCTION PROJECT CONTAINS A WORK ZONE OR HAS ROADWAY CONDITIONS THAT WARRANT SPEED RESTRICTIONS. MODIFY REGULATORY SIGNS TO MATCH ADJACENT REGULATIONS.

④ THE WORK ZONE REFERS TO THE AREA WITHIN THE CONSTRUCTION PROJECT WHERE WORK IS ACTUALLY TAKING PLACE.

⑤ IN ADDITION TO THE SIGNS SHOWN, INCLUDE THE APPROPRIATE TWO-LANE WORK ZONE SIGNS (DTL. DWG. NO. 618-08) WHEN A WORK ZONE IS LOCATED AT THE BEGINNING OR END OF THE CONSTRUCTION PROJECT.

⑥ SET UP THIS SIGN LAYOUT IN EACH TRAFFIC DIRECTION.

⑦ POST THE END OF WORK ZONE SPEED LIMIT APPROPRIATE FOR ALL VEHICLES FOR THE REMAINDER OF THE CONSTRUCTION PROJECT BEFORE RESUMING TO NORMAL POSTED SPEED LIMITS AT THE END OF THE CONSTRUCTION PROJECT.

* DENOTES SIGNS THAT ARE UNIQUE TO MONTANA.

UNITS SHOWN IN BRACKETS [] ARE METRIC AND ARE IN MILLIMETERS (mm) UNLESS OTHER UNITS ARE SHOWN.

DETAILED DRAWING	
REFERENCE STANDARD SPEC. SECTION **618**	DWG. NO. 618-04
TWO-LANE CONSTRUCTION PROJECT	
EFFECTIVE: SEPTEMBER 2014	
MDT MONTANA DEPARTMENT OF TRANSPORTATION	

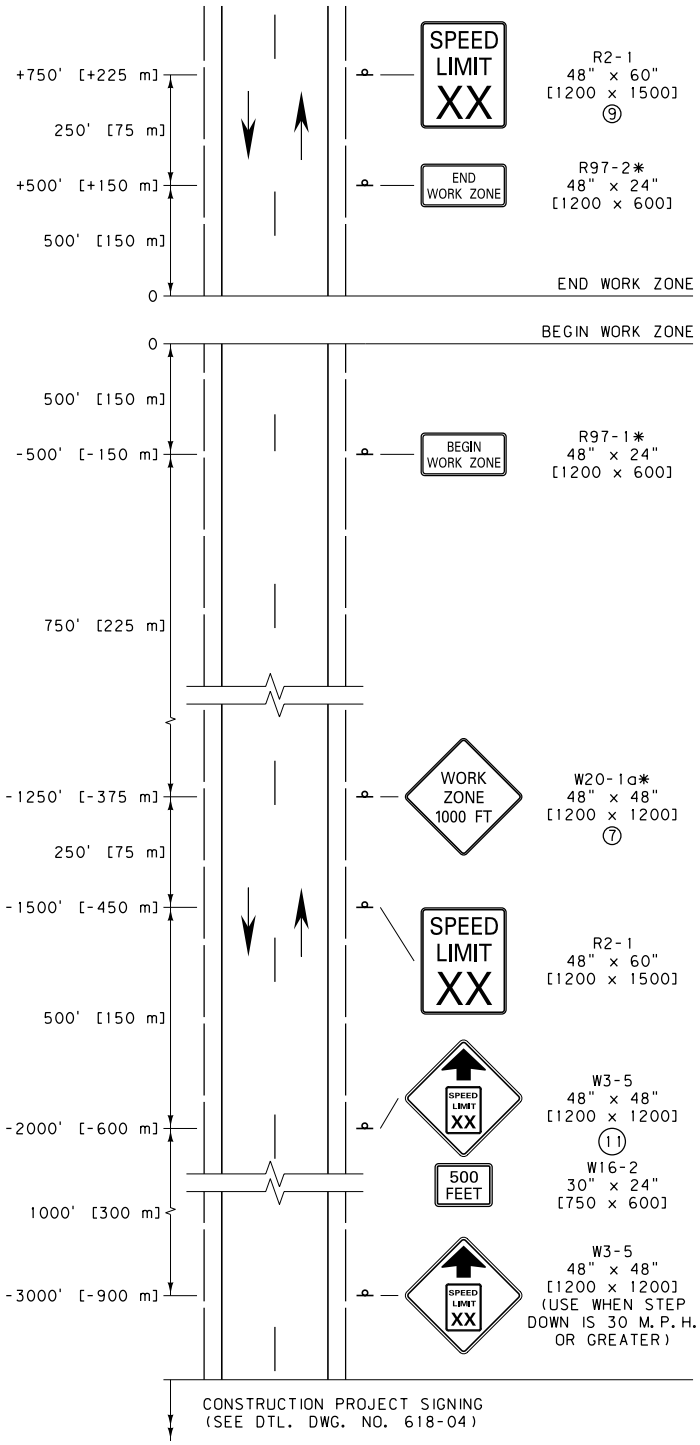

WORK ZONE WITH NO FLAGGER

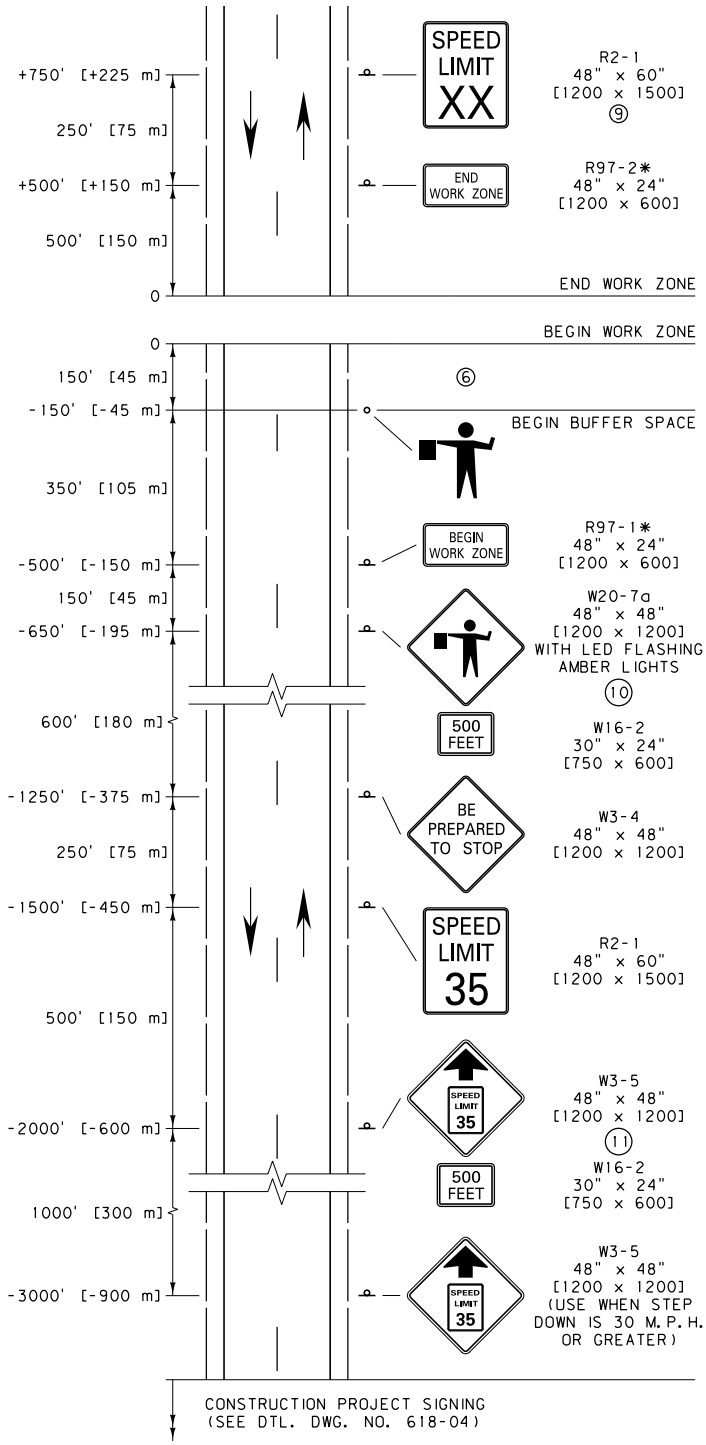

WORK ZONE WITH FLAGGER

NOTES:

1. THESE SIGN LAYOUTS ALSO WORK IN CONJUNCTION WITH THE PERMANENT LAYOUT ILLUSTRATED ON DTL. DWG. NO. 618-04 FOR WORK ZONES LOCATED AT THE BEGIN AND END OF THE CONSTRUCTION PROJECT.
2. XX = SPEED DETERMINED BY THE PROJECT MANAGER
3. INCLUDE REGULATORY SIGNING ONLY IF THERE IS REASON TO RESTRICT SPEED WITHIN THE WORK ZONE. REMOVE OR COVER EXISTING REGULATORY SIGNS TO MATCH ADJACENT REGULATIONS.
4. SET UP THIS SIGN LAYOUT IN EACH TRAFFIC DIRECTION. COMBINE SUCCESSIVE WORK ZONES WHEN LESS THAN 1.0 MILE [1.6 km] APART.
5. THE WORK ZONE REFERS TO THE AREA WITHIN THE CONSTRUCTION PROJECT WHERE WORK IS ACTUALLY TAKING PLACE.
6. THE BUFFER SPACE MAY BE INCREASED FOR DOWNGRADES AND OTHER CONDITIONS THAT AFFECT STOPPING DISTANCE.
7. USE MORE SPECIFIC SIGNS, WHERE APPLICABLE, SUCH AS W8-3 "PAVEMENT ENDS."
8. PROVIDE A SECOND FLAGGER WHEN REQUIRED PER SECTION 618.
9. POST THE END OF WORK ZONE SPEED LIMIT APPROPRIATE FOR ALL VEHICLES FOR THE REMAINDER OF THE CONSTRUCTION PROJECT BEFORE RESUMING TO NORMAL POSTED SPEED LIMITS AT THE END OF THE CONSTRUCTION PROJECT.
10. ENSURE THE AMBER LED FLASHERS MEET REQUIREMENTS OF STANDARD SPECIFICATION 715 AND DTL. DWG. NO. 618-01.
11. INCLUDE THESE SIGNS WITH ALL FLAGGERS. INCLUDE THESE SIGNS WITHIN CONSTRUCTION ZONES WHEN STEP DOWN IS 20 M.P.H. OR GREATER.

* DENOTES SIGNS THAT ARE UNIQUE TO MONTANA.

UNITS SHOWN IN BRACKETS [] ARE METRIC AND ARE IN MILLIMETERS (mm) UNLESS OTHER UNITS ARE SHOWN.

DETAILED DRAWING	
REFERENCE STANDARD SPEC. SECTION 618, 715	DWG. NO. 618-08
TWO-LANE CONSTRUCTION PROJECT WORK ZONES	
EFFECTIVE: SEPTEMBER 2014	
MDT MONTANA DEPARTMENT OF TRANSPORTATION	

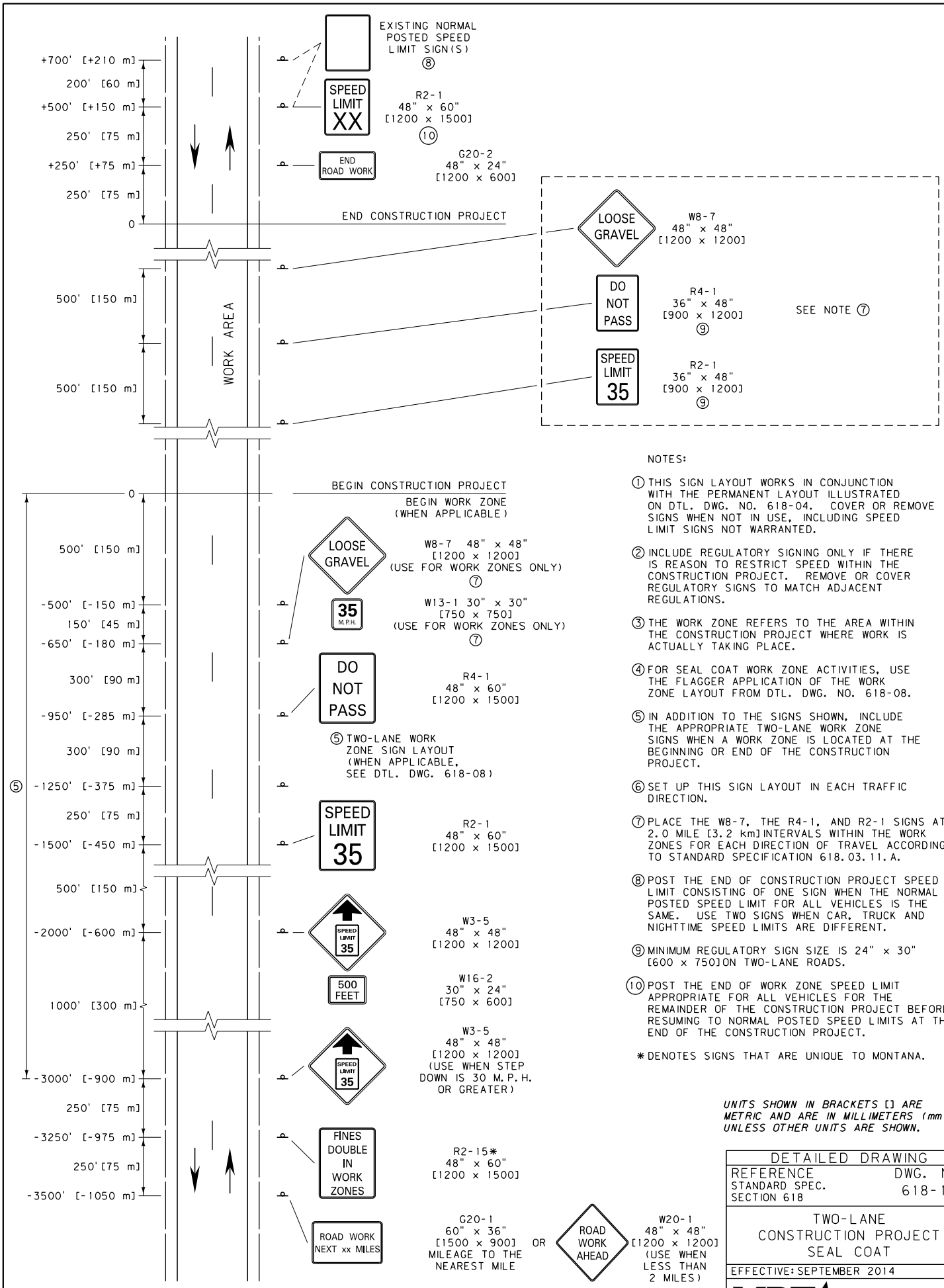

NOTES:

① THIS SIGN LAYOUT WORKS IN CONJUNCTION WITH THE PERMANENT LAYOUT ILLUSTRATED ON DTL. DWG. NO. 618-04. COVER OR REMOVE SIGNS WHEN NOT IN USE, INCLUDING SPEED LIMIT SIGNS NOT WARRANTED.

② INCLUDE REGULATORY SIGNING ONLY IF THERE IS REASON TO RESTRICT SPEED WITHIN THE CONSTRUCTION PROJECT. REMOVE OR COVER REGULATORY SIGNS TO MATCH ADJACENT REGULATIONS.

③ THE WORK ZONE REFERS TO THE AREA WITHIN THE CONSTRUCTION PROJECT WHERE WORK IS ACTUALLY TAKING PLACE.

④ FOR SEAL COAT WORK ZONE ACTIVITIES, USE THE FLAGGER APPLICATION OF THE WORK ZONE LAYOUT FROM DTL. DWG. NO. 618-08.

⑤ IN ADDITION TO THE SIGNS SHOWN, INCLUDE THE APPROPRIATE TWO-LANE WORK ZONE SIGNS WHEN A WORK ZONE IS LOCATED AT THE BEGINNING OR END OF THE CONSTRUCTION PROJECT.

⑥ SET UP THIS SIGN LAYOUT IN EACH TRAFFIC DIRECTION.

⑦ PLACE THE W8-7, THE R4-1, AND R2-1 SIGNS AT 2.0 MILE [3.2 km] INTERVALS WITHIN THE WORK ZONES FOR EACH DIRECTION OF TRAVEL ACCORDING TO STANDARD SPECIFICATION 618.03.11.A.

⑧ POST THE END OF CONSTRUCTION PROJECT SPEED LIMIT CONSISTING OF ONE SIGN WHEN THE NORMAL POSTED SPEED LIMIT FOR ALL VEHICLES IS THE SAME. USE TWO SIGNS WHEN CAR, TRUCK AND NIGHTTIME SPEED LIMITS ARE DIFFERENT.

⑨ MINIMUM REGULATORY SIGN SIZE IS 24" x 30" [600 x 750] ON TWO-LANE ROADS.

⑩ POST THE END OF WORK ZONE SPEED LIMIT APPROPRIATE FOR ALL VEHICLES FOR THE REMAINDER OF THE CONSTRUCTION PROJECT BEFORE RESUMING TO NORMAL POSTED SPEED LIMITS AT THE END OF THE CONSTRUCTION PROJECT.

* DENOTES SIGNS THAT ARE UNIQUE TO MONTANA.

UNITS SHOWN IN BRACKETS [] ARE METRIC AND ARE IN MILLIMETERS (mm) UNLESS OTHER UNITS ARE SHOWN.

DETAILED DRAWING	
REFERENCE STANDARD SPEC. SECTION 618	DWG. NO. 618-10
TWO-LANE CONSTRUCTION PROJECT SEAL COAT	
EFFECTIVE: SEPTEMBER 2014	

MDT MONTANA DEPARTMENT OF TRANSPORTATION

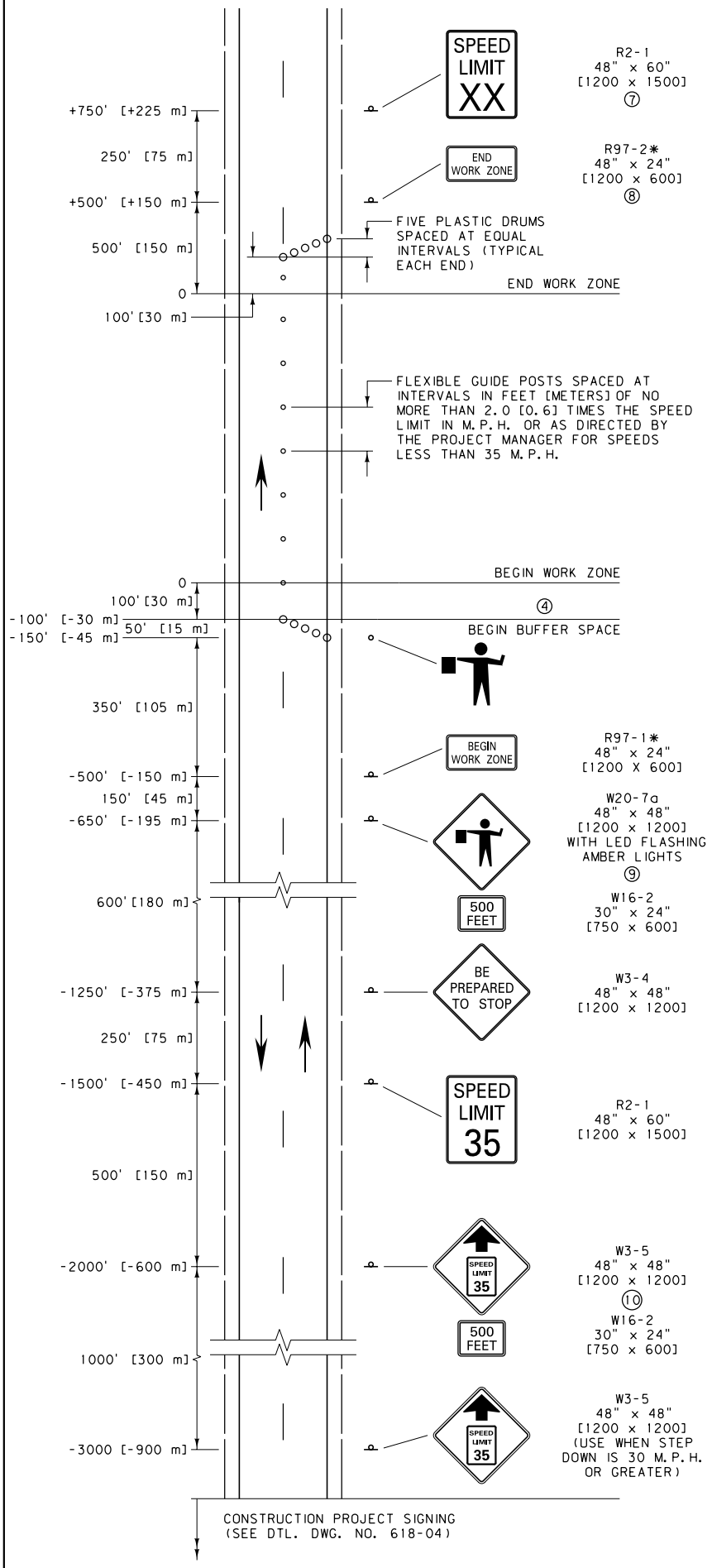

NOTES:

① MODIFY REGULATORY SIGNS TO MATCH ADJACENT REGULATIONS.

② SET UP THIS SIGN LAYOUT IN EACH TRAFFIC DIRECTION.

③ THE WORK ZONE REFERS TO THE AREA WITHIN THE CONSTRUCTION PROJECT WHERE WORK IS ACTUALLY TAKING PLACE.

④ THE BUFFER SPACE MAY BE INCREASED FOR DOWNGRADES AND OTHER CONDITIONS THAT AFFECT STOPPING DISTANCE.

⑤ PROVIDE A SECOND FLAGGER WHEN REQUIRED BY SECTION 618.03.14.

⑥ XX = SPEED DETERMINED BY THE PROJECT MANAGER.

⑦ POST THE END OF WORK ZONE SPEED LIMIT APPROPRIATE FOR ALL VEHICLES FOR THE REMAINDER OF THE CONSTRUCTION PROJECT BEFORE RESUMING TO NORMAL POSTED SPEED LIMITS AT THE END OF THE CONSTRUCTION PROJECT.

⑧ PROJECT MANAGER MAY PLACE R97-2 UP TO 500' [150 m] FROM END OF WORK ZONE IF CONDITIONS WARRANT.

⑨ ENSURE THE AMBER LED FLASHERS MEET REQUIREMENTS OF STANDARD SPECIFICATION 715 AND DTL. DWG. NO. 618-01.

⑩ INCLUDE THESE SIGNS WITH ALL FLAGGERS. INCLUDE THESE SIGNS WITHIN CONSTRUCTION ZONES WHEN STEP DOWN IS 20 M.P.H. OR GREATER.

✱ DENOTES SIGNS THAT ARE UNIQUE TO MONTANA.

UNITS SHOWN IN BRACKETS [] ARE METRIC AND ARE IN MILLIMETERS (mm) UNLESS OTHER UNITS ARE SHOWN.

DETAILED DRAWING	
REFERENCE STANDARD SPEC. SECTION 618, 715	DWG. NO. 618-12
TWO-LANE CONSTRUCTION PROJECT LANE CLOSURE-FLAGGER CONTROLLED	
EFFECTIVE: SEPTEMBER 2014	
MDT MONTANA DEPARTMENT OF TRANSPORTATION	

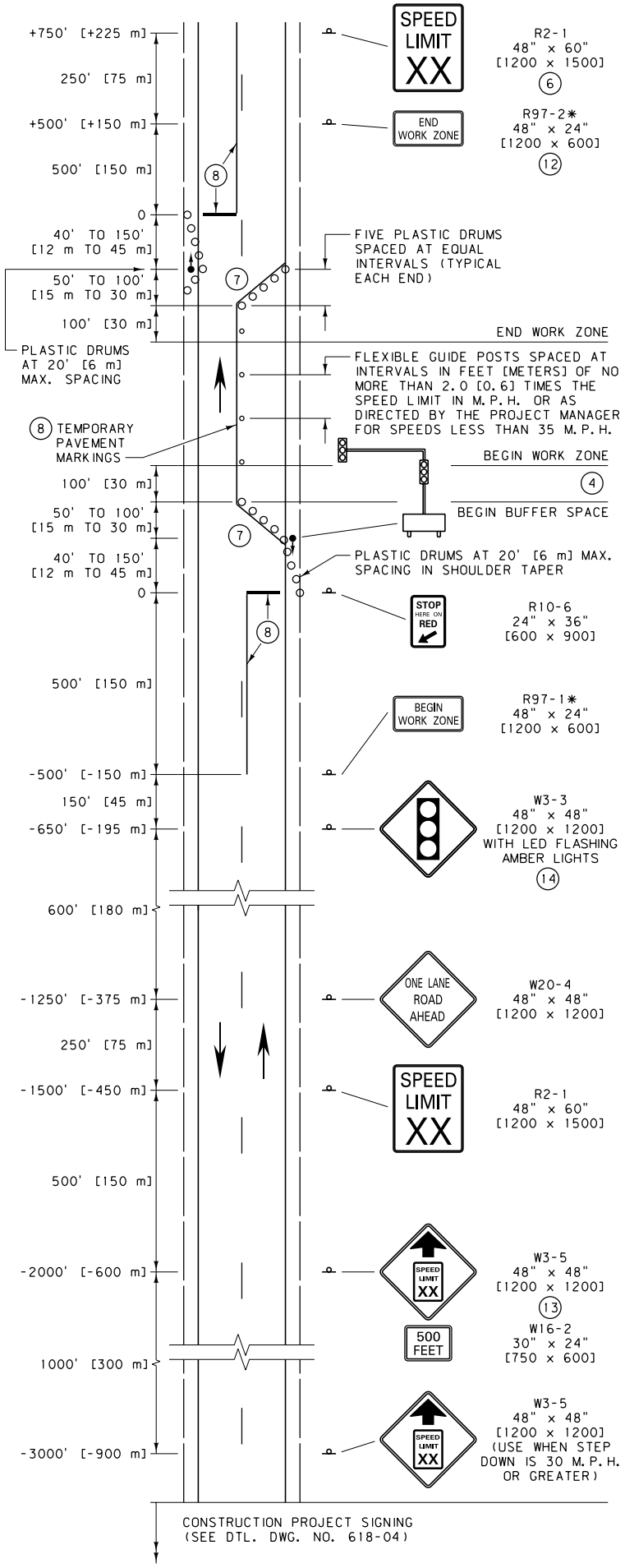

NOTES:

1. MODIFY REGULATORY SIGNS TO MATCH ADJACENT REGULATIONS.
2. SET UP THIS SIGN LAYOUT IN EACH TRAFFIC DIRECTION.
3. THE WORK ZONE REFERS TO THE AREA WITHIN THE CONSTRUCTION PROJECT WHERE WORK IS ACTUALLY TAKING PLACE.
4. THE BUFFER SPACE MAY BE INCREASED FOR DOWNGRADES AND OTHER CONDITIONS THAT AFFECT STOPPING DISTANCE.
5. XX = SPEED DETERMINED BY THE PROJECT MANAGER.
6. POST THE END OF WORK ZONE SPEED LIMIT APPROPRIATE FOR ALL VEHICLES FOR THE REMAINDER OF THE CONSTRUCTION PROJECT BEFORE RESUMING TO NORMAL POSTED SPEED LIMITS AT THE END OF THE CONSTRUCTION PROJECT.
7. REMOVE ANY CONFLICTING PAVEMENT MARKINGS BETWEEN THE STOP LINE AND WORK ZONE BOUNDARY.
8. PLACE TEMPORARY PAVEMENT MARKINGS AS SHOWN WHEN ROADWAY SURFACE IS PAVED. (REMOVABLE PAVEMENT MARKINGS MAY BE USED.) UPON REMOVAL OF THE TEMPORARY TRAFFIC CONTROL SIGNALS, REMOVE ALL TEMPORARY PAVEMENT MARKINGS AND RESTORE PERMANENT OR INTERIM PAVEMENT MARKINGS.
9. TEMPORARY TRAFFIC CONTROL SIGNALS ARE TO MEET THE PHYSICAL DISPLAY AND OPERATIONAL REQUIREMENTS OF PERMANENT TRAFFIC CONTROL SIGNALS.
10. ESTABLISH TEMPORARY TRAFFIC CONTROL SIGNAL TIMING BY CONSULTING WITH AN AUTHORIZED TRAFFIC ENGINEER. ENSURE THAT THE DURATIONS OF RED CLEARANCE INTERVALS ARE ADEQUATE TO CLEAR THE ONE-LANE SECTION OF CONFLICTING VEHICLES. INCORPORATE SAFEGUARDS TO AVOID THE POSSIBILITY OF CONFLICTING SIGNAL INDICATIONS AT EACH END OF THE WORK ZONE.
11. INCORPORATE ANY SIDE APPROACH TRAFFIC THAT OCCURS WITHIN THE WORK ZONE BOUNDARIES INTO THE MAINLINE SIGNAL CONTROLLED OPERATION VIA. THE USE OF TEMPORARY TRAFFIC CONTROL SIGNS, DEVICES, ETC.
12. PROJECT MANAGER MAY PLACE R97-2 UP TO 500' [500 m] FROM END OF WORK ZONE IF CONDITIONS WARRANT.
13. INCLUDE THESE SIGNS WITH ALL FLAGGERS. INCLUDE THESE SIGNS WITHIN CONSTRUCTION ZONES WHEN STEP DOWN IS 20 M.P.H. OR GREATER.
14. INSURE THE AMBER LED FLASHERS MEET REQUIREMENTS OF STANDARD SPECIFICATION 715 AND DTL. DWG No. 618-01

* DENOTES SIGNS THAT ARE UNIQUE TO MONTANA.

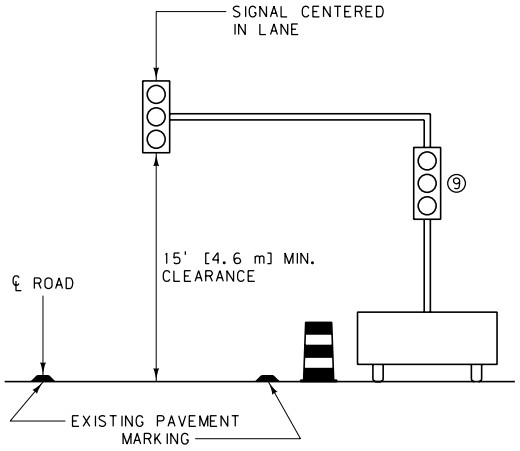

TEMPORARY TRAFFIC CONTROL SIGNAL DETAIL

UNITS SHOWN IN BRACKETS [] ARE METRIC AND ARE IN MILLIMETERS (mm) UNLESS OTHER UNITS ARE SHOWN.

DETAILED DRAWING	
REFERENCE STANDARD SPEC. SECTION 618	DWG. NO. 618-13
TWO-LANE CONSTRUCTION PROJECT LANE CLOSURE-SIGNAL CONTROLLED	
EFFECTIVE: SEPTEMBER 2014	
MDT MONTANA DEPARTMENT OF TRANSPORTATION	

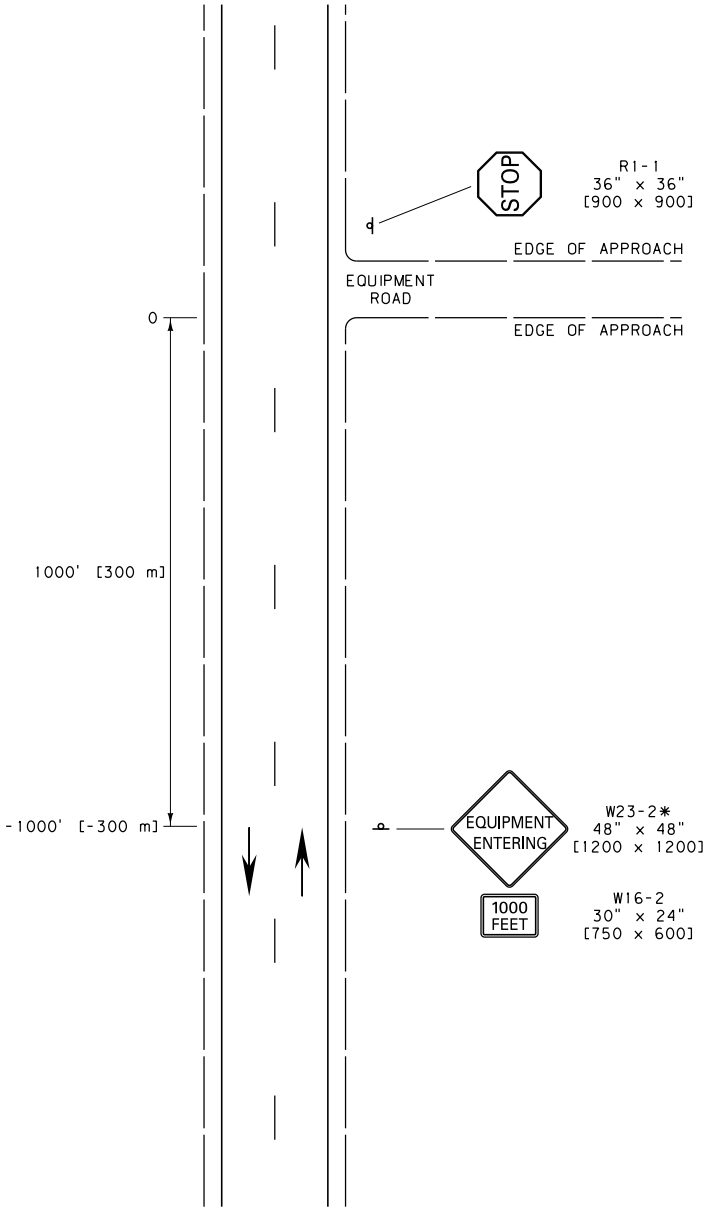

NOTES:

1. USE THIS SIGN LAYOUT WHEN APPROPRIATE. OTHERWISE REFER TO DTL. DWG. NO. 618-16 WHEN A FLAGGER IS NEEDED.
2. SET UP THIS SIGN LAYOUT IN EACH TRAFFIC DIRECTION, AS NEEDED.

* DENOTES SIGNS THAT ARE UNIQUE TO MONTANA.

UNITS SHOWN IN BRACKETS [] ARE METRIC AND ARE IN MILLIMETERS (mm) UNLESS OTHER UNITS ARE SHOWN.

DETAILED DRAWING	
REFERENCE STANDARD SPEC. SECTION 618	DWG. NO. 618-14
TWO-LANE EQUIPMENT ENTRANCES	
EFFECTIVE: SEPTEMBER 2014	
MDT MONTANA DEPARTMENT OF TRANSPORTATION	

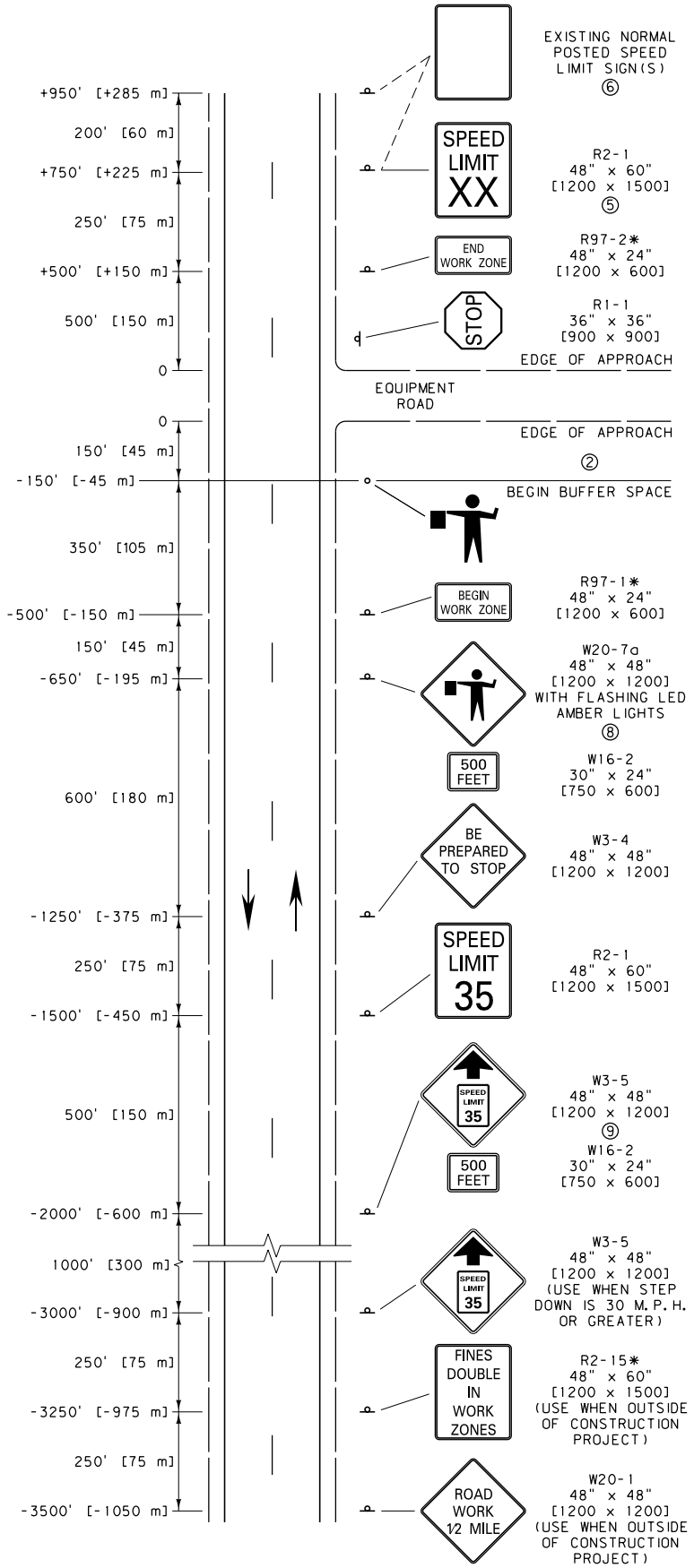

EQUIPMENT ENTRANCE WITH FLAGGER

NOTES:

① SET UP THIS SIGN LAYOUT IN EACH TRAFFIC DIRECTION, AS NEEDED.

② THE BUFFER SPACE MAY BE INCREASED FOR DOWNGRADES AND OTHER CONDITIONS THAT AFFECT STOPPING DISTANCE.

③ XX = SPEED DETERMINED BY THE PROJECT MANAGER.

④ THE WORK ZONE REFERS TO THE AREA WHERE WORK IS ACTUALLY TAKING PLACE. WHEN THIS OCCURS OUTSIDE OF A CONSTRUCTION PROJECT INCLUDE THE W20-1 AND R2-15* SIGNS.

⑤ POST THE END OF WORK ZONE SPEED LIMIT APPROPRIATE FOR ALL VEHICLES FOR THE REMAINDER OF THE CONSTRUCTION PROJECT BEFORE RESUMING TO NORMAL POSTED SPEED LIMITS AT THE END OF THE CONSTRUCTION PROJECT.

⑥ WHEN OUTSIDE OF A CONSTRUCTION PROJECT, POST THE SPEED LIMIT CONSISTING OF ONE SIGN WHEN THE NORMAL POSTED SPEED LIMIT FOR ALL VEHICLES IS THE SAME. USE TWO SIGNS WHEN CAR, TRUCK AND NIGHTTIME SPEED LIMITS ARE DIFFERENT.

⑦ PROJECT MANAGER MAY PLACE R97-2 UP TO 500' [150 m] FROM END OF WORK ZONE IF CONDITIONS WARRANT.

⑧ ENSURE THE AMBER LED FLASHERS MEET REQUIREMENTS OF SECTION 715 AND DTL. DWG. NO. 618-01.

⑨ INCLUDE THESE SIGNS WITH ALL FLAGGERS. INCLUDE THESE SIGNS WITHIN CONSTRUCTION ZONES WHEN STEP DOWN IS 20 M.P.H. OR GREATER.

* DENOTES SIGNS THAT ARE UNIQUE TO MONTANA.

UNITS SHOWN IN BRACKETS [] ARE METRIC AND ARE IN MILLIMETERS (mm) UNLESS OTHER UNITS ARE SHOWN.

DETAILED DRAWING	
REFERENCE STANDARD SPEC. SECTION 618, 715	DWG. NO. 618-16
TWO-LANE EQUIPMENT ENTRANCES	
EFFECTIVE: SEPTEMBER 2014	
MDT MONTANA DEPARTMENT OF TRANSPORTATION	

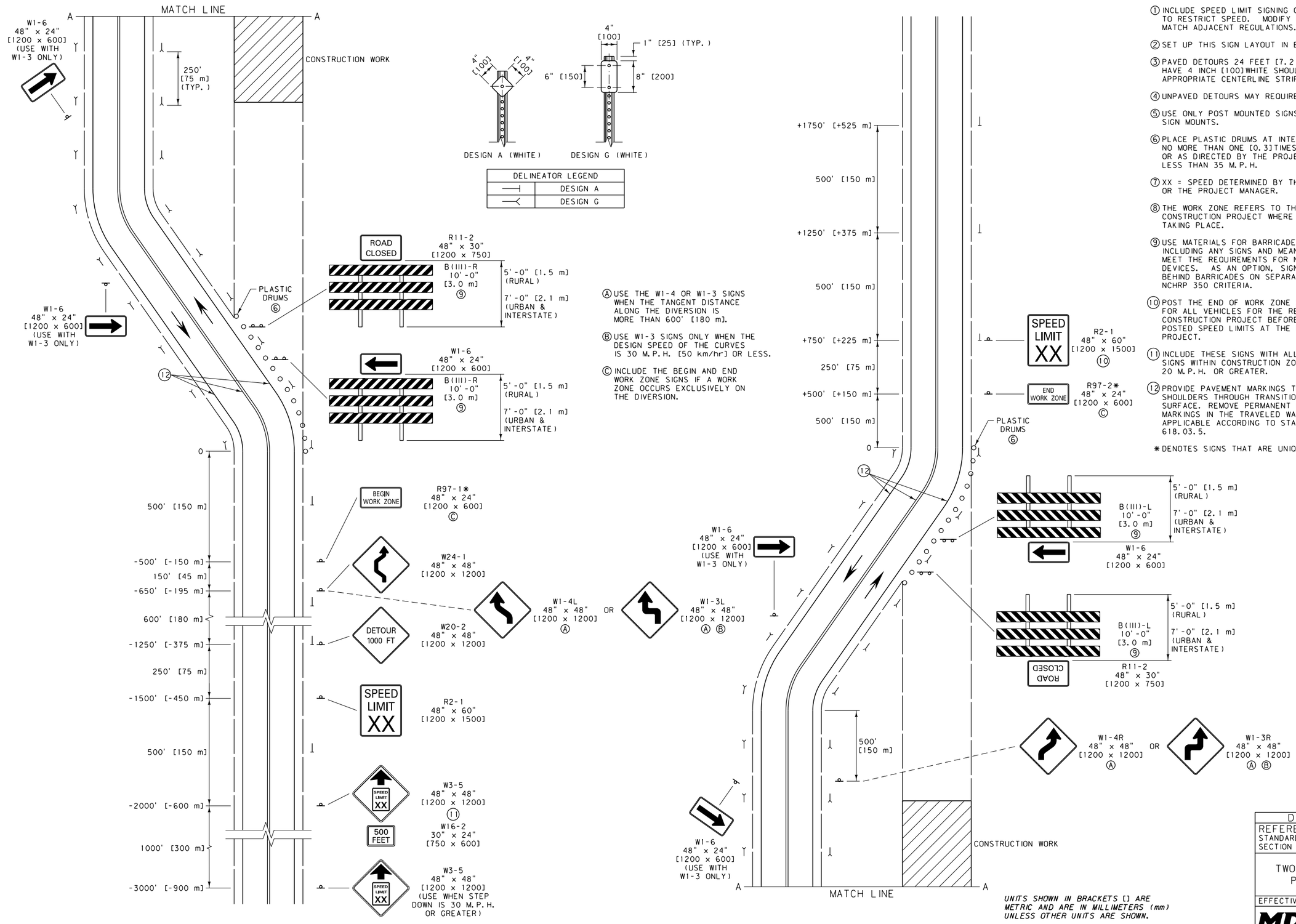

NOTES:

① INCLUDE SPEED LIMIT SIGNING ONLY IF THERE IS REASON TO RESTRICT SPEED. MODIFY REGULATORY SIGNS TO MATCH ADJACENT REGULATIONS.

② SET UP THIS SIGN LAYOUT IN EACH TRAFFIC DIRECTION.

③ PAVED DETOURS 24 FEET [7.2 m] WIDE OR GREATER HAVE 4 INCH [100] WHITE SHOULDER STRIPES AND APPROPRIATE CENTERLINE STRIPES.

④ UNPAVED DETOURS MAY REQUIRE ADDITIONAL DELINEATION.

⑤ USE ONLY POST MOUNTED SIGNS. DO NOT USE PORTABLE SIGN MOUNTS.

⑥ PLACE PLASTIC DRUMS AT INTERVALS IN FEET [METERS] OF NO MORE THAN ONE [0.3] TIMES THE SPEED LIMIT IN M.P.H. OR AS DIRECTED BY THE PROJECT MANAGER FOR SPEEDS LESS THAN 35 M.P.H.

⑦ XX = SPEED DETERMINED BY THE DETOUR DESIGN SPEED OR THE PROJECT MANAGER.

⑧ THE WORK ZONE REFERS TO THE AREA WITHIN THE CONSTRUCTION PROJECT WHERE WORK IS ACTUALLY TAKING PLACE.

⑨ USE MATERIALS FOR BARRICADE FRAMEWORK AND ASSEMBLY, INCLUDING ANY SIGNS AND MEANS OF ATTACHMENT. THAT MEET THE REQUIREMENTS FOR NCHRP 350 FOR WORK ZONE DEVICES. AS AN OPTION, SIGNS MAY BE MOUNTED DIRECTLY BEHIND BARRICADES ON SEPARATE SIGN SUPPORTS MEETING NCHRP 350 CRITERIA.

⑩ POST THE END OF WORK ZONE SPEED LIMIT APPROPRIATE FOR ALL VEHICLES FOR THE REMAINDER OF THE CONSTRUCTION PROJECT BEFORE RESUMING TO NORMAL POSTED SPEED LIMITS AT THE END OF THE CONSTRUCTION PROJECT.

⑪ INCLUDE THESE SIGNS WITH ALL FLAGGERS. INCLUDE THESE SIGNS WITHIN CONSTRUCTION ZONES WHEN STEP DOWN IS 20 M.P.H. OR GREATER.

⑫ PROVIDE PAVEMENT MARKINGS TO DELINEATE CENTERLINE AND SHOULDERS THROUGH TRANSITION FROM PAVED TO GRAVELED SURFACE. REMOVE PERMANENT PAVEMENT MARKINGS IN THE TRAVELED WAY THAT ARE NO LONGER APPLICABLE ACCORDING TO STANDARD SPECIFICATION 618.03.5.

* DENOTES SIGNS THAT ARE UNIQUE TO MONTANA.

UNITS SHOWN IN BRACKETS [] ARE METRIC AND ARE IN MILLIMETERS (mm) UNLESS OTHER UNITS ARE SHOWN.

DETAILED DRAWING	
REFERENCE STANDARD SPEC. SECTION 618	DWG. NO. 618-18
TWO-LANE CONSTRUCTION PROJECT DIVERSION	
EFFECTIVE: SEPTEMBER 2014	

MDT MONTANA DEPARTMENT OF TRANSPORTATION

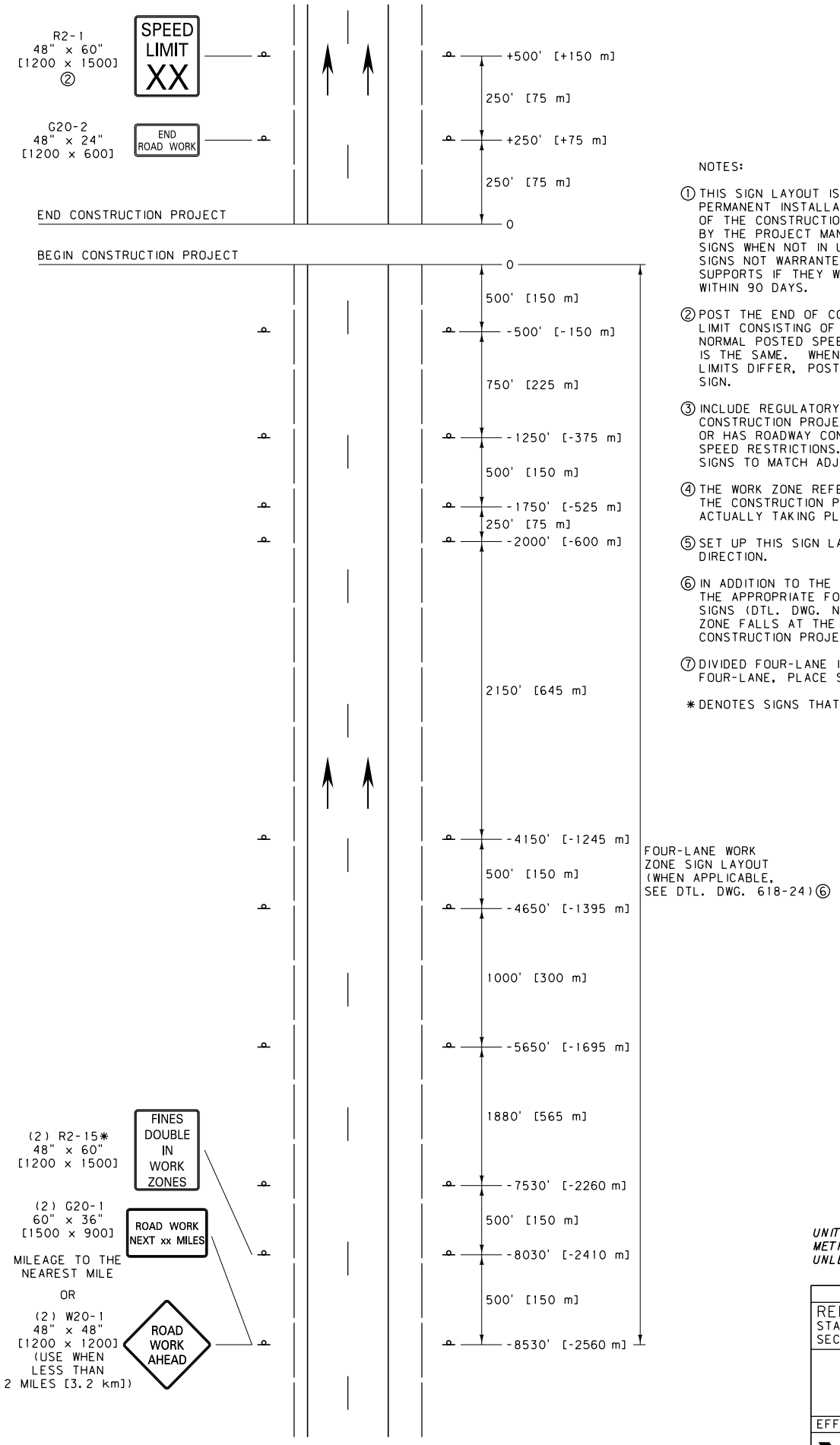

NOTES:

① THIS SIGN LAYOUT IS INTENDED TO BE A PERMANENT INSTALLATION FOR THE DURATION OF THE CONSTRUCTION PROJECT, AS APPROVED BY THE PROJECT MANAGER. COVER OR REMOVE SIGNS WHEN NOT IN USE, INCLUDING SPEED LIMIT SIGNS NOT WARRANTED. REMOVE ANY SIGN SUPPORTS IF THEY WILL NOT BE NEEDED WITHIN 90 DAYS.

② POST THE END OF CONSTRUCTION PROJECT SPEED LIMIT CONSISTING OF ONE LIMIT WHEN THE NORMAL POSTED SPEED LIMIT FOR ALL VEHICLES IS THE SAME. WHEN CAR AND TRUCK SPEED LIMITS DIFFER, POST BOTH LIMITS ON A SINGLE SIGN.

③ INCLUDE REGULATORY SIGNING ONLY IF THE CONSTRUCTION PROJECT CONTAINS A WORK ZONE OR HAS ROADWAY CONDITIONS THAT WARRANT SPEED RESTRICTIONS. MODIFY REGULATORY SIGNS TO MATCH ADJACENT REGULATIONS.

④ THE WORK ZONE REFERS TO THE AREA WITHIN THE CONSTRUCTION PROJECT WHERE WORK IS ACTUALLY TAKING PLACE.

⑤ SET UP THIS SIGN LAYOUT IN EACH TRAFFIC DIRECTION.

⑥ IN ADDITION TO THE SIGNS SHOWN, INCLUDE THE APPROPRIATE FOUR-LANE WORK ZONE SIGNS (DTL. DWG. NO. 618-24) WHEN A WORK ZONE FALLS AT THE BEGIN OR END OF THE CONSTRUCTION PROJECT.

⑦ DIVIDED FOUR-LANE IS SHOWN. FOR UN-DIVIDED FOUR-LANE, PLACE SIGNS ON RIGHT SIDE ONLY.

* DENOTES SIGNS THAT ARE UNIQUE TO MONTANA.

UNITS SHOWN IN BRACKETS [] ARE METRIC AND ARE IN MILLIMETERS (mm) UNLESS OTHER UNITS ARE SHOWN.

DETAILED DRAWING	
REFERENCE STANDARD SPEC. SECTION 618	DWG. NO. 618-20
DIVIDED FOUR-LANE CONSTRUCTION PROJECT	
EFFECTIVE: SEPTEMBER 2014	
MDT MONTANA DEPARTMENT OF TRANSPORTATION	

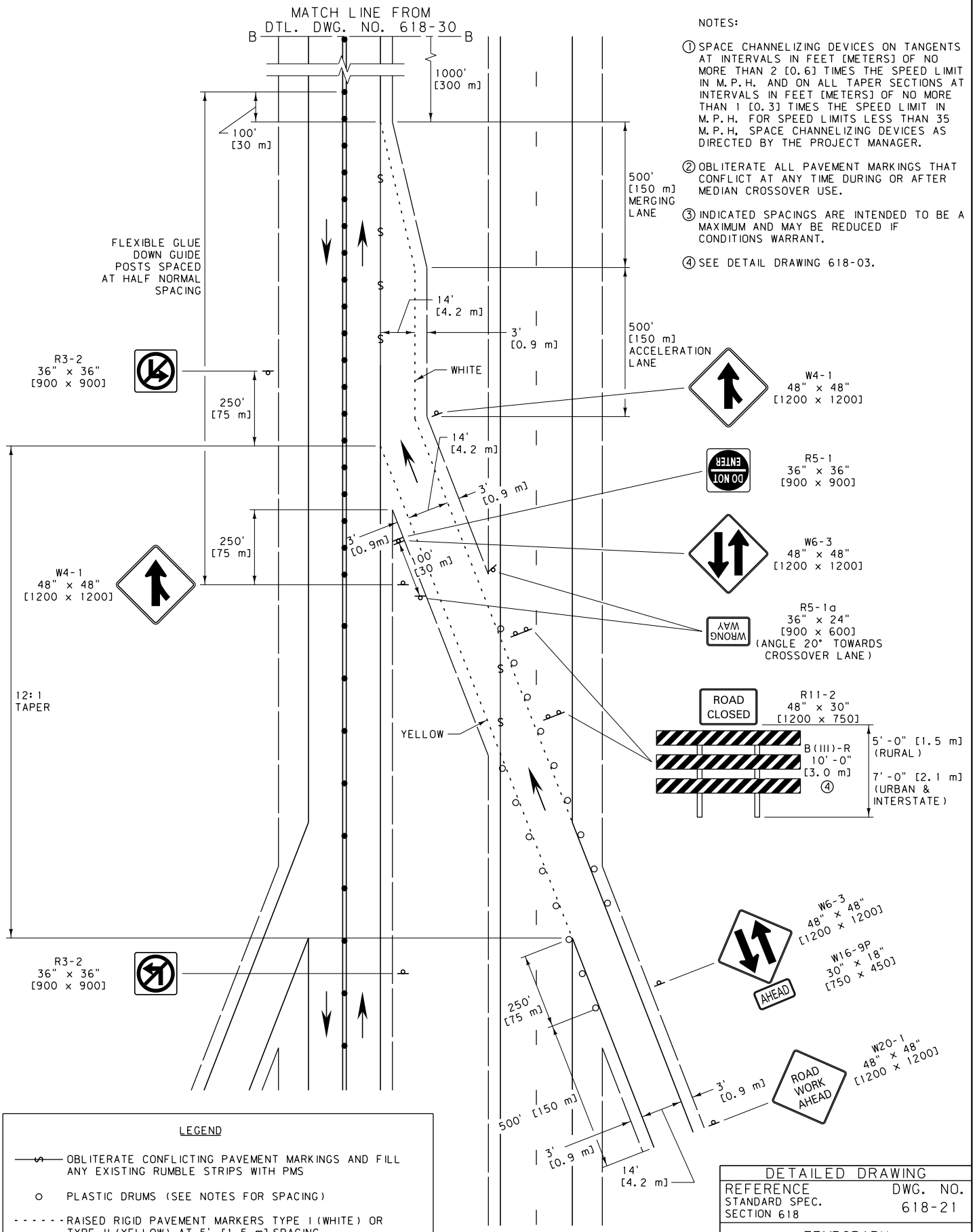

NOTES:

1. SPACE CHANNELIZING DEVICES ON TANGENTS AT INTERVALS IN FEET [METERS] OF NO MORE THAN 2 [0.6] TIMES THE SPEED LIMIT IN M.P.H. AND ON ALL TAPER SECTIONS AT INTERVALS IN FEET [METERS] OF NO MORE THAN 1 [0.3] TIMES THE SPEED LIMIT IN M.P.H. FOR SPEED LIMITS LESS THAN 35 M.P.H, SPACE CHANNELIZING DEVICES AS DIRECTED BY THE PROJECT MANAGER.
2. OBLITERATE ALL PAVEMENT MARKINGS THAT CONFLICT AT ANY TIME DURING OR AFTER MEDIAN CROSSOVER USE.
3. INDICATED SPACINGS ARE INTENDED TO BE A MAXIMUM AND MAY BE REDUCED IF CONDITIONS WARRANT.
4. SEE DETAIL DRAWING 618-03.

LEGEND

- OBLITERATE CONFLICTING PAVEMENT MARKINGS AND FILL ANY EXISTING RUMBLE STRIPS WITH PMS
- PLASTIC DRUMS (SEE NOTES FOR SPACING)
- RAISED RIGID PAVEMENT MARKERS TYPE I (WHITE) OR TYPE II (YELLOW) AT 5' [1.5 m] SPACING
- DOUBLE YELLOW PAINT OR DOUBLE PLASTIC PAVEMENT MARKING TABS AT 5' [1.5 m] SPACING
- FLEXIBLE GLUE-DOWN GUIDE POSTS ON TWO-LANE (SEE NOTES FOR SPACING EXCEPT AS SHOWN)

UNITS SHOWN IN BRACKETS [] ARE METRIC AND ARE IN MILLIMETERS (mm) UNLESS OTHER UNITS ARE SHOWN.

DETAILED DRAWING

REFERENCE STANDARD SPEC. SECTION 618

DWG. NO. 618-21

TEMPORARY ENTRANCE RAMP MEDIAN CROSSOVER

EFFECTIVE: SEPTEMBER 2014

MDT MONTANA DEPARTMENT OF TRANSPORTATION

LEGEND

- OBLITERATE CONFLICTING PAVEMENT MARKINGS AND FILL ANY EXISTING RUMBLE STRIPS WITH PMS
- PLASTIC DRUMS (SEE NOTES FOR SPACING)
- RAISED RIGID PAVEMENT MARKERS TYPE I (WHITE) OR TYPE II (YELLOW) AT 5' [1.5 m] SPACING
- DOUBLE YELLOW PAINT OR DOUBLE PLASTIC PAVEMENT MARKING TABS AT 5' [1.5 m] SPACING
- FLEXIBLE GLUE-DOWN GUIDE POSTS ON TWO-LANE (SEE NOTES FOR SPACING EXCEPT AS SHOWN)

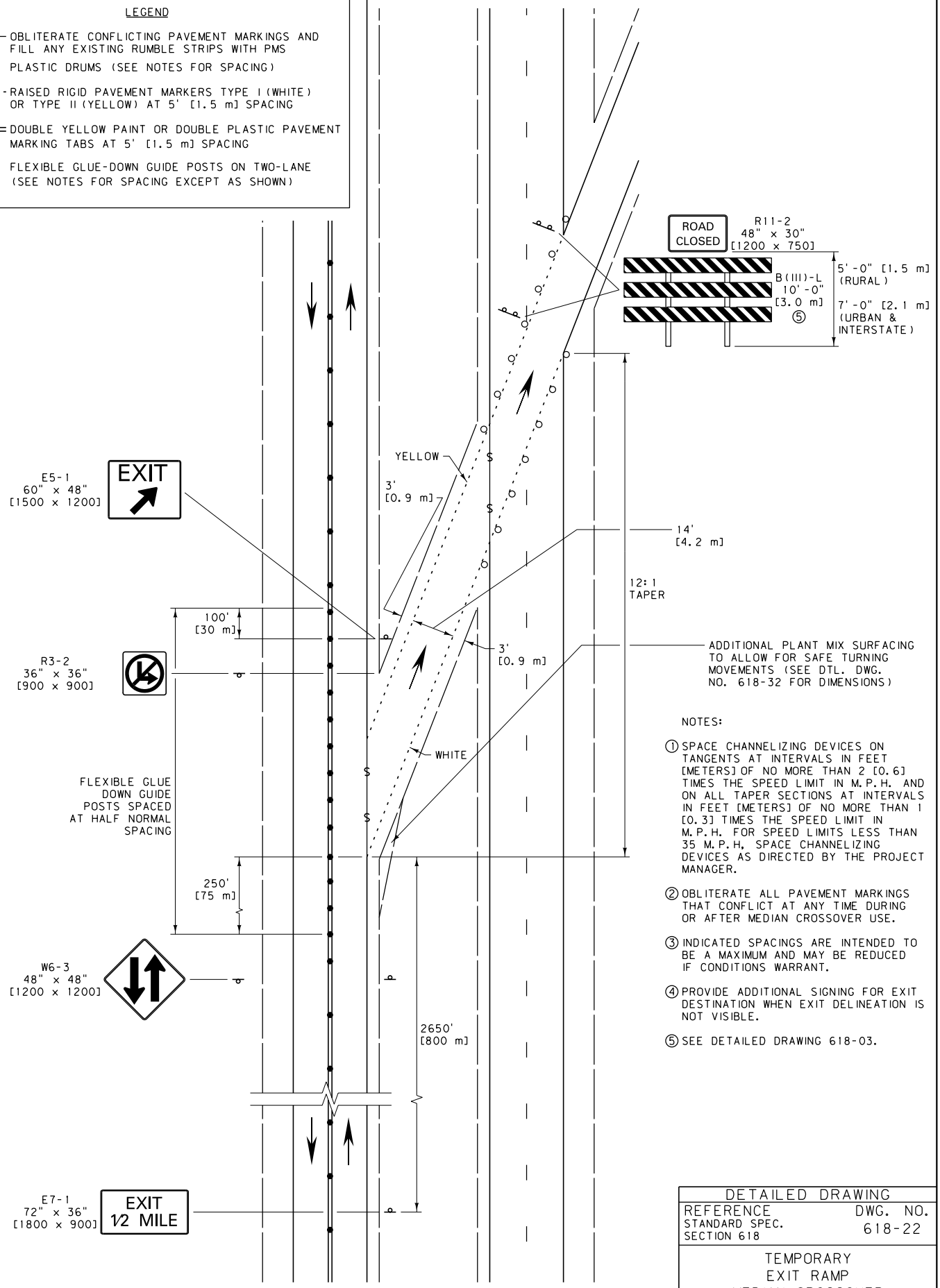

NOTES:

1. SPACE CHANNELIZING DEVICES ON TANGENTS AT INTERVALS IN FEET [METERS] OF NO MORE THAN 2 [0.6] TIMES THE SPEED LIMIT IN M.P.H. AND ON ALL TAPER SECTIONS AT INTERVALS IN FEET [METERS] OF NO MORE THAN 1 [0.3] TIMES THE SPEED LIMIT IN M.P.H. FOR SPEED LIMITS LESS THAN 35 M.P.H, SPACE CHANNELIZING DEVICES AS DIRECTED BY THE PROJECT MANAGER.
2. OBLITERATE ALL PAVEMENT MARKINGS THAT CONFLICT AT ANY TIME DURING OR AFTER MEDIAN CROSSOVER USE.
3. INDICATED SPACINGS ARE INTENDED TO BE A MAXIMUM AND MAY BE REDUCED IF CONDITIONS WARRANT.
4. PROVIDE ADDITIONAL SIGNING FOR EXIT DESTINATION WHEN EXIT DELINEATION IS NOT VISIBLE.
5. SEE DETAILED DRAWING 618-03.

UNITS SHOWN IN BRACKETS [] ARE METRIC AND ARE IN MILLIMETERS (mm) UNLESS OTHER UNITS ARE SHOWN.

DETAILED DRAWING	
REFERENCE STANDARD SPEC. SECTION 618	DWG. NO. 618-22
TEMPORARY EXIT RAMP MEDIAN CROSSOVER	
EFFECTIVE: SEPTEMBER 2014	
MDT MONTANA DEPARTMENT OF TRANSPORTATION	

NOTE:

THIS SEQUENCE OF SIGNS IS IDENTICAL FOR BOTH WORK ZONES SHOWN ON THIS DETAIL.

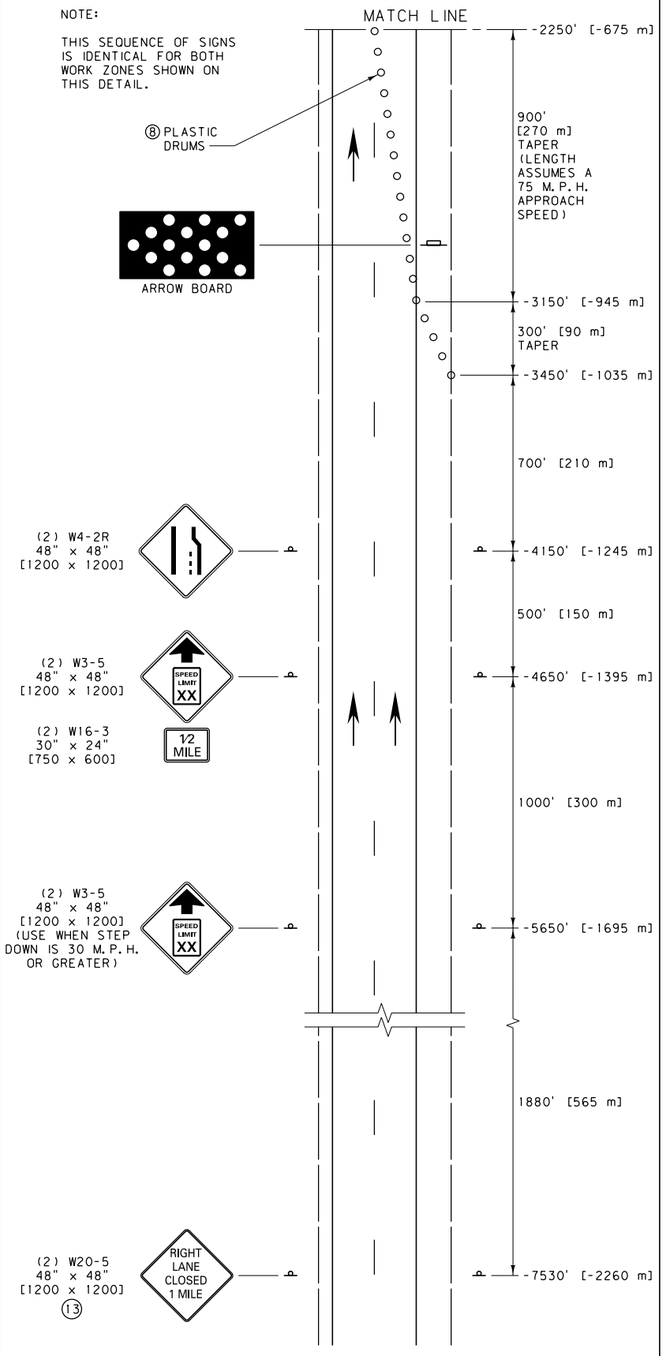

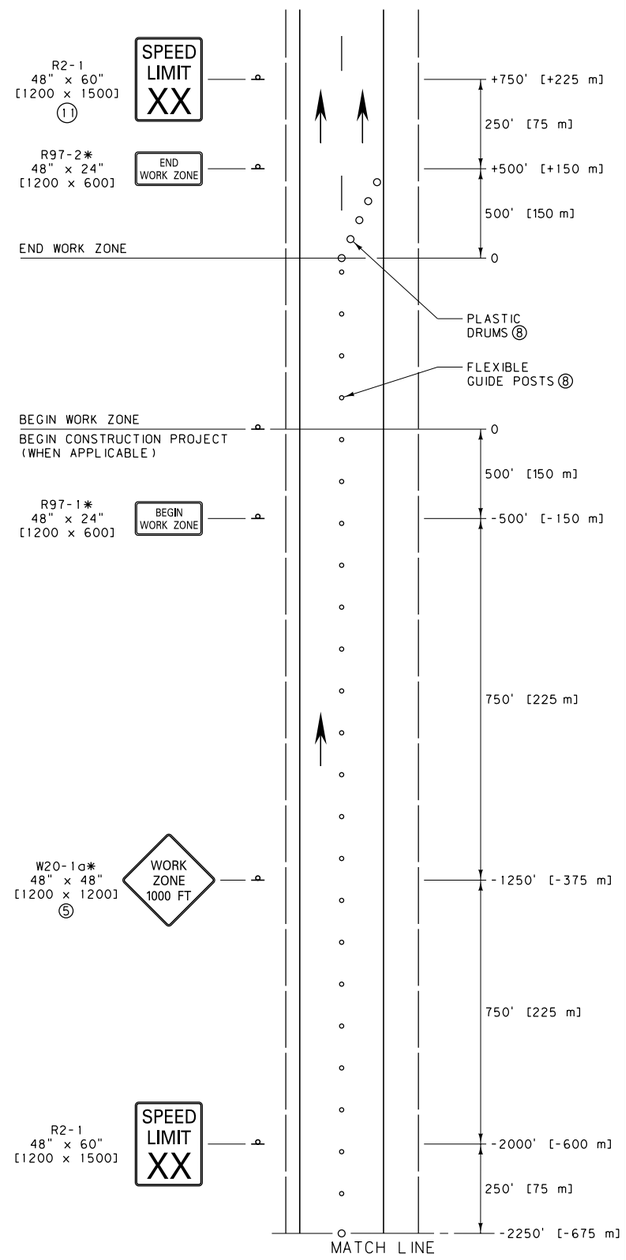

WORK ZONE WITH NO FLAGGER

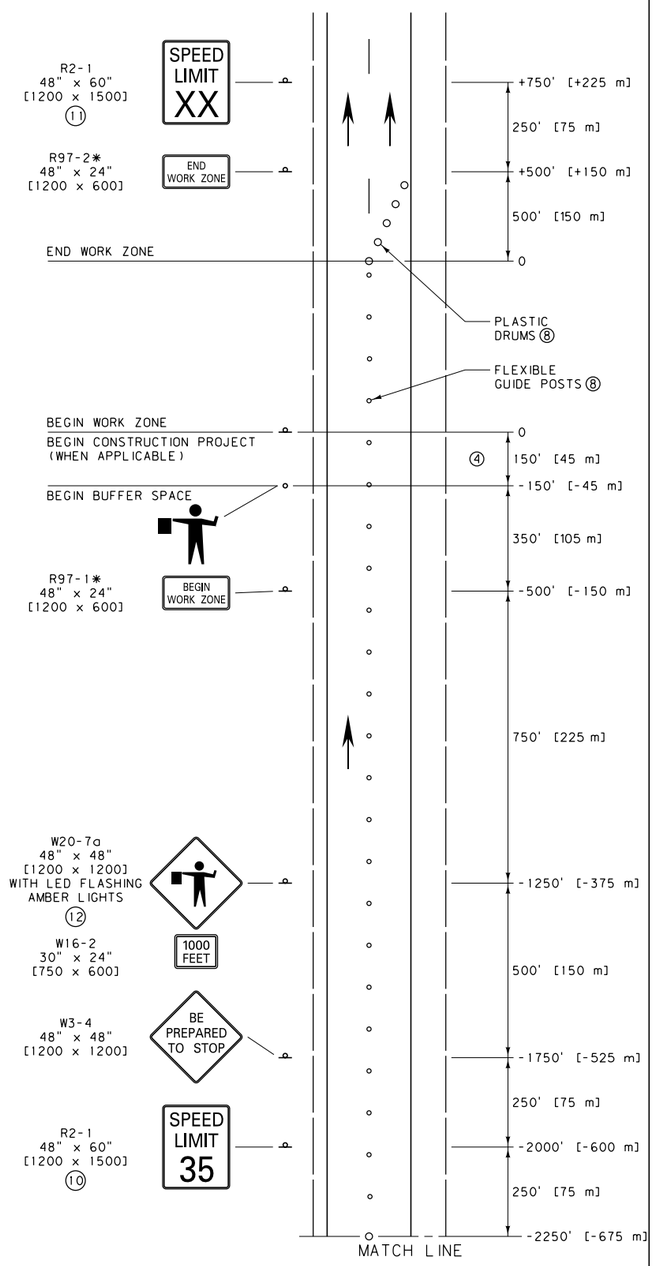

WORK ZONE WITH FLAGGER

NOTES:

① THESE SIGN LAYOUTS WORK IN CONJUNCTION WITH THE PERMANENT LAYOUT ILLUSTRATED ON DTL. DWG. NO. 618-20 FOR WORK ZONES LOCATED AT THE BEGIN AND END OF THE CONSTRUCTION PROJECT.

② INCLUDE REGULATORY SIGNING ONLY IF THERE IS REASON TO RESTRICT SPEED WITHIN THE WORK ZONE. MODIFY REGULATORY SIGNS TO MATCH ADJACENT REGULATIONS.

③ THE WORK ZONE REFERS TO THE AREA WITHIN THE CONSTRUCTION PROJECT WHERE WORK IS ACTUALLY TAKING PLACE.

④ THE BUFFER SPACE MAY BE INCREASED FOR DOWNGRADES AND OTHER CONDITIONS THAT AFFECT STOPPING DISTANCE.

⑤ USE MORE SPECIFIC SIGNS. WHERE APPLICABLE, SUCH AS W8-3 "PAVEMENT ENDS."

⑥ XX = SPEED DETERMINED BY THE PROJECT MANAGER.

⑦ PROVIDE A SECOND FLAGGER WHEN REQUIRED BY STANDARD SPECIFICATIONS, SECTION 618.

⑧ SPACE FLEXIBLE GUIDE POSTS ON TANGENTS AT INTERVALS IN FEET [METERS] OF NO MORE THAN TWO [0.6] TIMES THE SPEED LIMIT IN M.P.H. SPACE PLASTIC DRUMS IN ALL TAPER SECTIONS AT INTERVALS IN FEET [METERS] OF NO MORE THAN ONE [0.3] TIMES THE SPEED LIMIT IN M.P.H. FOR SPEED LIMITS LESS THAN 35 M.P.H., SPACE CHANNELIZING DEVICES AS DIRECTED BY THE PROJECT MANAGER.

⑨ WHEN PORTABLE SIGNS ARE USED, PLACE AS DIRECTED BY THE PROJECT MANAGER.

⑩ IF FLAGGER IS MORE THAN ONE MILE [1.6 km] FROM THE LANE CLOSURE, INCLUDE W3-5 SIGNS, AS REQUIRED.

⑪ POST THE END OF WORK ZONE SPEED LIMIT APPROPRIATE FOR ALL VEHICLES FOR THE REMAINDER OF THE CONSTRUCTION PROJECT BEFORE RESUMING TO NORMAL POSTED SPEED LIMITS AT THE END OF THE CONSTRUCTION PROJECT.

⑫ ENSURE THE AMBER LED FLASHING LIGHTS MEET REQUIREMENTS OF STANDARD SPECIFICATION 715 AND DTL. DWG. NO. 618-01.

⑬ POST THE W20-5 AFTER THE W20-1 OR G20-1 AND THE R2-15 IF THE MERGING TAPER OCCURS AT THE BEGINNING OF THE CONSTRUCTION PROJECT.

* DENOTES SIGNS THAT ARE UNIQUE TO MONTANA.

UNITS SHOWN IN BRACKETS [] ARE METRIC AND ARE IN MILLIMETERS (mm) UNLESS OTHER UNITS ARE SHOWN.

DETAILED DRAWING	
REFERENCE STANDARD SPEC. SECTION 618, 715	DWG. NO. 618-24
DIVIDED FOUR-LANE CONSTRUCTION PROJECT WORK ZONES	
EFFECTIVE: SEPTEMBER 2014	

MDT MONTANA DEPARTMENT OF TRANSPORTATION

NOTE:

THIS SEQUENCE OF SIGNS IS IDENTICAL FOR BOTH WORK ZONES SHOWN ON THIS DETAIL.

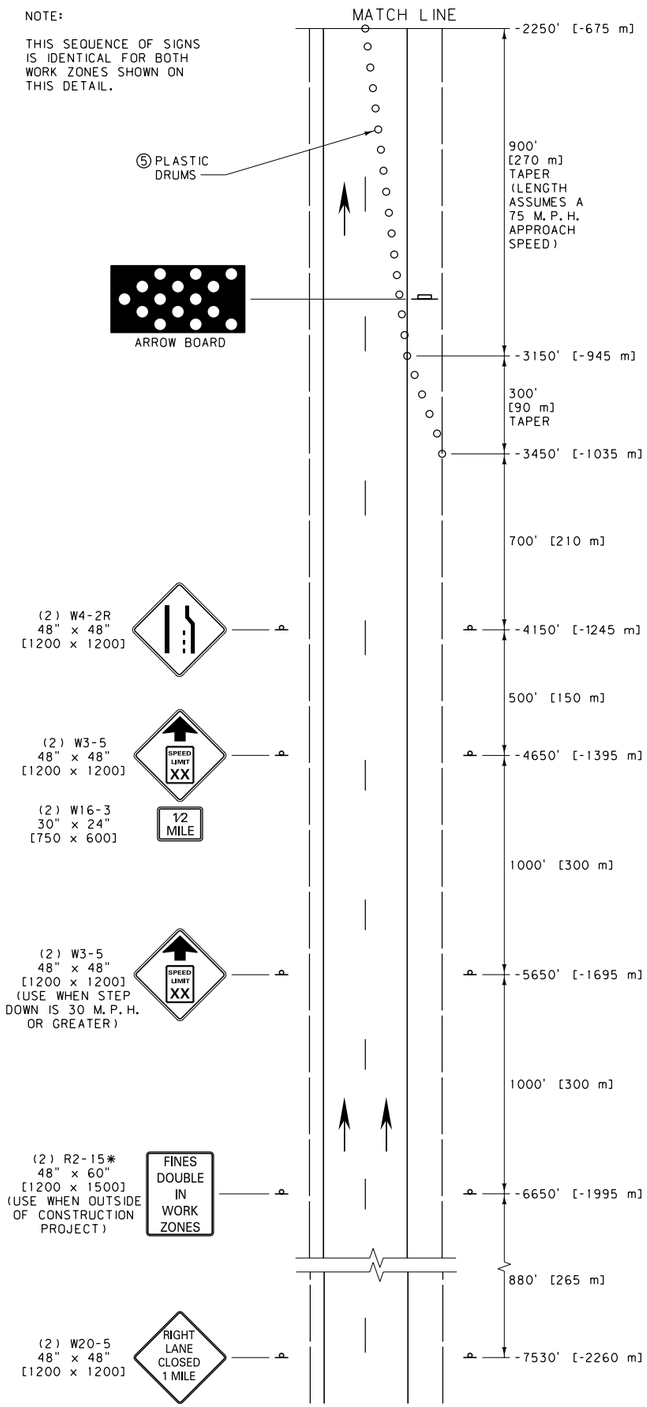

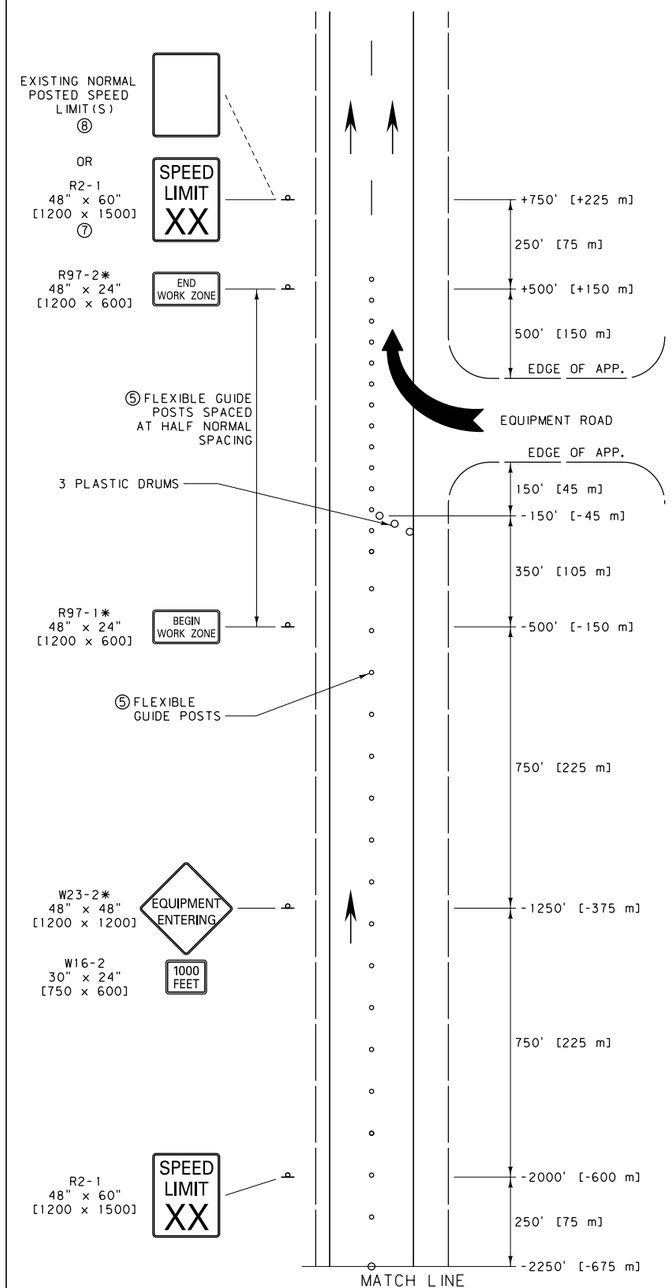

EQUIPMENT ENTRANCE WITH NO FLAGGER

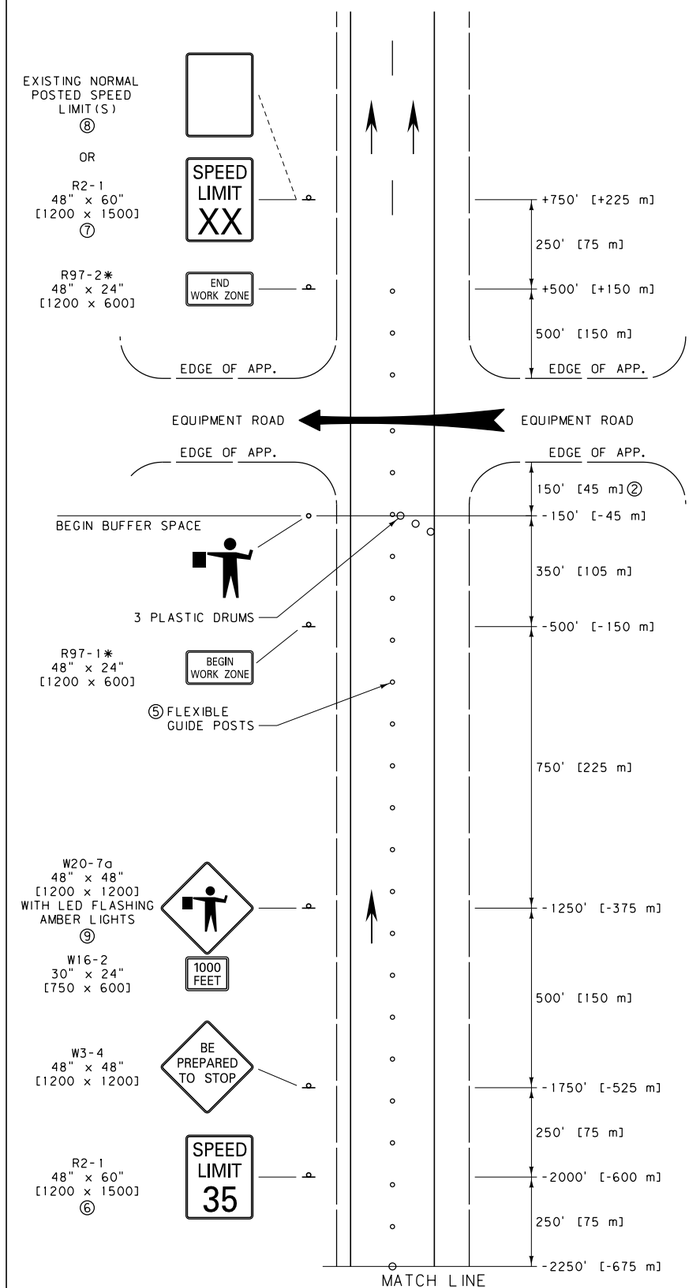

EQUIPMENT ENTRANCE WITH FLAGGER

NOTES:

① INCLUDE SPEED LIMIT SIGNING ONLY IF THERE IS REASON TO RESTRICT SPEED WITHIN THE WORK ZONE. REMOVE OR COVER REGULATORY SIGNS TO MATCH ADJACENT REGULATIONS.

② THE BUFFER SPACE MAY BE INCREASED FOR DOWNGRADES AND OTHER CONDITIONS THAT AFFECT STOPPING DISTANCE.

③ XX = SPEED DETERMINED BY THE PROJECT MANAGER.

④ THE WORK ZONE REFERS TO THE AREA WHERE WORK IS ACTUALLY TAKING PLACE. WHEN THIS OCCURS OUTSIDE OF A CONSTRUCTION PROJECT, INCLUDE THE W20-1 AND R2-15* SIGNS.

⑤ SPACE FLEXIBLE GUIDE POSTS ON TANGENTS AT INTERVALS IN FEET [METERS] OF NO MORE THAN TWO [0.6] TIMES THE SPEED LIMIT IN M.P.H. SPACE PLASTIC DRUMS IN ALL TAPER SECTIONS AT INTERVALS IN FEET [METERS] OF NO MORE THAN ONE [0.3] TIMES THE SPEED LIMIT IN M.P.H. FOR SPEED LIMITS LESS THAN 35 M.P.H., SPACE CHANNELIZING DEVICES AS DIRECTED BY THE PROJECT MANAGER.

⑥ IF FLAGGER IS MORE THAN ONE MILE [1.6 km] FROM THE LANE CLOSURE, INCLUDE W3-5 SIGNS, AS REQUIRED.

⑦ POST THE END OF WORK ZONE SPEED LIMIT APPROPRIATE FOR ALL VEHICLES FOR THE REMAINDER OF THE CONSTRUCTION PROJECT BEFORE RESUMING TO NORMAL POSTED SPEED LIMITS AT THE END OF THE CONSTRUCTION PROJECT.

⑧ WHEN OUTSIDE OF A CONSTRUCTION PROJECT, POST THE SPEED LIMIT CONSISTING OF ONE LIMIT WHEN THE NORMAL POSTED SPEED LIMIT FOR ALL VEHICLES IS THE SAME. WHEN CAR AND TRUCK SPEED LIMITS DIFFER, POST BOTH LIMITS ON A SINGLE SIGN.

⑨ ENSURE THE AMBER LED FLASHERS MEET REQUIREMENTS OF SECTION 715 AND DTL. DWG. NO. 618-01.

⑩ POST THE W20-5 AFTER THE W20-1 OR THE G20-1 AND THE R2-15 IF THE MERGING TAPER OCCURS AT THE BEGINNING OF THE CONSTRUCTION PROJECT

* DENOTES SIGNS THAT ARE UNIQUE TO MONTANA.

UNITS SHOWN IN BRACKETS [] ARE METRIC AND ARE IN MILLIMETERS (mm) UNLESS OTHER UNITS ARE SHOWN.

DETAILED DRAWING	
REFERENCE STANDARD SPEC. SECTION 618, 715	DWG. NO. 618-27
DIVIDED FOUR-LANE EQUIPMENT ENTRANCE	
EFFECTIVE: SEPTEMBER 2014	

MDT MONTANA DEPARTMENT OF TRANSPORTATION

NOTE:

THIS SEQUENCE OF SIGNS IS IDENTICAL FOR BOTH WORK ZONES SHOWN ON THIS DETAIL.

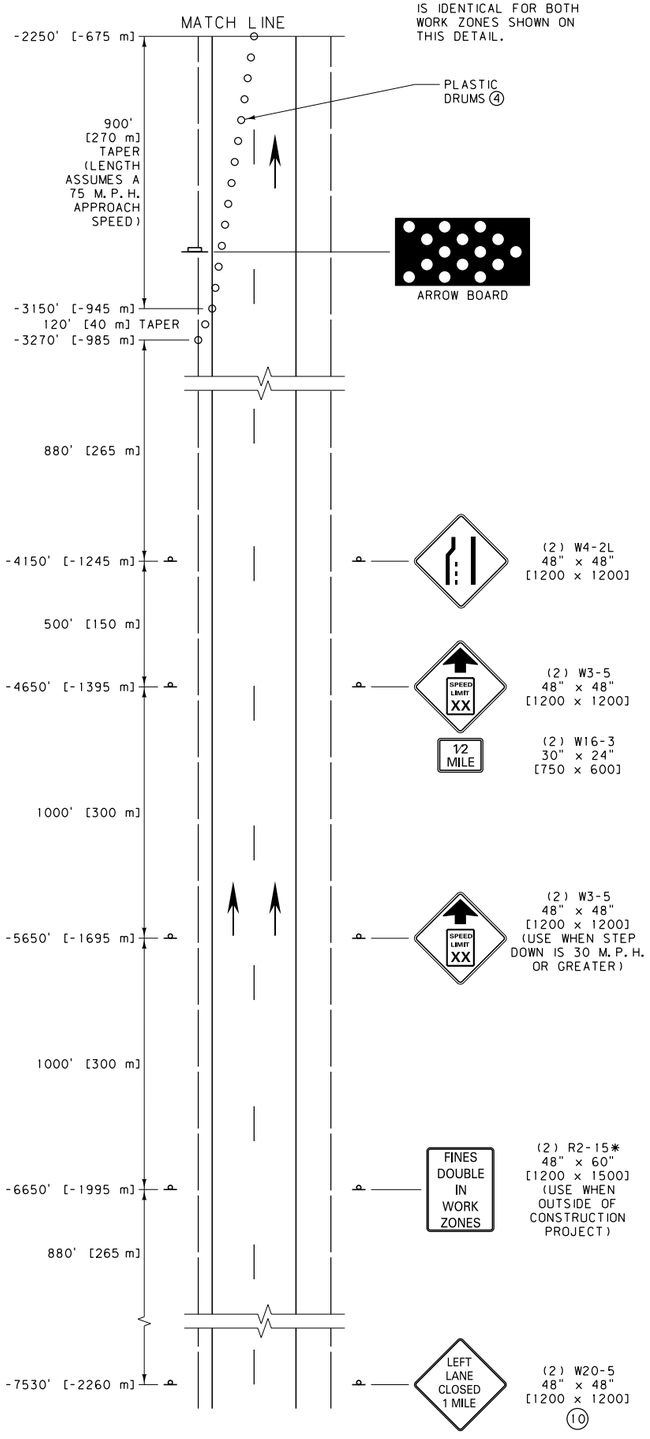

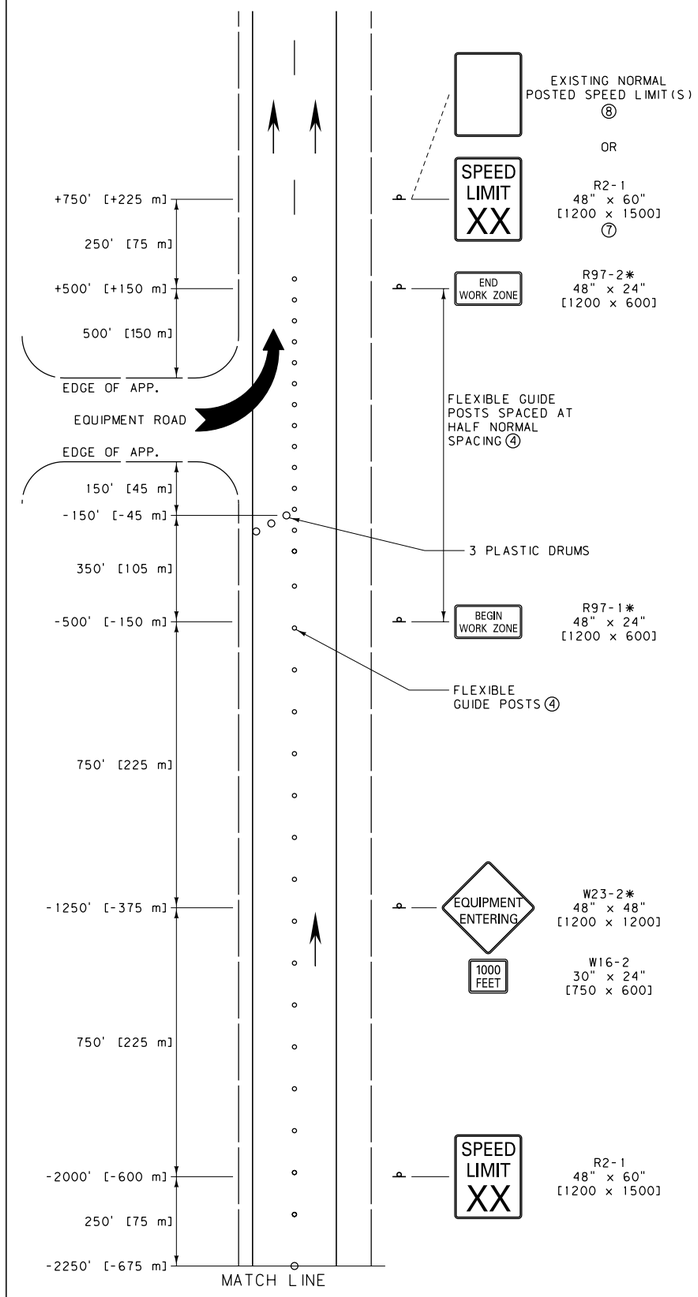

MEDIAN CROSSING WITH NO FLAGGER

(USE WITH WIDE MEDIANS)

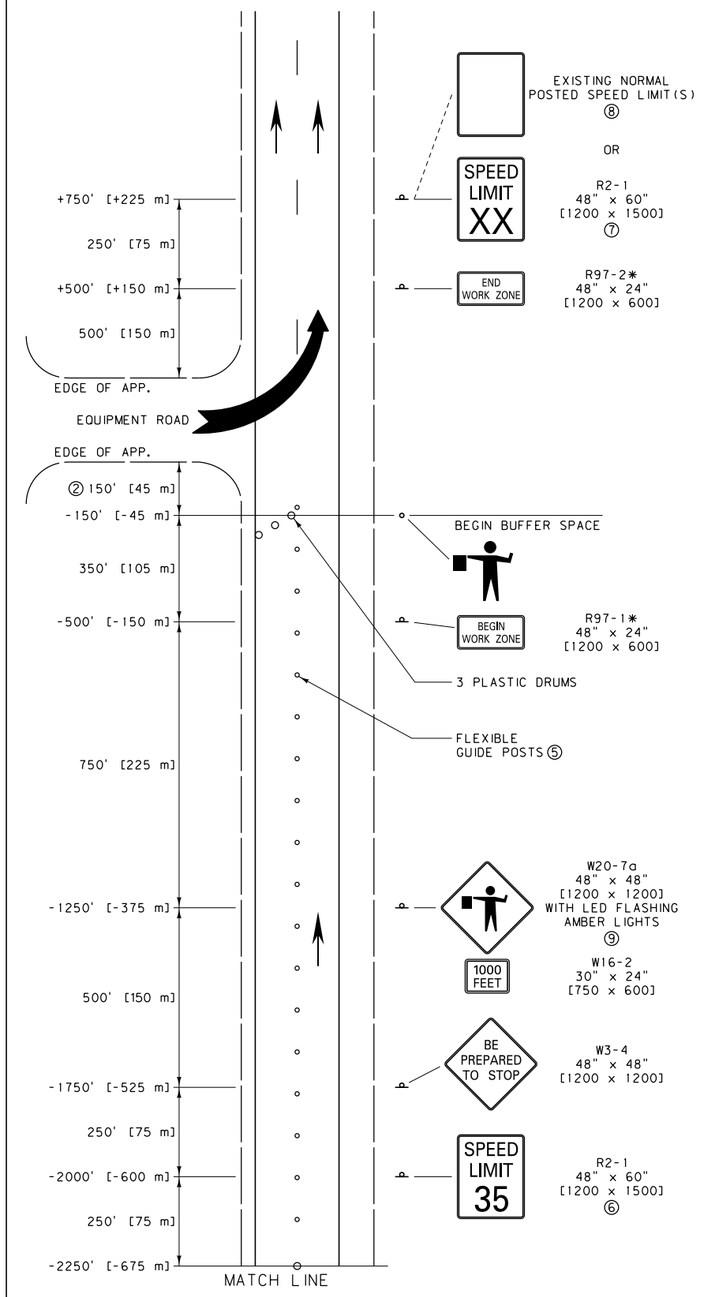

MEDIAN CROSSING WITH FLAGGER

(USE WITH NARROW MEDIANS)

NOTES:

① INCLUDE SPEED LIMIT SIGNING ONLY IF THERE IS REASON TO RESTRICT SPEED WITHIN THE WORK ZONE. REMOVE OR COVER REGULATORY SIGNS TO MATCH ADJACENT REGULATIONS.

② THE BUFFER SPACE MAY BE INCREASED FOR DOWNGRADES AND OTHER CONDITIONS THAT AFFECT STOPPING DISTANCE.

③ XX = SPEED DETERMINED BY THE PROJECT MANAGER.

④ THE WORK ZONE REFERS TO THE AREA WHERE WORK IS ACTUALLY TAKING PLACE. WHEN THIS OCCURS OUTSIDE OF A CONSTRUCTION PROJECT, INCLUDE THE W20-1 AND R2-15* SIGNS.

⑤ SPACE FLEXIBLE GUIDE POSTS ON TANGENTS AT INTERVALS IN FEET [METERS] OF NO MORE THAN TWO [0.6] TIMES THE SPEED LIMIT IN M.P.H. SPACE PLASTIC DRUMS IN ALL TAPER SECTIONS AT INTERVALS IN FEET [METERS] OF NO MORE THAN ONE [0.3] TIMES THE SPEED LIMIT IN M.P.H. FOR SPEED LIMITS LESS THAN 35 M.P.H., SPACE CHANNELIZING DEVICES AS DIRECTED BY THE PROJECT MANAGER.

⑥ IF FLAGGER IS MORE THAN ONE MILE [1.6 km] FROM THE LANE CLOSURE, INCLUDE W3-5 SIGNS, AS REQUIRED.

⑦ POST THE END OF WORK ZONE SPEED LIMIT APPROPRIATE FOR ALL VEHICLES FOR THE REMAINDER OF THE CONSTRUCTION PROJECT BEFORE RESUMING TO NORMAL POSTED SPEED LIMITS AT THE END OF THE CONSTRUCTION PROJECT.

⑧ WHEN OUTSIDE OF A CONSTRUCTION PROJECT, POST THE SPEED LIMIT CONSISTING OF ONE LIMIT WHEN THE NORMAL POSTED SPEED LIMIT FOR ALL VEHICLES IS THE SAME. WHEN CAR AND TRUCK SPEED LIMITS DIFFER, POST BOTH LIMITS ON A SINGLE SIGN.

⑨ ENSURE THE AMBER LED FLASHERS MEET REQUIREMENTS OF SECTION 715 AND DTL. DWG. NO. 618-01.

⑩ POST THE W20-5 AFTER THE W20-1 OR G20-1 AND THE R2-15 IF THE MERGING TAPER OCCURS AT THE BEGINNING OF THE CONSTRUCTION PROJECT.

* DENOTES SIGNS THAT ARE UNIQUE TO MONTANA.

UNITS SHOWN IN BRACKETS [] ARE METRIC AND ARE IN MILLIMETERS (mm) UNLESS OTHER UNITS ARE SHOWN.

DETAILED DRAWING	
REFERENCE STANDARD SPEC. SECTION 618, 715	DWG. NO. 618-28
DIVIDED FOUR-LANE MEDIAN CROSSING	
EFFECTIVE: SEPTEMBER 2014	

MDT MONTANA DEPARTMENT OF TRANSPORTATION

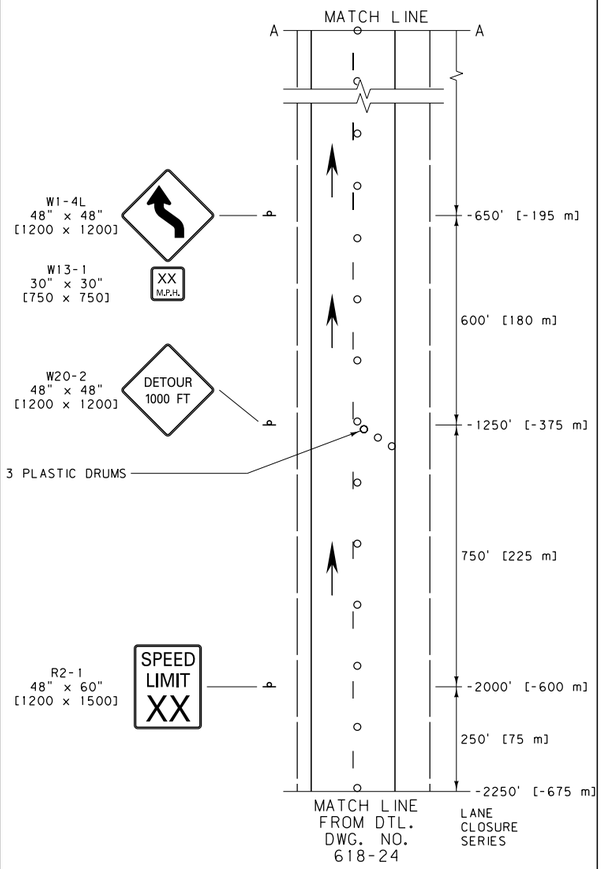

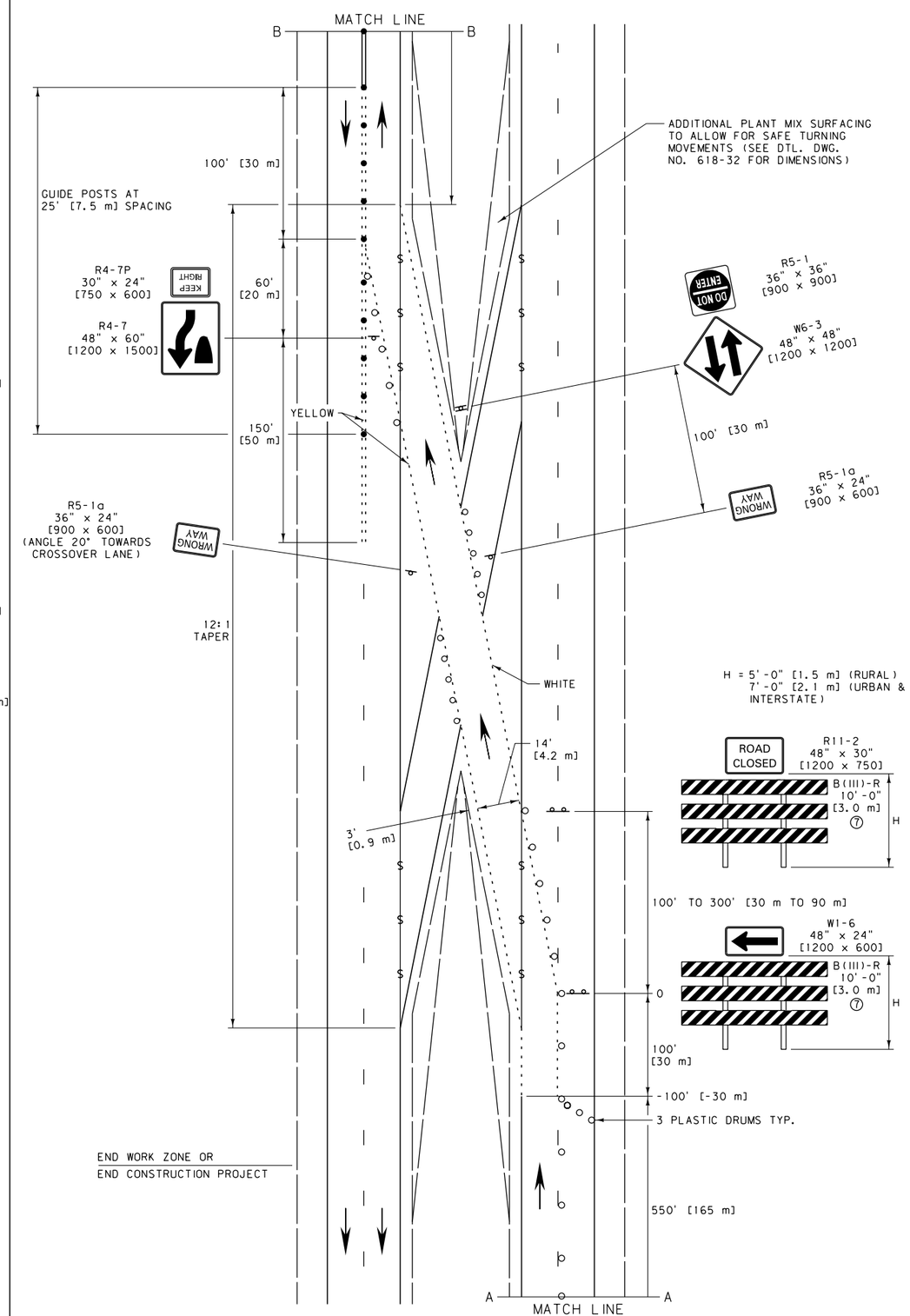

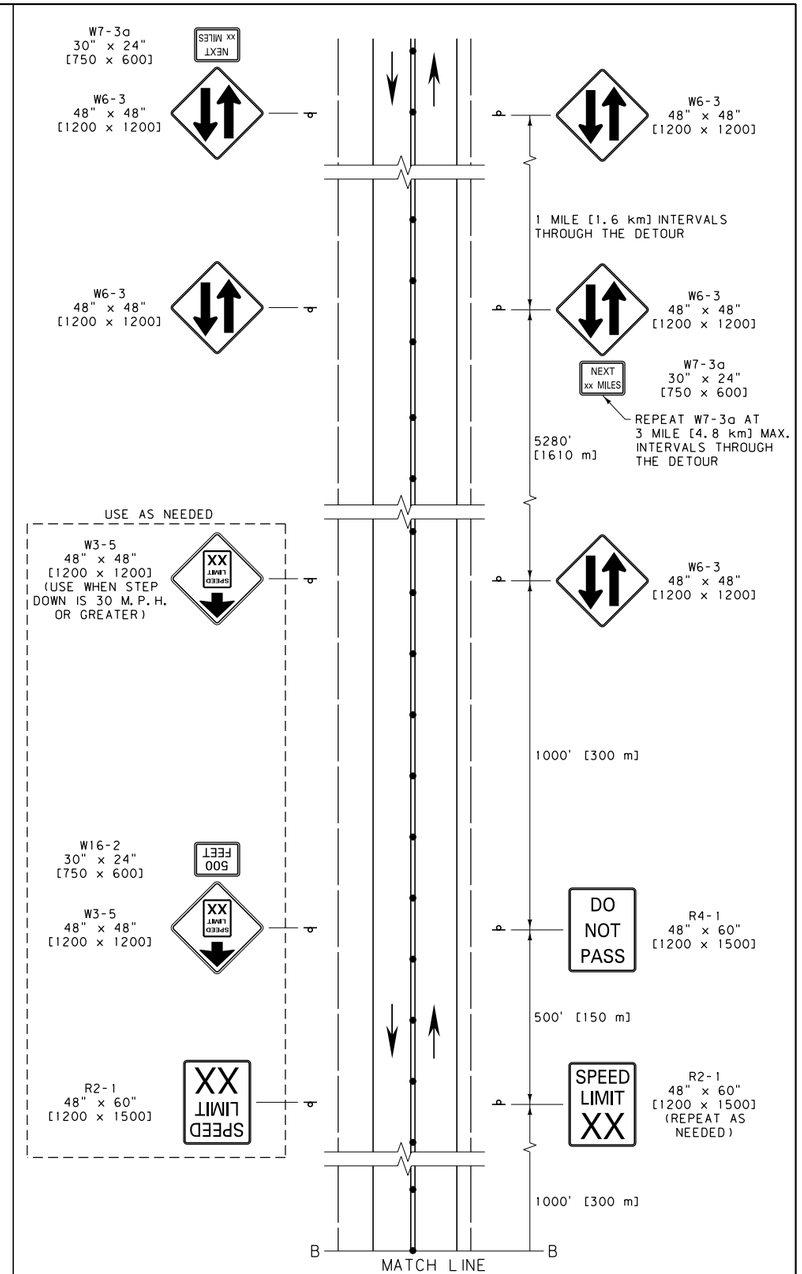

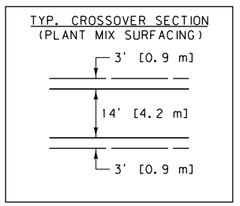

LEGEND

- —S— OBLITERATE CONFLICTING PAVEMENT MARKINGS AND FILL ANY EXISTING RUMBLE STRIPS WITH PMS
- o PLASTIC DRUMS (SEE NOTES FOR SPACING)
- - - - - - RAISED RIGID PAVEMENT MARKERS TYPE I (WHITE) OR TYPE II (YELLOW) AT 5' [1.5 m] SPACING
- ═══ DOUBLE YELLOW PAINT OR DOUBLE PLASTIC PAVEMENT MARKING TABS AT 5' [1.5 m] SPACING
- ● FLEXIBLE GLUE-DOWN GUIDE POSTS ON TWO-LANE (SEE NOTES FOR SPACING EXCEPT AS SHOWN)

NOTES:

1. INCLUDE REGULATORY SIGNING ONLY AS REQUIRED. REMOVE OR COVER REGULATORY SIGNS TO MATCH ADJACENT REGULATIONS.
2. THE WORK ZONE REFERS TO THE AREA WITHIN THE CONSTRUCTION PROJECT WHERE WORK IS ACTUALLY TAKING PLACE.
3. INDICATED SPACINGS ARE INTENDED TO BE A MAXIMUM AND MAY BE REDUCED IF CONDITIONS WARRANT.
4. XX = SPEED DETERMINED BY THE MEDIAN CROSSOVER DESIGN SPEED OR THE PROJECT MANAGER.
5. SPACE CHANNELIZING DEVICES ON TANGENTS AT INTERVALS IN FEET [METERS] OF NO MORE THAN TWO [0.6] TIMES THE SPEED LIMIT IN M.P.H. AND ON ALL TAPER SECTIONS AT INTERVALS IN FEET [METERS] OF NO MORE THAN ONE [0.3] TIMES THE SPEED LIMIT IN M.P.H. FOR SPEED LIMITS LESS THAN 35 M.P.H., SPACE CHANNELIZING DEVICES AS DIRECTED BY THE PROJECT MANAGER.
6. OBLITERATE ALL PAVEMENT MARKINGS THAT CONFLICT AT ANY TIME DURING OR AFTER MEDIAN CROSSOVER USE.
7. SEE DETAILED DRAWING 618-03.

UNITS SHOWN IN BRACKETS [] ARE METRIC AND ARE IN MILLIMETERS (mm) UNLESS OTHER UNITS ARE SHOWN.

DETAILED DRAWING	
REFERENCE STANDARD SPEC. SECTION 618	DWG. NO. 618-30
TEMPORARY FOUR-LANE TO TWO-LANE MEDIAN CROSSOVER	
EFFECTIVE: SEPTEMBER 2014	

MDT MONTANA DEPARTMENT OF TRANSPORTATION

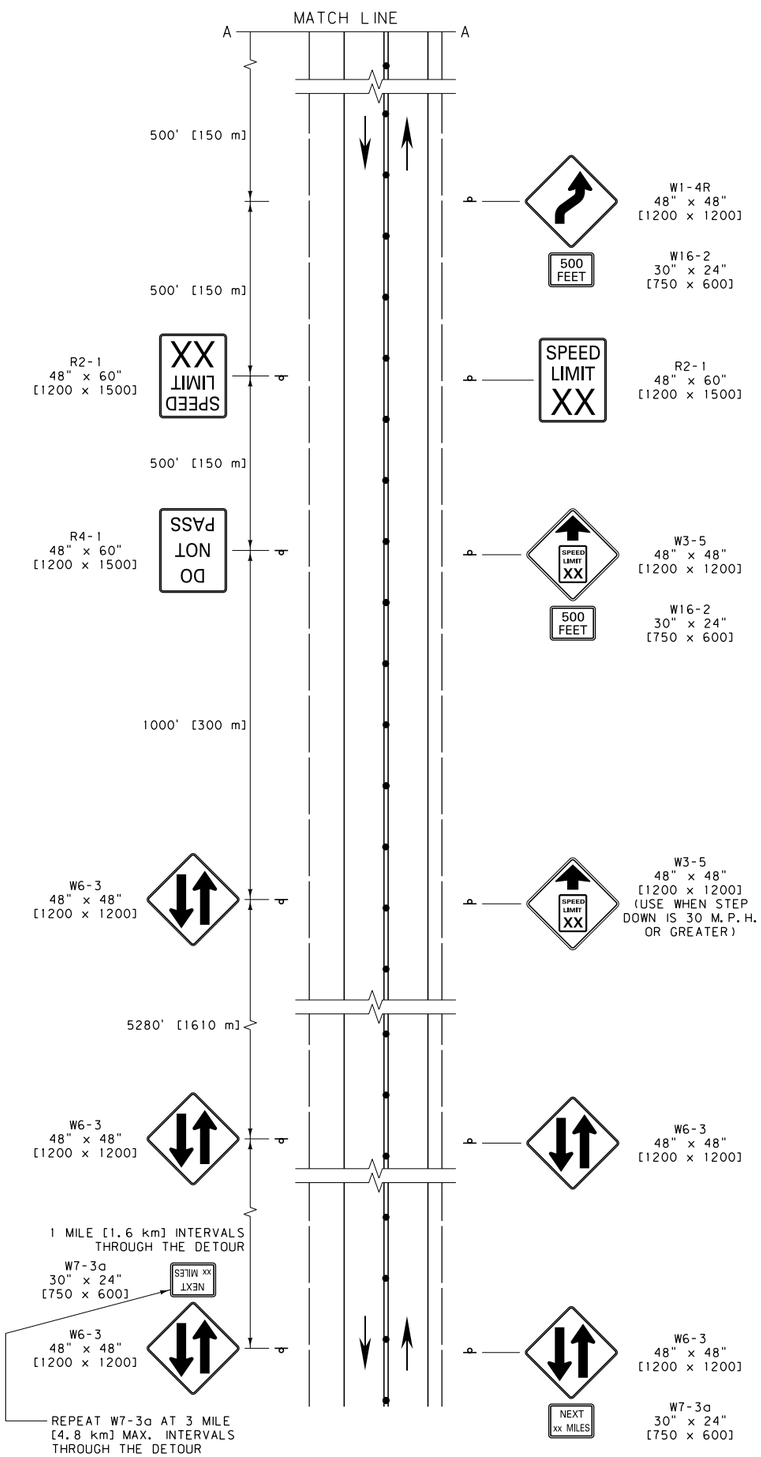

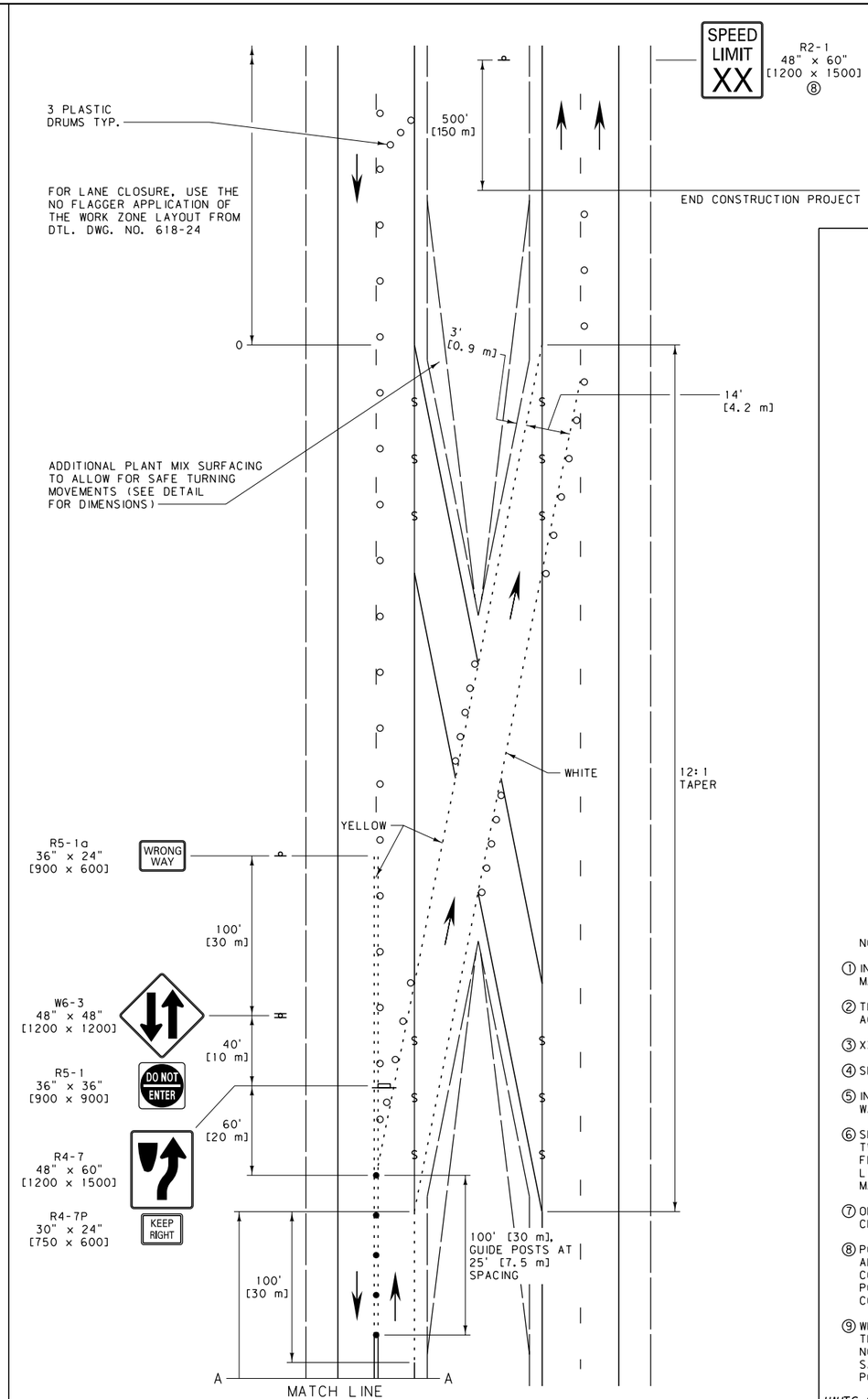

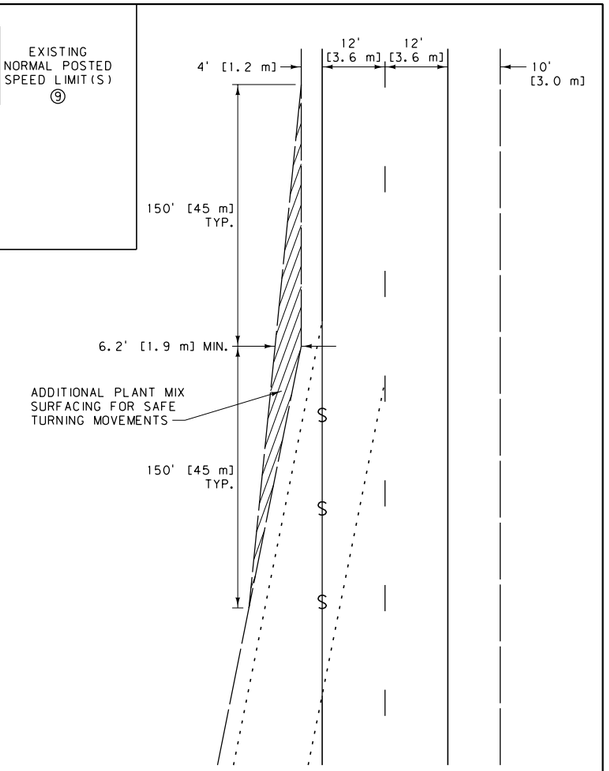

ADDITIONAL SURFACING DETAIL

LEGEND

- OBLITERATE CONFLICTING PAVEMENT MARKINGS AND FILL ANY EXISTING RUMBLE STRIPS WITH PMS
- PLASTIC DRUMS (SEE NOTES FOR SPACING)
- RAISED RIGID PAVEMENT MARKERS TYPE I (WHITE) OR TYPE II (YELLOW) AT 5' [1.5 m] SPACING
- DOUBLE YELLOW PAINT OR DOUBLE PLASTIC PAVEMENT MARKING TABS AT 5' [1.5 m] SPACING
- FLEXIBLE GLUE-DOWN GUIDE POSTS ON TWO-LANE (SEE NOTES FOR SPACING EXCEPT AS SHOWN)

NOTES:

1. INCLUDE REGULATORY SIGNING ONLY AS REQUIRED. REMOVE OR COVER REGULATORY SIGNS TO MATCH ADJACENT REGULATIONS.
2. THE WORK ZONE REFERS TO THE AREA WITHIN THE CONSTRUCTION PROJECT WHERE WORK IS ACTUALLY TAKING PLACE.
3. XX = SPEED DETERMINED BY THE MEDIAN CROSSOVER DESIGN SPEED OR THE PROJECT MANAGER.
4. SEE DTL. DWG. NO. 618-30 FOR TYPICAL CROSSOVER SECTION DIMENSIONS.
5. INDICATED SPACINGS ARE INTENDED TO BE A MAXIMUM AND MAY BE REDUCED IF CONDITIONS WARRANT.
6. SPACE CHANNELIZING DEVICES ON TANGENTS AT INTERVALS IN FEET [METERS] OF NO MORE THAN TWO [0.6] TIMES THE SPEED LIMIT IN M.P.H. AND ON ALL TAPER SECTIONS AT INTERVALS IN FEET [METERS] OF NO MORE THAN ONE [0.3] TIMES THE SPEED LIMIT IN M.P.H. FOR SPEED LIMITS LESS THAN 35 M.P.H., SPACE CHANNELIZING DEVICES AS DIRECTED BY THE PROJECT MANAGER.
7. OBLITERATE ALL PAVEMENT MARKINGS THAT CONFLICT AT ANY TIME DURING OR AFTER MEDIAN CROSSOVER USE.
8. POST THE SPEED LIMIT APPROPRIATE FOR ALL VEHICLES FOR THE REMAINDER OF THE CONSTRUCTION PROJECT BEFORE RESUMING TO NORMAL POSTED SPEED LIMITS AT THE END OF THE CONSTRUCTION PROJECT.
9. WHEN AT THE END OF A CONSTRUCTION PROJECT, POST THE SPEED LIMIT CONSISTING OF ONE LIMIT WHEN THE NORMAL POSTED SPEED LIMIT FOR ALL VEHICLES IS THE SAME. WHEN CAR AND TRUCK SPEED LIMITS DIFFER, POST BOTH LIMITS ON A SINGLE SIGN.

UNITS SHOWN IN BRACKETS [] ARE METRIC AND ARE IN MILLIMETERS (mm) UNLESS OTHER UNITS ARE SHOWN.

DETAILED DRAWING	
REFERENCE STANDARD SPEC. SECTION 618	DWG. NO. 618-32
TEMPORARY TWO-LANE TO FOUR-LANE MEDIAN CROSSOVER	
EFFECTIVE: SEPTEMBER 2014	

MDT MONTANA DEPARTMENT OF TRANSPORTATION

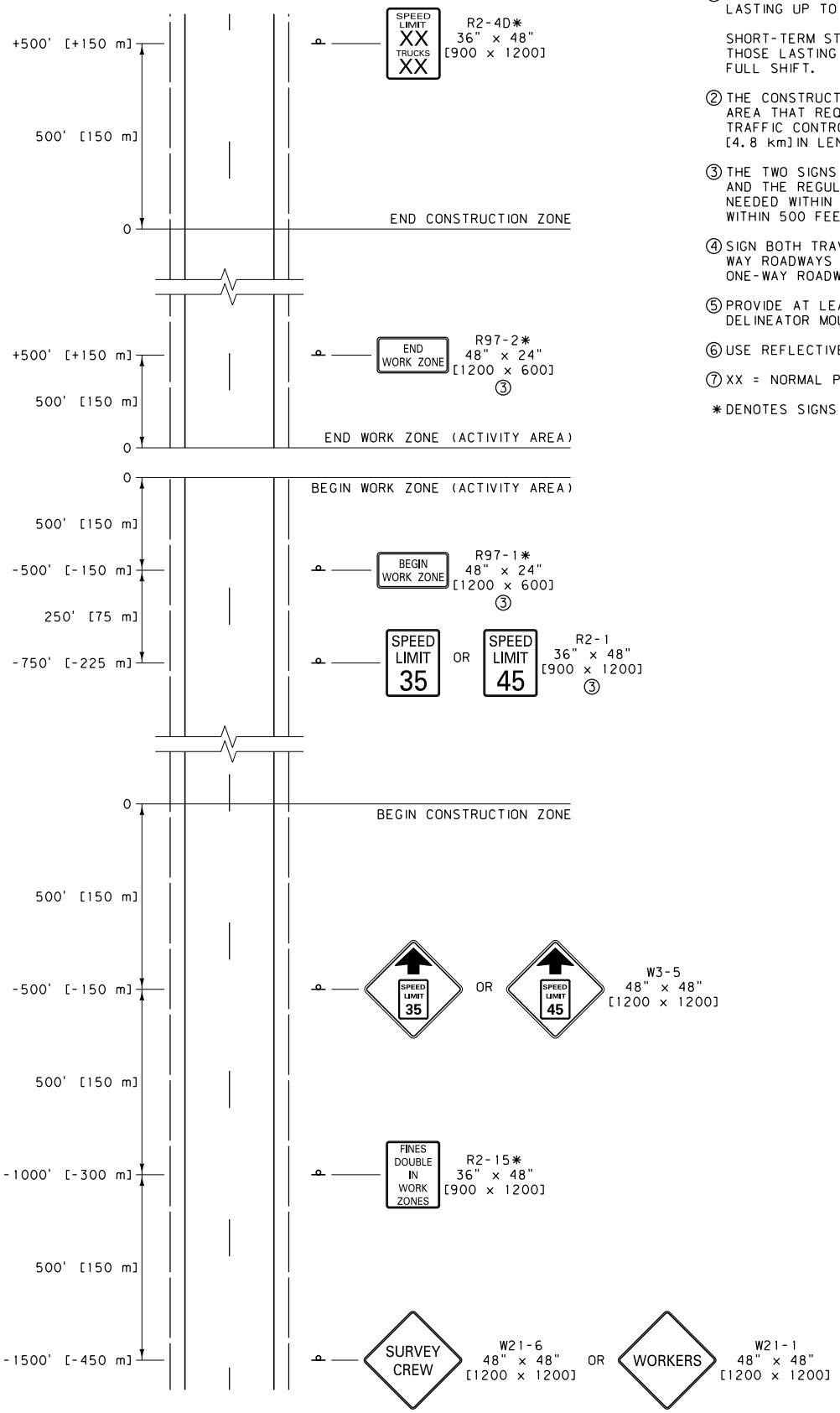

NOTES:

① SHORT DURATION ACTIVITIES ARE DEFINED AS THOSE LASTING UP TO ONE HOUR.

SHORT-TERM STATIONARY ACTIVITIES ARE DEFINED AS THOSE LASTING GREATER THAN ONE HOUR, UP TO A FULL SHIFT.

② THE CONSTRUCTION ZONE REFERS TO THE GENERAL AREA THAT REQUIRES TEMPORARY WORK ZONE TRAFFIC CONTROL. IT SHOULD NOT EXCEED 3 MILES [4.8 km] IN LENGTH.

③ THE TWO SIGNS MARKING THE WORK ZONE BOUNDARIES AND THE REGULATORY SPEED SIGN MUST MOVE AS NEEDED WITHIN THE CONSTRUCTION ZONE TO REMAIN WITHIN 500 FEET [150 m] OF THE WORK ACTIVITY.

④ SIGN BOTH TRAVEL DIRECTIONS ON TWO-LANE, TWO-WAY ROADWAYS OR BOTH SHOULDERS ON TWO-LANE, ONE-WAY ROADWAYS.

⑤ PROVIDE AT LEAST THE DISTANCE SHOWN FOR DELINEATOR MOUNTED SIGNS.

⑥ USE REFLECTIVE DEVICES.

⑦ XX = NORMAL POSTED SPEED LIMIT(S).

* DENOTES SIGNS THAT ARE UNIQUE TO MONTANA.

UNITS SHOWN IN BRACKETS [] ARE METRIC AND ARE IN MILLIMETERS (mm) UNLESS OTHER UNITS ARE SHOWN.

DETAILED DRAWING	
REFERENCE STANDARD SPEC. SECTION 618	DWG. NO. 618-34
SHORT DURATION OR SHORT-TERM STATIONARY CREW SIGNING	
EFFECTIVE: SEPTEMBER 2014	
MDT MONTANA DEPARTMENT OF TRANSPORTATION	

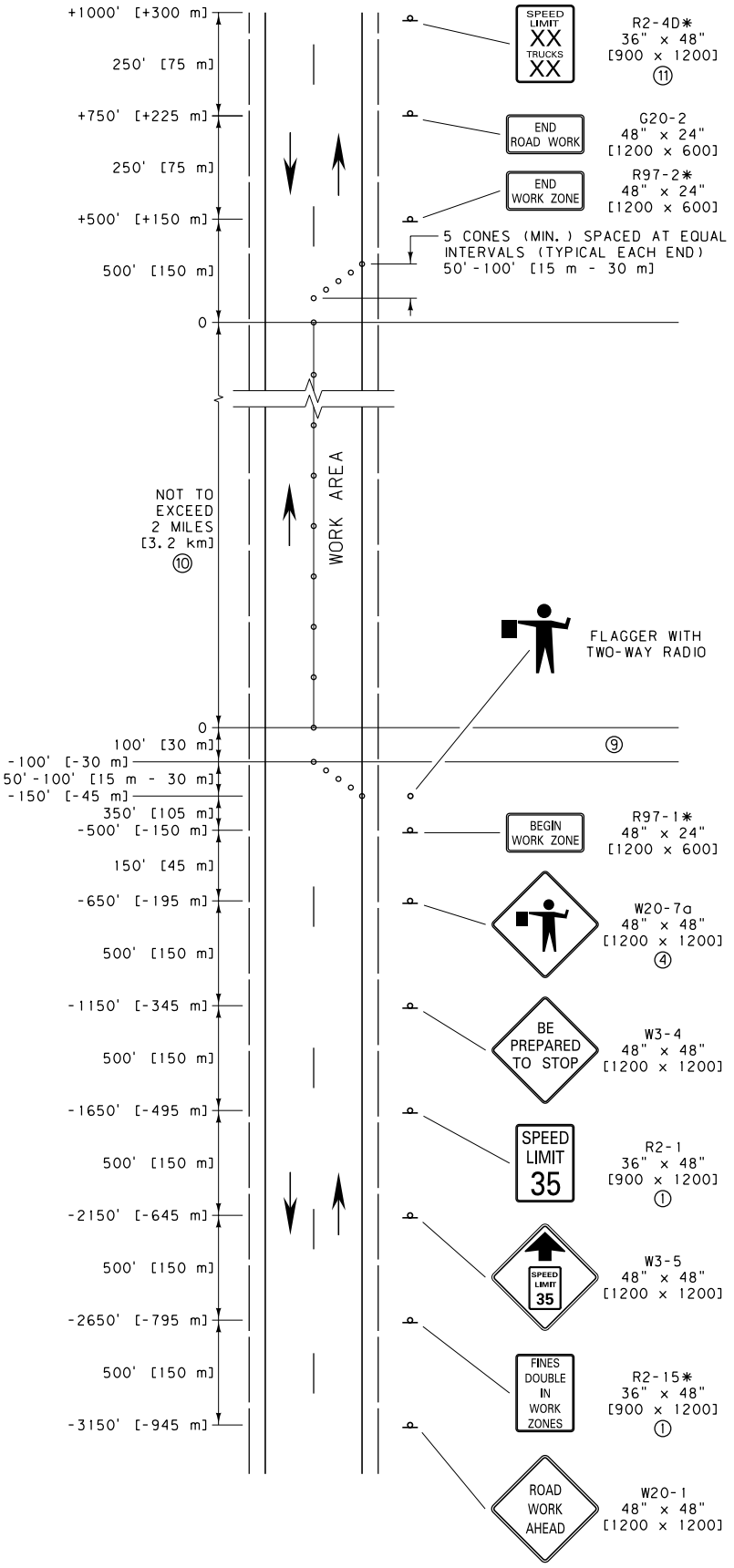

NOTES:

1. MINIMUM REGULATORY SIGN SIZE IS 24" X 30" [600 x 750] ON TWO-LANE ROADS.
2. ON ROADWAYS WITH HIGH TRAFFIC VOLUMES OR VISIBILITY RESTRICTIONS, A 500' [150 m] SPACING FOR ALL SIGNS IS RECOMMENDED.
3. SPACE CHANNELIZING DEVICES AT INTERVALS IN FEET [METERS] EQUAL TO TWICE [0.6 TIMES] THE SPEED LIMIT IN M.P.H. THROUGH THE BUFFER AND WORK AREA.
4. IF A NEED ARISES TO INCREASE VEHICLE STORAGE, ADD AN ADDITIONAL W20-7a "FLAGGER AHEAD" SIGN BETWEEN THE R2-1 AND W3-4 SIGNS AND/OR CONSIDER AN ADDITIONAL ADVANCE FLAGGER.
5. A MIRROR IMAGE OF THIS SIGN SEQUENCE IS REQUIRED FOR THE TRAFFIC FROM THE OPPOSITE DIRECTION.
6. FOR MORE INFORMATION OR CLARIFICATION CONTACT THE DISTRICT TRAFFIC ENGINEER. FOR EXAMPLE, IF WORK ZONE IS CLOSE TO A HORIZONTAL CURVE, A VERTICAL CURVE, A BRIDGE, INTERCHANGE, POOR SIGHT DISTANCE, OR OTHER SPECIAL CONDITION.
7. COVER ANY CONFLICTING SIGNS IN THE WORK ZONE.
8. SHORT-TERM WORK ZONE SIGNING IS NOT REQUIRED TO BE POST MOUNTED.
9. THE BUFFER SPACE CAN BE LATERAL AND LONGITUDINAL AND MAY BE INCREASED FOR DOWNGRADES AND OTHER CONDITIONS THAT AFFECT STOPPING DISTANCE.
10. TYPICALLY 2 MILES [3.2 km] IS THE MAX. WORK AREA. HOWEVER, WHEN SIGHT DISTANCE, BUFFER ZONES OR ACCOMPLISHMENT RATES FOR EQUIPMENT ARE CONSIDERED, SOME MINOR ADJUSTMENTS TO THIS MAX. MAY BE CONSIDERED.
11. XX = NORMAL POSTED SPEED LIMIT(S).

* DENOTES SIGNS THAT ARE UNIQUE TO MONTANA.

UNITS SHOWN IN BRACKETS [] ARE METRIC AND ARE IN MILLIMETERS (mm) UNLESS OTHER UNITS ARE SHOWN.

DETAILED DRAWING	
REFERENCE STANDARD SPEC. SECTION 618	DWG. NO. 618-M1
MAINTENANCE GUIDELINE FOR SHORT-TERM TWO-LANE CRACK SEALING WORK ZONE	
EFFECTIVE: SEPTEMBER 2014	
MDT MONTANA DEPARTMENT OF TRANSPORTATION	

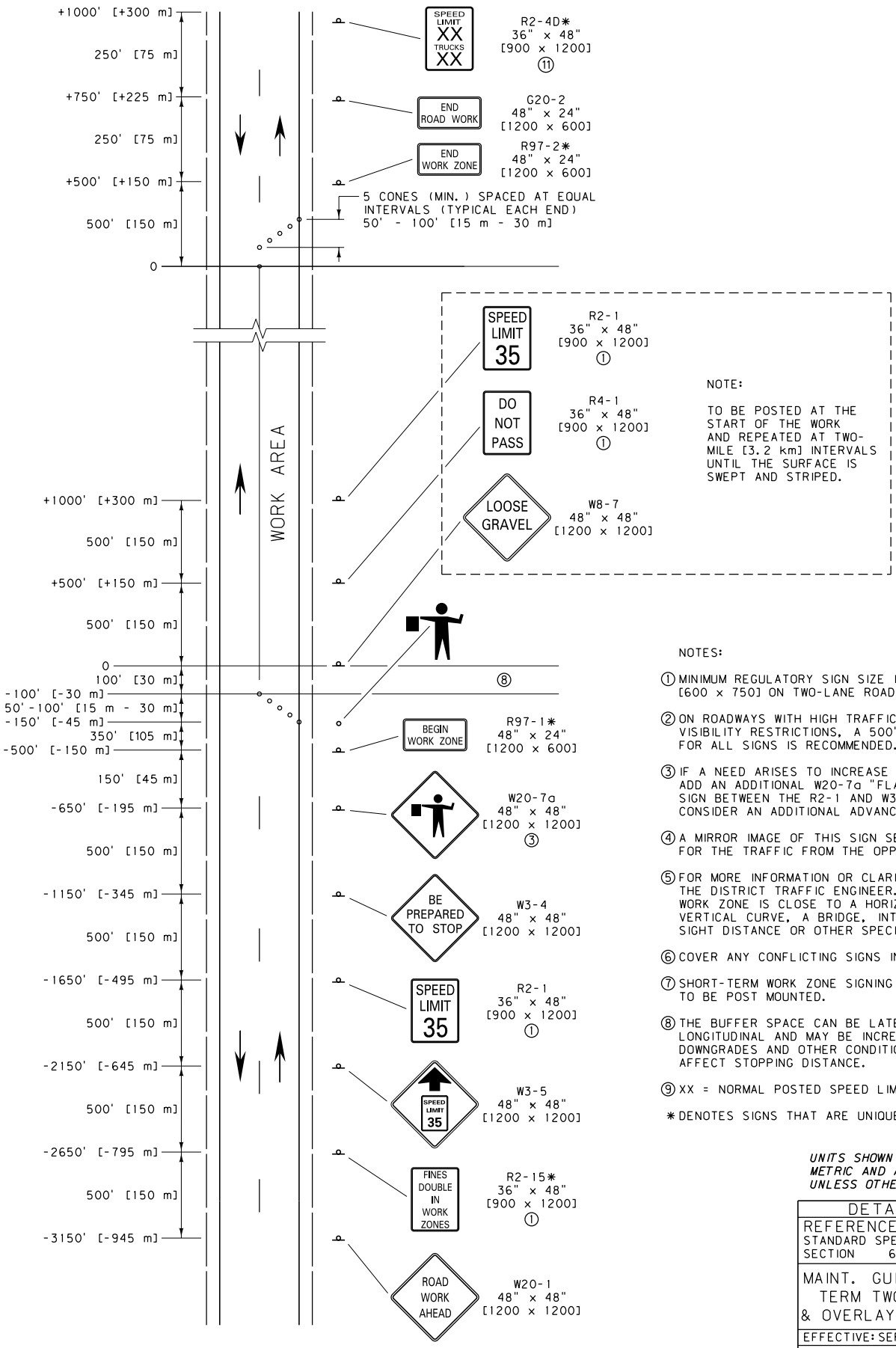

NOTES:

1. MINIMUM REGULATORY SIGN SIZE IS 24" x 30" [600 x 750] ON TWO-LANE ROADS.
2. ON ROADWAYS WITH HIGH TRAFFIC VOLUMES OR VISIBILITY RESTRICTIONS, A 500' [150 m] SPACING FOR ALL SIGNS IS RECOMMENDED.
3. IF A NEED ARISES TO INCREASE VEHICLE STORAGE, ADD AN ADDITIONAL W20-7a "FLAGGER AHEAD" SIGN BETWEEN THE R2-1 AND W3-4 SIGNS AND/OR CONSIDER AN ADDITIONAL ADVANCE FLAGGER.
4. A MIRROR IMAGE OF THIS SIGN SEQUENCE IS REQUIRED FOR THE TRAFFIC FROM THE OPPOSITE DIRECTION.
5. FOR MORE INFORMATION OR CLARIFICATION CONTACT THE DISTRICT TRAFFIC ENGINEER. FOR EXAMPLE, IF WORK ZONE IS CLOSE TO A HORIZONTAL CURVE, A VERTICAL CURVE, A BRIDGE, INTERCHANGE, POOR SIGHT DISTANCE OR OTHER SPECIAL CONDITION.
6. COVER ANY CONFLICTING SIGNS IN THE WORK ZONE.
7. SHORT-TERM WORK ZONE SIGNING IS NOT REQUIRED TO BE POST MOUNTED.
8. THE BUFFER SPACE CAN BE LATERAL AND LONGITUDINAL AND MAY BE INCREASED FOR DOWNGRADES AND OTHER CONDITIONS THAT AFFECT STOPPING DISTANCE.
9. XX = NORMAL POSTED SPEED LIMIT(S).

* DENOTES SIGNS THAT ARE UNIQUE TO MONTANA.

UNITS SHOWN IN BRACKETS [] ARE METRIC AND ARE IN MILLIMETERS (mm) UNLESS OTHER UNITS ARE SHOWN.

DETAILED DRAWING	
REFERENCE STANDARD SPEC. SECTION 618	DWG. NO. 618-M2
MAINT. GUIDELINE FOR SHORT-TERM TWO-LANE CHIP SEAL & OVERLAY (PILOTED TRAFFIC)	
EFFECTIVE: SEPTEMBER 2014	

MDT MONTANA DEPARTMENT OF TRANSPORTATION

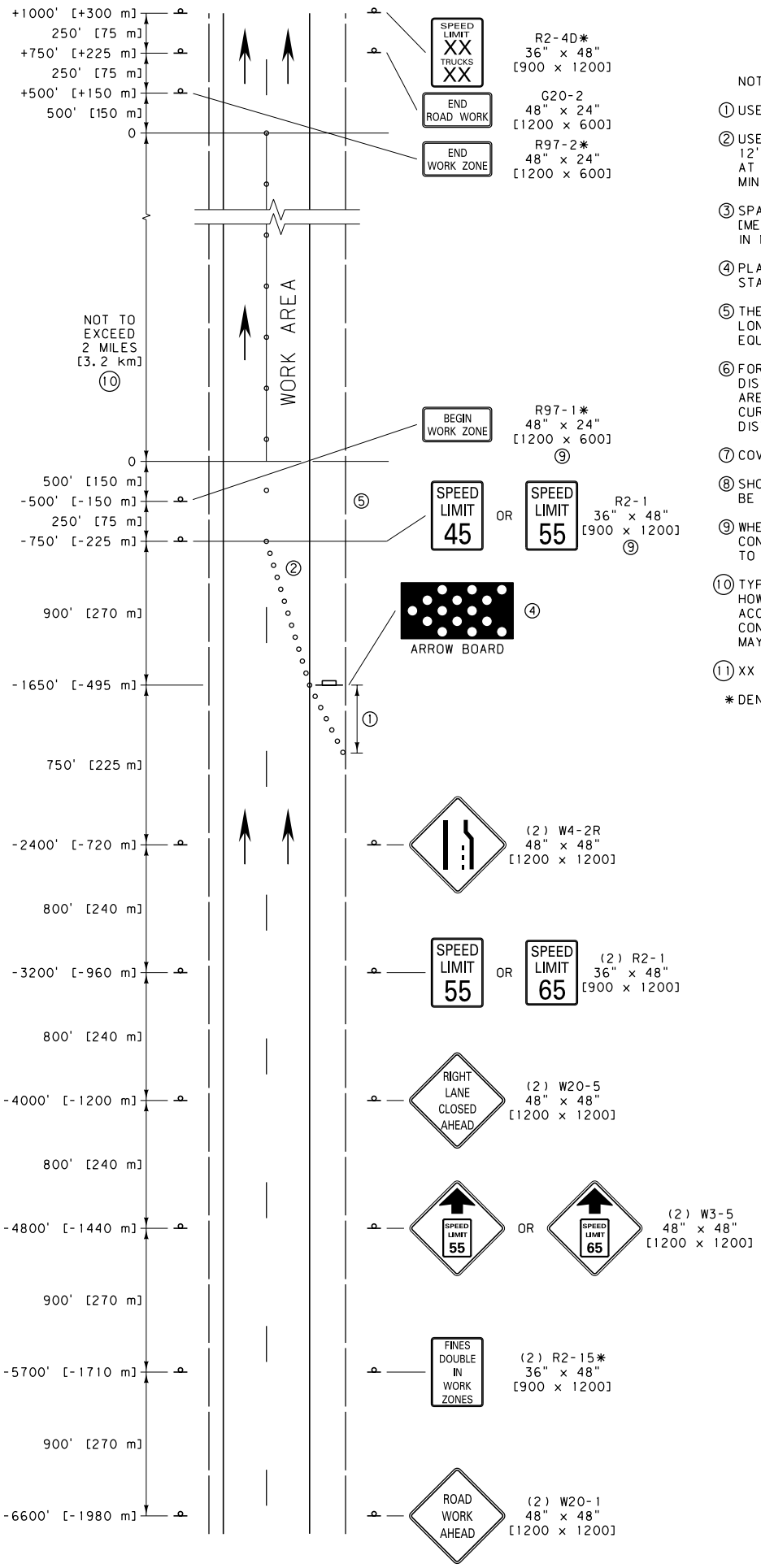

NOTES:

1. USE A MINIMUM 300' [90 m] SHOULDER TAPER.
2. USE THIRTEEN APPROVED CHANNELIZING DEVICES FOR A 12' [3.6 m] LANE CLOSURE TAPER (75 M.P.H. SPACED AT 75' [22.5 m].) ASSURE THAT THE TAPER IS A MINIMUM LENGTH OF 900' [270 m].
3. SPACE CHANNELIZING DEVICES AT INTERVALS IN FEET [METERS] EQUAL TO TWICE [0.6 TIMES] THE SPEED LIMIT IN M.P.H. THROUGH THE BUFFER AND WORK AREA.
4. PLACE THE ARROW BOARD ON THE SHOULDER AT THE START OF THE TRAVEL LANE CLOSURE TAPER.
5. THE BUFFER SPACE CAN BE LATERAL AND LONGITUDINAL. KEEP THE BUFFER SPACE CLEAR OF EQUIPMENT AND PERSONNEL.
6. FOR MORE INFORMATION OR CLARIFICATION CONTACT THE DISTRICT TRAFFIC ENGINEER. FOR EXAMPLE, IF WORK AREA IS CLOSE TO A HORIZONTAL CURVE, A VERTICAL CURVE, A BRIDGE, INTERCHANGE, POOR SIGHT DISTANCE OR OTHER SPECIAL CONDITION.
7. COVER ANY CONFLICTING SIGNS IN THE WORK AREA.
8. SHORT-TERM WORK ZONE SIGNING IS NOT REQUIRED TO BE POST MOUNTED.
9. WHEN THE WORK ZONE CHANGES WITHIN THE CONSTRUCTION ZONE, THESE SIGNS SHOULD BE MOVED TO REFLECT THE ACTUAL WORK ZONE.
10. TYPICALLY 2 MILES [3.2 km] IS THE MAX. WORK AREA. HOWEVER, WHEN SIGHT DISTANCE, BUFFER ZONES OR ACCOMPLISHMENT RATES FOR EQUIPMENT ARE CONSIDERED, SOME MINOR ADJUSTMENTS TO THIS MAX. MAY BE CONSIDERED.
11. XX = NORMAL POSTED SPEED LIMIT(S).

* DENOTES SIGNS THAT ARE UNIQUE TO MONTANA.

UNITS SHOWN IN BRACKETS [] ARE METRIC AND ARE IN MILLIMETERS (mm) UNLESS OTHER UNITS ARE SHOWN.

DETAILED DRAWING	
REFERENCE STANDARD SPEC. SECTION 618	DWG. NO. 618-M3
MAINTENANCE GUIDELINE FOR SHORT-TERM LANE CLOSURE ON INTERSTATE	
EFFECTIVE: SEPTEMBER 2014	
MDT MONTANA DEPARTMENT OF TRANSPORTATION	

MOBILE OPERATIONS ON MULTILANE ROAD

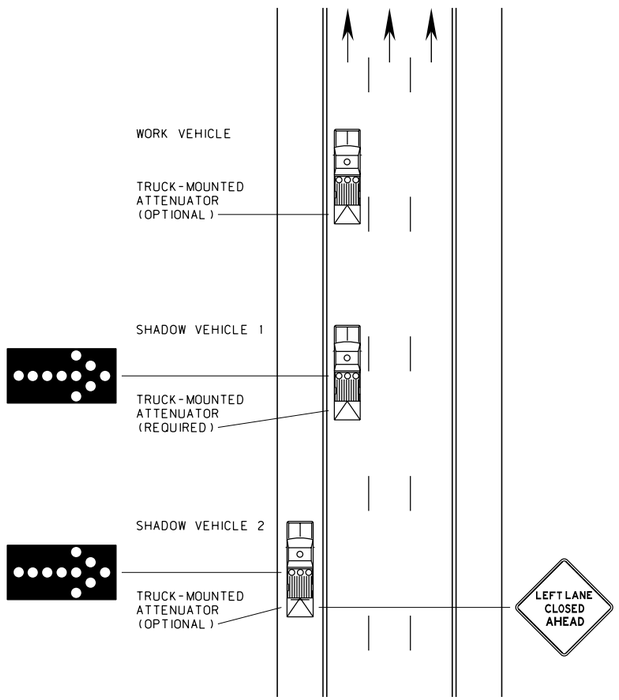

NOTES:

1. PLACE APPROPRIATE LANE CLOSURE SIGN ON SHADOW VEHICLE 2 SO AS NOT TO OBSCURE THE ARROW BOARD.
2. FOLLOW THE WORK OPERATION WITH SHADOW VEHICLE 2 SO AS TO PROVIDE ADEQUATE SIGHT DISTANCE FOR VEHICULAR TRAFFIC APPROACHING FROM THE REAR.
3. COVER OR TURN THE SIGN LEGENDS ON VEHICLE-MOUNTED SIGNS FROM VIEW WHEN WORK IS NOT IN PROGRESS.
4. WHEN THE WORK VEHICLE OCCUPIES AN INTERIOR LANE OF A DIRECTIONAL ROADWAY HAVING A RIGHT SHOULDER 10 FEET [3 m] OR MORE IN WIDTH, DRIVE SHADOW VEHICLE 2 ALONG THE RIGHT-HAND SHOULDER WITH A SIGN INDICATING WORK IS TAKING PLACE IN THE INTERIOR LANE.
5. ON HIGH-SPEED ROADWAYS, A THIRD SHADOW VEHICLE MAY BE USED WITH SHADOW VEHICLE 1 IN THE CLOSED LANE, SHADOW VEHICLE 2 STRADDLING THE EDGE LINE, AND SHADOW VEHICLE 3 ON THE SHOULDER. WHERE ADEQUATE SHOULDER WIDTH IS NOT AVAILABLE, SHADOW VEHICLE 3 MAY ALSO STRADDLE THE EDGE LINE.
6. THE MINIMUM ARROW BOARD SIZE IS TYPE B, 60 INCHES X 30 INCHES [1500 X 750].
7. VARY THE DISTANCE BETWEEN THE WORK LOCATION AND SHADOW VEHICLE 2 TO PROVIDE ADEQUATE SIGHT DISTANCE FOR VEHICULAR TRAFFIC APPROACHING FROM THE REAR.
8. MAINTAIN A MINIMUM SPACING BETWEEN THE WORK VEHICLE AND SHADOW VEHICLES, AND BETWEEN EACH SHADOW VEHICLE TO DETER ROAD USERS FROM DRIVING IN BETWEEN.

MOBILE OPERATIONS ON TWO-LANE ROAD

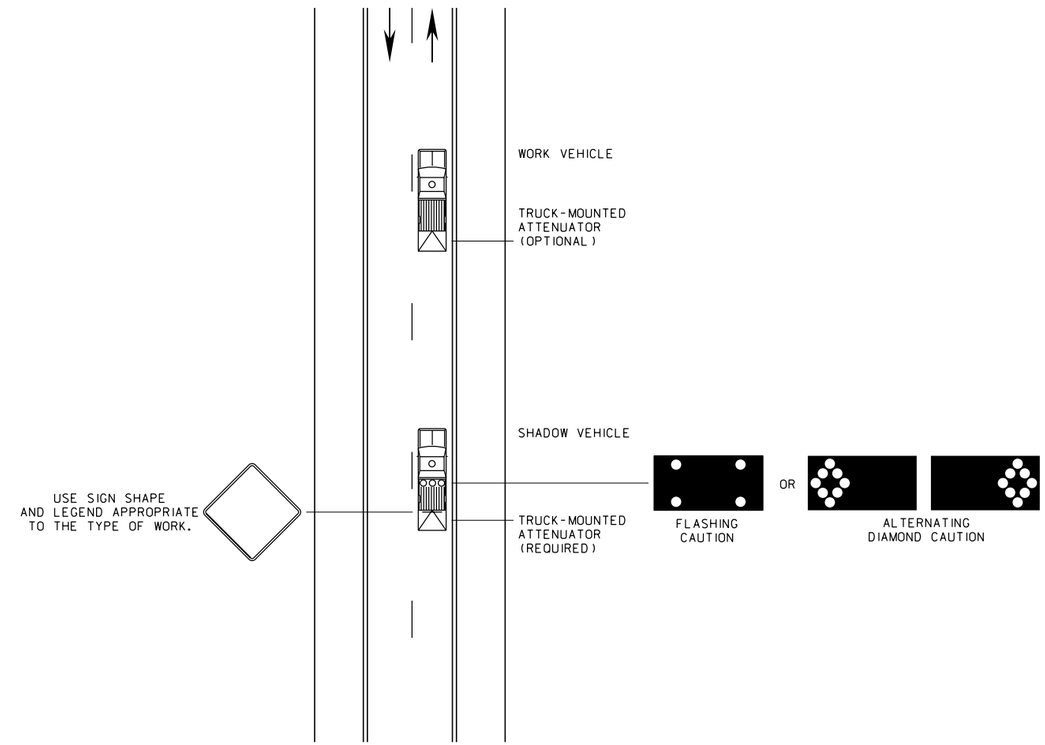

NOTES:

1. TRUCK-MOUNTED ATTENUATOR IS REQUIRED FOR SHADOW VEHICLE.
2. EQUIP SHADOW VEHICLE WITH VEHICLE-MOUNTED SIGN. USE SIGN SHAPE AND LEGEND APPROPRIATE TO THE TYPE OF WORK.
3. MOUNT VEHICLE-MOUNTED SIGN IN A MANNER SO EQUIPMENT OR SUPPLIES DO NOT OBSCURE THE SIGN.
4. COVER OR TURN THE SIGN LEGENDS ON VEHICLE-MOUNTED SIGNS FROM VIEW WHEN WORK IS NOT IN PROGRESS.
5. WHENEVER ADEQUATE STOPPING SIGHT DISTANCE EXISTS TO THE REAR, MAINTAIN A MINIMUM DISTANCE FROM THE WORK VEHICLE WITH THE SHADOW VEHICLE AND PROCEED AT THE SAME SPEED.
6. SLOW DOWN THE SHADOW VEHICLE IN ADVANCE OF VERTICAL OR HORIZONTAL CURVES THAT RESTRICT SIGHT DISTANCE.

UNITS SHOWN IN BRACKETS [] ARE METRIC AND ARE IN MILLIMETERS (mm) UNLESS OTHER UNITS ARE SHOWN.

DETAILED DRAWING	
REFERENCE STANDARD SPEC. SECTION 618	DWG. NO. 618-M4
MOBILE OPERATIONS	
EFFECTIVE: SEPTEMBER 2014	
MDT MONTANA DEPARTMENT OF TRANSPORTATION	

POSTED SPEED LIMIT FOR WORK ZONE	SIGN SPACING (A)	SPACING OF CHANNELIZING DEVICES (MAX.) (G) ✱✱	BUFFER SPACE ④ (B)
(M.P.H.)	FEET [m]	FEET [m]	FEET [m]
25	100 [30]	25 [8]	50 [15]
35	100 [30]	35 [12]	100 [30]

✱✱ SPACE ALL CHANNELIZING DEVICES AT "G" UNLESS OTHERWISE NOTED.

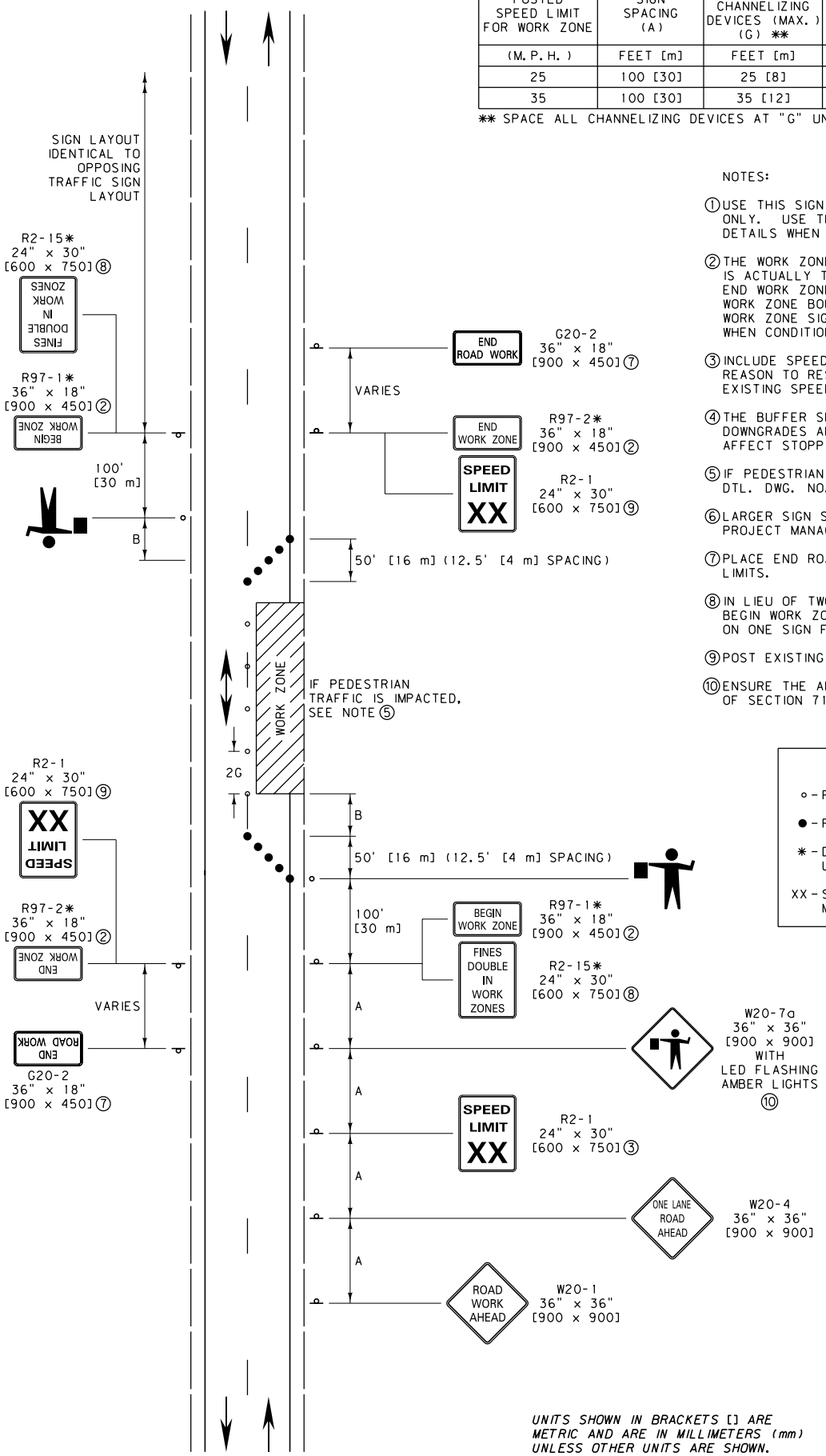

NOTES:

① USE THIS SIGN LAYOUT IN URBAN APPLICATIONS ONLY. USE THE RURAL, OPEN ROADWAY SIGNING DETAILS WHEN HIGHER SPEED LIMITS ARE USED.

② THE WORK ZONE REFERS TO THE AREA WHERE WORK IS ACTUALLY TAKING PLACE. KEEP THE BEGIN AND END WORK ZONE SIGNS WITHIN 500' [150 m] OF THE WORK ZONE BOUNDARY. INCLUDE THE BEGIN AND END WORK ZONE SIGNS WHEN WORK IS IN PROGRESS OR WHEN CONDITIONS WARRANT.

③ INCLUDE SPEED LIMIT SIGNS ONLY IF THERE IS A REASON TO RESTRICT SPEED. COVER CONFLICTING EXISTING SPEED LIMIT SIGNS.

④ THE BUFFER SPACE MAY BE INCREASED FOR DOWNGRADES AND OTHER CONDITIONS THAT AFFECT STOPPING DISTANCE.

⑤ IF PEDESTRIAN TRAFFIC IS IMPACTED SEE DTL. DWG. NO. 618-U05.

⑥ LARGER SIGN SIZES MAY BE APPROVED BY THE PROJECT MANAGER.

⑦ PLACE END ROADWORK SIGN AT END OF PROJECT LIMITS.

⑧ IN LIEU OF TWO SIGNS, THE FINES DOUBLE AND BEGIN WORK ZONE SIGNS CAN BE COMBINED ON ONE SIGN FACE.

⑨ POST EXISTING SPEED LIMIT IF CHANGED BY WORK ZONE.

⑩ ENSURE THE AMBER LED FLASHERS MEET REQUIREMENTS OF SECTION 715 AND DTL. DWG. NO. 618-01.

LEGEND

○ - FLEXIBLE GUIDE POSTS

● - PLASTIC DRUMS

✱ - DENOTES SIGNS THAT ARE UNIQUE TO MONTANA.

XX - SPEED DETERMINED BY THE PROJECT MANAGER. (25 M.P.H. OR 35 M.P.H.)

UNITS SHOWN IN BRACKETS [] ARE METRIC AND ARE IN MILLIMETERS (mm) UNLESS OTHER UNITS ARE SHOWN.

DETAILED DRAWING

REFERENCE STANDARD SPEC. SECTION 618

DWG. NO. 618-U01

LANE CLOSURE-FLAGGER CONTROLLED (URBAN TWO LANE, TWO WAY ROAD)

EFFECTIVE: SEPTEMBER 2014

MDT MONTANA DEPARTMENT OF TRANSPORTATION

POSTED SPEED LIMIT FOR WORK ZONE	SIGN SPACING (A)	TAPER LENGTH (L)	SPACING OF CHANNELIZING DEVICES (MAX.) (G) ✱✱	BUFFER SPACE ④ (B)
(M.P.H.)	FEET [m]	FEET [m]	FEET [m]	FEET [m]
25	100 [30]	125 [40]	25 [8]	50 [15]
35	100 [30]	245 [84]	35 [12]	100 [30]

✱✱ SPACE ALL CHANNELIZING DEVICES AT "G" UNLESS OTHERWISE NOTED.

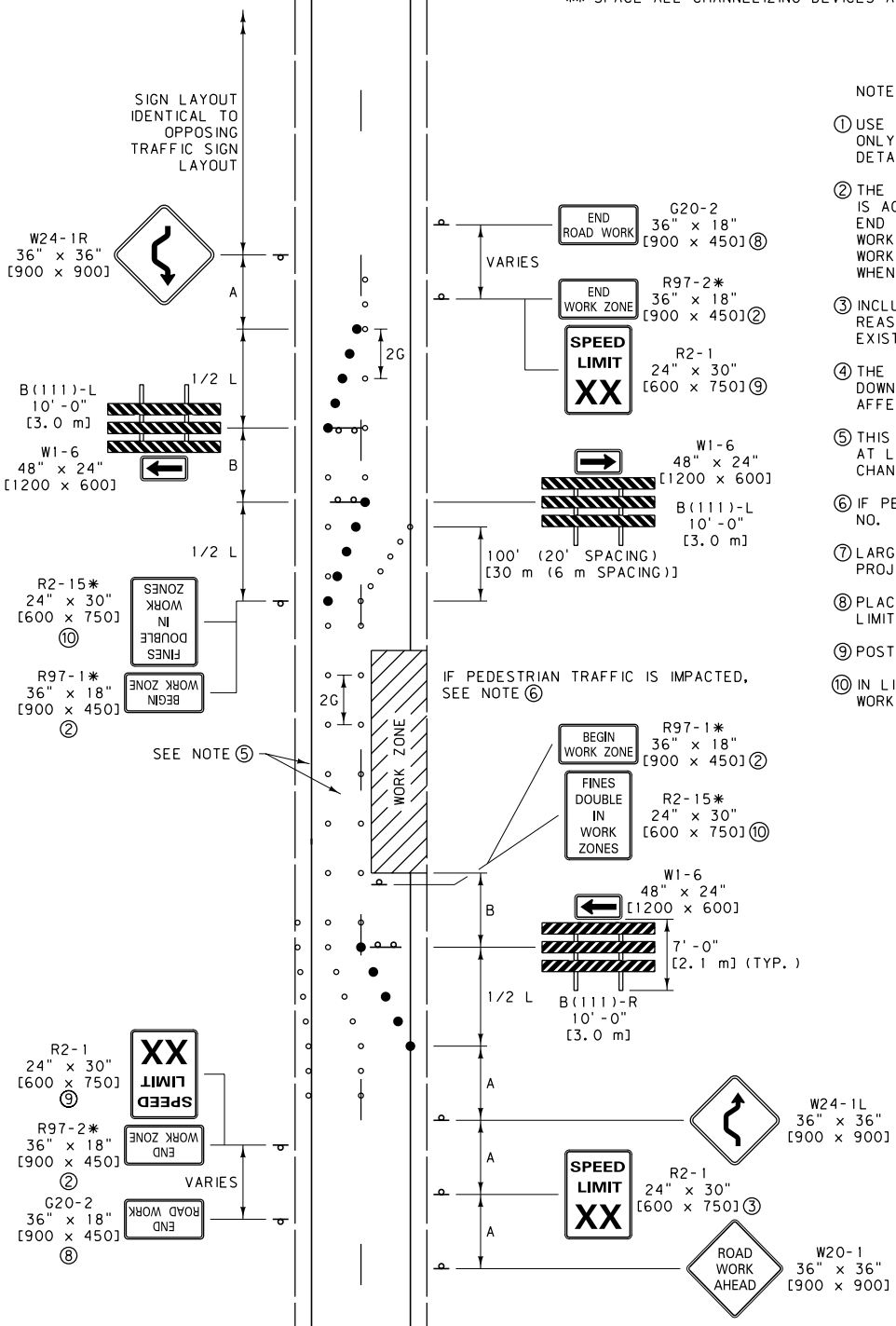

NOTES:

① USE THIS SIGN LAYOUT IN URBAN APPLICATIONS ONLY. USE THE RURAL, OPEN ROADWAY SIGNING DETAILS WHEN HIGHER SPEED LIMITS ARE USED.

② THE WORK ZONE REFERS TO THE AREA WHERE WORK IS ACTUALLY TAKING PLACE. KEEP THE BEGIN AND END WORK ZONE SIGNS WITHIN 500' [150 m] OF THE WORK ZONE BOUNDARY. INCLUDE THE BEGIN AND END WORK ZONE SIGNS WHEN WORK IS IN PROGRESS OR WHEN CONDITIONS WARRANT.

③ INCLUDE SPEED LIMIT SIGNS ONLY IF THERE IS A REASON TO RESTRICT SPEED. COVER CONFLICTING EXISTING SPEED LIMIT SIGNS.

④ THE BUFFER SPACE MAY BE INCREASED FOR DOWNGRADES AND OTHER CONDITIONS THAT AFFECT STOPPING DISTANCE.

⑤ THIS LAYOUT SHOULD ONLY BE USED WHEN THERE IS AT LEAST 10' [3.0 m] IN WIDTH BETWEEN THE CHANNELIZING DEVICES AND THE EDGE OF PAVEMENT.

⑥ IF PEDESTRIAN TRAFFIC IS IMPACTED SEE DTL. DWG. NO. 618-U05.

⑦ LARGER SIGN SIZES MAY BE APPROVED BY THE PROJECT MANAGER.

⑧ PLACE END ROAD WORK SIGNS AT END OF PROJECT LIMITS.

⑨ POST EXISTING SPEED LIMIT IF CHANGED BY WORK ZONE.

⑩ IN LIEU OF TWO SIGNS, THE FINES DOUBLE AND BEGIN WORK ZONE SIGNS CAN BE COMBINED ON ONE SIGN FACE.

LEGEND

○ - FLEXIBLE GUIDE POSTS

● - PLASTIC DRUMS

✱ - DENOTES SIGNS THAT ARE UNIQUE TO MONTANA.

XX - SPEED DETERMINED BY THE PROJECT MANAGER. (25 M.P.H. OR 35 M.P.H.)

UNITS SHOWN IN BRACKETS [] ARE METRIC AND ARE IN MILLIMETERS (mm) UNLESS OTHER UNITS ARE SHOWN.

DETAILED DRAWING

REFERENCE STANDARD SPEC. SECTION 618

DWG. NO. 618-U02

WORK ZONE OCCUPIES ONE HALF OF ROAD (LOW SPEED URBAN TWO-LANE, TWO-WAY ROAD)

EFFECTIVE: SEPTEMBER 2014

MDT MONTANA DEPARTMENT OF TRANSPORTATION

POSTED SPEED LIMIT FOR WORK ZONE	SIGN SPACING (A)	TAPER LENGTH (L)	SPACING OF CHANNELIZING DEVICES (MAX.) (G) ✱✱	BUFFER SPACE ④ (B)
(M.P.H.)	FEET [m]	FEET [m]	FEET [m]	FEET [m]
25	100 [30]	125 [40]	25 [8]	50 [15]
35	100 [30]	245 [84]	35 [12]	100 [30]

✱✱ SPACE ALL CHANNELIZING DEVICES AT "G" UNLESS OTHERWISE NOTED.

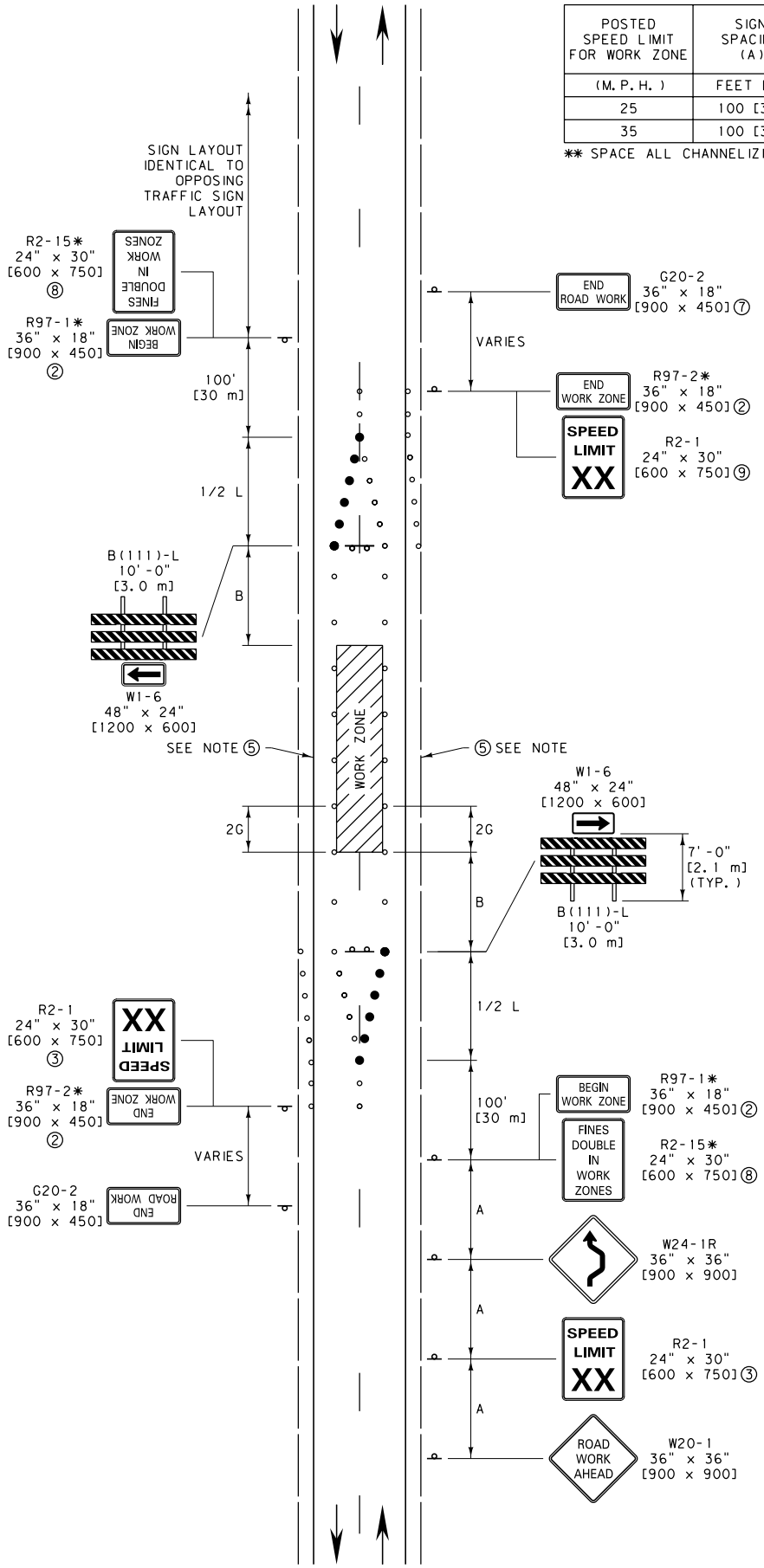

NOTES:

① USE THIS SIGN LAYOUT IN URBAN APPLICATIONS ONLY. USE THE RURAL, OPEN ROADWAY SIGNING DETAILS WHEN HIGHER SPEED LIMITS ARE USED.

② THE WORK ZONE REFERS TO THE AREA WHERE WORK IS ACTUALLY TAKING PLACE. KEEP THE BEGIN AND END WORK ZONE SIGNS WITHIN 500' [150 m] OF THE WORK ZONE BOUNDARY. INCLUDE THE BEGIN AND END WORK ZONE SIGNS WHEN WORK IS IN PROGRESS OR WHEN CONDITIONS WARRANT.

③ INCLUDE SPEED LIMIT SIGNS ONLY IF THERE IS A REASON TO RESTRICT SPEED. COVER CONFLICTING EXISTING SPEED LIMIT SIGNS

④ THE BUFFER SPACE MAY BE INCREASED FOR DOWNGRADES AND OTHER CONDITIONS THAT AFFECT STOPPING DISTANCE.

⑤ THIS LAYOUT SHOULD ONLY BE USED WHEN THERE IS AT LEAST 10' [3 m] IN WIDTH BETWEEN THE CHANNELIZING DEVICES AND THE EDGE OF PAVEMENT. PROVIDE NO PARKING SIGNS WHEN APPROPRIATE.

⑥ LARGER SIGNS MAY BE APPROVED BY THE PROJECT MANAGER.

⑦ PLACE END ROAD WORK SIGNS AT END OF PROJECT LIMITS.

⑧ IN LIEU OF TWO SIGNS, THE FINES DOUBLE AND BEGIN WORK ZONE SIGNS CAN BE COMBINED ON ONE SIGN FACE.

⑨ POST EXISTING SPEED LIMIT IF CHANGED BY WORK ZONE.

LEGEND

○ - FLEXIBLE GUIDE POSTS

● - PLASTIC DRUMS

✱ - DENOTES SIGNS THAT ARE UNIQUE TO MONTANA.

XX - SPEED DETERMINED BY THE PROJECT MANAGER. (25 M.P.H. OR 35 M.P.H.)

UNITS SHOWN IN BRACKETS [] ARE METRIC AND ARE IN MILLIMETERS (mm) UNLESS OTHER UNITS ARE SHOWN.

DETAILED DRAWING

REFERENCE STANDARD SPEC. SECTION 618

DWG. NO. 618-U03

WORK ZONE IN CENTER OF ROAD (URBAN TWO-LANE, TWO-WAY ROAD)

EFFECTIVE: SEPTEMBER 2014

MDT MONTANA DEPARTMENT OF TRANSPORTATION

NOTES:

① MINIMAL TRAFFIC CONTROL DEVICES CONTROLLING PEDESTRIAN FLOWS ARE SHOWN. OTHER DEVICES MAY BE NEEDED TO CONTROL TRAFFIC ON THE STREETS. USE THE APPROPRIATE PARKING LANE CLOSURE WHEN NEEDED.

② DO NOT DIRECT PEDESTRIANS INTO A LANE OF MOVING TRAFFIC.

③ WHERE SPEEDS EXCEED 25 M.P.H., PHYSICAL BARRIERS SHOULD BE USED TO SEPARATE THE TEMPORARY WALKWAY FROM VEHICULAR TRAFFIC. FLEXIBLE GUIDE POSTS WITH DETECTABLE EDGING IS THE MINIMUM REQUIREMENT FOR SEPARATION. PROVIDE LARGER PHYSICAL BARRIERS, AS DETERMINED BY THE PROJECT MANAGER, ON A CASE BY CASE BASIS.

④ SEE DTL. DWG. NO. 618-03.

⑤ PROVIDE A PHYSICAL BARRIER, WITH A MINIMUM 6 INCH [150 mm] HEIGHT DETECTABLE EDGING, BETWEEN THE PEDESTRIAN DETOUR WALKWAY AND THE WORK ZONE. PROVIDE LARGER PHYSICAL BARRIERS TO PROTECT PEDESTRIANS FROM HAZARDS IN THE WORK ZONE, AS DETERMINED BY THE PROJECT MANAGER.

⑥ ENSURE THAT ENTIRE WALKWAY MEETS ADA REQUIREMENTS. PROVIDE A MINIMUM WALKWAY WIDTH OF 5 FEET [1525 mm] AND A FIRM, STABLE, SLIP RESISTANT WALKING SURFACE ALONG ENTIRE WALKWAY.

⑦ PROVIDE TEMPORARY RAMPS AND DETECTABLE EDGING (MINIMUM 6 INCH HEIGHT [150 mm] ON BOTH SIDES OF WALKWAY) ALONG TEMPORARY PEDESTRIAN DETOUR ROUTE. SEE MUTCD FOR ADDITIONAL GUIDANCE.

⑧ PLACE R9-11 ON SIGN POSTS (AS SHOWN BELOW) IF BUSINESS ACCESS IS REQUIRED. PLACE TYPE I BARRICADE ON SIDEWALK WITH R9-11 SIGN IF BUSINESS ACCESS IS NOT REQUIRED.

⑨ PLACE TYPE I BARRICADE ON SIDEWALK WITH R9-9 SIGN.

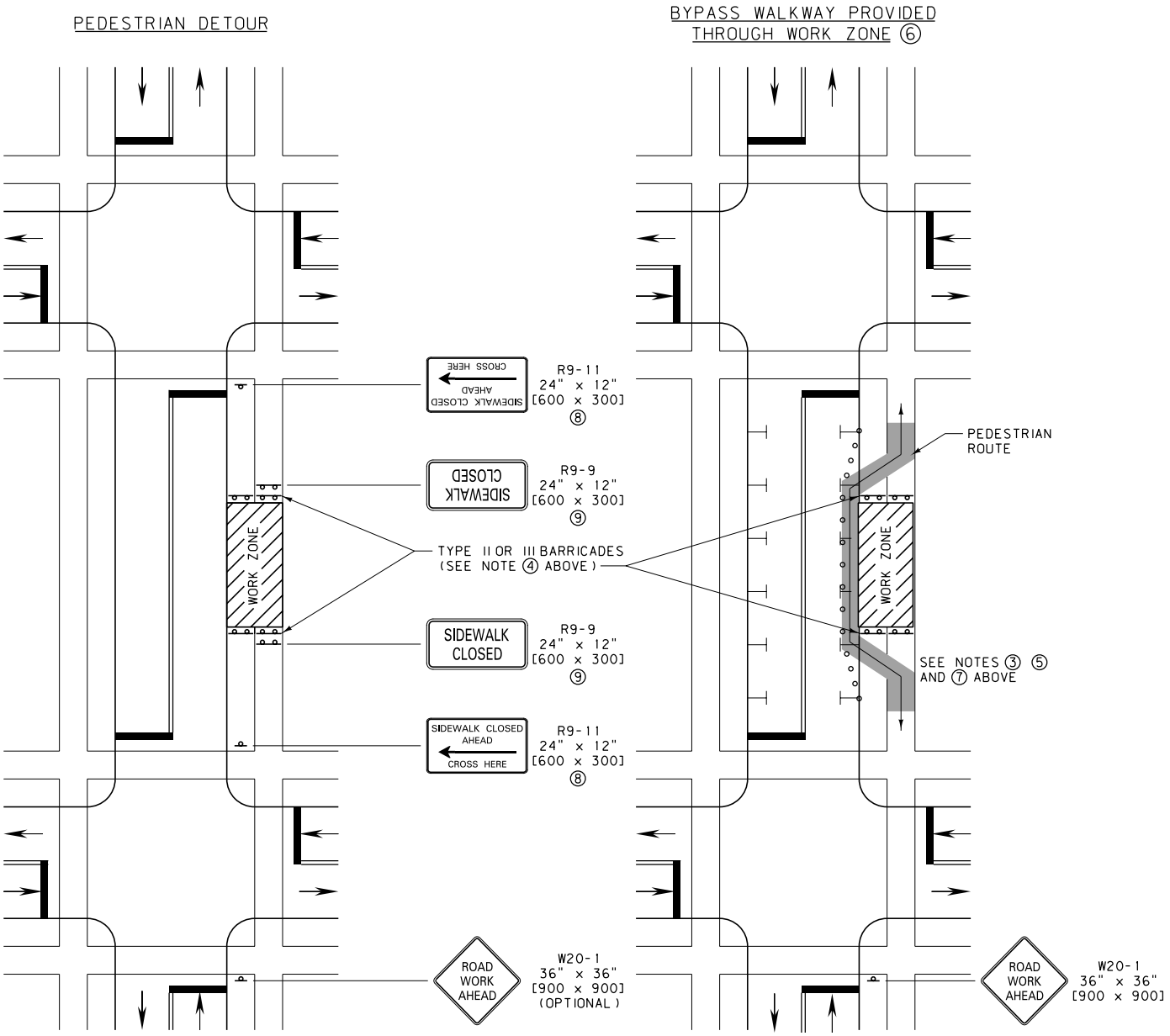

LEGEND

∘ - FLEXIBLE GUIDE POSTS

UNITS SHOWN IN BRACKETS [] ARE METRIC AND ARE IN MILLIMETERS (mm) UNLESS OTHER UNITS ARE SHOWN.

DETAILED DRAWING

REFERENCE STANDARD SPEC. SECTION 618

DWG. NO. 618-U05

SIDEWALK CLOSURES AND BYPASS WALKWAY

EFFECTIVE: SEPTEMBER 2014

MDT MONTANA DEPARTMENT OF TRANSPORTATION

NOTES:

① COVER PEDESTRIAN TRAFFIC SIGNAL DISPLAYS CONTROLLING CLOSED CROSSWALKS.

② ONLY TRAFFIC CONTROL DEVICES CONTROLLING PEDESTRIAN FLOWS ARE SHOWN. OTHER DEVICES MAY BE NEEDED TO CONTROL TRAFFIC ON THE STREETS.

③ SEE DTL. DWG. NO. 618-03.

④ WHEN POSSIBLE, USE THE EXISTING INTERSECTION CROSSWALKS FOR PEDESTRIAN DETOURS. AS A LAST OPTION, USE THE MID-BLOCK TEMPORARY PEDESTRIAN CROSSING SHOWN BELOW. FOR LONG-TERM STATIONARY WORK, THE DOUBLE YELLOW CENTERLINE AND/OR LANE LINES ARE REMOVED BETWEEN CROSSWALK LINES. PROVIDE A MINIMUM WALKWAY WIDTH OF 5 FEET [1525 mm] AND A FIRM, STABLE, SLIP RESISTANT WALKING SURFACE ACROSS BOULEVARDS AND OTHER AREAS ALONG THE TEMPORARY PEDESTRIAN WALKWAY. PROVIDE YIELD PAVEMENT MARKINGS AS SHOWN BELOW.

⑤ PLACE R9-9 AND R9-10 SIGNS ON TYPE I BARRICADES ON SIDEWALK.

⑥ PROVIDE TEMPORARY RAMPS FOR PEDESTRIAN CROSSWALK WHEN REQUIRED.

⑦ PLACE R9-11 AND R9-11a ON SIGN POSTS (AS SHOWN BELOW) IF BUSINESS ACCESS IS REQUIRED. PLACE TYPE I BARRICADE ON SIDEWALK WITH R9-11 OR R9-11a SIGN IF BUSINESS ACCESS IS NOT REQUIRED.

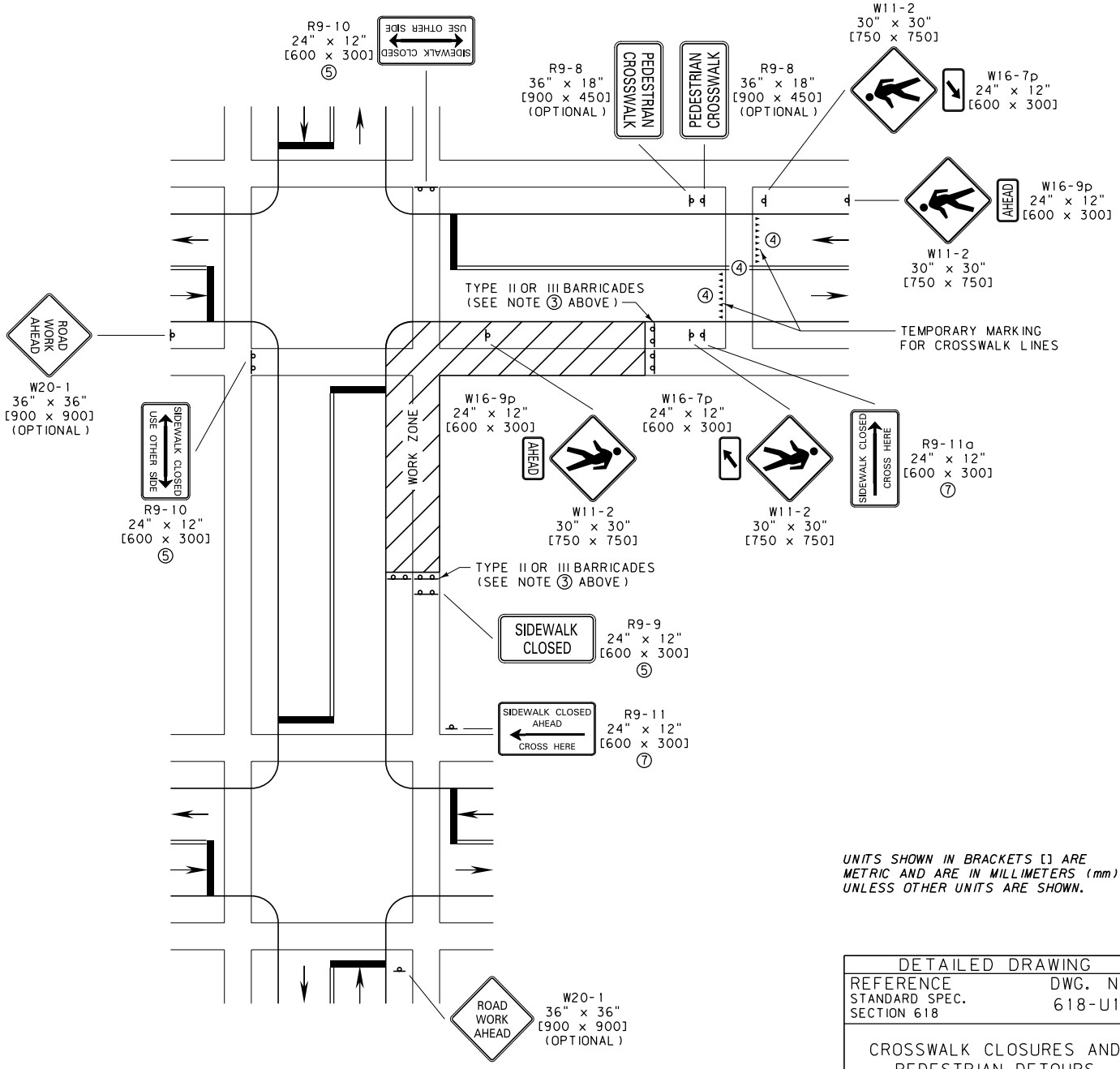

UNITS SHOWN IN BRACKETS [] ARE METRIC AND ARE IN MILLIMETERS (mm) UNLESS OTHER UNITS ARE SHOWN.

DETAILED DRAWING	
REFERENCE STANDARD SPEC. SECTION 618	DWG. NO. 618-U10
CROSSWALK CLOSURES AND PEDESTRIAN DETOURS	
EFFECTIVE: SEPTEMBER 2014	
MDT MONTANA DEPARTMENT OF TRANSPORTATION	

POSTED SPEED LIMIT FOR WORK ZONE	SIGN SPACING (A)	TAPER LENGTH (L)	SPACING OF CHANNELIZING DEVICES (MAX.) (G) ✱✱	BUFFER SPACE ④ (B)
(M.P.H.)	FEET [m]	FEET [m]	FEET [m]	FEET [m]
25	100 [30]	125 [40]	25 [8]	50 [15]
35	100 [30]	245 [84]	35 [12]	100 [30]

✱✱ SPACE ALL CHANNELIZING DEVICES AT "G" UNLESS OTHERWISE NOTED.

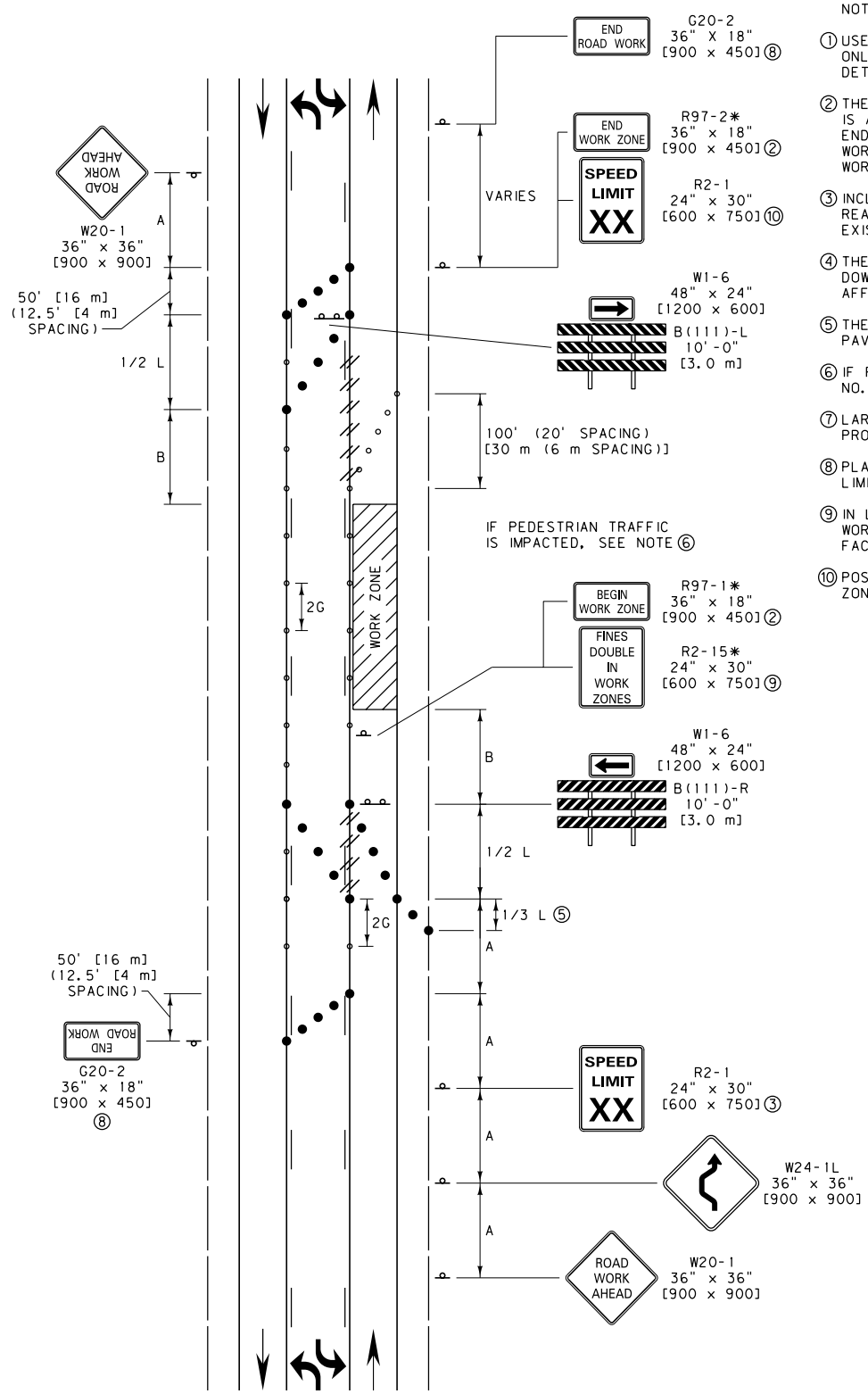

NOTES:

① USE THIS SIGN LAYOUT IN URBAN APPLICATIONS ONLY. USE THE RURAL, OPEN ROADWAY SIGNING DETAILS WHEN HIGHER SPEED LIMITS ARE USED.

② THE WORK ZONE REFERS TO THE AREA WHERE WORK IS ACTUALLY TAKING PLACE. KEEP THE BEGIN AND END WORK ZONE SIGNS WITHIN 500' [150 m] OF THE WORK ZONE BOUNDARY. INCLUDE THE BEGIN AND END WORK ZONE SIGNS WHEN WORK IS IN PROGRESS.

③ INCLUDE SPEED LIMIT SIGNS ONLY IF THERE IS A REASON TO RESTRICT SPEED. COVER OR REMOVE EXISTING CONFLICTING SIGNS.

④ THE BUFFER SPACE MAY BE INCREASED FOR DOWNGRADES AND OTHER CONDITIONS THAT AFFECT STOPPING DISTANCE.

⑤ THE SHOULDER TAPER MAY BE OMITTED WHEN THE PAVED SHOULDER IS LESS THAN 8' [2.4 m] IN WIDTH.

⑥ IF PEDESTRIAN TRAFFIC IS IMPACTED SEE DTL. DWG. NO. 618-U05.

⑦ LARGER SIGN SIZES MAY BE APPROVED BY THE PROJECT MANAGER.

⑧ PLACE END ROAD WORK SIGNS AT END OF PROJECT LIMITS.

⑨ IN LIEU OF TWO SIGNS, THE FINES DOUBLE AND BEGIN WORK ZONE SIGNS CAN BE PLACED ON ONE SIGN FACE.

⑩ POST EXISTING SPEED LIMIT IF CHANGED BY WORK ZONE.

LEGEND

○ - FLEXIBLE GUIDE POSTS

● - PLASTIC DRUMS

✱ - DENOTES SIGNS THAT ARE UNIQUE TO MONTANA.

XX - SPEED DETERMINED BY THE PROJECT MANAGER. (25 M.P.H. OR 35 M.P.H.)

// - OBLITERATE CONFLICTING PAVEMENT MARKINGS WHEN WORK OPERATION IS LONGER THAN 3 DAYS. (DO NOT REMOVE THERMOPLASTIC)

UNITS SHOWN IN BRACKETS [] ARE METRIC AND ARE IN MILLIMETERS (mm) UNLESS OTHER UNITS ARE SHOWN.

DETAILED DRAWING

REFERENCE STANDARD SPEC. SECTION 618

DWG. NO. 618-U15

LANE CLOSURE (URBAN TWO-LANE, TWO-WAY ROAD WITH TWO-WAY LEFT TURN LANE)

EFFECTIVE: SEPTEMBER 2014

MDT MONTANA DEPARTMENT OF TRANSPORTATION

POSTED SPEED LIMIT FOR WORK ZONE	SIGN SPACING (A)	TAPER LENGTH (L)	SPACING OF CHANNELIZING DEVICES (MAX.) (G) ✱✱	BUFFER SPACE ④ (B)
(M.P.H.)	FEET [m]	FEET [m]	FEET [m]	FEET [m]
25	100 [30]	125 [40]	25 [8]	50 [15]
35	100 [30]	245 [84]	35 [12]	100 [30]

✱✱ SPACE ALL CHANNELIZING DEVICES AT "G" UNLESS OTHERWISE NOTED.

NOTES:

① USE THIS SIGN LAYOUT IN URBAN APPLICATIONS ONLY. USE THE RURAL, OPEN ROADWAY SIGNING DETAILS WHEN HIGHER SPEED LIMITS ARE USED.

② THE WORK ZONE REFERS TO THE AREA WHERE WORK IS ACTUALLY TAKING PLACE. KEEP THE BEGIN AND END WORK ZONE SIGNS WITHIN 500' [150 m] OF THE WORK ZONE BOUNDARY. INCLUDE THE BEGIN AND END WORK ZONE SIGNS WHEN WORK IS IN PROGRESS.

③ INCLUDE SPEED LIMIT SIGNS ONLY IF THERE IS A REASON TO RESTRICT SPEED. COVER OR REMOVE CONFLICTING EXISTING SPEED LIMIT SIGNS.

④ THE BUFFER SPACE MAY BE INCREASED FOR DOWNGRADES AND OTHER CONDITIONS THAT AFFECT STOPPING DISTANCE.

⑤ LARGER SIGN SIZES MAY BE APPROVED BY THE PROJECT MANAGER.

⑥ PLACE END ROAD WORK SIGNS AT END OF PROJECT LIMITS.

⑦ IN LIEU OF TWO SIGNS, THE FINES DOUBLE AND BEGIN WORK ZONE SIGNS CAN BE COMBINED ON ONE SIGN FACE.

⑧ POST EXISTING SPEED LIMIT IF CHANGED BY WORK ZONE.

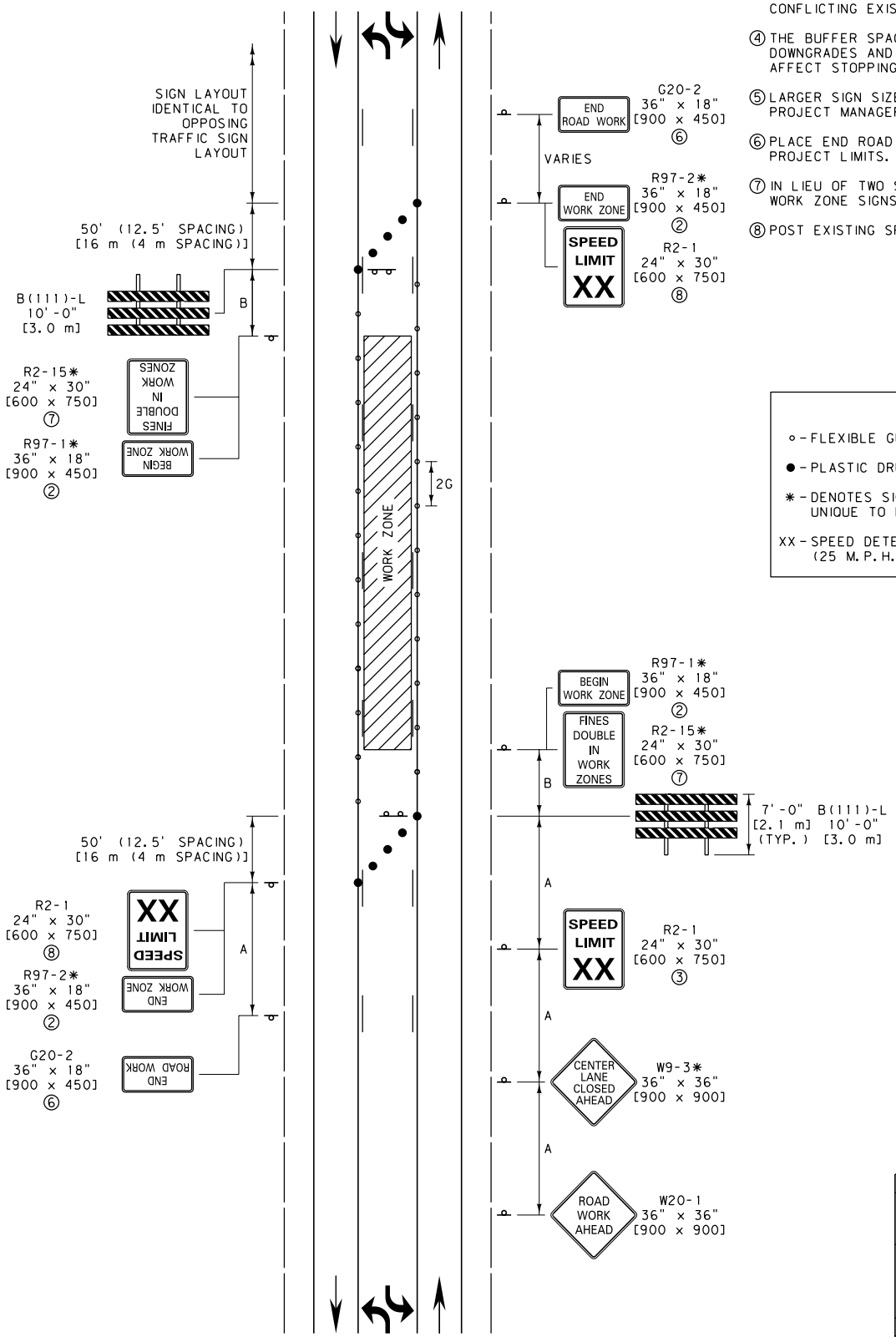

LEGEND

○ - FLEXIBLE GUIDE POSTS

● - PLASTIC DRUMS

✱ - DENOTES SIGNS THAT ARE UNIQUE TO MONTANA.

XX - SPEED DETERMINED BY THE PROJECT MANAGER. (25 M.P.H. OR 35 M.P.H.)

UNITS SHOWN IN BRACKETS [] ARE METRIC AND ARE IN MILLIMETERS (mm) UNLESS OTHER UNITS ARE SHOWN.

DETAILED DRAWING

REFERENCE STANDARD SPEC. SECTION 618

DWG. NO. 618-U16

TURN LANE CLOSURE (URBAN TWO-LANE, TWO-WAY ROAD WITH TWO-WAY LEFT TURN LANE)

EFFECTIVE: SEPTEMBER 2014

MDT MONTANA DEPARTMENT OF TRANSPORTATION

POSTED SPEED LIMIT FOR WORK ZONE	SIGN SPACING (A)	TAPER LENGTH (L)	SPACING OF CHANNELIZING DEVICES (MAX.) (G) **	BUFFER SPACE ④ (B)
(M.P.H.)	FEET [m]	FEET [m]	FEET [m]	FEET [m]
25	100 [30]	125 [40]	25 [8]	50 [15]
35	100 [30]	245 [84]	35 [12]	100 [30]

** SPACE ALL CHANNELIZING DEVICES AT "G" UNLESS OTHERWISE NOTED.

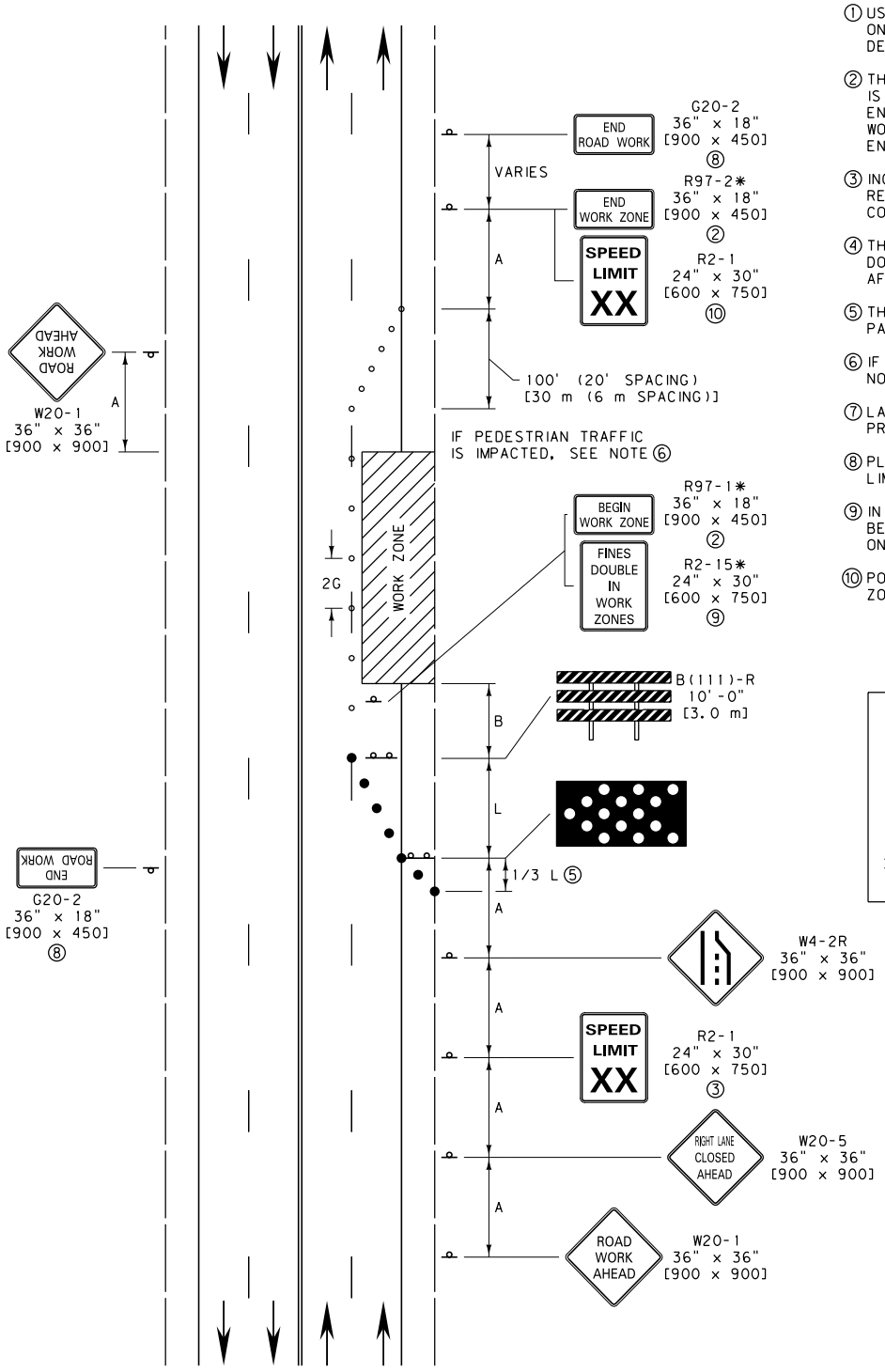

NOTES:

① USE THIS SIGN LAYOUT IN URBAN APPLICATIONS ONLY. USE THE RURAL, OPEN ROADWAY SIGNING DETAILS WHEN HIGHER SPEED LIMITS ARE USED.

② THE WORK ZONE REFERS TO THE AREA WHERE WORK IS ACTUALLY TAKING PLACE. KEEP THE BEGIN AND END WORK ZONE SIGNS WITHIN 500' [150 m] OF THE WORK ZONE BOUNDARY. INCLUDE THE BEGIN AND END WORK ZONE SIGNS WHEN WORK IS IN PROGRESS.

③ INCLUDE SPEED LIMIT SIGNS ONLY IF THERE IS A REASON TO RESTRICT SPEED. COVER OR REMOVE CONFLICTING EXISTING SPEED LIMIT SIGNS.

④ THE BUFFER SPACE MAY BE INCREASED FOR DOWNGRADES AND OTHER CONDITIONS THAT AFFECT STOPPING DISTANCE.

⑤ THE SHOULDER TAPER MAY BE OMMITTED WHEN PAVED SHOULDER IS LESS THAN 8' [2.4 m] IN WIDTH.

⑥ IF PEDESTRIAN TRAFFIC IS IMPACTED SEE DTL. DWG. NO. 618-U05.

⑦ LARGER SIGN SIZES MAY BE APPROVED BY THE PROJECT MANAGER.

⑧ PLACE END ROAD WORK SIGNS AT END OF PROJECT LIMITS.

⑨ IN LIEU OF TWO SIGNS, THE FINES DOUBLE AND BEGIN WORK ZONE SIGNS CAN BE COMBINED ON ONE SIGN FACE.

⑩ POST EXISTING SPEED LIMIT IF CHANGED BY WORK ZONE.

LEGEND

○ - FLEXIBLE GUIDE POSTS

● - PLASTIC DRUMS

* - DENOTES SIGNS THAT ARE UNIQUE TO MONTANA.

XX - SPEED DETERMINED BY THE PROJECT MANAGER. (25 M.P.H. OR 35 M.P.H.)

UNITS SHOWN IN BRACKETS [] ARE METRIC AND ARE IN MILLIMETERS (mm) UNLESS OTHER UNITS ARE SHOWN.

DETAILED DRAWING

REFERENCE STANDARD SPEC. SECTION 618

DWG. NO. 618-U20

RIGHT LANE CLOSURE (URBAN MULTI-LANE, UNDIVIDED ROAD)

EFFECTIVE: SEPTEMBER 2014

MDT MONTANA DEPARTMENT OF TRANSPORTATION

POSTED SPEED LIMIT FOR WORK ZONE	SIGN SPACING (A)	TAPER LENGTH (L)	SPACING OF CHANNELIZING DEVICES (MAX.) (G) ✱✱	BUFFER SPACE ④ (B)
(M.P.H.)	FEET [m]	FEET [m]	FEET [m]	FEET [m]
25	100 [30]	125 [40]	25 [8]	50 [15]
35	100 [30]	245 [84]	35 [12]	100 [30]

✱✱ SPACE ALL CHANNELIZING DEVICES AT "G" UNLESS OTHERWISE NOTED.

NOTES:

① USE THIS SIGN LAYOUT IN URBAN APPLICATIONS ONLY. USE THE RURAL, OPEN ROADWAY SIGNING DETAILS WHEN HIGHER SPEED LIMITS ARE USED.

② THE WORK ZONE REFERS TO THE AREA WHERE WORK IS ACTUALLY TAKING PLACE. KEEP THE BEGIN AND END WORK ZONE SIGNS WITHIN 500' [150 m] OF THE WORK ZONE BOUNDARY. INCLUDE THE BEGIN AND END WORK ZONE SIGNS WHEN WORK IS IN PROGRESS.

③ INCLUDE SPEED LIMIT SIGNS ONLY IF THERE IS A REASON TO RESTRICT SPEED. COVER OR REMOVE CONFLICTING EXISTING SPEED LIMIT SIGNS.

④ THE BUFFER SPACE MAY BE INCREASED FOR DOWNGRADES AND OTHER CONDITIONS THAT AFFECT STOPPING DISTANCE.

⑤ LARGER SIGN SIZES MAY BE APPROVED BY THE PROJECT MANAGER.

⑥ PLACE END ROAD WORK SIGN AT END OF PROJECT LIMITS.

⑦ IN LIEU OF TWO SIGNS, THE FINES DOUBLE AND BEGIN WORK ZONE SIGNS CAN BE COMBINED ON ONE SIGN FACE.

⑧ POST EXISTING SPEED LIMIT IF CHANGED BY WORK ZONE.

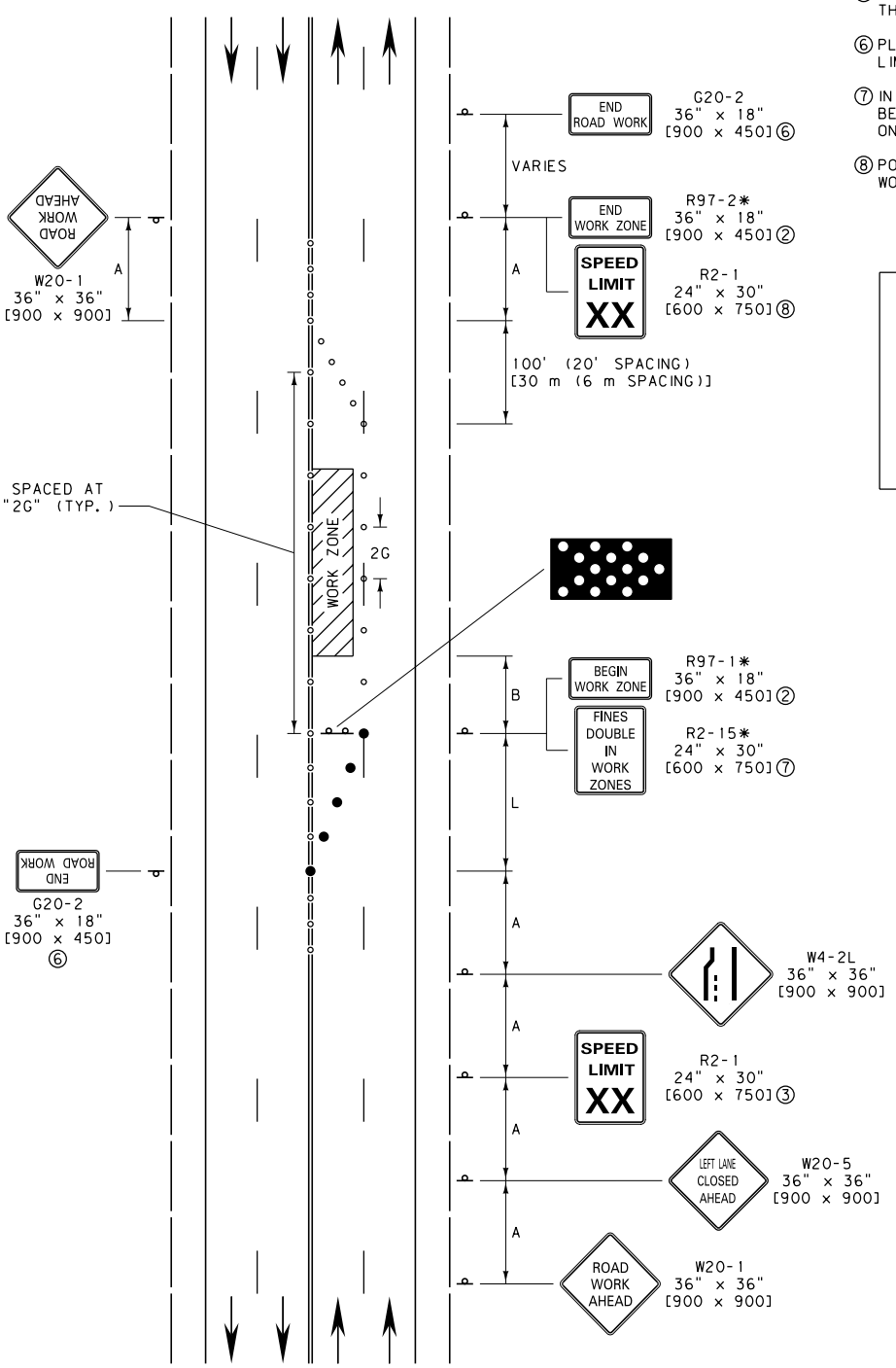

LEGEND

○ - FLEXIBLE GUIDE POSTS

● - PLASTIC DRUMS

✱ - DENOTES SIGNS THAT ARE UNIQUE TO MONTANA.

XX - SPEED DETERMINED BY THE PROJECT MANAGER. (25 M.P.H. OR 35 M.P.H.)

UNITS SHOWN IN BRACKETS [] ARE METRIC AND ARE IN MILLIMETERS (mm) UNLESS OTHER UNITS ARE SHOWN.

DETAILED DRAWING

REFERENCE STANDARD SPEC. SECTION 618

DWG. NO. 618-U25

LEFT LANE CLOSURE (LOW SPEED URBAN MULTI-LANE, UNDIVIDED ROAD)

EFFECTIVE: SEPTEMBER 2014

MDT MONTANA DEPARTMENT OF TRANSPORTATION

POSTED SPEED LIMIT FOR WORK ZONE	SIGN SPACING (A)	TAPER LENGTH (L)	SPACING OF CHANNELIZING DEVICES (MAX.) (G) ✱✱	BUFFER SPACE ④ (B)
(M.P.H.)	FEET [m]	FEET [m]	FEET [m]	FEET [m]
25	100 [30]	125 [40]	25 [8]	50 [15]
35	100 [30]	245 [84]	35 [12]	100 [30]

✱✱ SPACE ALL CHANNELIZING DEVICES AT "G" UNLESS OTHERWISE NOTED.

NOTES:

① USE THIS SIGN LAYOUT IN URBAN APPLICATIONS ONLY. USE THE RURAL, OPEN ROADWAY SIGNING DETAILS WHEN HIGHER SPEED LIMITS ARE USED.

② THE WORK ZONE REFERS TO THE AREA WHERE WORK IS ACTUALLY TAKING PLACE. KEEP THE BEGIN AND END WORK ZONE SIGNS WITHIN 500' [150 m] OF THE WORK ZONE BOUNDARY. INCLUDE THE BEGIN AND END WORK ZONE SIGNS WHEN WORK IS IN PROGRESS.

③ INCLUDE SPEED LIMIT SIGNS ONLY IF THERE IS A REASON TO RESTRICT SPEED. COVER OR REMOVE CONFLICTING EXISTING SPEED LIMIT SIGNS.

④ THE BUFFER SPACE MAY BE INCREASED FOR DOWNGRADES AND OTHER CONDITIONS THAT AFFECT STOPPING DISTANCE.

⑤ LARGER SIGN SIZES MAY BE APPROVED BY THE PROJECT MANAGER.

⑥ PLACE END ROAD WORK SIGNS AT END OF PROJECT LIMITS.

⑦ IN LIEU OF TWO SIGNS, THE FINES DOUBLE AND BEGIN WORK ZONE SIGNS CAN BE COMBINED ON ONE SIGN FACE.

⑧ POST EXISTING SPEED LIMIT IF CHANGED BY WORK ZONE.

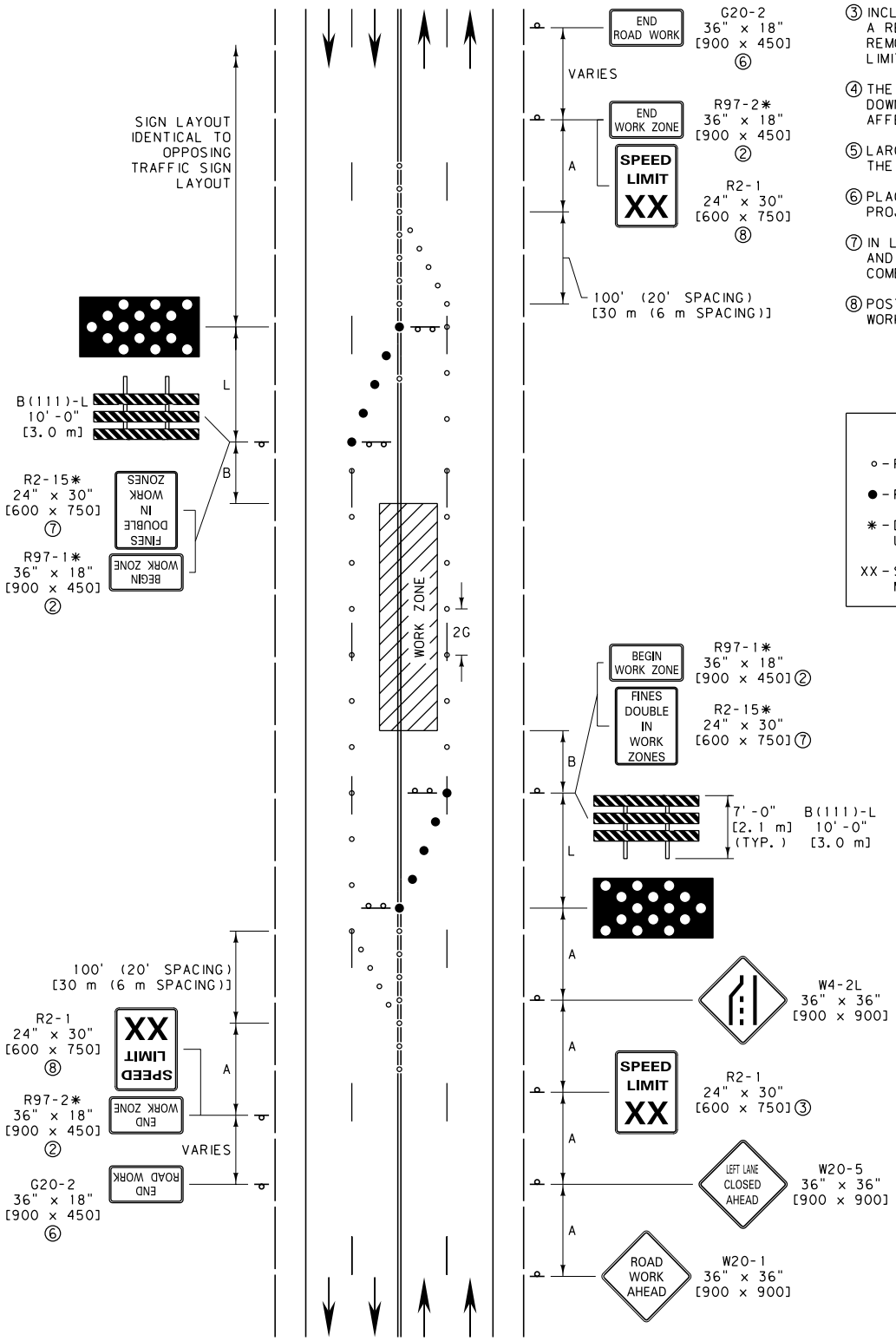

LEGEND

○ - FLEXIBLE GUIDE POSTS

● - PLASTIC DRUMS

✱ - DENOTES SIGNS THAT ARE UNIQUE TO MONTANA.

XX - SPEED DETERMINED BY THE PROJECT MANAGER. (25 M.P.H. OR 35 M.P.H.)

UNITS SHOWN IN BRACKETS [] ARE METRIC AND ARE IN MILLIMETERS (mm) UNLESS OTHER UNITS ARE SHOWN.

DETAILED DRAWING

REFERENCE STANDARD SPEC. SECTION 618

DWG. NO. 618-U30

LEFT LANE CLOSURES (LOW SPEED URBAN MULTI-LANE, UNDIVIDED ROAD)

EFFECTIVE: SEPTEMBER 2014

MDT MONTANA DEPARTMENT OF TRANSPORTATION

POSTED SPEED LIMIT FOR WORK ZONE	SIGN SPACING (A)	TAPER LENGTH (L)	SPACING OF CHANNELIZING DEVICES (MAX.) (G) ✱✱	BUFFER SPACE ④ (B)
(M.P.H.)	FEET [m]	FEET [m]	FEET [m]	FEET [m]
25	100 [30]	125 [40]	25 [8]	50 [15]
35	100 [30]	245 [84]	35 [12]	100 [30]

✱✱ SPACE ALL CHANNELIZING DEVICES AT "G" UNLESS OTHERWISE NOTED.

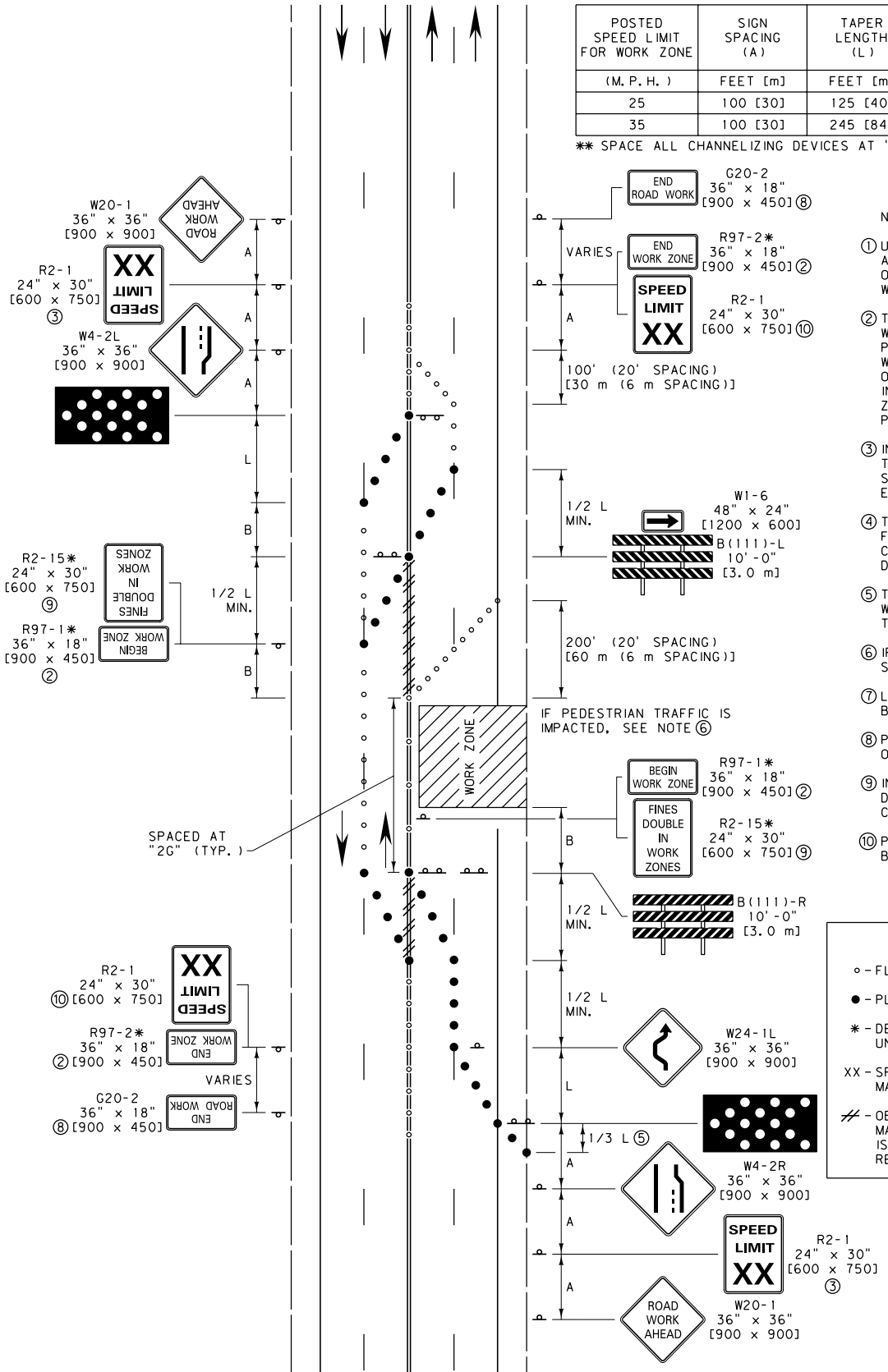

NOTES:

① USE THIS SIGN LAYOUT IN URBAN APPLICATIONS ONLY. USE THE RURAL, OPEN ROADWAY SIGNING DETAILS WHEN HIGHER SPEED LIMITS ARE USED.

② THE WORK ZONE REFERS TO THE AREA WHERE WORK IS ACTUALLY TAKING PLACE. KEEP THE BEGIN AND END WORK ZONE SIGNS WITHIN 500' [150 m] OF THE WORK ZONE BOUNDARY. INCLUDE THE BEGIN AND END WORK ZONE SIGNS WHEN WORK IS IN PROGRESS.

③ INCLUDE SPEED LIMIT SIGNS ONLY IF THERE IS A REASON TO RESTRICT SPEED. COVER OR REMOVE CONFLICTING EXISTING SPEED LIMIT SIGNS.

④ THE BUFFER SPACE MAY BE INCREASED FOR DOWNGRADES AND OTHER CONDITIONS THAT AFFECT STOPPING DISTANCE.

⑤ THE SHOULDER TAPER MAY BE OMITTED WHEN THE PAVED SHOULDER IS LESS THAN 8' [2.4 m] IN WIDTH.

⑥ IF PEDESTRIAN TRAFFIC IS IMPACTED SEE DTL. DWG. NO. 618-U05.

⑦ LARGER SIGN SIZES MAY BE APPROVED BY THE PROJECT MANAGER.

⑧ PLACE END ROAD WORK SIGNS AT END OF PROJECT LIMITS.

⑨ IN LIEU OF TWO SIGNS, THE FINES DOUBLE AND BEGIN WORK ZONE SIGNS CAN BE COMBINED ON ONE SIGN FACE.

⑩ POST EXISTING SPEED LIMIT IF CHANGED BY WORK ZONE.

LEGEND

○ - FLEXIBLE GUIDE POSTS

● - PLASTIC DRUMS

✱ - DENOTES SIGNS THAT ARE UNIQUE TO MONTANA.

XX - SPEED DETERMINED BY THE PROJECT MANAGER. (25 M.P.H. OR 35 M.P.H.)

// - OBLITERATE CONFLICTING PAVEMENT MARKINGS WHEN WORK OPERATION IS LONGER THAN 3 DAYS. (DO NOT REMOVE THERMOPLASTIC)

UNITS SHOWN IN BRACKETS [] ARE METRIC AND ARE IN MILLIMETERS (mm) UNLESS OTHER UNITS ARE SHOWN.

DETAILED DRAWING

REFERENCE STANDARD SPEC. SECTION 618

DWG. NO. 618-U35

DOUBLE LANE CLOSURE (URBAN MULTI-LANE, UNDIVIDED ROAD)

EFFECTIVE: SEPTEMBER 2014

MDT MONTANA DEPARTMENT OF TRANSPORTATION

POSTED SPEED LIMIT FOR WORK ZONE	SIGN SPACING (A)	TAPER LENGTH (L)	SPACING OF CHANNELIZING DEVICES (MAX.) (G) **	BUFFER SPACE ④ (B)
(M.P.H.)	FEET [m]	FEET [m]	FEET [m]	FEET [m]
25	100 [30]	125 [40]	25 [8]	50 [15]
35	100 [30]	245 [84]	35 [12]	100 [30]

** SPACE ALL CHANNELIZING DEVICES AT "G" UNLESS OTHERWISE NOTED.

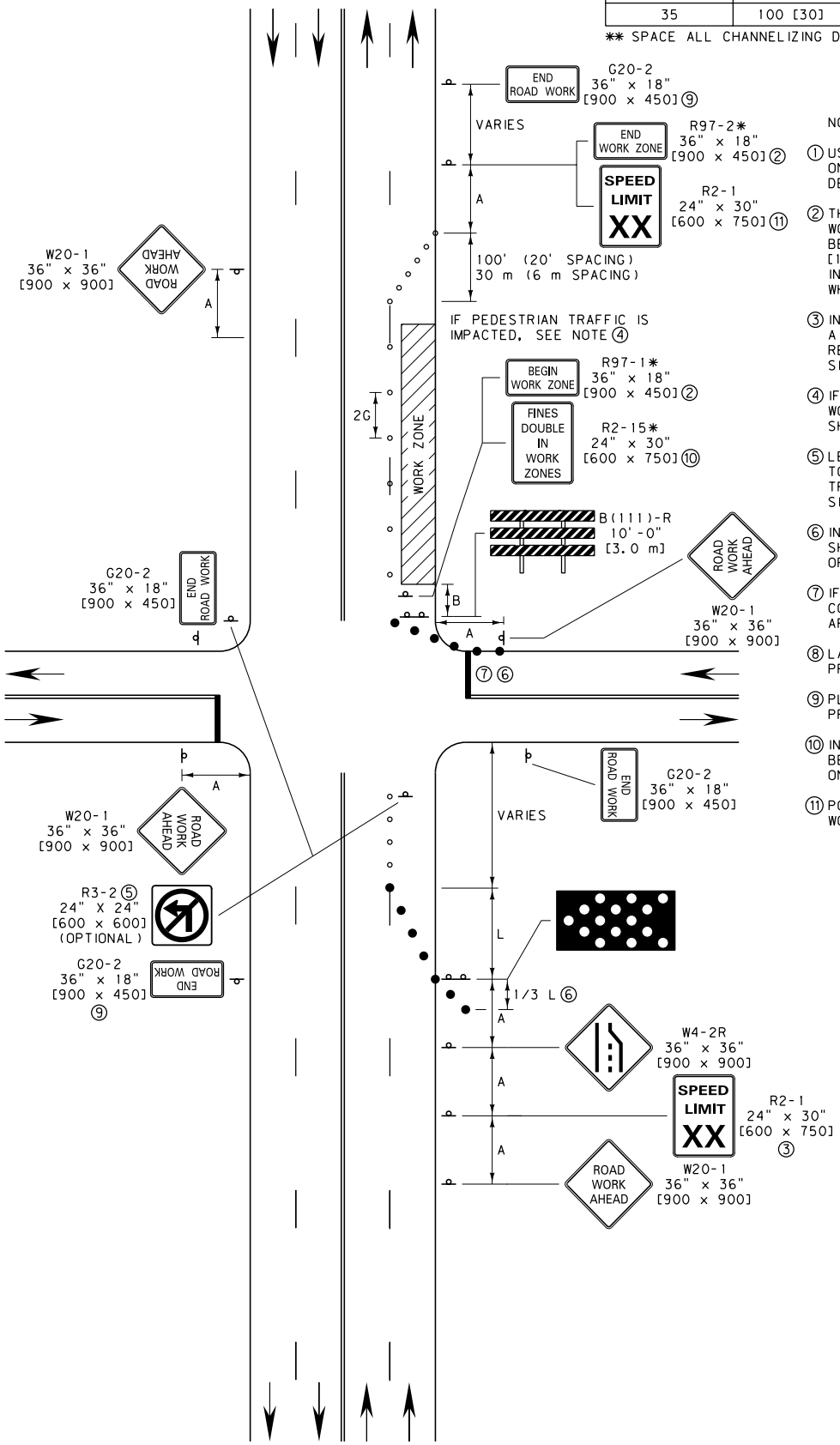

NOTES:

① USE THIS SIGN LAYOUT IN URBAN APPLICATIONS ONLY. USE THE RURAL, OPEN ROADWAY SIGNING DETAILS WHEN HIGHER SPEED LIMITS ARE USED.

② THE WORK ZONE REFERS TO THE AREA WHERE WORK IS ACTUALLY TAKING PLACE. KEEP THE BEGIN AND END WORK ZONE SIGNS WITHIN 500' [150 m] OF THE WORK ZONE BOUNDARY. INCLUDE THE BEGIN AND END WORK ZONE SIGNS WHEN WORK IS IN PROGRESS.

③ INCLUDE SPEED LIMIT SIGNS ONLY IF THERE IS A REASON TO RESTRICT SPEED. COVER OR REMOVE CONFLICTING EXISTING SPEED LIMIT SIGNS.

④ IF PEDESTRIAN TRAFFIC IS IMPACTED BY THE WORK ZONE, USE THE INFORMATION AND DEVICES SHOWN IN DTL. DWG. NO. 618-U05 AND 618-U10.

⑤ LEFT TURNING MOVEMENTS MAY BE PROHIBITED TO MAINTAIN CAPACITY FOR THROUGH VEHICULAR TRAFFIC (UNLESS CONTROLLED BY TRAFFIC SIGNAL).

⑥ INCLUDE A SHOULDER TAPER WHEN PAVED SHOULDER IS 8' [2.4 m] OR GREATER IN WIDTH OR WHEN A PARKING LANE IS PRESENT.

⑦ IF LIMITED SIGHT DISTANCE FROM THIS APPROACH, CONSIDER RIGHT TURN ONLY OR CLOSING THE APPROACH.

⑧ LARGER SIGN SIZES MAY BE APPROVED BY THE PROJECT MANAGER.

⑨ PLACE END ROAD WORK SIGNS AT END OF PROJECT LIMITS.

⑩ IN LIEU OF TWO SIGNS, THE FINES DOUBLE AND BEGIN WORK ZONE SIGNS CAN BE COMBINED ON ONE SIGN FACE.

⑪ POST EXISTING SPEED LIMIT IF CHANGED BY WORK ZONE.

LEGEND

○ - FLEXIBLE GUIDE POSTS

● - PLASTIC DRUMS

* - DENOTES SIGNS THAT ARE UNIQUE TO MONTANA.

XX - SPEED DETERMINED BY THE PROJECT MANAGER. (25 M.P.H. OR 35 M.P.H.)

UNITS SHOWN IN BRACKETS [] ARE METRIC AND ARE IN MILLIMETERS (mm) UNLESS OTHER UNITS ARE SHOWN.

DETAILED DRAWING

REFERENCE STANDARD SPEC. SECTION 618

DWG. NO. 618-U40

RIGHT LANE CLOSURE-WORK ZONE BEYOND INTERSECTION (URBAN MULTI-LANE, UNDIVIDED ROAD)

EFFECTIVE: SEPTEMBER 2014

MDT MONTANA DEPARTMENT OF TRANSPORTATION

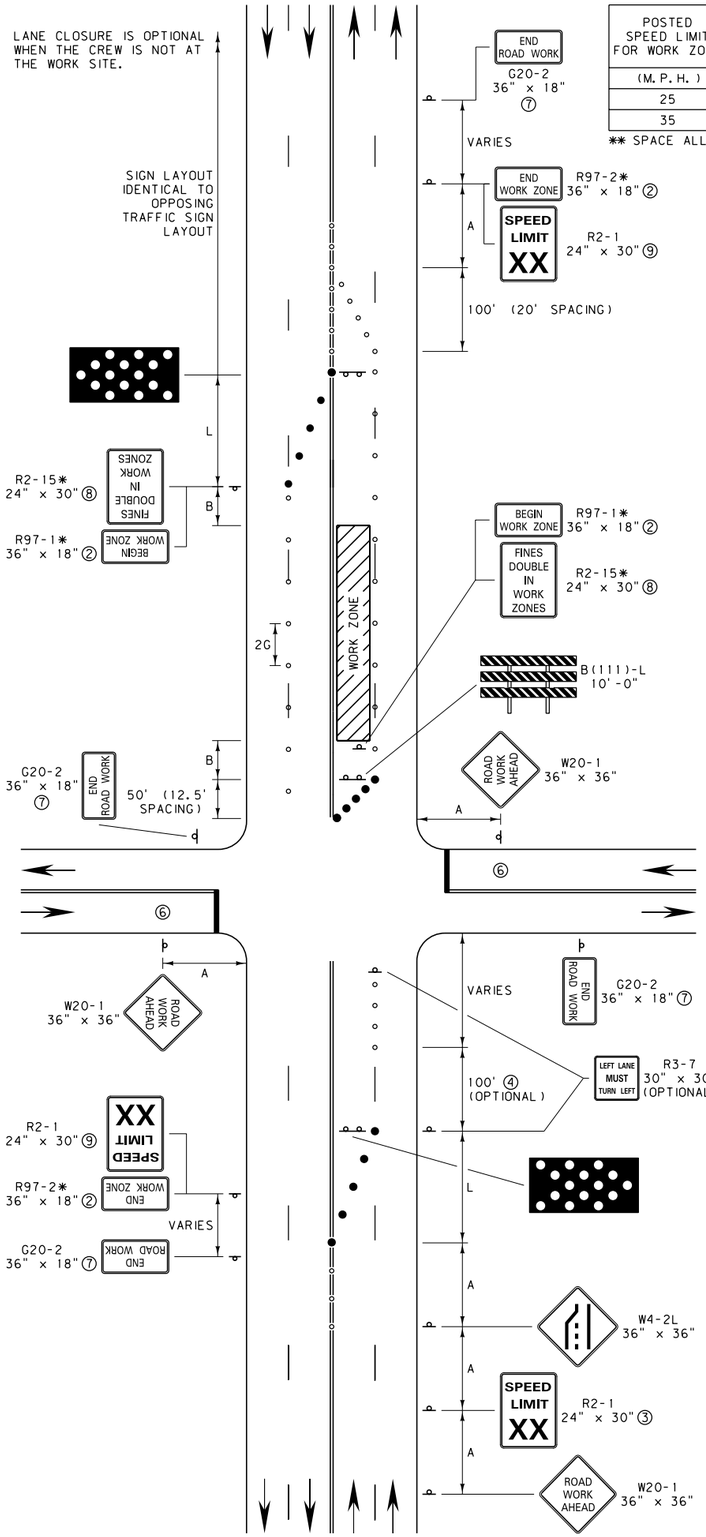

POSTED SPEED LIMIT FOR WORK ZONE	SIGN SPACING (A)	TAPER LENGTH (L)	SPACING OF CHANNELIZING DEVICES (MAX.) (G) **	BUFFER SPACE ④ (B)
(M.P.H.)	FEET	FEET	FEET	FEET
25	100	125	25	50
35	100	245	35	100

** SPACE ALL CHANNELIZING DEVICES AT "G" UNLESS OTHERWISE NOTED.

NOTES:

① USE THIS SIGN LAYOUT IN URBAN APPLICATIONS ONLY. USE THE RURAL, OPEN ROADWAY SIGNING DETAILS WHEN HIGHER SPEED LIMITS ARE USED.

② THE WORK ZONE REFERS TO THE AREA WHERE WORK IS ACTUALLY TAKING PLACE. KEEP THE BEGIN AND END WORK ZONE SIGNS WITHIN 500' OF THE WORK ZONE BOUNDARY. INCLUDE THE BEGIN AND END WORK ZONE SIGNS WHEN WORK IS IN PROGRESS.

③ INCLUDE SPEED LIMIT SIGNS ONLY IF THERE IS A REASON TO RESTRICT SPEED. COVER OR REMOVE CONFLICTING EXISTING SPEED LIMIT SIGNS.

④ NORMAL PROCEDURE IS TO COMPLETELY CLOSE THE LEFT LANE, BUT IF THE LEFT LANE HAS SIGNIFICANT LEFT-TURNING TRAFFIC, THE OPTION SHOWN MAY BE USED. ADJUST FLEXIBLE GUIDE POSTS TO ALLOW THE TURNING MOVEMENTS.

⑤ LARGER SIGN SIZES MAY BE APPROVED BY THE PROJECT MANAGER.

⑥ IF LIMITED SIGHT DISTANCE FROM EITHER APPROACH, CONSIDER RIGHT TURNS ONLY OR CLOSING EACH APPROACH WHEN CONDITIONS WARRANT.

⑦ PLACE END ROAD WORK SIGNS AT END OF PROJECT LIMITS.

⑧ IN LIEU OF TWO SIGNS, THE FINES DOUBLE AND BEGIN WORK ZONE SIGNS CAN BE COMBINED ON ONE SIGN FACE.

⑨ POST EXISTING SPEED LIMIT IF CHANGED BY WORK ZONE.

LEGEND

○ - FLEXIBLE GUIDE POSTS

● - PLASTIC DRUMS

* - DENOTES SIGNS THAT ARE UNIQUE TO MONTANA.

XX - SPEED DETERMINED BY THE PROJECT MANAGER. (25 M.P.H. OR 35 M.P.H.)

R3-2
24" X 24"
(OPTIONAL)

FOR INTERSECTION APPROACHES REDUCED TO A SINGLE LANE, LEFT TURNS MAY BE PROHIBITED TO MAINTAIN CAPACITY FOR THROUGH TRAFFIC. WHEN PROHIBITING A TURN, TWO TURN PROHIBITION SIGNS SHOULD BE USED, ONE ON THE NEAR SIDE AND, SPACE PERMITTING, ONE ON THE FAR SIDE OF THE INTERSECTION.

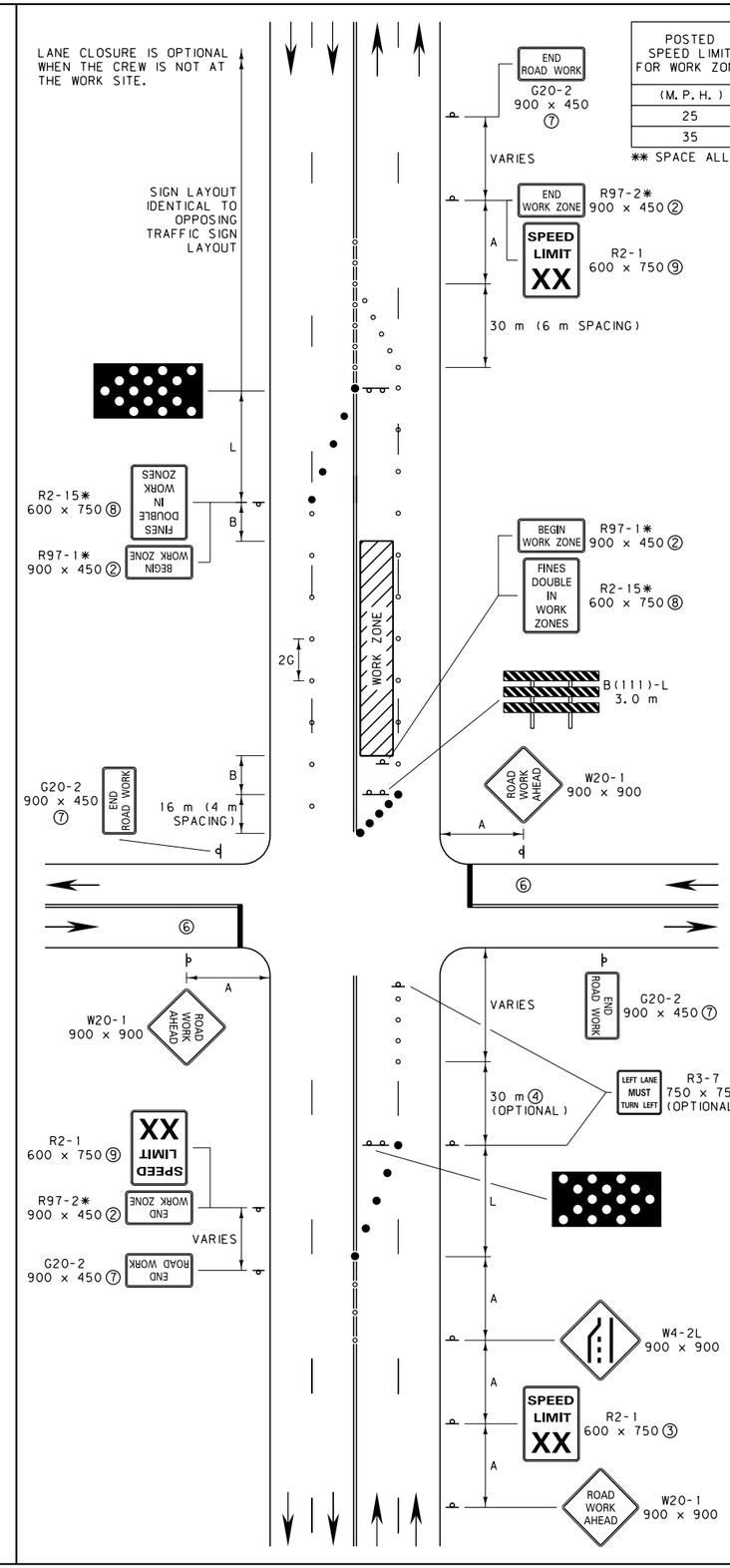

POSTED SPEED LIMIT FOR WORK ZONE	SIGN SPACING (A)	TAPER LENGTH (L)	SPACING OF CHANNELIZING DEVICES (MAX.) (G) **	BUFFER SPACE ④ (B)
(M.P.H.)	m	m	m	m
25	30	40	8	15
35	30	84	12	30

** SPACE ALL CHANNELIZING DEVICES AT "G" UNLESS OTHERWISE NOTED.

NOTES:

① USE THIS SIGN LAYOUT IN URBAN APPLICATIONS ONLY. USE THE RURAL, OPEN ROADWAY SIGNING DETAILS WHEN HIGHER SPEED LIMITS ARE USED.

② THE WORK ZONE REFERS TO THE AREA WHERE WORK IS ACTUALLY TAKING PLACE. KEEP THE BEGIN AND END WORK ZONE SIGNS WITHIN 150 m OF THE WORK ZONE BOUNDARY. INCLUDE THE BEGIN AND END WORK ZONE SIGNS WHEN WORK IS IN PROGRESS.

③ INCLUDE SPEED LIMIT SIGNS ONLY IF THERE IS A REASON TO RESTRICT SPEED. COVER OR REMOVE CONFLICTING EXISTING SPEED LIMIT SIGNS.

④ NORMAL PROCEDURE IS TO COMPLETELY CLOSE THE LEFT LANE, BUT IF THE LEFT LANE HAS SIGNIFICANT LEFT-TURNING TRAFFIC, THE OPTION SHOWN MAY BE USED. ADJUST FLEXIBLE GUIDE POSTS TO ALLOW THE TURNING MOVEMENTS.

⑤ LARGER SIGN SIZES MAY BE APPROVED BY THE PROJECT MANAGER.

⑥ IF LIMITED SIGHT DISTANCE FROM EITHER APPROACH, CONSIDER RIGHT TURNS ONLY OR CLOSING EACH APPROACH WHEN CONDITIONS WARRANT.

⑦ PLACE END ROAD WORK SIGNS AT END OF PROJECT LIMITS.

⑧ IN LIEU OF TWO SIGNS, THE FINES DOUBLE AND BEGIN WORK ZONE SIGNS CAN BE COMBINED ON ONE SIGN FACE.

⑨ POST EXISTING SPEED LIMIT IF CHANGED BY WORK ZONE.

LEGEND

○ - FLEXIBLE GUIDE POSTS

● - PLASTIC DRUMS

* - DENOTES SIGNS THAT ARE UNIQUE TO MONTANA.

XX - SPEED DETERMINED BY THE PROJECT MANAGER. (25 M.P.H. OR 35 M.P.H.)

R3-2
600 x 600
(OPTIONAL)

FOR INTERSECTION APPROACHES REDUCED TO A SINGLE LANE, LEFT TURNS MAY BE PROHIBITED TO MAINTAIN CAPACITY FOR THROUGH TRAFFIC. WHEN PROHIBITING A TURN, TWO TURN PROHIBITION SIGNS SHOULD BE USED, ONE ON THE NEAR SIDE AND, SPACE PERMITTING, ONE ON THE FAR SIDE OF THE INTERSECTION.

ALL DIMENSIONS ARE MILLIMETERS (mm) UNLESS OTHERWISE NOTED.

DETAILED DRAWING

REFERENCE STANDARD SPEC. SECTION 618

DWG. NO. 618-U45

LEFT LANE CLOSURE-WORK ZONE BEYOND INTERSECTION (URBAN MULTI-LANE, UNDIVIDED ROAD)

EFFECTIVE: SEPTEMBER 2014

MDT MONTANA DEPARTMENT OF TRANSPORTATION

POSTED SPEED LIMIT FOR WORK ZONE	SIGN SPACING (A)	TAPER LENGTH (L)	SPACING OF CHANNELIZING DEVICES (MAX.) (G) ✱✱	BUFFER SPACE ④ (B)
(M.P.H.)	FEET	FEET	FEET	FEET
25	100	125	25	50
35	100	245	35	100

✱✱ SPACE ALL CHANNELIZING DEVICES AT "G" UNLESS OTHERWISE NOTED.

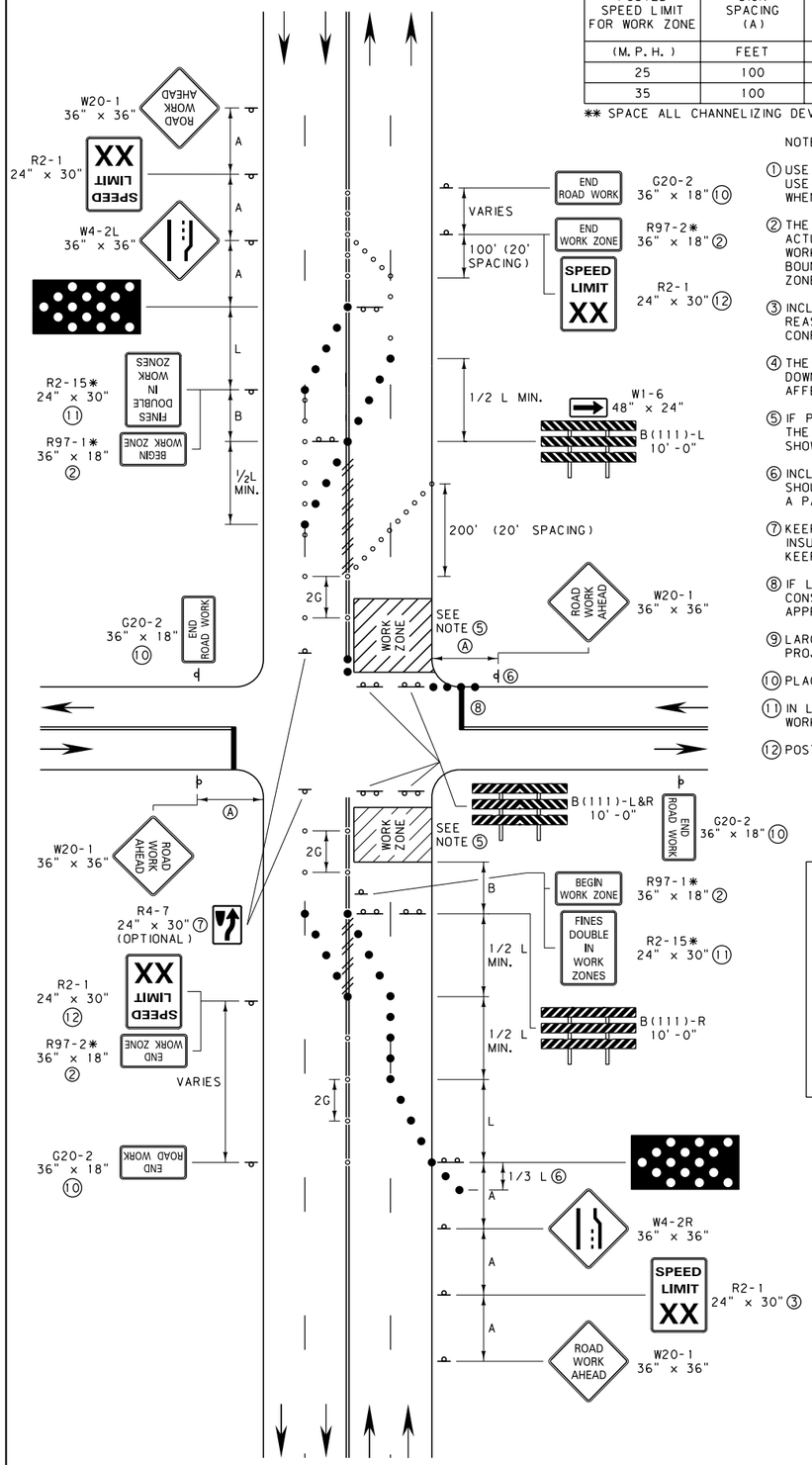

NOTES:

① USE THIS SIGN LAYOUT IN URBAN APPLICATIONS ONLY. USE THE RURAL, OPEN ROADWAY SIGNING DETAILS WHEN HIGHER SPEED LIMITS ARE USED.

② THE WORK ZONE REFERS TO THE AREA WHERE WORK IS ACTUALLY TAKING PLACE. KEEP THE BEGIN AND END WORK ZONE SIGNS WITHIN 500' OF THE WORK ZONE BOUNDARY. INCLUDE THE BEGIN AND END WORK ZONE SIGNS WHEN WORK IS IN PROGRESS.

③ INCLUDE SPEED LIMIT SIGNS ONLY IF THERE IS A REASON TO RESTRICT SPEED. COVER OR REMOVE CONFLICTING EXISTING SPEED LIMIT SIGNS.

④ THE BUFFER SPACE MAY BE INCREASED FOR DOWNGRADES AND OTHER CONDITIONS THAT AFFECT STOPPING DISTANCE.

⑤ IF PEDESTRIAN TRAFFIC IS IMPACTED BY THE WORK ZONE, USE THE INFORMATION AND DEVICES SHOWN IN DTL. DWG. NO. 618-U5 AND 618-U10.

⑥ INCLUDE A SHOULDER TAPER WHEN PAVED SHOULDER IS 8' OR GREATER IN WIDTH OR WHEN A PARKING LANE IS PRESENT.

⑦ KEEP RIGHT SIGNS MAY BE OMITTED IF THERE IS INSUFFICIENT SPACE TO PLACE THE BACK-TO-BACK KEEP RIGHT SIGN AND NO LEFT TURN SYMBOL SIGNS.

⑧ IF LIMITED SIGHT DISTANCE FROM THIS APPROACH, CONSIDER RIGHT TURN ONLY OR CLOSING THE APPROACH.

⑨ LARGER SIGN SIZES MAY BE APPROVED BY THE PROJECT MANAGER.

⑩ PLACE END ROAD WORK SIGNS AT END OF PROJECT LIMITS.

⑪ IN LIEU OF TWO SIGNS, THE FINES DOUBLE AND BEGIN WORK ZONE SIGNS CAN BE COMBINED ON ONE SIGN FACE.

⑫ POST EXISTING SPEED LIMIT IF CHANGED BY WORK ZONE.

LEGEND

○ - FLEXIBLE GUIDE POSTS

● - PLASTIC DRUMS

✱ - DENOTES SIGNS THAT ARE UNIQUE TO MONTANA.

XX - SPEED DETERMINED BY THE PROJECT MANAGER. (25 M.P.H. OR 35 M.P.H.)

// - OBLITERATE CONFLICTING PAVEMENT MARKINGS WHEN WORK OPERATION IS LONGER THAN 3 DAYS. (DO NOT REMOVE THERMOPLASTIC).

R3-2
24" X 24" ⑦
(OPTIONAL)

FOR INTERSECTION APPROACHES REDUCED TO A SINGLE LANE, LEFT TURNS MAY BE PROHIBITED TO MAINTAIN CAPACITY FOR THROUGH TRAFFIC. WHEN PROHIBITING A TURN, TWO TURN PROHIBITION SIGNS SHOULD BE USED, ONE ON THE NEAR SIDE AND, SPACE PERMITTING, ONE ON THE FAR SIDE OF THE INTERSECTION.

POSTED SPEED LIMIT FOR WORK ZONE	SIGN SPACING (A)	TAPER LENGTH (L)	SPACING OF CHANNELIZING DEVICES (MAX.) (G) ✱✱	BUFFER SPACE ④ (B)
(M.P.H.)	m	m	m	m
25	30	40	8	15
35	30	84	12	30

✱✱ SPACE ALL CHANNELIZING DEVICES AT "G" UNLESS OTHERWISE NOTED.

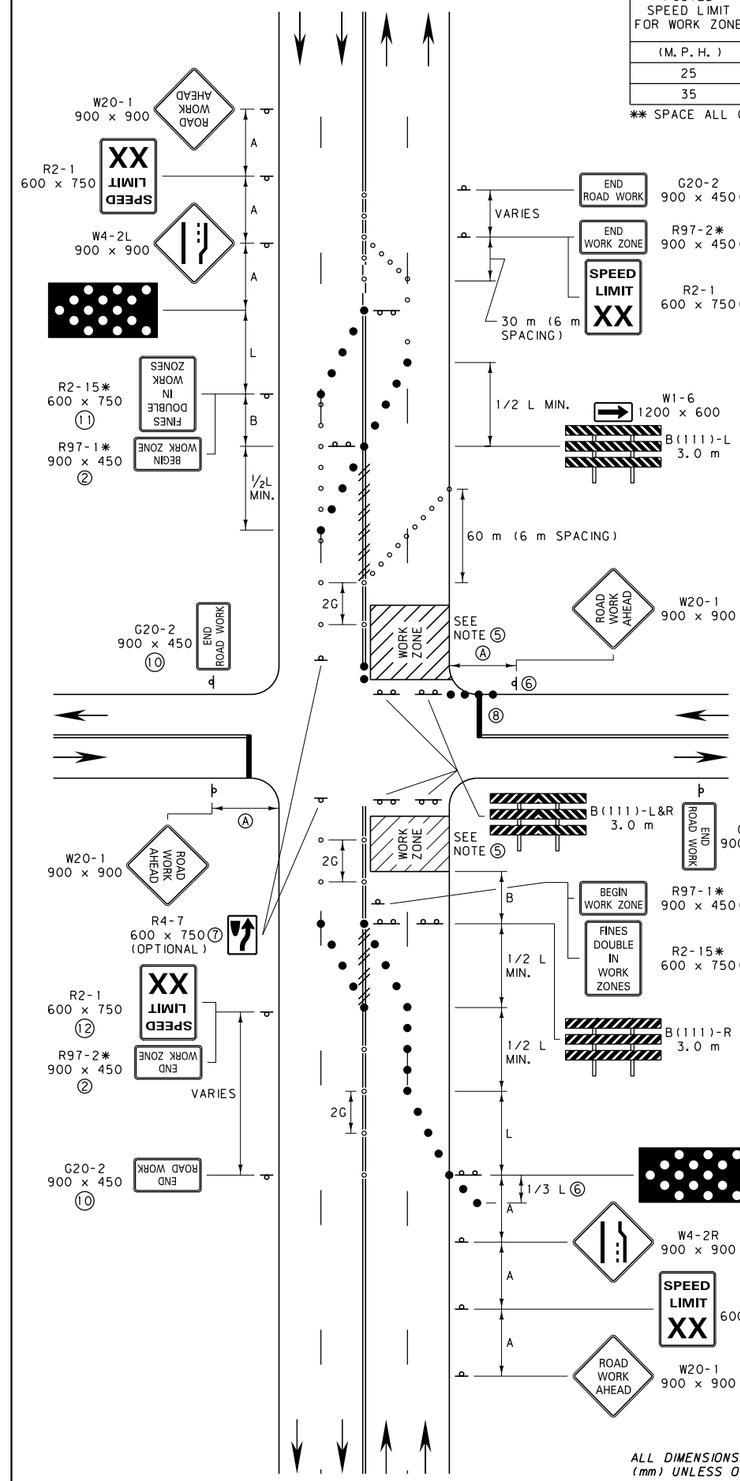

NOTES:

① USE THIS SIGN LAYOUT IN URBAN APPLICATIONS ONLY. USE THE RURAL, OPEN ROADWAY SIGNING DETAILS WHEN HIGHER SPEED LIMITS ARE USED.

② THE WORK ZONE REFERS TO THE AREA WHERE WORK IS ACTUALLY TAKING PLACE. KEEP THE BEGIN AND END WORK ZONE SIGNS WITHIN 150 m OF THE WORK ZONE BOUNDARY. INCLUDE THE BEGIN AND END WORK ZONE SIGNS WHEN WORK IS IN PROGRESS.

③ INCLUDE SPEED LIMIT SIGNS ONLY IF THERE IS A REASON TO RESTRICT SPEED. COVER OR REMOVE CONFLICTING EXISTING SPEED LIMIT SIGNS.

④ THE BUFFER SPACE MAY BE INCREASED FOR DOWNGRADES AND OTHER CONDITIONS THAT AFFECT STOPPING DISTANCE.

⑤ IF PEDESTRIAN TRAFFIC IS IMPACTED BY THE WORK ZONE, USE THE INFORMATION AND DEVICES SHOWN IN DTL. DWG. NO. 618-U5 AND 618-U10.

⑥ INCLUDE A SHOULDER TAPER WHEN PAVED SHOULDER IS 2.4 m OR GREATER IN WIDTH OR WHEN A PARKING LANE IS PRESENT.

⑦ KEEP RIGHT SIGNS MAY BE OMITTED IF THERE IS INSUFFICIENT SPACE TO PLACE THE BACK-TO-BACK KEEP RIGHT SIGN AND NO LEFT TURN SYMBOL SIGNS.

⑧ IF LIMITED SIGHT DISTANCE FROM THIS APPROACH, CONSIDER RIGHT TURN ONLY OR CLOSING THE APPROACH.

⑨ LARGER SIGN SIZES MAY BE APPROVED BY THE PROJECT MANAGER.

⑩ PLACE END ROAD WORK SIGNS AT END OF PROJECT LIMITS.

⑪ IN LIEU OF TWO SIGNS, THE FINES DOUBLE AND BEGIN WORK ZONE SIGNS CAN BE COMBINED ON ONE SIGN FACE.

⑫ POST EXISTING SPEED LIMIT IF CHANGED BY WORK ZONE.

LEGEND

○ - FLEXIBLE GUIDE POSTS

● - PLASTIC DRUMS

✱ - DENOTES SIGNS THAT ARE UNIQUE TO MONTANA.

XX - SPEED DETERMINED BY THE PROJECT MANAGER. (25 M.P.H. OR 35 M.P.H.)

// - OBLITERATE CONFLICTING PAVEMENT MARKINGS WHEN WORK OPERATION IS LONGER THAN 3 DAYS. (DO NOT REMOVE THERMOPLASTIC).

R3-2
600 X 600 ⑦
(OPTIONAL)

FOR INTERSECTION APPROACHES REDUCED TO A SINGLE LANE, LEFT TURNS MAY BE PROHIBITED TO MAINTAIN CAPACITY FOR THROUGH TRAFFIC. WHEN PROHIBITING A TURN, TWO TURN PROHIBITION SIGNS SHOULD BE USED, ONE ON THE NEAR SIDE AND, SPACE PERMITTING, ONE ON THE FAR SIDE OF THE INTERSECTION.

ALL DIMENSIONS ARE MILLIMETERS (mm) UNLESS OTHERWISE NOTED.

DETAILED DRAWING

REFERENCE STANDARD SPEC. SECTION 618 — DWG. NO. 618-U50

DOUBLE LANE CLOSURE AT INTERSECTION (URBAN MULTI-LANE, UNDIVIDED ROAD)

EFFECTIVE: SEPTEMBER 2014

MDT MONTANA DEPARTMENT OF TRANSPORTATION

POSTED SPEED LIMIT FOR WORK ZONE	SIGN SPACING (A)	TAPER LENGTH (L)	SPACING OF CHANNELIZING DEVICES (MAX.) (G) ✱✱	BUFFER SPACE ④ (B)
(M.P.H.)	FEET [m]	FEET [m]	FEET [m]	FEET [m]
25	100 [30]	125 [40]	25 [8]	50 [15]
35	100 [30]	245 [84]	35 [12]	100 [30]

✱✱ SPACE ALL CHANNELIZING DEVICES AT "G" UNLESS OTHERWISE NOTED.

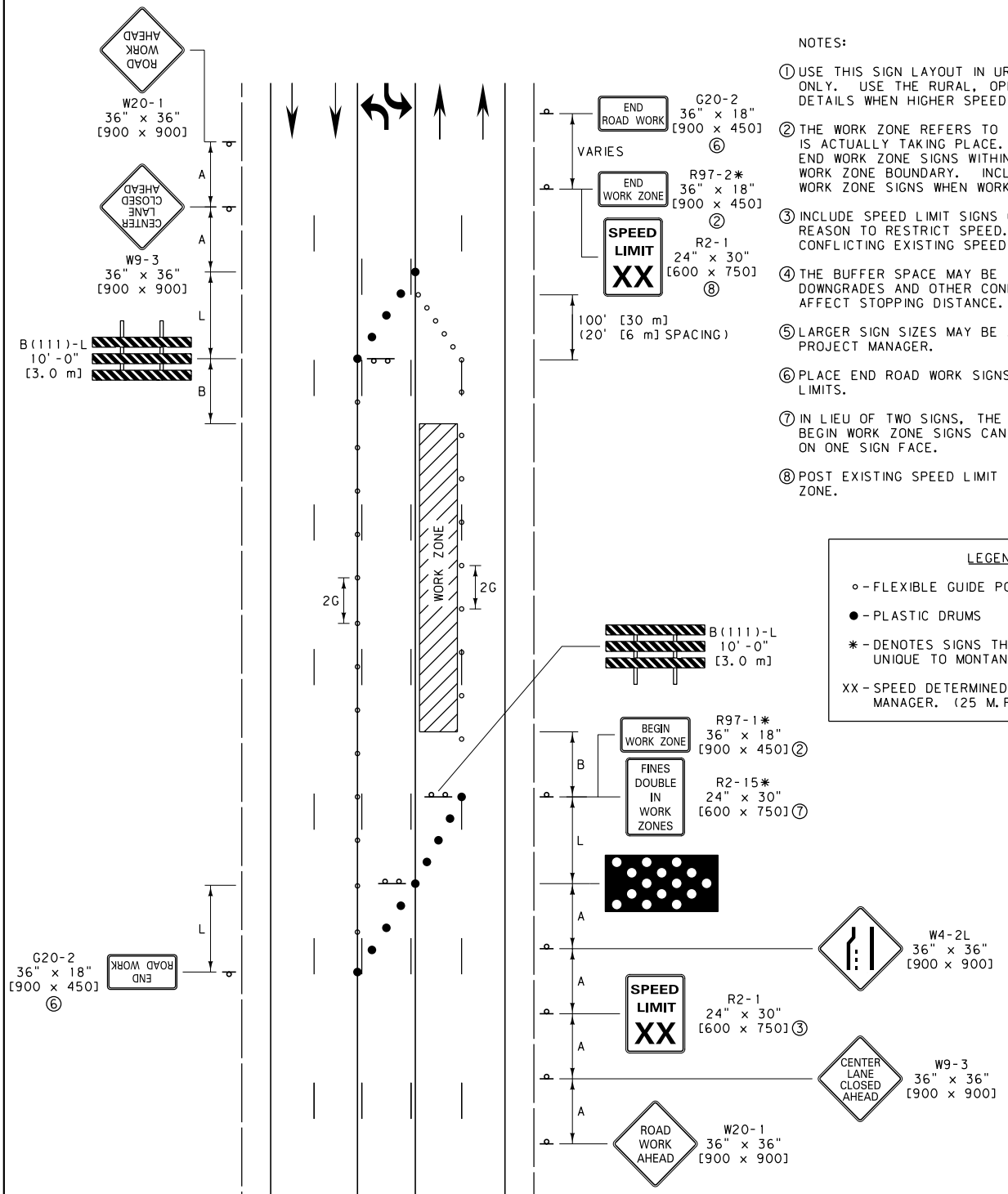

NOTES:

① USE THIS SIGN LAYOUT IN URBAN APPLICATIONS ONLY. USE THE RURAL, OPEN ROADWAY SIGNING DETAILS WHEN HIGHER SPEED LIMITS ARE USED.

② THE WORK ZONE REFERS TO THE AREA WHERE WORK IS ACTUALLY TAKING PLACE. KEEP THE BEGIN AND END WORK ZONE SIGNS WITHIN 500' [150 m] OF THE WORK ZONE BOUNDARY. INCLUDE THE BEGIN AND END WORK ZONE SIGNS WHEN WORK IS IN PROGRESS.

③ INCLUDE SPEED LIMIT SIGNS ONLY IF THERE IS A REASON TO RESTRICT SPEED. COVER OR REMOVE CONFLICTING EXISTING SPEED LIMIT SIGNS.

④ THE BUFFER SPACE MAY BE INCREASED FOR DOWNGRADES AND OTHER CONDITIONS THAT AFFECT STOPPING DISTANCE.

⑤ LARGER SIGN SIZES MAY BE APPROVED BY THE PROJECT MANAGER.

⑥ PLACE END ROAD WORK SIGNS AT END OF PROJECT LIMITS.

⑦ IN LIEU OF TWO SIGNS, THE FINES DOUBLE AND BEGIN WORK ZONE SIGNS CAN BE COMBINED ON ONE SIGN FACE.

⑧ POST EXISTING SPEED LIMIT IF CHANGED BY WORK ZONE.

LEGEND

○ - FLEXIBLE GUIDE POSTS

● - PLASTIC DRUMS

✱ - DENOTES SIGNS THAT ARE UNIQUE TO MONTANA.

XX - SPEED DETERMINED BY THE PROJECT MANAGER. (25 M.P.H. OR 35 M.P.H.)

UNITS SHOWN IN BRACKETS [] ARE METRIC AND ARE IN MILLIMETERS (mm) UNLESS OTHER UNITS ARE SHOWN.

DETAILED DRAWING

REFERENCE STANDARD SPEC. SECTION 618

DWG. NO. 618-U60

LEFT LANE CLOSURE (URBAN LOW SPEED, MULTI-LANE, UNDIVIDED ROAD WITH TWO-WAY LEFT TURN LANE)

EFFECTIVE: SEPTEMBER 2014

MDT MONTANA DEPARTMENT OF TRANSPORTATION

RURAL ①

RURAL WITH GUARDRAIL ②

URBAN ③

REGULATORY
R1-1 / R1-2

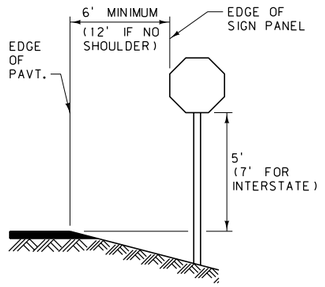

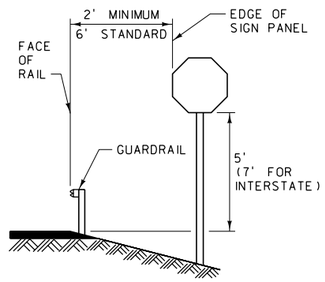

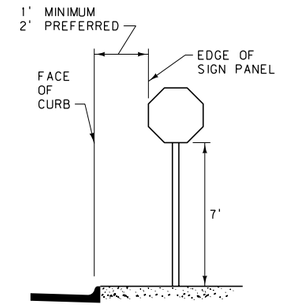

REGULATORY
EXCEPT R1-1 / R1-2

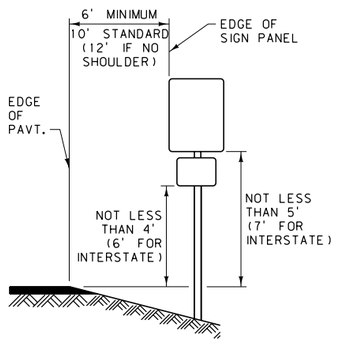

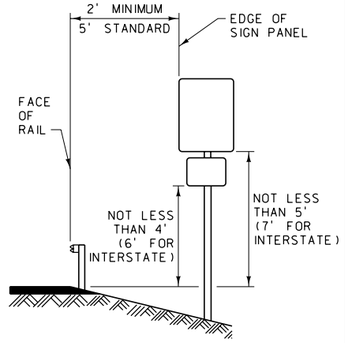

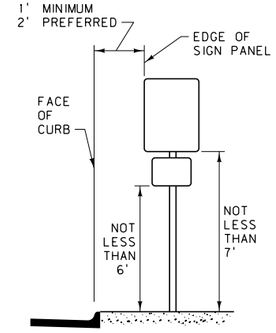

WARNING

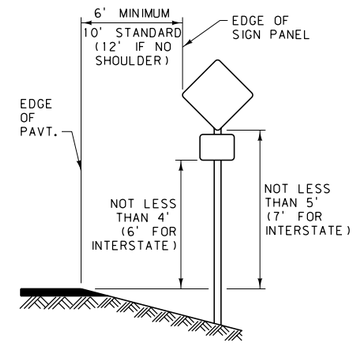

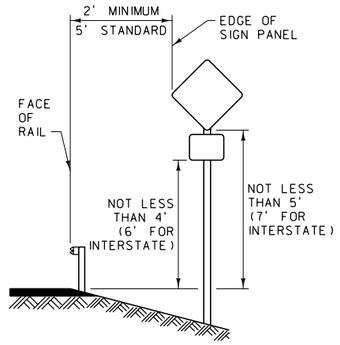

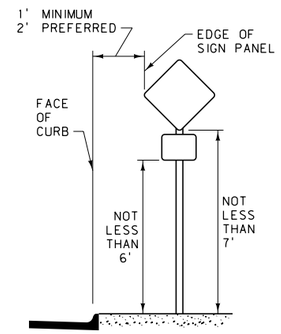

ROUTE MARKERS

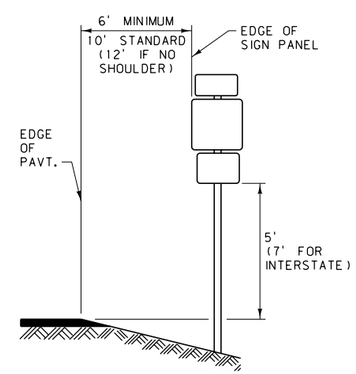

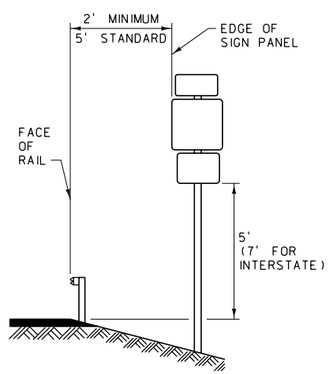

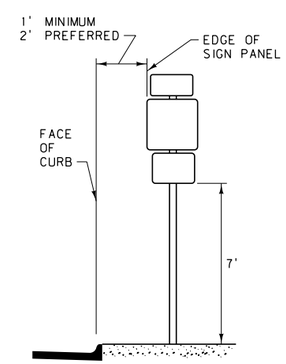

GUIDE SIGNS

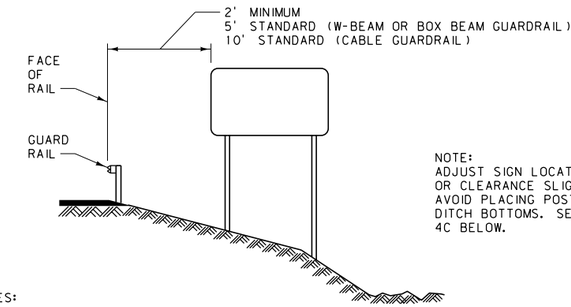

NOTE:
ADJUST SIGN LOCATION OR CLEARANCE SLIGHTLY TO AVOID PLACING POSTS IN DITCH BOTTOMS. SEE NOTE 4C BELOW.

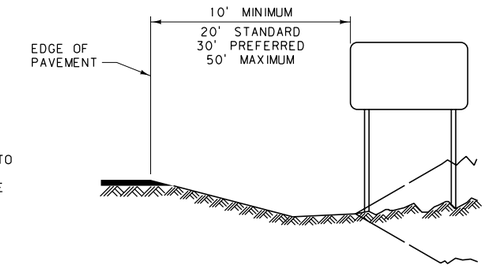

NOTES:

1. PLACE ALL SIGNS AT THE CLEARANCE AND MOUNTING HEIGHTS SHOWN.
2. FOR REGULATORY, WARNING AND ROUTE MARKER SIGNS, AND THEIR ASSEMBLIES, ON HIGHWAYS OTHER THAN INTERSTATE:
   A) USE DIAGRAMS LOCATED IN COLUMN ① WHEN PLACING THESE SIGNS IN STANDARD RURAL CONDITIONS. USE COLUMN ② WHEN PLACING THESE SIGNS BEHIND GUARDRAIL IN RURAL CONDITIONS. USE COLUMN ③ WHEN PLACING THESE SIGNS IN URBAN CONDITIONS WHERE THERE IS ADEQUATE CLEARANCE AND SIDEWALK WIDTH.
   B) WHERE SIDEWALK WIDTH IS LIMITED IN URBAN CONDITIONS, SEE DTL. DWG. NO. 619-18 FOR PLACEMENT DETAILS.
3. FOR REGULATORY (ALL OTHER), WARNING AND ROUTE MARKER SIGNS, AND THEIR ASSEMBLIES, ON INTERSTATE HIGHWAYS: THE CLEARANCE IS 20' FROM THE EDGE OF PAVEMENT IN COLUMN ① FOR STANDARD RURAL CONDITIONS. THE CLEARANCES LISTED IN COLUMNS ② AND ③ REMAIN AS SHOWN.
4. FOR GUIDE SIGNS AND THEIR ASSEMBLIES:
   A) USE THE DIAGRAMS LOCATED ABOVE WHEN PLACING THESE SIGNS IN THE GIVEN RURAL CONDITIONS.
   B) FOR PLACEMENT OF THESE SIGNS IN URBAN CONDITIONS, SEE THE SIGN LOCATION AND SPECIFICATION SHEETS IN THE SIGNING PLANS FOR EACH INDIVIDUAL SIGN.
   C) THE MAXIMUM CLEARANCE OF THESE SIGNS IS 50' IN ANY CONDITION.
   D) SEE DTL. DWG. NO. 619-08 FOR MOUNTING HEIGHTS.
5. WITHIN THE CITY LIMITS OR IN A SIDEWALK AND CURB AREA, MOUNT SIGNS TO HAVE THE PROPER CLEARANCES, BUT AVOID ANY CONFLICT BETWEEN THE POST AND THE MAIN WALKING AREA OF THE SIDEWALK, OR WITH DOORWAYS OR WINDOWS OF ADJACENT BUILDINGS. THE EXACT LOCATION OF THESE SIGN INSTALLATIONS WILL BE DETERMINED BY THE PROJECT MANAGER. SEE DTL. DWG. NO. 619-18 FOR VARIOUS CANTILEVER TYPE MOUNTINGS.
6. EVALUATE SIGNS WITHIN CLEAR ZONES (TABLES BELOW) FOR SUPPORT BREAKAWAY REQUIREMENTS (CONTACT MDT TRAFFIC SECTION FOR CRITERIA).
7. USE HARDWARE MEETING THE REQUIREMENTS OF SECTION 704.

CLEAR ZONE DISTANCES
(IN FEET FROM EDGE OF DRIVING LANE)

DESIGN SPEED	DESIGN ADT	FILL SLOPES			CUT SLOPES		
		6:1 OR FLATTER	5:1 TO 4:1	3:1	3:1	4:1 TO 5:1	6:1 OR FLATTER
40 MPH OR LESS	UNDER 750	7-10	7-10	**	7-10	7-10	7-10
	750-1499	10-12	12-14	**	10-12	10-12	10-12
	1500-6000	12-14	14-16	**	12-14	12-14	12-14
	OVER 6000	14-16	16-18	**	14-16	14-16	14-16
45-50 MPH	UNDER 750	10-12	12-14	**	8-10	8-10	10-12
	750-1499	12-14	16-20	**	10-12	12-14	14-16
	1500-6000	16-18	20-26	**	12-14	14-16	16-18
	OVER 6000	18-20	24-28	**	14-16	18-20	20-22
55 MPH	UNDER 750	12-14	14-18	**	8-10	10-12	10-12
	750-1499	16-18	20-24	**	10-12	14-16	16-18
	1500-6000	20-22	**24-30**	**	14-16	16-18	20-22
	OVER 6000	22-24	26-32 *	**	16-18	20-22	22-24
60 MPH	UNDER 750	16-18	20-24	**	10-12	12-14	14-16
	750-1499	20-24	26-32 *	**	12-14	16-18	20-22
	1500-6000	26-30	32-40 *	**	14-18	18-22	24-26
	OVER 6000	30-32 *	36-44 *	**	20-22	24-26	26-28
65-70 MPH	UNDER 750	18-20	20-26	**	10-12	14-16	14-16
	750-1499	24-26	28-36 *	**	12-16	18-20	20-22
	1500-6000	28-32 *	34-42 *	**	16-20	22-24	26-28
	OVER 6000	30-34 *	38-46 *	**	22-24	26-30	28-30

* WHEN AN INVESTIGATION OR ACCIDENT HISTORY INDICATES A HIGH PROBABILITY OF ACCIDENTS, CLEAR ZONE DISTANCES GREATER THAN 30' MAY BE PROVIDED AS INDICATED. CLEAR ZONES MAY ALSO BE LIMITED TO 30' TO PROVIDE A CONSISTENT ROADWAY TEMPLATE WHEN EXPERIENCE WITH PREVIOUS SIMILAR PROJECTS INDICATES SATISFACTORY PERFORMANCE.

** FIXED OBJECTS, INCLUDING SIGN POSTS, SHOULD NOT BE ALLOWED IN THE VICINITY OF THE TOE OF THESE SLOPES. SEE AASHTO ROADSIDE DESIGN GUIDE FOR ADDITIONAL CONSIDERATIONS IN LOCATING SIGNS.

HORIZONTAL CURVE ADJUSTMENTS
(APPLICABLE ON OUTSIDE OF CURVE ONLY)

RADIUS (FT)	DESIGN SPEED (MPH)						
	40	45	50	55	60	65	70
2860	1.1	1.1	1.1	1.2	1.2	1.2	1.3
2290	1.1	1.1	1.2	1.2	1.2	1.3	1.3
1910	1.1	1.2	1.2	1.2	1.3	1.3	1.4
1640	1.1	1.2	1.2	1.3	1.3	1.4	1.5
1430	1.2	1.2	1.3	1.3	1.4	1.4	
1270	1.2	1.2	1.3	1.3	1.4	1.5	
1150	1.2	1.2	1.3	1.4	1.5		
950	1.2	1.3	1.4	1.5	1.5		
820	1.3	1.3	1.4	1.5			
720	1.3	1.4	1.5				
640	1.3	1.4	1.5				
570	1.4	1.5					
380	1.5						

TO AVOID GLARE, SKEW SIGN AWAY FROM ROADWAY AT THE ANGLE SHOWN WHEN SIGN IS < 30' FROM SHOULDER. SKEW SIGN TOWARDS ROADWAY AT THE SAME ANGLE IF SIGN IS > 30' FROM SHOULDER.

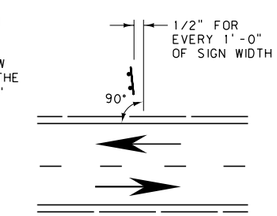

SKEW DIAGRAM

DETAILED DRAWING	
REFERENCE STANDARD SPEC. SECTION 619, 704	DWG. NO. 619-00
SIGN CLEARANCES AND MOUNTING HEIGHTS	
EFFECTIVE: SEPTEMBER 2014	

MDT MONTANA DEPARTMENT OF TRANSPORTATION

RURAL ①

RURAL WITH GUARDRAIL ②

URBAN ③

REGULATORY
R1-1 / R1-2

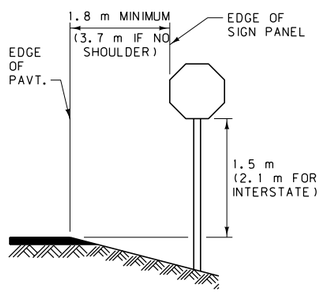

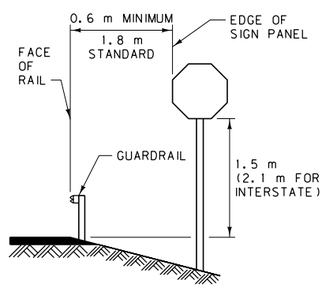

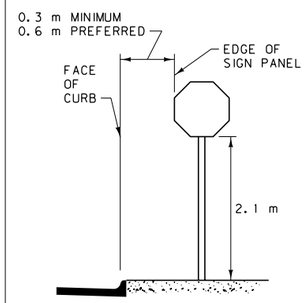

REGULATORY
EXCEPT R1-1 / R1-2

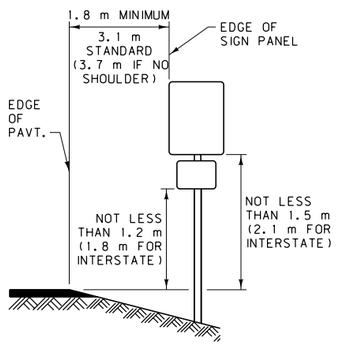

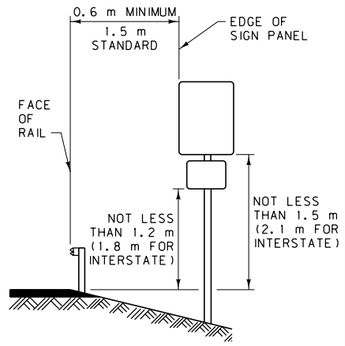

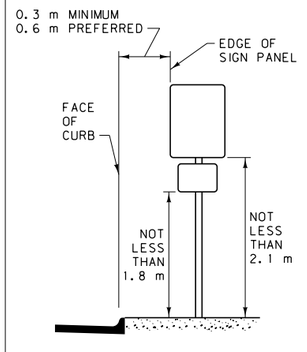

WARNING

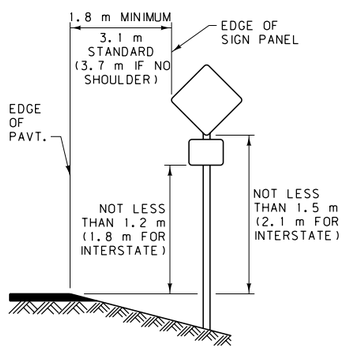

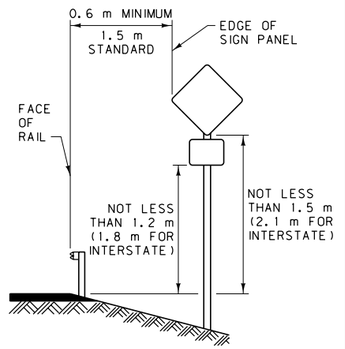

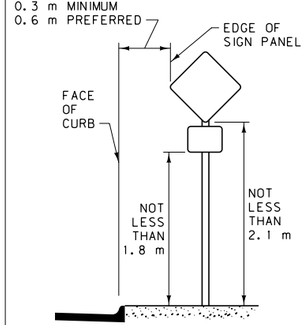

ROUTE MARKERS

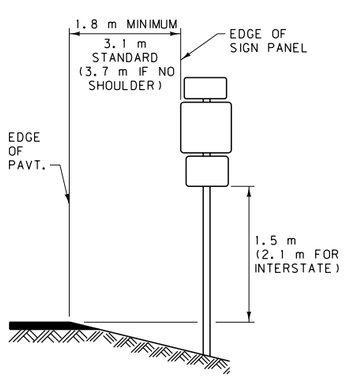

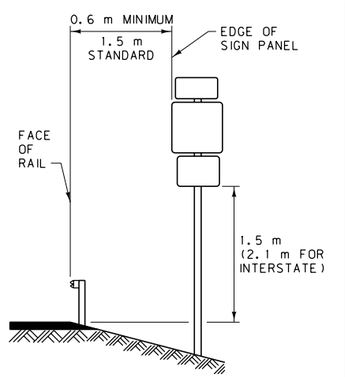

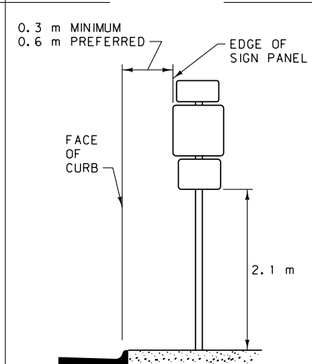

GUIDE SIGNS

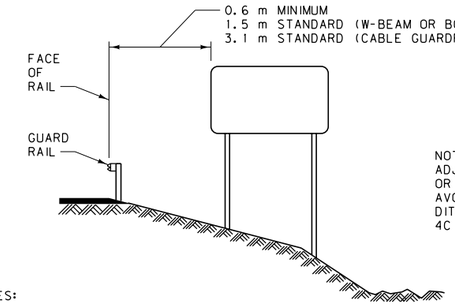

NOTE:
ADJUST SIGN LOCATION OR CLEARANCE SLIGHTLY TO AVOID PLACING POSTS IN DITCH BOTTOMS. SEE NOTE 4C BELOW.

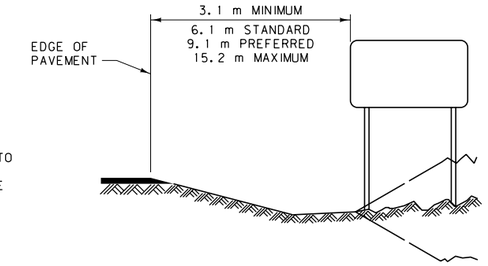

NOTES:

1. PLACE ALL SIGNS AT THE CLEARANCE AND MOUNTING HEIGHTS SHOWN.
2. FOR REGULATORY, WARNING AND ROUTE MARKER SIGNS, AND THEIR ASSEMBLIES, ON HIGHWAYS OTHER THAN INTERSTATE:
   A) USE DIAGRAMS LOCATED IN COLUMN ① WHEN PLACING THESE SIGNS IN STANDARD RURAL CONDITIONS. USE COLUMN ② WHEN PLACING THESE SIGNS BEHIND GUARDRAIL IN RURAL CONDITIONS. USE COLUMN ③ WHEN PLACING THESE SIGNS IN URBAN CONDITIONS WHERE THERE IS ADEQUATE CLEARANCE AND SIDEWALK WIDTH.
   B) WHERE SIDEWALK WIDTH IS LIMITED IN URBAN CONDITIONS, SEE DTL. DWG. NO. 619-18 FOR PLACEMENT DETAILS.
3. FOR REGULATORY (ALL OTHER), WARNING AND ROUTE MARKER SIGNS, AND THEIR ASSEMBLIES, ON INTERSTATE HIGHWAYS:
   THE CLEARANCE IS 6.1 m FROM THE EDGE OF PAVEMENT IN COLUMN ① FOR STANDARD RURAL CONDITIONS. THE CLEARANCES LISTED IN COLUMNS ② AND ③ REMAIN AS SHOWN.
4. FOR GUIDE SIGNS AND THEIR ASSEMBLIES:
   A) USE THE DIAGRAMS LOCATED ABOVE WHEN PLACING THESE SIGNS IN THE GIVEN RURAL CONDITIONS.
   B) FOR PLACEMENT OF THESE SIGNS IN URBAN CONDITIONS, SEE THE SIGN LOCATION AND SPECIFICATION SHEETS IN THE SIGNING PLANS FOR EACH INDIVIDUAL SIGN.
   C) THE MAXIMUM CLEARANCE OF THESE SIGNS IS 15.2 m IN ANY CONDITION.
   D) SEE DTL. DWG. NO. 619-08 FOR MOUNTING HEIGHTS.
5. WITHIN THE CITY LIMITS OR IN A SIDEWALK AND CURB AREA, MOUNT SIGNS TO HAVE THE PROPER CLEARANCES, BUT AVOID ANY CONFLICT BETWEEN THE POST AND THE MAIN WALKING AREA OF THE SIDEWALK, OR WITH DOORWAYS OR WINDOWS OF ADJACENT BUILDINGS. THE EXACT LOCATION OF THESE SIGN INSTALLATIONS WILL BE DETERMINED BY THE PROJECT MANAGER. SEE DTL. DWG. NO. 619-18 FOR VARIOUS CANTILEVER TYPE MOUNTINGS.
6. EVALUATE SIGNS WITHIN CLEAR ZONES (TABLES BELOW) FOR SUPPORT BREAKAWAY REQUIREMENTS (CONTACT MDT TRAFFIC SECTION FOR CRITERIA).
7. USE HARDWARE MEETING THE REQUIREMENTS OF SECTION 704.

CLEAR ZONE DISTANCES
(IN METERS FROM EDGE OF DRIVING LANE)

DESIGN SPEED	DESIGN ADT	FILL SLOPES			CUT SLOPES		
		6:1 OR FLATTER	5:1 TO 4:1	3:1	3:1	4:1 TO 5:1	6:1 OR FLATTER
60 km/h OR LESS	UNDER 750	2.0-3.0	2.0-3.0	**	2.0-3.0	2.0-3.0	2.0-3.0
	750-1499	3.0-3.5	3.5-4.5	**	3.0-3.5	3.0-3.5	3.0-3.5
	1500-6000	3.5-4.5	4.5-5.0	**	3.5-4.5	3.5-4.5	3.5-4.5
	OVER 6000	4.5-5.0	5.0-5.5	**	4.5-5.0	4.5-5.0	4.5-5.0
70-80 km/h	UNDER 750	3.0-3.5	3.5-4.5	**	2.5-3.0	2.5-3.0	3.0-3.5
	750-1499	4.5-5.0	5.0-6.0	**	3.0-3.5	3.5-4.5	4.5-5.0
	1500-6000	5.0-5.5	6.0-8.0	**	3.5-4.5	4.5-5.0	5.0-5.5
	OVER 6000	6.0-6.5	7.5-8.5	**	4.5-5.0	5.5-6.0	6.0-6.5
90 km/h	UNDER 750	3.5-4.5	4.5-5.5	**	2.5-3.0	3.0-3.5	3.0-3.5
	750-1499	5.0-5.5	6.0-7.5	**	3.0-3.5	4.5-5.0	5.0-5.5
	1500-6000	6.0-6.5	7.5-9.0	**	4.5-5.0	5.0-5.5	6.0-6.5
	OVER 6000	6.5-7.5	8.0-10.0 *	**	5.0-5.5	6.0-6.5	6.5-7.5
100 km/h	UNDER 750	5.0-5.5	6.0-7.5	**	3.0-3.5	3.5-4.5	4.5-5.0
	750-1499	6.0-7.5	8.0-10.0 *	**	3.5-4.5	5.0-5.5	6.0-6.5
	1500-6000	8.0-9.0	10.0-12.0 *	**	4.5-5.5	5.5-6.5	7.5-8.0
	OVER 6000	9.0-10.0 *	11.0-13.5 *	**	6.0-6.5	7.5-8.0	8.0-8.5
110 km/h	UNDER 750	5.5-6.0	6.0-8.0	**	3.0-3.5	4.5-5.0	4.5-4.9
	750-1499	7.5-8.0	8.5-11.0 *	**	3.5-5.0	5.5-6.0	6.0-6.5
	1500-6000	8.5-10.0 *	10.5-13.0 *	**	5.0-6.0	6.5-7.5	8.0-8.5
	OVER 6000	9.0-10.5 *	11.5-14.0 *	**	6.5-7.5	8.0-9.0	8.5-9.0

* WHEN AN INVESTIGATION OR ACCIDENT HISTORY INDICATES A HIGH PROBABILITY OF ACCIDENTS, CLEAR ZONE DISTANCES GREATER THAN 9 m MAY BE PROVIDED AS INDICATED. CLEAR ZONES MAY ALSO BE LIMITED TO 9 m TO PROVIDE A CONSISTENT ROADWAY TEMPLATE WHEN EXPERIENCE WITH PREVIOUS SIMILAR PROJECTS INDICATES SATISFACTORY PERFORMANCE.

** FIXED OBJECTS, INCLUDING SIGN POSTS, SHOULD NOT BE ALLOWED IN THE VICINITY OF THE TOE OF THESE SLOPES. SEE AASHTO ROADSIDE DESIGN GUIDE FOR ADDITIONAL CONSIDERATIONS IN LOCATING SIGNS.

HORIZONTAL CURVE ADJUSTMENTS
(APPLICABLE ON OUTSIDE OF CURVE ONLY)

RADIUS (m)	DESIGN SPEED (km/h)					
	60	70	80	90	100	110
900	1.1	1.1	1.1	1.2	1.2	1.2
700	1.1	1.1	1.2	1.2	1.2	1.3
600	1.1	1.2	1.2	1.2	1.3	1.4
500	1.1	1.2	1.2	1.3	1.3	1.4
450	1.2	1.2	1.3	1.3	1.4	1.5
400	1.2	1.2	1.3	1.3	1.4	
350	1.2	1.2	1.3	1.4	1.5	
300	1.2	1.3	1.4	1.5	1.5	
250	1.3	1.3	1.4	1.5		
200	1.3	1.4	1.5			
150	1.4	1.5				
100	1.5					

TO AVOID GLARE, SKEW SIGN AWAY FROM ROADWAY AT THE ANGLE SHOWN WHEN SIGN IS < 9.1 m FROM SHOULDER. SKEW SIGN TOWARDS ROADWAY AT THE SAME ANGLE IF SIGN IS > 9.1m FROM SHOULDER.

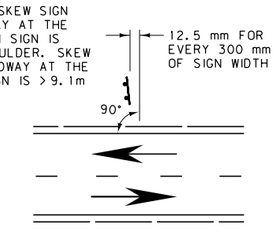

SKEW DIAGRAM

ALL DIMENSIONS ARE MILLIMETERS (mm) UNLESS OTHERWISE NOTED.

DETAILED DRAWING	
REFERENCE STANDARD SPEC. SECTION 619, 704	DWG. NO. 619-00
SIGN CLEARANCES AND MOUNTING HEIGHTS (METRIC)	
EFFECTIVE: SEPTEMBER 2014	

MDT MONTANA DEPARTMENT OF TRANSPORTATION

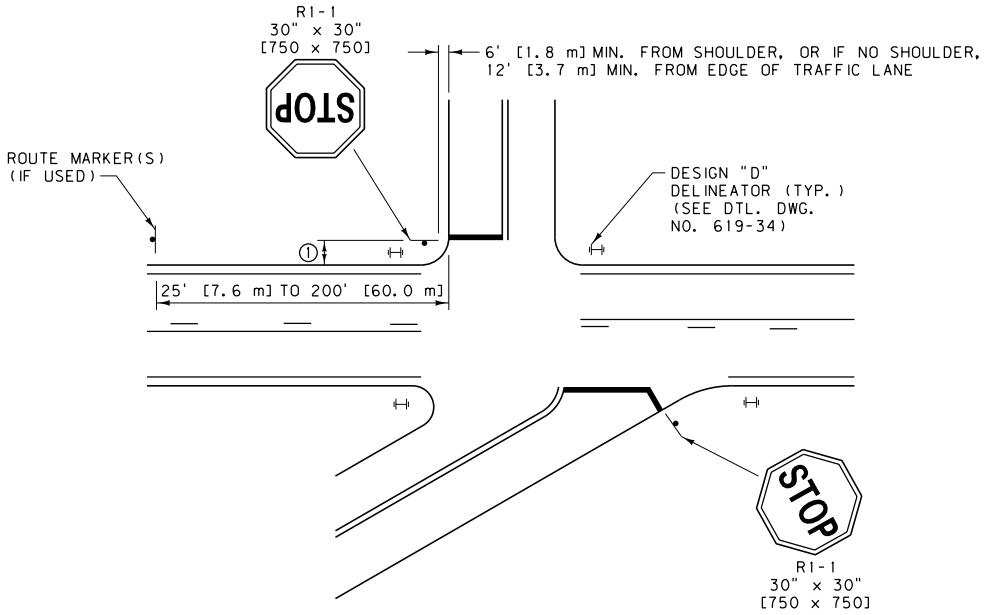

RURAL

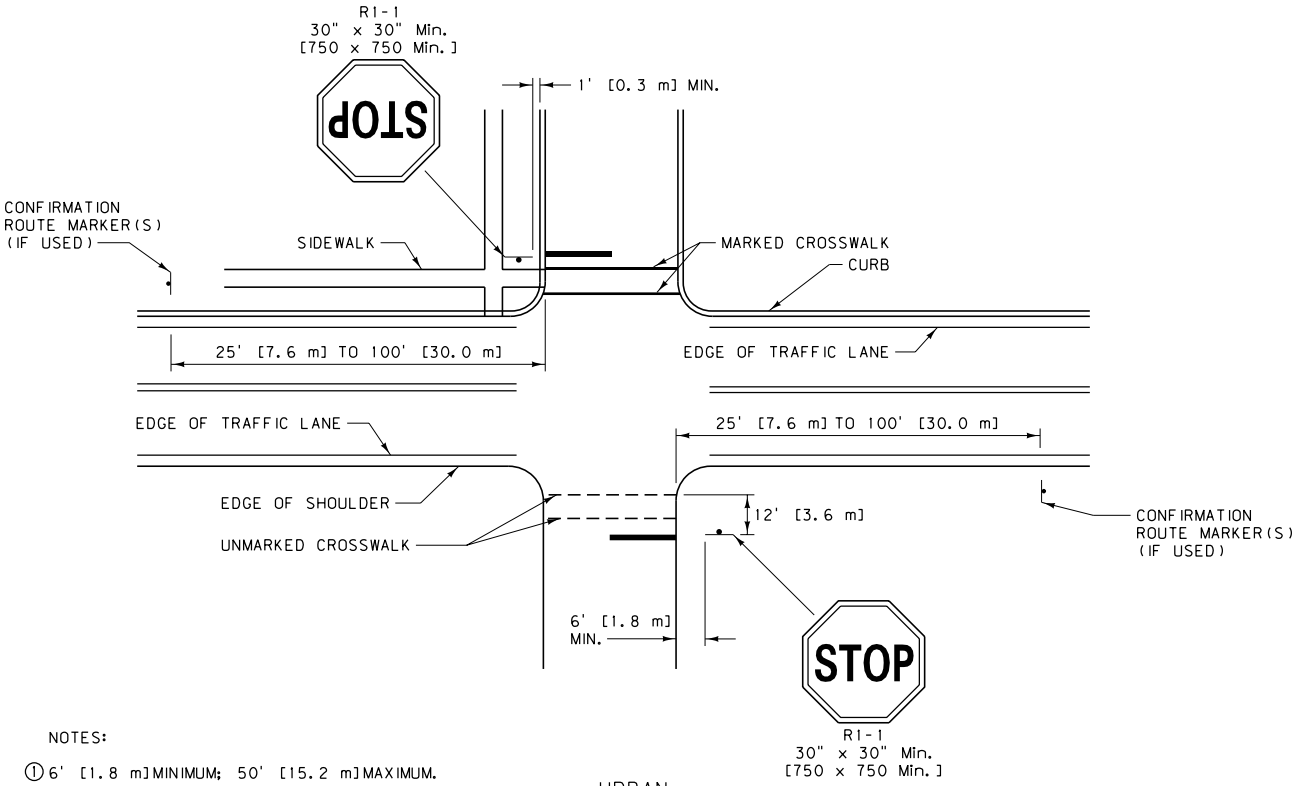

URBAN

NOTES:

1. 6' [1.8 m] MINIMUM; 50' [15.2 m] MAXIMUM.
2. PLACE R1-1 SIGN AT THE BEGINNING OF CURB RADIUS OR SHOULDER RADIUS, OR 4 FEET [1.2 m] IN ADVANCE OF THE MARKED OR UNMARKED CROSSWALK.
3. SEE PLANS FOR FINAL SIGNING AND PAVEMENT MARKING LOCATIONS.
4. USE HARDWARE MEETING THE REQUIREMENTS OF SECTION 704.

UNITS SHOWN IN BRACKETS [] ARE METRIC AND ARE IN MILLIMETERS (mm) UNLESS OTHER UNITS ARE SHOWN.

DETAILED DRAWING	
REFERENCE STANDARD SPEC. SECTION 619, 704	DWG. NO. 619-02
TYPICAL RURAL AND URBAN APPROACHES	
EFFECTIVE: SEPTEMBER 2014	
MDT MONTANA DEPARTMENT OF TRANSPORTATION	

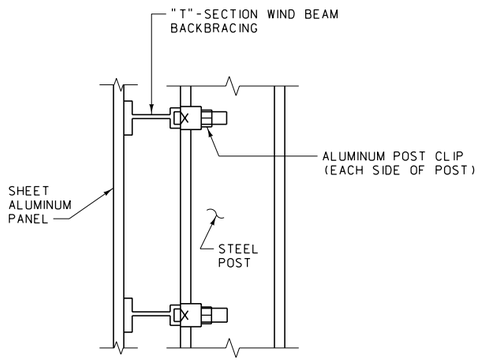

BACKBRACE DETAIL

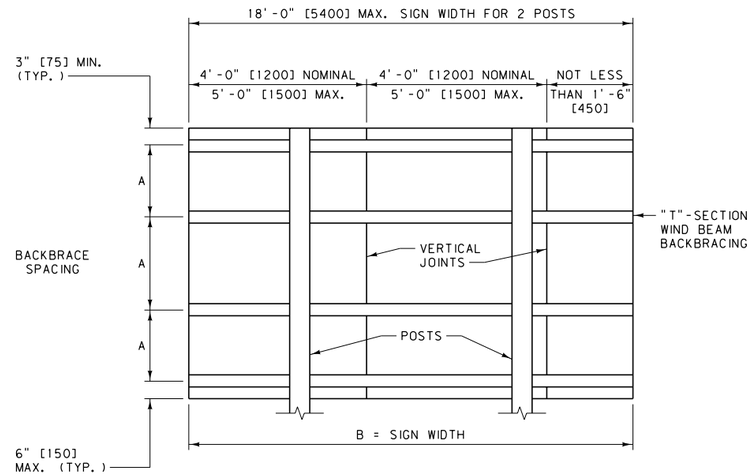

BACKBRACING TABLE - ALUMINUM SIGNS		
MAXIMUM BACKBRACE SPACING "A"	MAXIMUM WIDTH "B"	
	2 POST	3 POST
1'-8"	18'-0"	27'-0"
1'-10"	17'-0"	25'-8"
2'-0"	16'-6"	24'-8"
2'-6"	14'-9"	22'-0"
3'-0"	13'-6"	20'-0"
3'-6"	12'-6"	18'-6"

FOR ALUMINUM PLATE THICKNESS INFORMATION SEE SECTION 704.

METRIC BACKBRACING TABLE - ALUMINUM SIGNS		
MAXIMUM BACKBRACE SPACING "A" (mm)	MAXIMUM WIDTH "B" (mm)	
	2 POST	3 POST
500	5400	8100
550	5100	7700
600	4950	7400
750	4425	6600
900	4050	6000
1050	3750	5550

FOR ALUMINUM PLATE THICKNESS INFORMATION SEE SECTION 704.

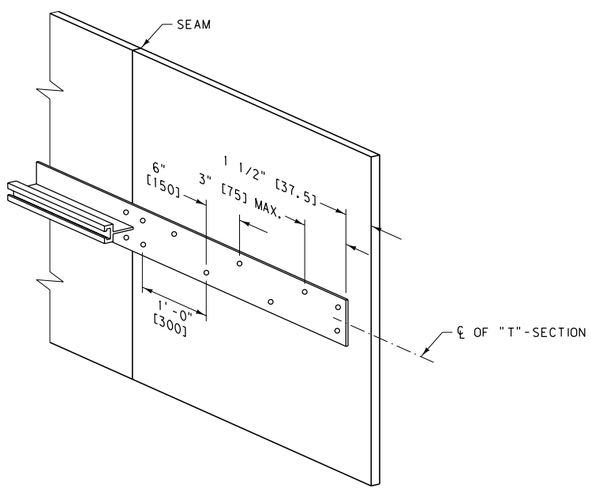

RIVET SPACING DETAIL

LOCATE RIVETS AT 6" [150] ALTERNATE CENTERS ON HORIZONTAL EXTRUDED "T"-SECTION.

DOUBLE RIVETS (TOP AND BOTTOM OR LEFT AND RIGHT OF EXTRUDED "T"-SECTION) AT HORIZONTAL AND VERTICAL JOINTS IN SHEET ALUMINUM FACE AND AT ENDS OF EXTRUDED "T"-SECTION.

COLOR RIVET HEADS TO MATCH ADJACENT SHEETING.

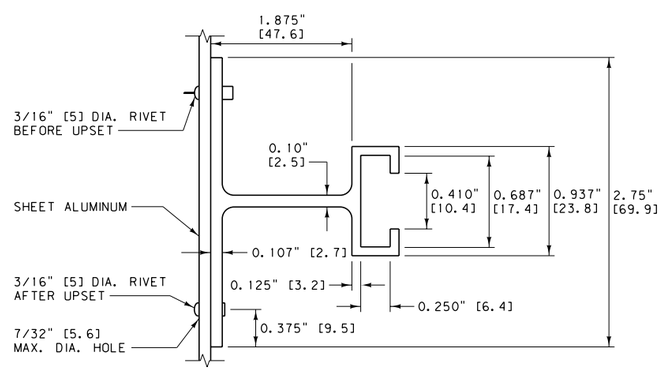

EXTRUDED "T"-SECTION BACKBRACE

NOTES:

1. CONFORM ALL ALUMINUM SIGNS TO SECTIONS 619, AND 704.
2. FOR SIGNS 4'-0" [1200] HIGH BY 6'-0" [1800] LONG OR LESS USE A SINGLE SHEET OF ALUMINUM.
3. DO NOT USE HORIZONTAL JOINTS ON SIGNS 6'-0" [1800] IN HEIGHT AND SMALLER. THE MINIMUM SHEET WIDTH IS 1'-6" [450].
4. SIGNS OVER 6'-0" [1800] HIGH MAY HAVE HORIZONTAL AND VERTICAL JOINTS. THE MINIMUM SHEET SIZE IS 1'-6" [450] WIDE BY 1'-6" [450] HIGH.
5. CLEAN AND DRY POST CLIP NUTS, THEN TORQUE TO 225 INCH POUNDS [25.4 N·m].
6. LOCATE ALL HORIZONTAL JOINTS AT A "T"-SECTION.
7. NO SPLICES ARE ALLOWED IN EXTRUDED "T"-SECTIONS.
8. USE SCREWS, BOLTS AND LOCKWASHERS MEETING THE REQUIREMENTS OF SECTION 704.
9. USE ONLY ALUMINUM RIVETS.
10. THE MAXIMUM GAP BETWEEN INDIVIDUAL SIGN PANELS AT JOINTS IS 1/16" [1.6]AT ANY POINT.
11. THE PROJECT MANAGER MAY APPROVE ADDITIONAL METHODS TO PREVENT LIGHT LEAKAGE THROUGH SIGN PANEL SEAMS.

UNITS SHOWN IN BRACKETS [] ARE METRIC AND ARE IN MILLIMETERS (mm) UNLESS OTHER UNITS ARE SHOWN.

DETAILED DRAWING	
REFERENCE STANDARD SPEC. SECTION 619, 704	DWG. NO. 619-04
ALUMINUM SHEET INCREMENT SIGN CONSTRUCTION DETAILS	
EFFECTIVE: SEPTEMBER 2014	

MDT MONTANA DEPARTMENT OF TRANSPORTATION

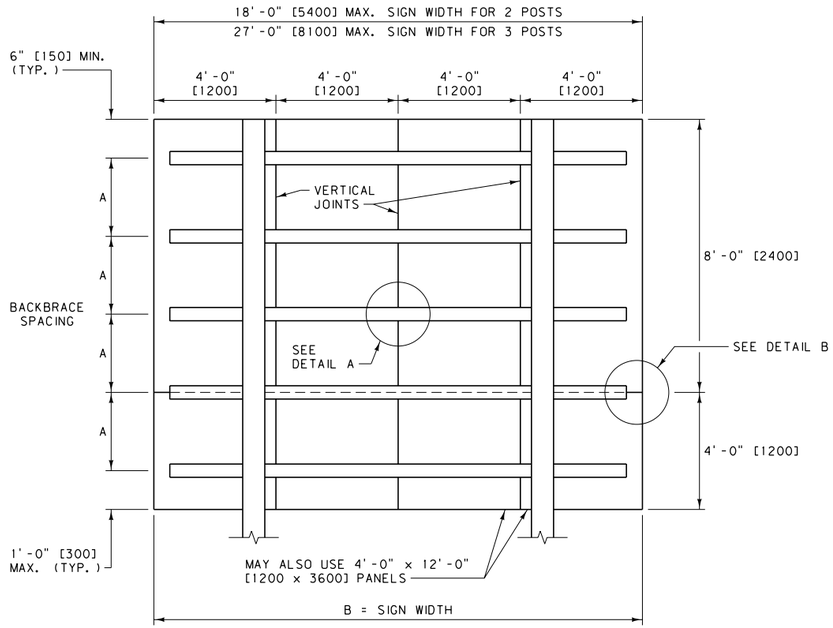

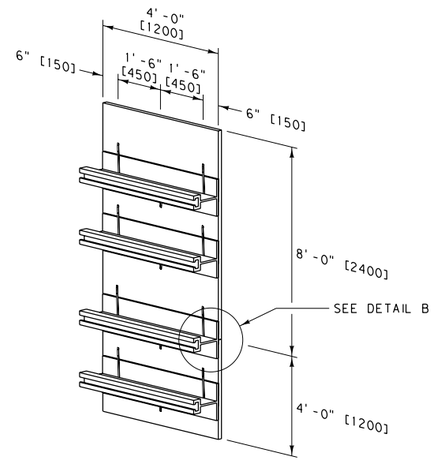

ALUMINUM CLIP PLACEMENT

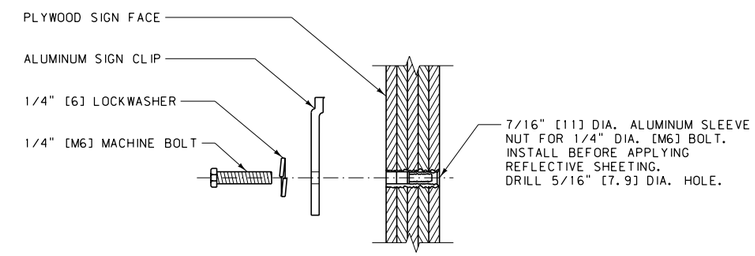

CLIP DETAIL

BACKBRACING TABLE - PLYWOOD SIGNS		
DIMENSIONS		
MAXIMUM BACKBRACE SPACING "A"	MAXIMUM WIDTH "B"	
	2 POST	3 POST
1'-8"	18'-0"	27'-0"
1'-10"	17'-0"	25'-8"
2'-0"	16'-6"	24'-8"
2'-6"	14'-9"	22'-0"
3'-0"	13'-6"	20'-0"
3'-6"	12'-6"	18'-6"
METRIC DIMENSIONS		
MAXIMUM BACKBRACE SPACING "A" (mm)	MAXIMUM WIDTH "B"	
	2 POST (mm)	3 POST (mm)
500	5400	8100
550	5100	7700
600	4950	7400
750	4425	6600
900	4050	6000
1050	3750	5550

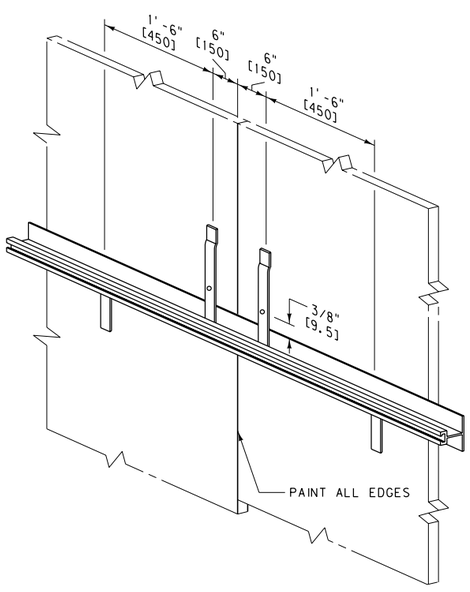

DETAIL A

VERTICAL JOINT

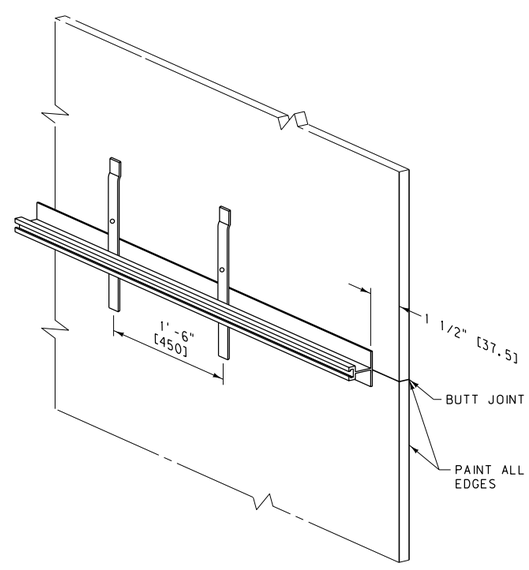

DETAIL B

HORIZONTAL JOINT

NOTES:

1. CONFORM ALL PLYWOOD SIGNS TO SECTIONS 619 AND 704.
2. ON SIGNS 4'-0" [1200]HIGH AND GREATER, DO NOT USE ANY PANELS LESS THAN 4'-0" [1200]IN HEIGHT.
3. DO NOT USE HORIZONTAL JOINTS ON SIGNS LESS THAN 4'-0" [1200]IN HEIGHT.
4. FOR SIGNS WITH WIDTHS THAT ARE NOT IN MULTIPLES OF 4'-0" [1200], PLACE THE ODD LENGTH PANEL ON THE INSIDE EDGE.
5. FOR SIGNS OVER 10'-0" [3000]IN HEIGHT, THE FULL HEIGHT MAY BE OBTAINED WITH PANELS HAVING A FACTORY SCARFED JOINT IN LIEU OF USING STANDARD LENGTH PANEL AS SHOWN.
6. THE MINIMUM SIZE PANEL IS 1'-6" [450]WIDE BY 4'-0" [1200] HIGH.
7. CONSTRUCT PLYWOOD SIGNS OF ONE PIECE OF PLYWOOD UNLESS THE PLANS SPECIFY OTHERWISE FOR SPECIAL DESIGN SIGNS.
8. USE HARDWARE MEETING THE REQUIREMENTS OF SECTION 704.

UNITS SHOWN IN BRACKETS [] ARE METRIC AND ARE IN MILLIMETERS (mm) UNLESS OTHER UNITS ARE SHOWN.

DETAILED DRAWING

REFERENCE STANDARD SPEC. SECTION 619, 704

DWG. NO. 619-06

PLYWOOD SHEET INCREMENT GUIDE SIGN CONSTRUCTION DETAILS

EFFECTIVE: SEPTEMBER 2014

MDT MONTANA DEPARTMENT OF TRANSPORTATION

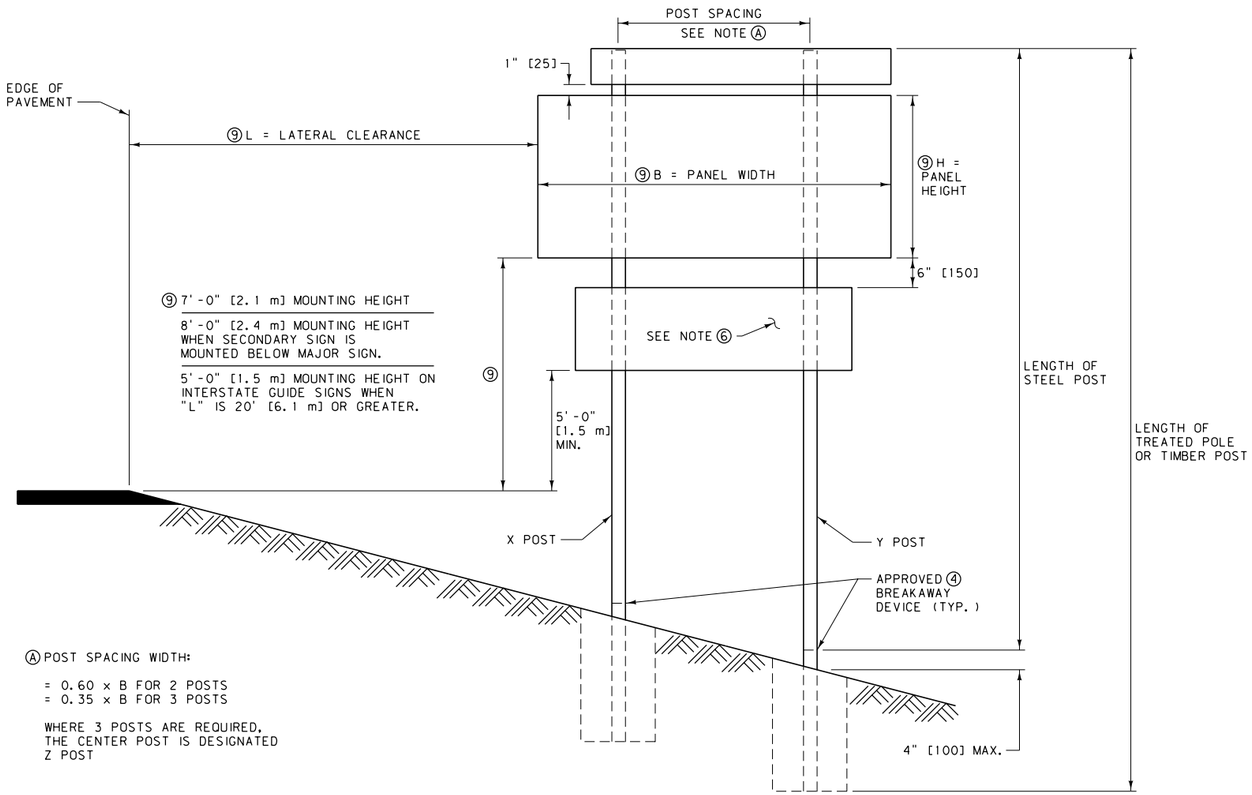

Ⓐ POST SPACING WIDTH:

= 0.60 x B FOR 2 POSTS
= 0.35 x B FOR 3 POSTS

WHERE 3 POSTS ARE REQUIRED, THE CENTER POST IS DESIGNATED Z POST

MOUNTING DETAILS

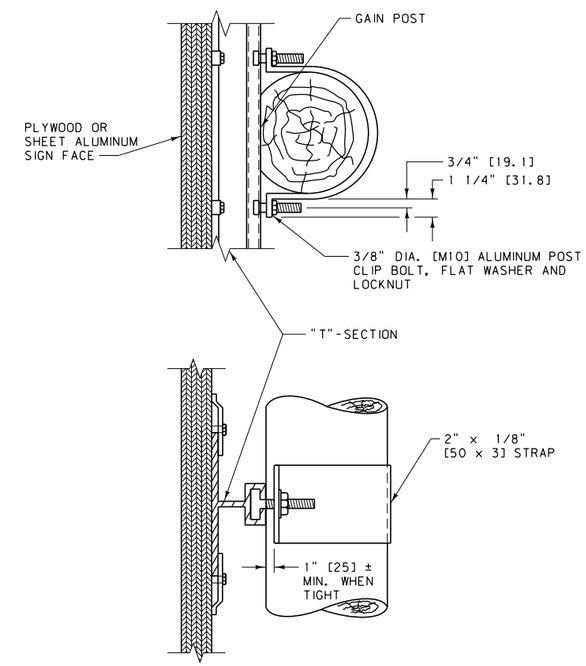

TREATED POLE

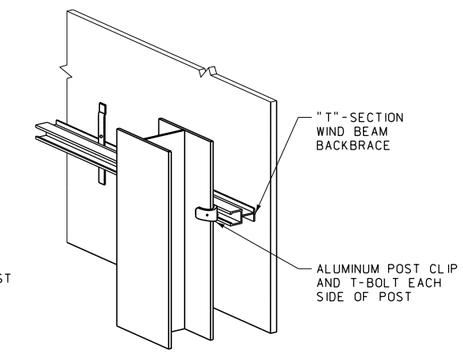

STEEL POST

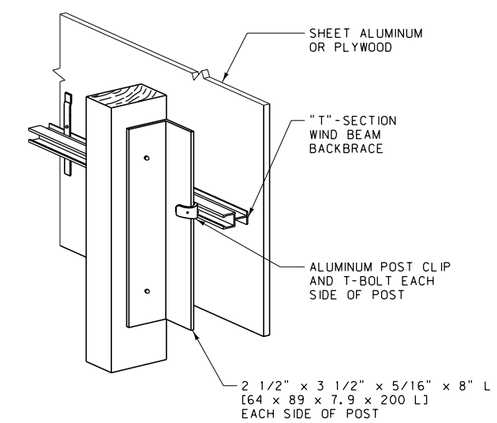

TREATED TIMBER POST

NOTES:

① MOUNTING SYSTEMS SHOWN ARE TYPICAL. OTHER SYSTEMS MAY BE APPROVED BY THE PROJECT MANAGER.

② USE HARDWARE MEETING THE REQUIREMENTS OF SECTION 704.

③ GAIN THE TOP HALF OF WOOD POLES ACCORDING TO THE TABLE ON DTL. DWG. NO. 619-20.

④ SEE THE SIGNING PLANS FOR THE TYPES OF POSTS AND FOUNDATIONS.

⑤ MOUNT ONE-PANEL PLYWOOD SIGNS DIRECTLY TO WOOD POLES OR POSTS, WHEN SPECIFIED IN THE PLANS, BY BOLTING THROUGH THE SIGN PLATE AND THE POLE AS REQUIRED BY THE DETAILED DRAWINGS, SPECIFICATIONS AND DESIGN. USE "T"-SECTION WIND BEAMS WHEN REQUIRED BY DTL. DWG. NO. 619-06.

⑥ SUSPEND LARGE SUPPLEMENTAL SIGNS, ADDED AFTER INITIAL SIGN INSTALLATION, FROM MAJOR SIGN PANEL OR BACKBRACING. ATTACHMENT TO MULTIPLE POSTS/POLES IS NOT ALLOWED.

⑦ USE POST SPACING, POST SIZE AND BREAKAWAY DEVICES SPECIFIED IN THE PLANS AND IN THE SPECIFICATIONS. FOR INFORMATION REGARDING APPROPRIATE BREAKAWAY DEVICES FOR NEW INSTALLATIONS NOT SUPPORTED BY THE PLANS, CONTACT THE TRAFFIC UNIT.

⑧ IN LOCATING SIGNS, AVOID PLACING POSTS IN DITCH BOTTOMS WHERE THEY WOULD IMPEDE DRAINAGE.

⑨ DIMENSIONS ARE SPECIFIED IN THE SIGNING PLANS.

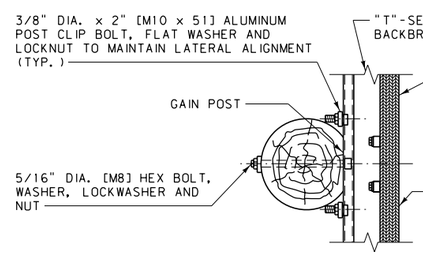

DOUBLE POLE MOUNT

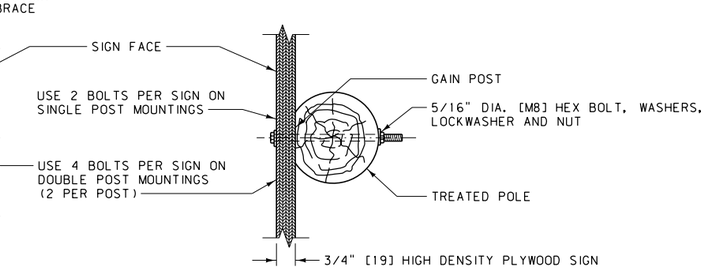

TREATED POLE
SINGLE OR DOUBLE

(USED WHEN "T"-BAR WIND BEAMS NOT REQUIRED)

UNITS SHOWN IN BRACKETS [] ARE METRIC AND ARE IN MILLIMETERS (mm) UNLESS OTHER UNITS ARE SHOWN.

DETAILED DRAWING	
REFERENCE STANDARD SPEC. SECTION 619, 704	DWG. NO. 619-08
GUIDE SIGN CLEARANCE AND MOUNTING DETAILS	
EFFECTIVE: SEPTEMBER 2014	
MDT MONTANA DEPARTMENT OF TRANSPORTATION	

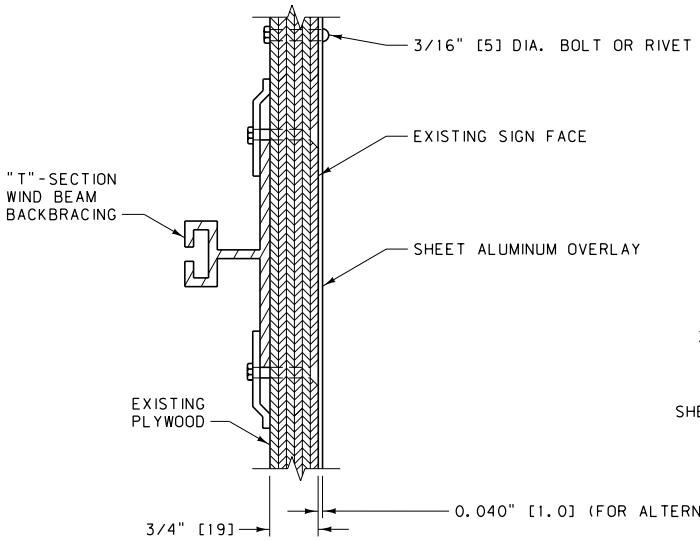

EXISTING PLYWOOD SIGNS

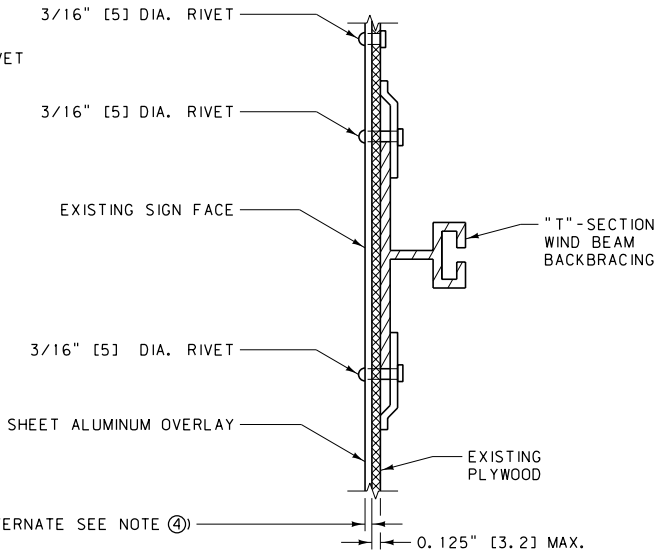

EXISTING ALUMINUM SIGNS

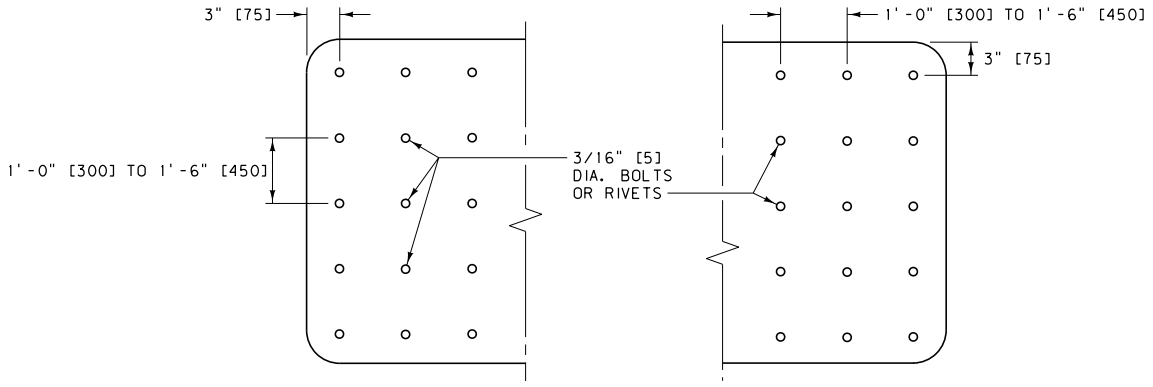

FASTENER PATTERN

NOTES:

1. REMOVE ALL RAISED LETTERS, NUMERALS, SYMBOLS, BORDERS AND PREVIOUS SIGN OVERLAYS TO BE REPLACED, AND CLEAN SIGN FACE TO A SMOOTH SURFACE BEFORE OVERLAYING.

2. ALL LETTERS, NUMERALS, SYMBOLS AND BORDERS ARE TYPE "C" CUTOUT UNLESS OTHERWISE SPECIFIED, AND APPLIED TO THE BACKGROUND SHEETING PRIOR TO FIELD APPLICATION OF THE SIGN.

3. THE SIZE OF ALL GUIDE SIGN OVERLAYS AND LEGENDS MUST BE VERIFIED BY THE PROJECT MANAGER PRIOR TO FABRICATION.

4. AN ADHESIVE-BACKED SHEETING MAY BE USED AS AN ALTERNATIVE ON SIGN WIDTHS OF 6'-0" [1800] OR LESS IF IT IS PREFABRICATED TO A MINIMUM THICKNESS OF 0.005" [.13] AND CONSTRUCTED OF PREAPPLIED REFLECTIVE SHEETING ON ADHESIVE-BACKED ALUMINUM. APPLY ADHESIVE-BACKED OVERLAY SHEETING WHEN AIR AND SURFACE TEMPERATURES ARE ABOVE 50°F (10°C). DO NOT USE THIS TYPE OF OVERLAY MATERIAL ON OVERHEAD SIGNS.

5. PROVIDE A MINIMUM REFLECTIVE SHEETING INTENSITY OF TYPE 4, MEETING THE REQUIREMENTS OF THE STANDARD SPECIFICATIONS, UNLESS SPECIFIED OTHERWISE.

6. APPLY ALL MATERIALS IN ACCORDANCE WITH THE MANUFACTURER'S SPECIFICATIONS AND RECOMMENDATIONS.

7. USE ALUMINUM ALLOY TYPE 6061-T6 OR AA5052-H38. CONVERSION COAT ALL ALUMINUM WITH A PROCESS SUCH AS ALODINE 1200 (OR EQUAL), AND RINSE AND DRY THOROUGHLY. PROTECT IT FROM SOIL BY ACCEPTABLE METHODS.

8. SIGN OVERLAYS MAY REQUIRE REMOVAL OF THE SIGN FROM THE POSTS TO AVOID PROJECTING BOLT HEADS. DO NOT LEAVE WARNING AND REGULATORY SIGNS TO BE OVERLAYED UNDISPLAYED FOR MORE THAN ONE (1) HOUR DURING DAYLIGHT. DO NOT LEAVE GUIDE SIGNS UNDISPLAYED FOR MORE THAN TEN (10) HOURS DURING DAYLIGHT. INSURE SIGNS TO BE OVERLAYED ARE OPERATIONAL PRIOR TO DARKNESS.

9. OVERLAY SIGNS SMALLER THAN 4'-0" x 6'-0" [1200 x 1800] WITH ONE PANEL OF MATERIAL. FOR SEAMS IN LARGE OVERLAYS, USE RIVETS OR BOLTS SPACED AS SHOWN ON THIS DRAWING AND PLACE PARALLEL TO AND NO MORE THAN 3" [75] LATERALLY FROM THE SEAM.

10. USE HARDWARE MEETING THE REQUIREMENTS OF SECTION 704.

UNITS SHOWN IN BRACKETS [] ARE METRIC AND ARE IN MILLIMETERS (mm) UNLESS OTHER UNITS ARE SHOWN.

DETAILED DRAWING	
REFERENCE STANDARD SPEC. SECTION 619, 704	DWG. NO. 619-10
SHEET ALUMINUM OVERLAY	
EFFECTIVE: SEPTEMBER 2014	
MDT MONTANA DEPARTMENT OF TRANSPORTATION	

NOTES:

USE TUBULAR POSTS FOR SINGLE POST MOUNTED SIGNS ONLY.

USE BOLT WITH HEX HEAD, HEX NUT AND 3 WASHERS AT EACH LOCATION. SEE TABLE FOR BOLT DIAMETER AND TORQUE. SEE PROCEDURE FOR BASE CONNECTION ASSEMBLY.

ALL BOLTS ARE ASTM A 325 [325M].

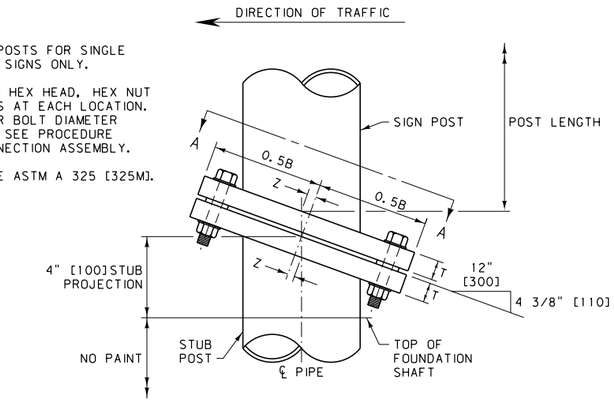

SIGN POST AND STUB POST DETAILS

SECTIONS SHOWN ARE FOR INSTALLATION ON RIGHT SHOULDER AND IN GORE. PLATE SLOT BEVELS ARE OPPOSITE HAND FROM THAT SHOWN FOR INSTALLATIONS ON LEFT SHOULDER.

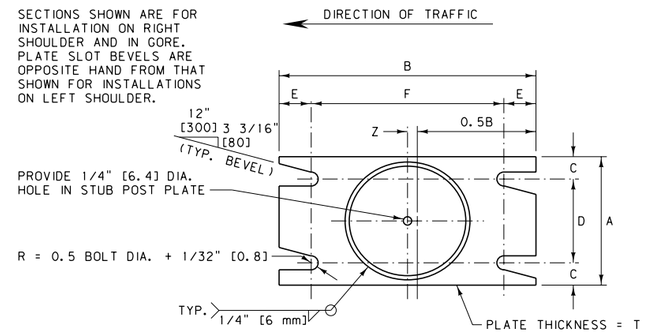

SECTION A-A

BASE PLATE DETAIL

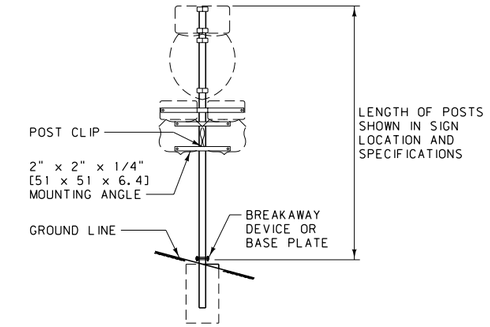

TYPICAL SIGN ELEVATION

FOR DETAILS OF MOUNTING ANGLES SEE DETAILED DRAWING NUMBER 619-16 AND BELOW.

PROCEDURE FOR BASE CONNECTION ASSEMBLY

1. ASSEMBLE POST TO STUB WITH BOLTS AND ONE FLAT WASHER BETWEEN PLATES.
2. SHIM AS REQUIRED TO PLUMB POST.
3. TIGHTEN BOLTS IN A SYSTEMATIC ORDER TO THE PRESCRIBED TORQUE (SEE TABLE BELOW).
4. LOOSEN EACH BOLT AND RETIGHTEN TO PRESCRIBED TORQUE IN THE SAME ORDER AS ORIGINAL TIGHTENING. DO NOT OVERTIGHTEN.
5. BURR THREADS AT JUNCTION WITH NUT USING A CENTER PUNCH TO PREVENT NUT LOOSENING.

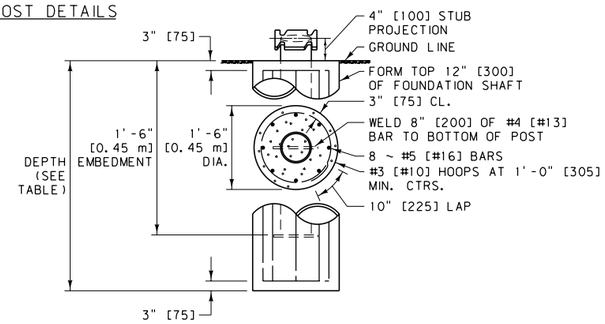

FOUNDATION SHAFT DETAIL

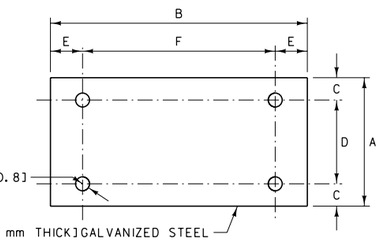

KEEPER PLATE DETAIL

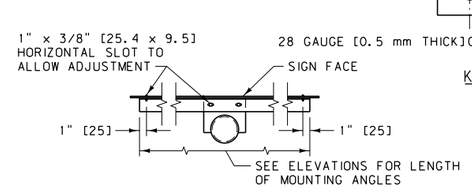

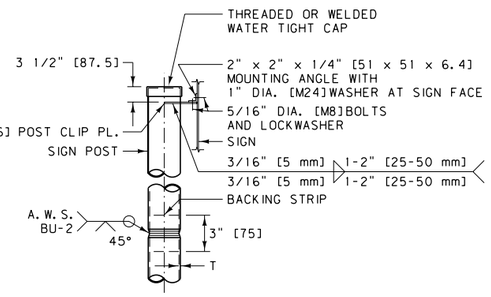

TYPICAL SPLICE

BACKING STRIP THICKNESS = T OR 5/16" [8] MAX. LOCATE SPLICE IN TOP ONE-HALF OF POST.

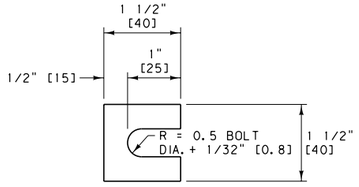

FURNISH TWO 0.012" [0.3] ± THICK AND TWO 0.032" [0.8] ± THICK SHIMS PER POST. USE SHIMS FABRICATED FROM BRASS SHIM STOCK OR STRIP CONFORMING TO ASTM B 36 [36M].

SHIM DETAIL

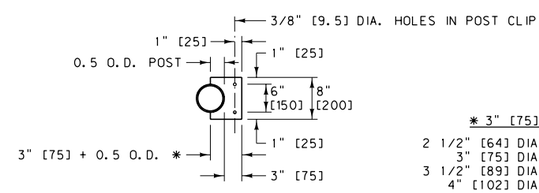

✱ 3" [75]+ 0.5 O.D. FOR:

2 1/2" [64] DIA. PIPE = 4 7/16" [111.5]
3" [75] DIA. PIPE = 4 3/4" [119.5]
3 1/2" [89] DIA. PIPE = 5" [126.0]
4" [102] DIA. PIPE = 5 1/4" [132.0]

POST CLIP DETAILS

BASE CONNECTION DATA											FOUNDATION	
NOMINAL PIPE DIA.	BOLT SIZE	BOLT TORQUE	A	B	C	D	E	F	T	Z	FOOTING DIAMETER	FOOTING DEPTH
3"	1/2" DIA. x 2 1/2"	240 IN.LB.	4 1/2"	7 1/2"	1"	2 1/2"	3/4"	6"	3/4"	5/16"	1'-6"	3'-0"
3 1/2" 4"	1/2" DIA. x 2 1/2"	240 IN.LB.	5 1/2"	8 1/2"	1"	3 1/2"	3/4"	7"	3/4"	5/16"	1'-6"	3'-0"
5"	5/8" DIA. x 3 1/4"	480 IN.LB.	6 1/2"	9 3/4"	1 1/4"	4"	7/8"	8"	1"	3/8"	1'-6"	4'-0"
6"	3/4" DIA. x 3 1/2"	780 IN.LB.	7 1/2"	11 1/4"	1 1/4"	5"	1"	9 1/4"	1"	3/8"	1'-6"	4'-6"

METRIC BASE CONNECTION DATA											METRIC FOUNDATION	
NOMINAL PIPE DIA.	BOLT SIZE	BOLT TORQUE	A (mm)	B (mm)	C (mm)	D (mm)	E (mm)	F (mm)	T (mm)	Z (mm)	FOOTING DIAMETER	FOOTING DEPTH
75 mm	M12 x 63	27 N·m	114.3	190.5	25.4	63.5	19.05	152.4	19	8	0.45 m	0.9 m
89 mm 102 mm	M12 x 63	27 N·m	139.7	215.9	25.4	88.9	19.05	177.8	19	8	0.45 m	0.9 m
127 mm	M16 x 83	54 N·m	165.1	247.66	31.75	101.6	22.23	203.2	25	10	0.45 m	1.2 m
152 mm	M20 x 89	88 N·m	190.5	285.75	31.75	127.0	25.4	234.95	25	10	0.45 m	1.4 m

TABLE OF WEIGHTS		
NOMINAL PIPE DIA.	NOMINAL WEIGHT (LB./FT.) OF PIPE	WEIGHT OF BASE PLATE & STUB POST (LB.)
3"	7.58	28.03
3 1/2"	9.11	35.85
4"	10.79	38.44
5"	14.62	61.51
6"	18.97	81.54

METRIC TABLE OF WEIGHTS		
NOMINAL PIPE DIA. (mm)	NOMINAL WEIGHT (kg/m) OF PIPE	WEIGHT OF BASE PLATE & STUB POST (kg)
75	11.28	12.71
89	13.56	16.26
102	16.06	17.44
127	21.76	27.90
152	28.23	36.99

NOTES:

1. USE STEEL PIPE CONFORMING TO THE REQUIREMENTS OF ASTM A 53 [53M], TYPE E OR S, GRADE B OR A 500 [500M], GRADE B.
2. USE CLASS GENERAL CONCRETE WITH A SMOOTH FINISH ON TOP. FORM TOP 12 INCHES [300] OF FOUNDATION.
3. SUBMIT SHOP PLANS FOR APPROVAL PRIOR TO FABRICATION.
4. FOR SIGN PLACEMENT AND DETAILS SEE THE SIGNING DETAILED DRAWINGS.
5. GALVANIZE PIPE PER SECTION 711.
6. EXCEPT AS OTHERWISE APPROVED BY THE PROJECT MANAGER, PAINT STRUCTURAL STEEL WITH ONE SHOP COAT AND ONE FIELD COAT OF ZINC RICH BASED PAINT AND ONE FIELD COAT OF ALUMINUM PAINT AS SPECIFIED IN THE STANDARD SPECIFICATIONS, ON ALL SURFACES NOT IN CONTACT WITH THE CONCRETE.
7. FRANGIBLE BOLT BREAKAWAY SYSTEMS LISTED ON THE DEPARTMENT'S QUALIFIED PRODUCTS LIST ARE ALLOWED TO BE USED IN PLACE OF THE DESIGN SHOWN HERE AS AN EQUAL OPTION (PER PROJECT MANAGER'S APPROVAL).
8. USE HARDWARE MEETING THE REQUIREMENTS OF SECTION 704.

UNITS SHOWN IN BRACKETS [] ARE METRIC AND ARE IN MILLIMETERS (mm) UNLESS OTHER UNITS ARE SHOWN.

DETAILED DRAWING

REFERENCE STANDARD SPEC. SECTION 556, 619, 704, 711

DWG. NO. 619-12

TUBULAR SIGN POST DETAILS

EFFECTIVE: SEPTEMBER 2014

MDT MONTANA DEPARTMENT OF TRANSPORTATION

BASE CONNECTION DATA											FUSE PLATE DATA											FOUNDATION DATA				
POST SIZE	BOLT SIZE	BOLT TORQUE	DIMENSIONS							BASE PLATES (LB.)	DIMENSIONS									BOLT DIA.	FUSE DEVICE (LB.)	FTG. DEPTH	STUB LENGTH	FTG. DIA.	BAR C SIZE	STUB POST (LB.)
			A	B	C	D	E	t_1	W		F	G	H	J	K	L	N	t_3	Y							
W4 x 13 M4 x 13	5/8" DIA. x 2 3/4"	40 FT. LB.	8 1/2"	5"	3/4"	2 3/4"	1 1/8"	3/4"	5/16"	21.58	3 3/4"	2"	1 1/8"	4"	2 1/4"	7/8"	5/8"	3/8"	13/16"	5/8"	1.60	3'-6"	2'-0"	1'-6"	#5	26.00
W8 x 18			12 1/2"	6 1/4"	3/4"	4"	1 1/8"	3/4"	5/16"	37.00	4 1/2"	2 1/2"	1 1/4"	5 1/4"	2 3/4"	1 1/4"	3/4"	1/2"	7/8"	3/4"	3.27	5'-6"	2'-6"	2'-0"	#7	45.00
W8 x 24	3/4" DIA. x 3 1/2"	65 FT. LB.	13"	7 1/2"	3/4"	5"	1 1/4"	1"	5/16"	60.86	4 3/4"	2 1/2"	1 1/2"	6"	3 1/2"	1 1/4"	3/4"	9/16"	15/16"	3/4"	4.66	7'-0"	3'-0"	2'-0"	#9	72.00
W12 x 30			17"	7 1/2"	7/8"	5"	1 1/4"	1"	5/16"	78.54	5 3/8"	3"	1 1/2"	6 1/2"	3 1/2"	1 1/2"	7/8"	9/16"	1 3/16"	7/8"	5.42	8'-0"	3'-0"	2'-6"	#9	90.00
S3 x 5.7	1/2" DIA. x 2 1/2"	20 FT. LB.	8"	3"	3/4"	1 1/2"	3/4"	5/8"	1/4"	10.37	3 1/8"	1 1/2"	1 1/8"	2 5/8"	1 1/2"	9/16"	1/2"	1/4"	11/16"	1/2"	0.64	3'-6"	1'-6"	1'-6"	#4	8.55
S4 x 7.7			8"	3"	3/4"	1 1/2"	3/4"	5/8"	1/4"	10.45	3 1/8"	1 1/2"	1 1/8"	2 5/8"	1 1/2"	9/16"	1/2"	1/4"	13/16"	1/2"	0.64	3'-6"	1'-6"	1'-6"	#4	11.55
S5 x 10.0	5/8" DIA. x 2 3/4"	40 FT. LB.	9 1/2"	4"	3/4"	2"	1"	3/4"	1/4"	19.08	3 1/8"	1 1/2"	1 1/8"	3"	1 7/8"	9/16"	1/2"	1/4"	13/16"	1/2"	0.66	3'-6"	1'-6"	1'-6"	#5	15.00

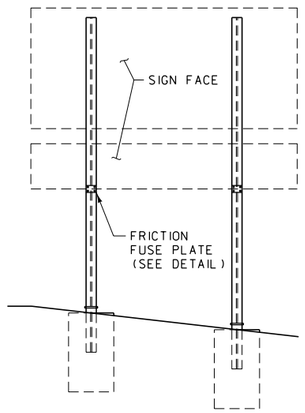

TYPICAL SIGN ELEVATION

PROCEDURE FOR BASE CONNECTION ASSEMBLY

1. ASSEMBLE POST TO STUB WITH BOLTS AND ONE FLAT WASHER BETWEEN PLATES.
2. SHIM AS REQUIRED TO PLUMB POST.
3. TIGHTEN BOLTS IN A SYSTEMATIC ORDER TO THE PRESCRIBED TORQUE (SEE TABLE).
4. LOOSEN EACH BOLT AND RETIGHTEN TO PRESCRIBED TORQUE IN THE SAME ORDER AS ORIGINAL TIGHTENING. DO NOT OVERTIGHTEN.
5. BURR THREADS AT JUNCTION WITH NUT USING A CENTER PUNCH TO PREVENT NUT LOOSENING.

NOTE:
ALL BOLTS MUST BE ASTM A 325 AND BE TIGHTENED BY USE OF A DIRECT TENSION INDICATING DEVICE (LOAD INDICATING WASHER) IN ACCORDANCE WITH THE MANUFACTURER'S SPECIFICATIONS.

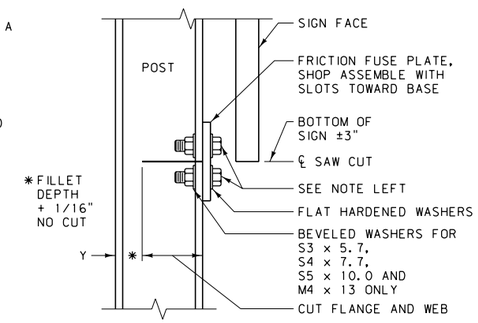

FRICTION FUSE PLATE DETAIL

DO NOT USE ON SINGLE POST SIGNS. NOT NECESSARY WHEN SIGN IS MOUNTED BEHIND GUARDRAIL OR BARRIER RAIL.

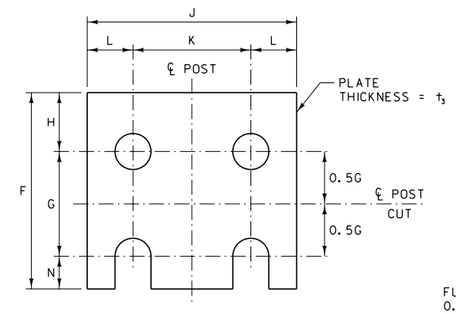

HOLE DIAMETER = BOLT DIA. + 1/16"

FRICTION FUSE PLATE DETAIL

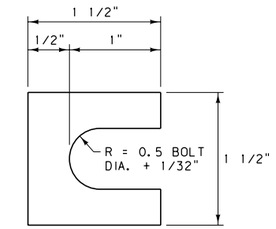

FURNISH TWO 0.012" ± THICK AND TWO 0.032" ± THICK SHIMS PER POST. USE SHIMS FABRICATED FROM BRASS SHIM STOCK OR STRIP CONFORMING TO ASTM B 36.

SHIM DETAIL

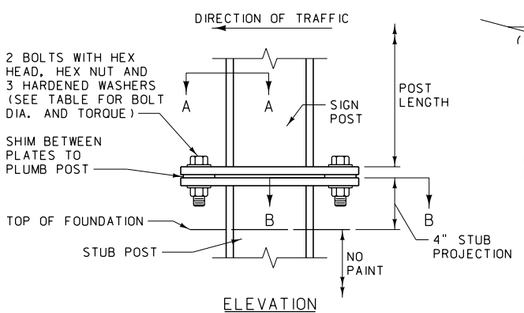

ELEVATION

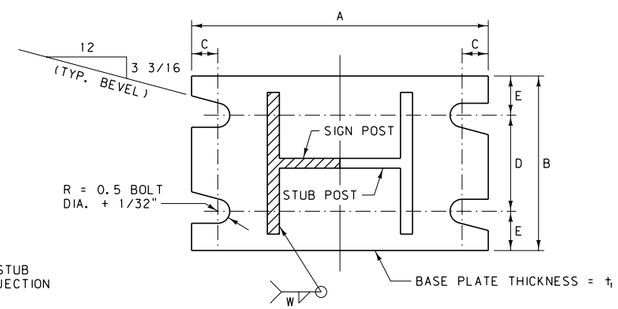

SECTION A-A SECTION B-B

SIGN POST AND STUB POST DETAIL "A"

NOTE:
SECTIONS SHOWN ARE FOR INSTALLATIONS ON RIGHT SHOULDER AND IN GORE. PLATE SLOT BEVELS ARE OPPOSITE HAND FROM THAT SHOWN FOR INSTALLATIONS ON LEFT SHOULDER.

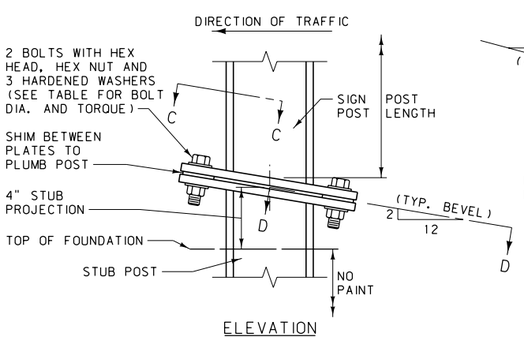

ELEVATION

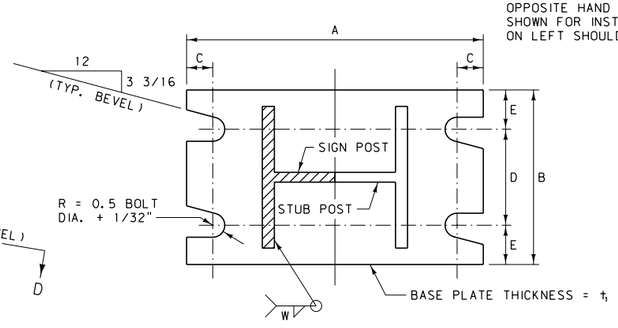

SECTION C-C SECTION D-D

SIGN POST AND STUB POST DETAIL "B"

USE ONLY WITH SINGLE POST SIGNS

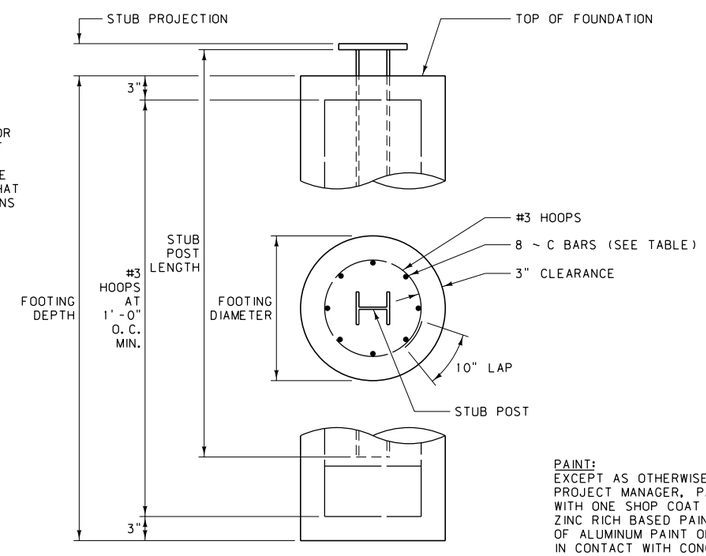

FOUNDATION DETAIL

NOTES:

1. USE CLASS GENERAL CONCRETE WITH A SMOOTH FINISH ON TOP. FORM TOP 12 INCHES OF FOUNDATION.
2. SEE THE STANDARD SPECIFICATIONS FOR REQUIREMENTS GOVERNING STRUCTURAL STEELS AND THEIR FABRICATIONS. TO AVOID OVERSIGHT, NOTE THESE REQUIREMENTS ON THE SHOP DRAWINGS.
3. SUBMIT SHOP PLANS FOR APPROVAL BEFORE FABRICATION BEGINS.
4. FOR GUIDE SIGN PLACEMENT AND DETAILS, SEE SIGNING DTL. DWG. NO. 619-08.
5. FRANGIBLE BOLT BREAKAWAY SYSTEMS LISTED ON THE DEPARTMENT'S QUALIFIED PRODUCTS LIST ARE ALLOWED TO BE USED IN PLACE OF THE DESIGN SHOWN HERE AS AN EQUAL OPTION (PER PROJECT MANAGER'S APPROVAL).
6. USE HARDWARE MEETING THE REQUIREMENTS OF SECTION 704.

PAINT:
EXCEPT AS OTHERWISE APPROVED BY THE PROJECT MANAGER, PAINT STRUCTURAL STEEL WITH ONE SHOP COAT AND ONE FIELD COAT OF ZINC RICH BASED PAINT AND ONE FIELD COAT OF ALUMINUM PAINT ON ALL SURFACES NOT IN CONTACT WITH CONCRETE.

DETAILED DRAWING

REFERENCE
STANDARD SPEC.
SECTION 619, 704

DWG. NO.
619-13

STRUCTURAL STEEL
SIGN POST DETAILS

EFFECTIVE: SEPTEMBER 2014

MDT MONTANA DEPARTMENT OF TRANSPORTATION

BASE CONNECTION DATA											FUSE PLATE DATA											FOUNDATION DATA				
POST SIZE (mm x kg/m)	BOLT SIZE	BOLT TORQUE	DIMENSIONS							BASE PLATES (kg)	DIMENSIONS									BOLT DIA.	FUSE DEVICE (kg)	FTG. DEPTH	STUB LENGTH	FTG. DIA.	BAR C SIZE	STUB POST (kg)
			A	B	C	D	E	t_1	W		F	G	H	J	K	L	N	t_3	Y							
W100 x 19 M100 x 19.3	M16 x 70	54 N·m	215	125	18.6	69.8	27.6	19	8	9.79	95	50.8	28.2	100	57.2	21.4	16.0	10	20.6	M16	0.73	1.1 m	600	0.45 m	#16	11.79
W200 x 27			320	160	20.3	101.6	29.2	19	8	16.78	115	63.5	31.5	135	69.8	32.6	20.0	13	22.2	M20	1.48	1.7 m	750	0.60 m	#22	20.41
W200 x 36	M20 x 89	88 N·m	330	190	19.0	127.0	31.5	25	8	27.61	120	63.5	36.5	150	88.8	30.6	20.0	14	23.8	M20	2.11	2.1 m	900	0.60 m	#29	32.66
W310 x 45			430	190	21.3	127.0	31.5	25	8	35.63	135	76.2	38.8	165	88.8	38.1	22.0	14	30.2	M22	2.46	2.4 m	900	0.75 m	#29	40.82
S75 x 8	M12 x 63	27 N·m	205	75	20.0	38.0	18.5	16	6	4.70	80	38.1	29.9	65	38.0	13.5	12.0	6	17.5	M12	0.29	1.1 m	450	0.45 m	#13	3.88
S100 x 11			205	75	20.0	38.0	18.5	16	6	4.74	80	38.1	29.9	65	38.0	13.5	12.0	6	20.6	M12	0.29	1.1 m	450	0.45 m	#13	5.24
S130 x 15	M16 x 70	54 N·m	240	100	18.4	50.8	24.6	19	6	8.65	80	38.1	29.9	75	47.6	13.7	12.0	6	20.6	M12	0.30	1.1 m	450	0.45 m	#16	6.80

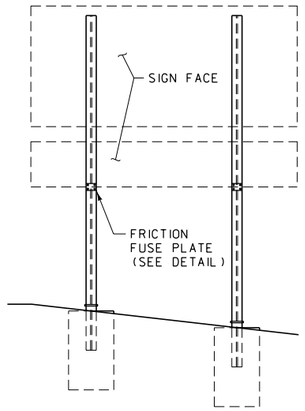

TYPICAL SIGN ELEVATION

PROCEDURE FOR BASE CONNECTION ASSEMBLY

1. ASSEMBLE POST TO STUB WITH BOLTS AND ONE FLAT WASHER BETWEEN PLATES.
2. SHIM AS REQUIRED TO PLUMB POST.
3. TIGHTEN BOLTS IN A SYSTEMATIC ORDER TO THE PRESCRIBED TORQUE (SEE TABLE).
4. LOOSEN EACH BOLT AND RETIGHTEN TO PRESCRIBED TORQUE IN THE SAME ORDER AS ORIGINAL TIGHTENING. DO NOT OVERTIGHTEN.
5. BURR THREADS AT JUNCTION WITH NUT USING A CENTER PUNCH TO PREVENT NUT LOOSENING.

NOTE:
ALL BOLTS MUST BE ASTM A 325M AND BE TIGHTENED BY USE OF A DIRECT TENSION INDICATING DEVICE (LOAD INDICATING WASHER) IN ACCORDANCE WITH THE MANUFACTURER'S SPECIFICATIONS.

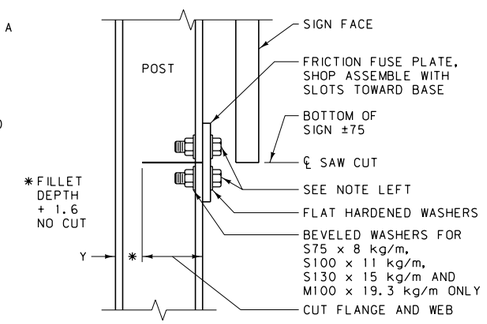

FRICTION FUSE PLATE DETAIL

DO NOT USE ON SINGLE POST SIGNS. NOT NECESSARY WHEN SIGN IS MOUNTED BEHIND GUARDRAIL OR BARRIER RAIL.

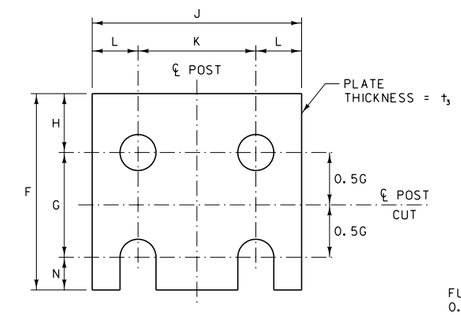

HOLE DIAMETER = BOLT DIA. + 1.6

FRICTION FUSE PLATE DETAIL

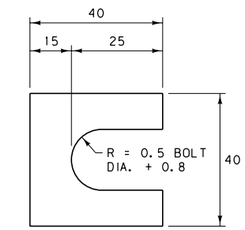

FURNISH TWO 0.3 mm ± THICK AND TWO 0.8 mm ± THICK SHIMS PER POST. USE SHIMS FABRICATED FROM BRASS SHIM STOCK OR STRIP CONFORMING TO ASTM B 36M.

SHIM DETAIL

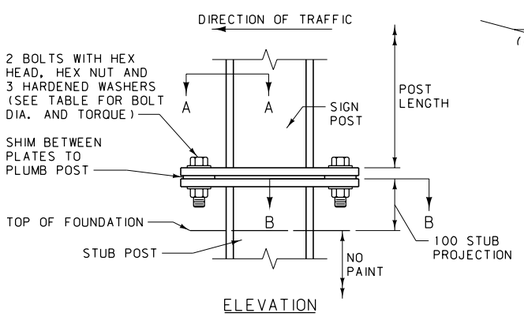

ELEVATION

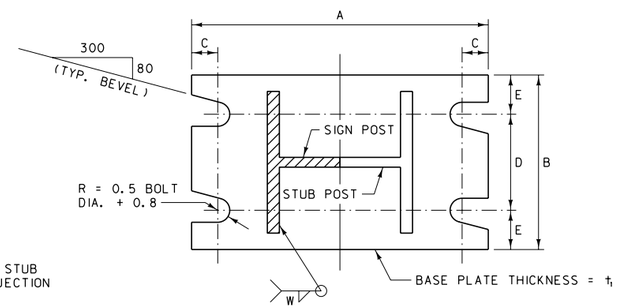

SECTION A-A

SECTION B-B

SIGN POST AND STUB POST DETAIL "A"

NOTE:
SECTIONS SHOWN ARE FOR INSTALLATIONS ON RIGHT SHOULDER AND IN GORE. PLATE SLOT BEVELS ARE OPPOSITE HAND FROM THAT SHOWN FOR INSTALLATIONS ON LEFT SHOULDER.

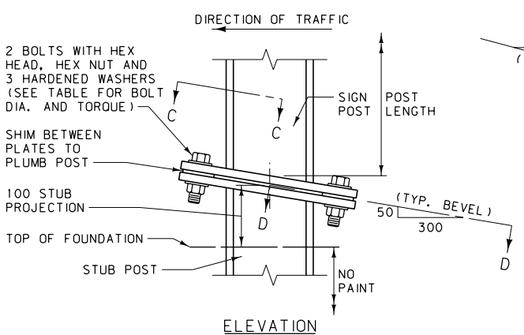

ELEVATION

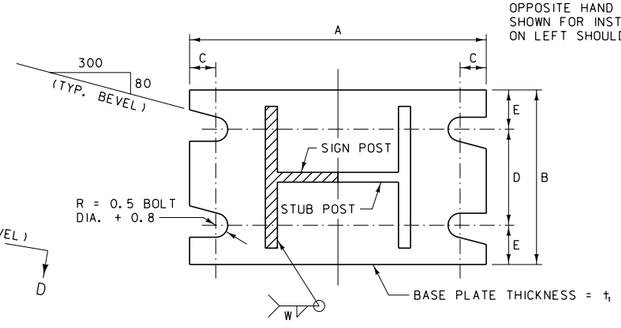

SECTION C-C

SECTION D-D

SIGN POST AND STUB POST DETAIL "B"

USE ONLY WITH SINGLE POST SIGNS

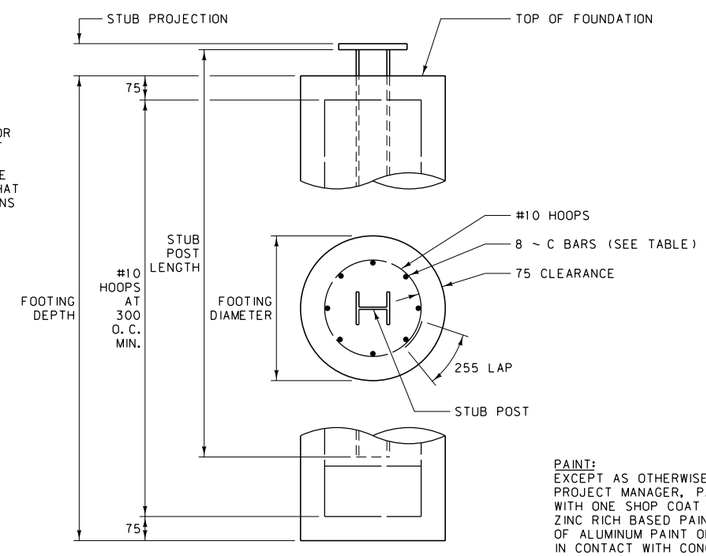

FOUNDATION DETAIL

NOTES:

1. USE CLASS GENERAL CONCRETE WITH A SMOOTH FINISH ON TOP. FORM TOP 300 mm OF FOUNDATION.
2. SEE THE STANDARD SPECIFICATIONS FOR REQUIREMENTS GOVERNING STRUCTURAL STEELS AND THEIR FABRICATIONS. TO AVOID OVERSIGHT, NOTE THESE REQUIREMENTS ON THE SHOP DRAWINGS.
3. SUBMIT SHOP PLANS FOR APPROVAL BEFORE FABRICATION BEGINS.
4. FOR GUIDE SIGN PLACEMENT AND DETAILS, SEE SIGNING DTL. DWG. NO. 619-08.
5. FRANGIBLE BOLT BREAKAWAY SYSTEMS LISTED ON THE DEPARTMENT'S QUALIFIED PRODUCTS LIST ARE ALLOWED TO BE USED IN PLACE OF THE DESIGN SHOWN HERE AS AN EQUAL OPTION (PER PROJECT MANAGER'S APPROVAL).
6. USE HARDWARE MEETING THE REQUIREMENTS OF SECTION 704.

PAINT:
EXCEPT AS OTHERWISE APPROVED BY THE PROJECT MANAGER, PAINT STRUCTURAL STEEL WITH ONE SHOP COAT AND ONE FIELD COAT OF ZINC RICH BASED PAINT AND ONE FIELD COAT OF ALUMINUM PAINT ON ALL SURFACES NOT IN CONTACT WITH CONCRETE.

ALL DIMENSIONS ARE MILLIMETERS (mm) UNLESS OTHERWISE NOTED.

DETAILED DRAWING

REFERENCE
STANDARD SPEC.
SECTION 619, 704

DWG. NO.
619-13

STRUCTURAL STEEL
SIGN POST DETAILS
(METRIC)

EFFECTIVE: SEPTEMBER 2014

MDT MONTANA DEPARTMENT OF TRANSPORTATION

TELESCOPED SQUARE TUBES SIGN POST INSTALLATION ON SLIP BASE

AS NOTED BY THE STAR SYMBOL ★ ON THE LOCATION AND SPECIFICATION SHEETS.

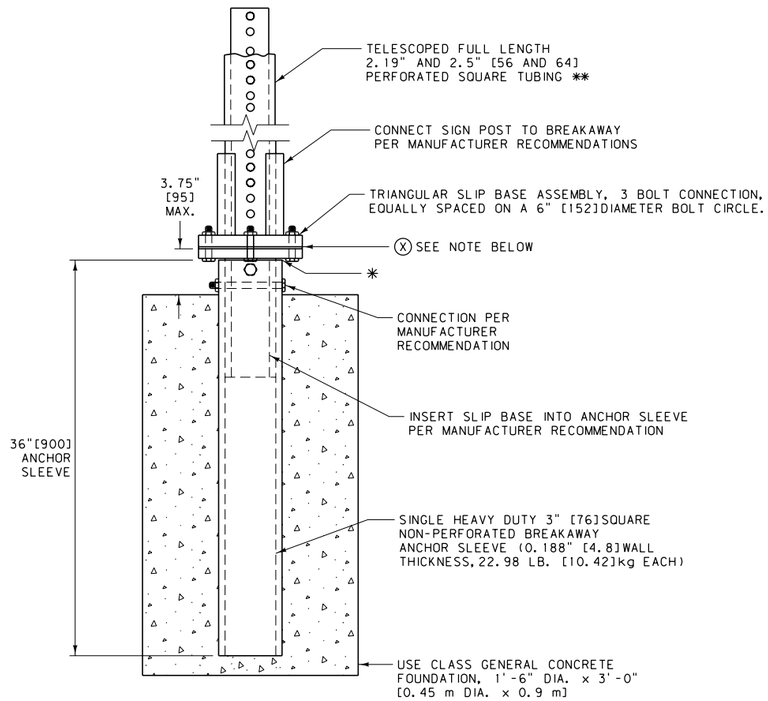

✱ SHIM AS REQUIRED PER MANUFACTURER RECOMMENDATION TO TAKE UP TOLERANCE BETWEEN SLIP BASE STUB AND ANCHOR SLEEVE.

✱✱ SUPPORT		
TUBE SIZE	WEIGHT	WALL THICKNESS
2.19" [56]	3.45 LB./FT. [5.13 kg/m]	0.135" (10 GAUGE) [3.4 (10 GAUGE)]
2.5" [64]	3.8 LB./FT. [5.66 kg/m]	0.135" (10 GAUGE) [3.4 (10 GAUGE)]

SINGLE SQUARE TUBE SIGN TO POST INSTALLATION ON SLIP BASE

AS NOTED BY THE CIRCLE SYMBOL ● ON THE LOCATION AND SPECIFICATION SHEETS.

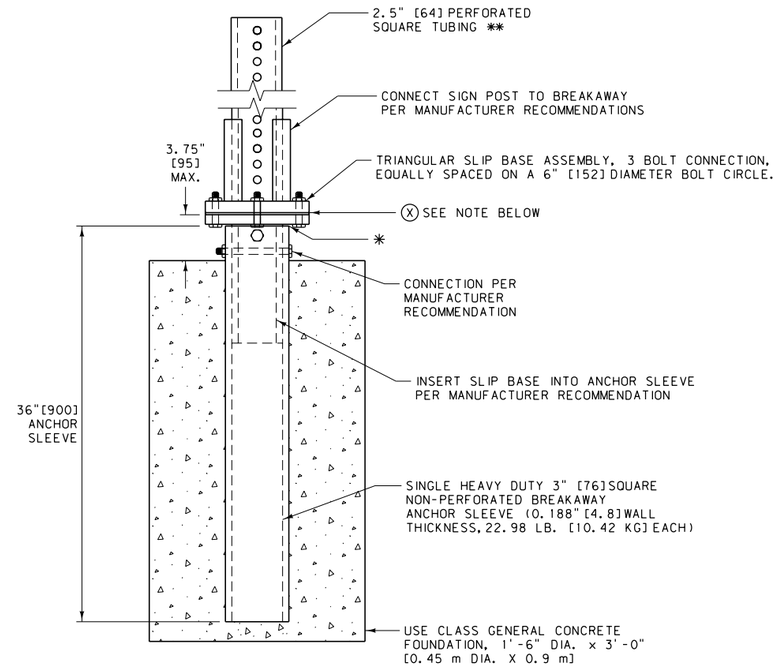

✱ SHIM AS REQUIRED PER MANUFACTURER RECOMMENDATION TO TAKE UP TOLERANCE BETWEEN SLIP BASE STUB AND ANCHOR SLEEVE.

✱✱ SUPPORT		
TUBE SIZE	WEIGHT	WALL THICKNESS
2.5" [64]	3.8 LB./FT. [5.66 kg/m]	0.135" (10 GAUGE) [3.4 (10 GAUGE)]

SINGLE SQUARE TUBE SIGN POST INSTALLATION

AS NOTED BY THE TRIANGLE SYMBOL ▲ ON THE LOCATION AND SPECIFICATION SHEETS.

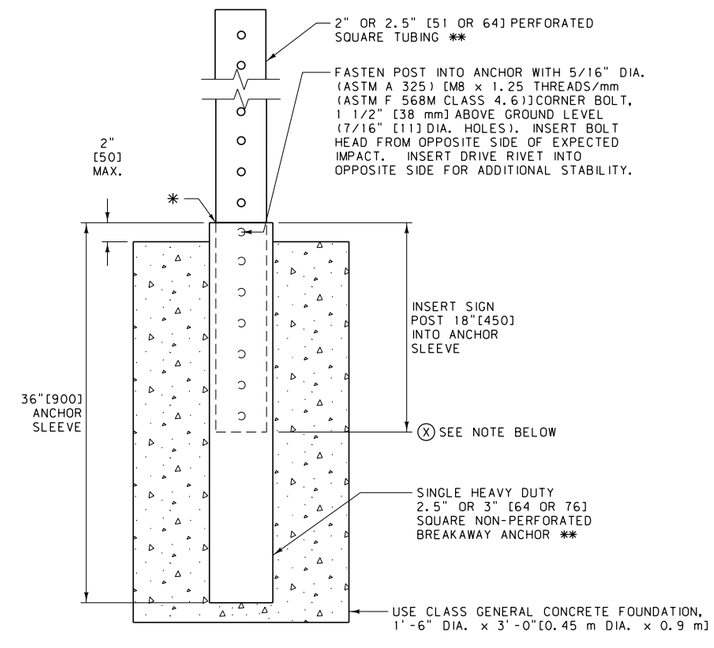

✱ MINIMUM OF 2 SHIMS REQUIRED PER INSTALLATION TO TAKE UP TOLERANCE BETWEEN SUPPORT AND ANCHOR SLEEVE.

✱✱ SUPPORT AND CORRESPONDING ANCHOR					
SUPPORT			ANCHOR		
TUBE SIZE	WEIGHT	WALL THICKNESS	TUBE SIZE	WEIGHT	WALL THICKNESS
2"[51]	2.42 LB./FT. [3.6 kg/m]	0.105" (12 GAUGE) [2.7 (12 GAUGE)]	2.5" [64]	18.36 LB. EA. [8.33 kg EACH]	0.135" (10 GAUGE) [3.4 (10 GAUGE)]
2.5" [64]	3.8 LB./FT. [5.66 kg/m]	0.135" (10 GAUGE) [3.4 (10 GAUGE)]	3" [76]	22.98 LB. EA. [10.43 kg EACH]	0.188" (7 GAUGE) [4.8 (7 GAUGE)]

NOTES:

① BREAKAWAY DEVICES MUST BE LISTED ON THE DEPARTMENT'S QUALIFIED PRODUCTS LIST.

② USE CLASS GENERAL CONCRETE WITH WOOD FLOAT FINISH ON TOP. FORM TOP 6" [150] OF FOUNDATION.

③ GALVANIZE PIPE PER AASHTO M 111.

④ PAINT PIPE WITH ONE SHOP COAT AND ONE FIELD COAT OF ZINC RICH BASED PAINT AND ONE FIELD COAT OF ALUMINUM PAINT, AS SPECIFIED IN THE STANDARD SPECIFICATIONS SECTION 710, ON ALL SURFACES NOT IN CONTACT WITH THE CONCRETE.

⑤ CONFORM STEEL PIPE TO THE REQUIREMENTS OF ASTM A 53 TYPE E OR S, GRADE B.

⑥ SUBMIT SHOP DRAWINGS TO BE APPROVED BY THE MONTANA DEPARTMENT OF TRANSPORTATION BEFORE FABRICATION IS BEGUN.

⑦ STEEL POSTS AND FOOTINGS IN PLACE, INCLUDING ALL CONCRETE, WELDING, EXCAVATION, AND ALL INCIDENTALS ARE INCLUDED IN THE UNIT PRICE BID PER POUND FOR TUBULAR STEEL POSTS.

⑧ USE HARDWARE MEETING THE REQUIREMENTS OF SECTION 704.

Ⓧ BASE POINT OF POST LENGTH MEASUREMENT. TYPE OF POSTS AND FOUNDATIONS, AS WELL AS LENGTHS ARE NOTED IN THE SIGNING QUANTITIES.

UNITS SHOWN IN BRACKETS [] ARE METRIC AND ARE IN MILLIMETERS (mm) UNLESS OTHER UNITS ARE SHOWN.

DETAILED DRAWING	
REFERENCE STANDARD SPEC. SECTION 556, 619, 704, 710	DWG. NO. 619-14
SQUARE TUBULAR SIGN POST BREAKAWAY DEVICES	
EFFECTIVE: SEPTEMBER 2014	

MDT MONTANA DEPARTMENT OF TRANSPORTATION

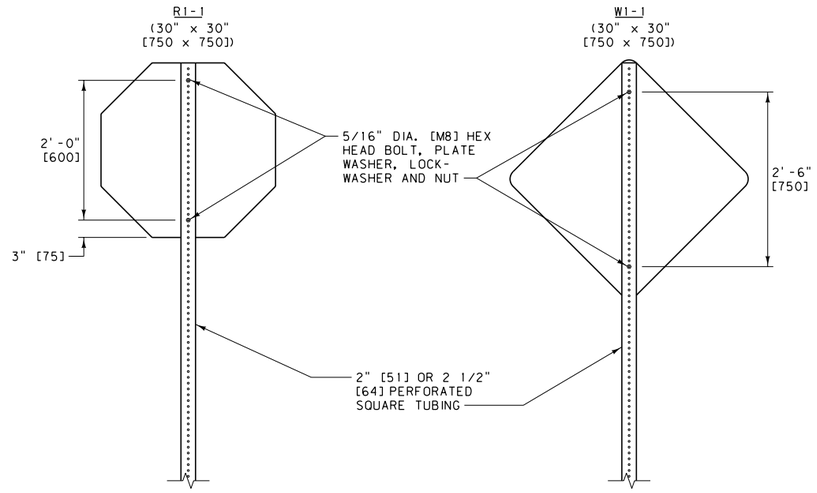

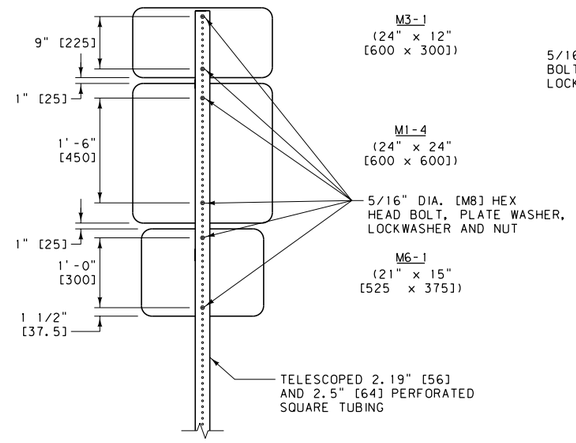

SIGNS WITHOUT BACKBRACING

(SEE PLANS FOR BACKBRACING REQUIREMENTS)

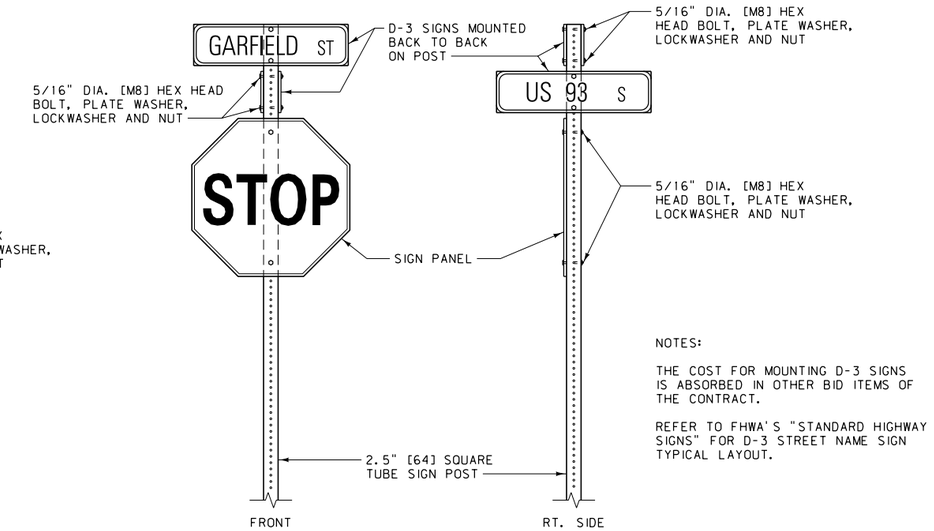

NOTES:

THE COST FOR MOUNTING D-3 SIGNS IS ABSORBED IN OTHER BID ITEMS OF THE CONTRACT.

REFER TO FHWA'S "STANDARD HIGHWAY SIGNS" FOR D-3 STREET NAME SIGN TYPICAL LAYOUT.

STREET NAME SIGN INSTALLATION

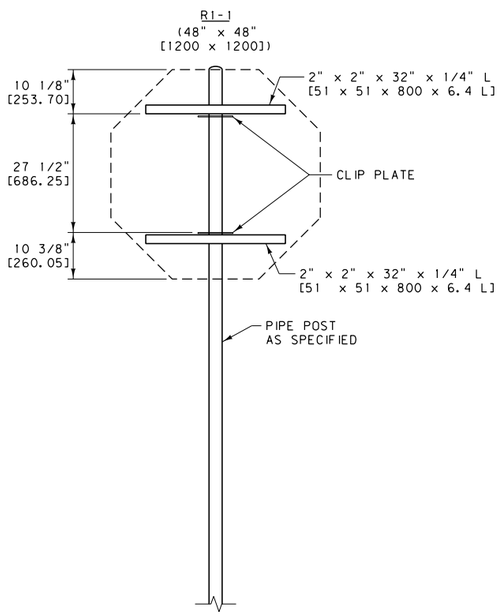

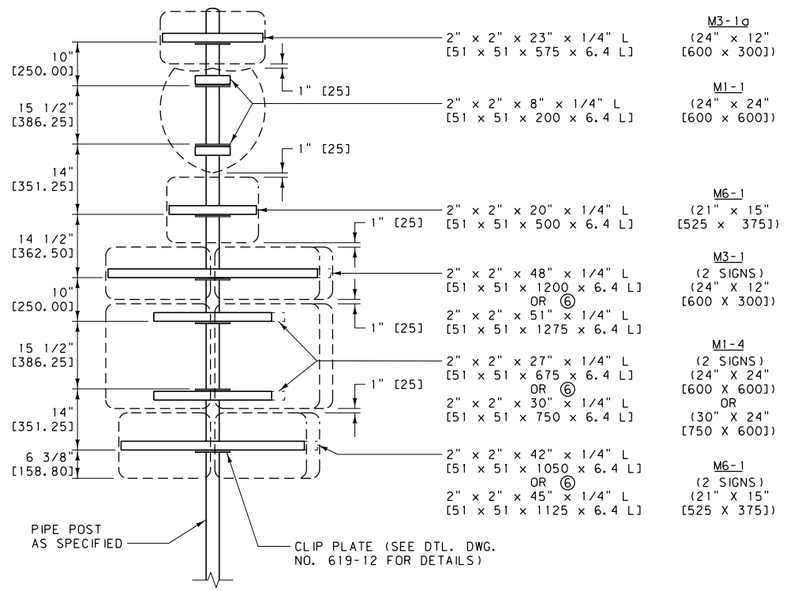

SIGNS WITH BACKBRACING

(SEE PLANS FOR BACKBRACING REQUIREMENTS.
SIGN FACE IS SHOWN IN FRONT OF BACKBRACING.)

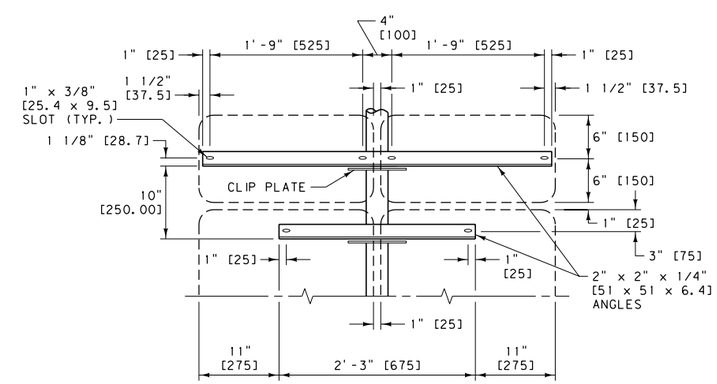

ELEVATION

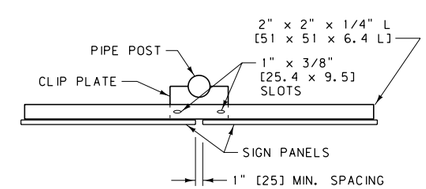

PLAN VIEW

TYPICAL MOUNTING DETAILS

(FOR 3" [75]DIA. AND LARGER PIPE)

NOTES:

① VERTICAL DIMENSIONS SHOWN ARE FROM TOP TO TOP OF ALL POST CLIP PLATES.

② PLACE A SUITABLE WATERTIGHT CAP ON TOP OF ALL PIPE POSTS.

③ CONFORM MATERIAL USED IN FABRICATION OF POST CLIPS AND ANGLE BRACKETS TO SECTION 556.

④ THE LENGTH OF EACH ANGLE BRACKET DEPENDS ON THE MOUNTING ASSEMBLY AND HOLE SPACING OF EACH SIGN. THE ASSEMBLIES SHOWN ARE TYPICAL INSTALLATIONS. ERECT SIMILAR ASSEMBLIES IN A LIKE MANNER.

⑤ REFER TO FHWA'S "STANDARD HIGHWAY SIGNS" FOR STANDARD HOLE SPACING IN SIGNS.

⑥ SEE SIGNING PLANS FOR ROUTE MARKER ASSEMBLY LAYOUT.

⑦ USE HARDWARE MEETING THE REQUIREMENTS OF SECTION 704.

UNITS SHOWN IN BRACKETS [] ARE METRIC AND ARE IN MILLIMETERS (mm) UNLESS OTHER UNITS ARE SHOWN.

DETAILED DRAWING	
REFERENCE STANDARD SPEC. SECTION 556, 619, 704	DWG. NO. 619-16
TYPICAL STEEL POST MOUNTING DETAILS	
EFFECTIVE: SEPTEMBER 2014	
MDT MONTANA DEPARTMENT OF TRANSPORTATION	

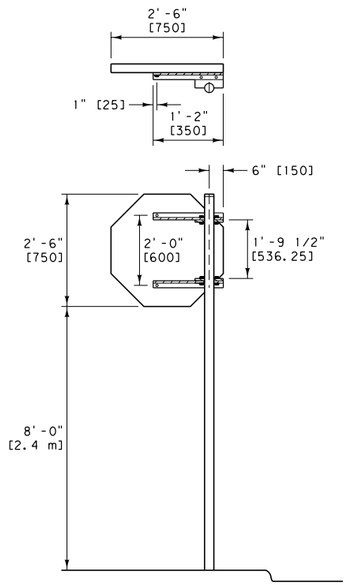

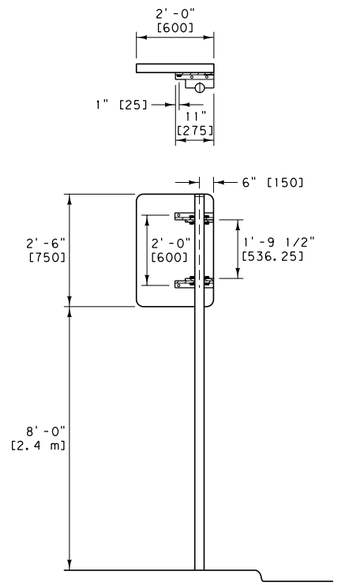

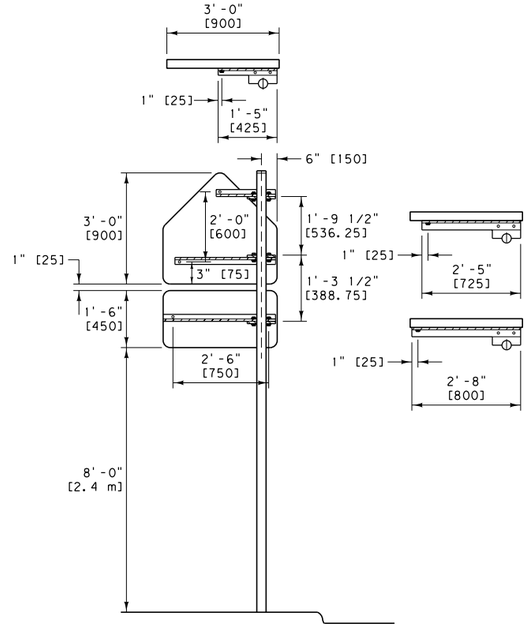

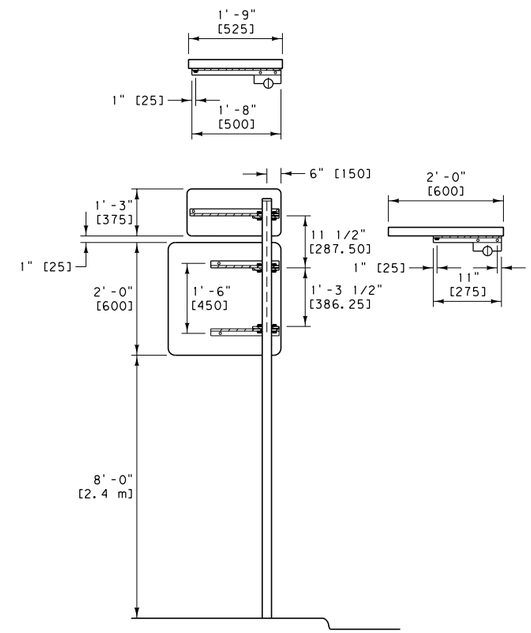

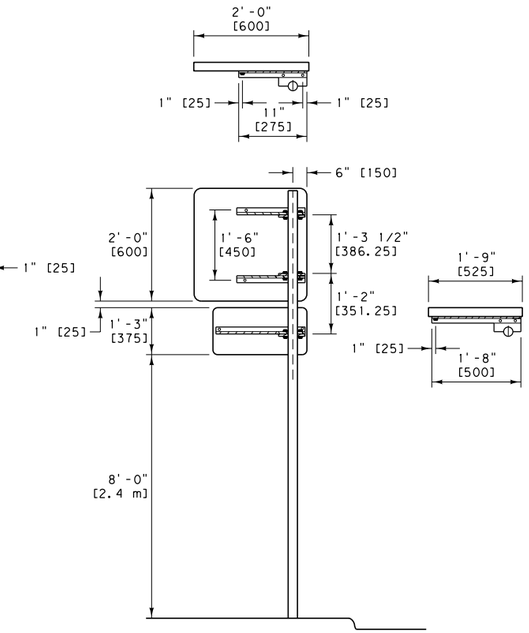

NOTES:

1. REFER TO FHWA'S MANUAL "STANDARD HIGHWAY SIGNS" FOR STANDARD HOLE SPACING IN SIGNS.
2. USE POST CLIPS AS SHOWN IN SIGNING DETAILED DRAWING NO. 619-12 WHEN CANTILEVER MOUNTING IS NECESSARY.
3. USE POSTS ONE SIZE LARGER THAN THOSE REQUIRED FOR STANDARD MOUNTINGS.
4. DIMENSIONS FOR POST CLIP SPACING ARE SHOWN TO THE TOP OF EACH CLIP.
5. ALTERNATE MOUNTING MUST BE APPROVED BY THE PROJECT MANAGER.
6. USE HARDWARE MEETING THE REQUIREMENTS OF SECTION 704.

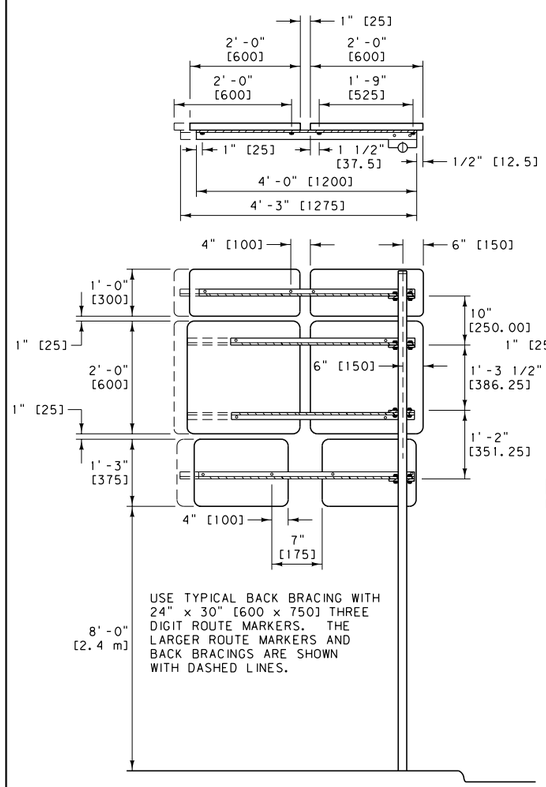

USE TYPICAL BACK BRACING WITH 24" x 30" [600 x 750] THREE DIGIT ROUTE MARKERS. THE LARGER ROUTE MARKERS AND BACK BRACINGS ARE SHOWN WITH DASHED LINES.

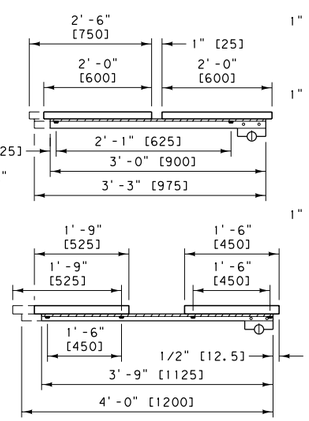

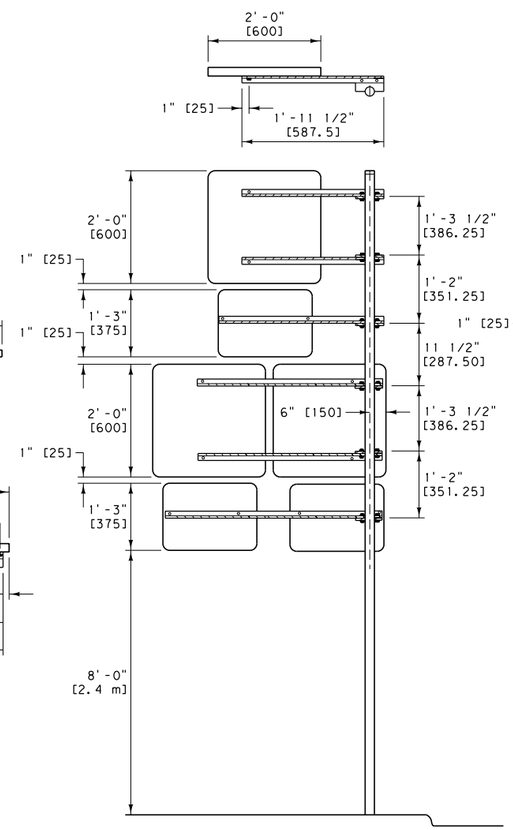

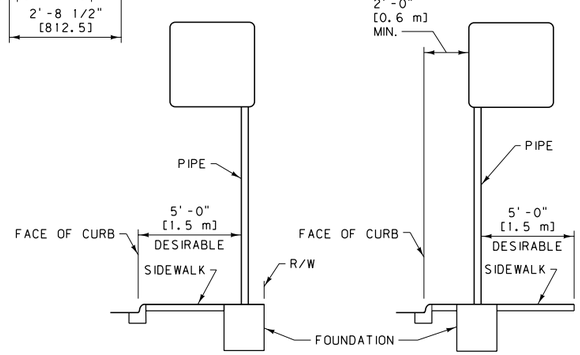

ALTERNATE A

ALTERNATE B

USE THE STANDARD TYPE MOUNTING BEHIND SIDEWALKS IF R/W LIMITS PERMIT. IF R/W DOES NOT PERMIT, THEN ALTERNATE A SHOULD BE USED BEHIND SIDEWALKS OR IN THE SIDEWALK NEXT TO A BUILDING. IF CONDITIONS ARE SUCH THAT THE SIGN CANNOT BE MOUNTED ON THE BACKSIDE OF THE SIDEWALK THEN USE ALTERNATE B.

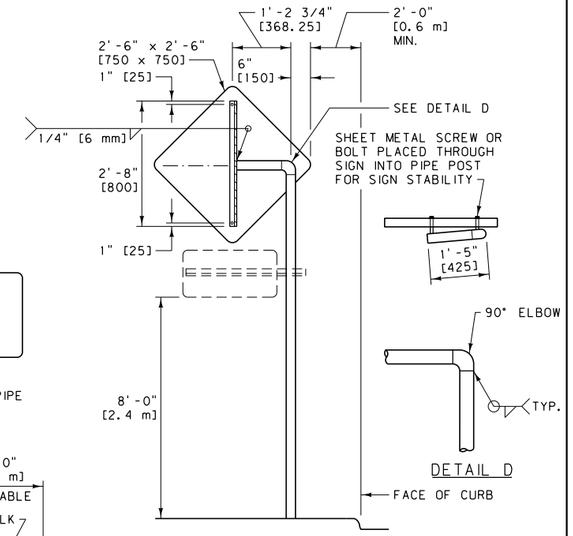

DETAIL D

DETAIL C

UNITS SHOWN IN BRACKETS [ ] ARE METRIC AND ARE IN MILLIMETERS (mm) UNLESS OTHER UNITS ARE SHOWN.

DETAILED DRAWING	
REFERENCE STANDARD SPEC. SECTION 556, 619, 704	DWG. NO. 619-18
CANTILEVER TYPE SIGN SUPPORT DETAILS FOR SIDEWALK AREAS	
EFFECTIVE: SEPTEMBER 2014	

MDT MONTANA DEPARTMENT OF TRANSPORTATION

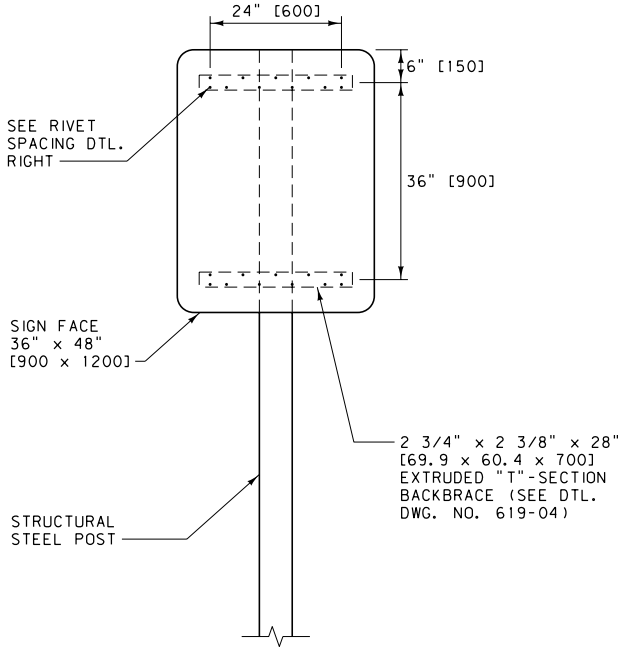

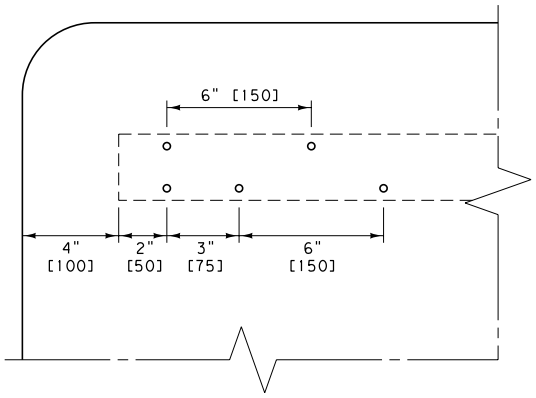

RIVET SPACING

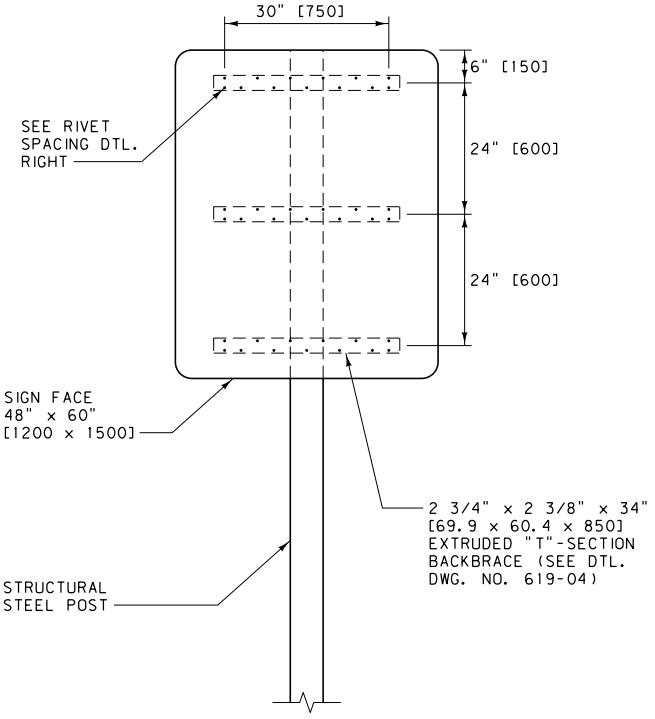

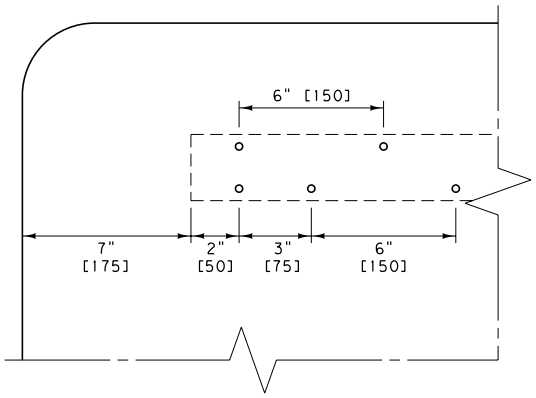

RIVET SPACING

UNITS SHOWN IN BRACKETS [] ARE METRIC AND ARE IN MILLIMETERS (mm) UNLESS OTHER UNITS ARE SHOWN.

NOTES:

1. SEE THE PLANS FOR BACKBRACING REQUIREMENTS.
2. USE HARDWARE MEETING THE REQUIREMENTS OF SECTION 704.

DETAILED DRAWING	
REFERENCE STANDARD SPEC. SECTION 619, 704	DWG. NO. 619-19
STRUCTURAL STEEL POST SIGN MOUNTING DETAILS	
EFFECTIVE: SEPTEMBER 2014	
MDT MONTANA DEPARTMENT OF TRANSPORTATION	

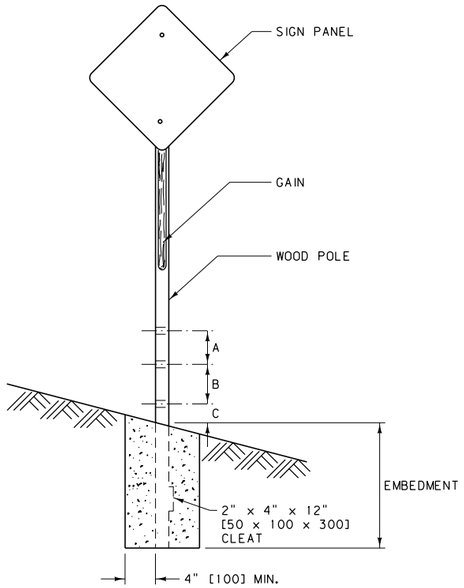

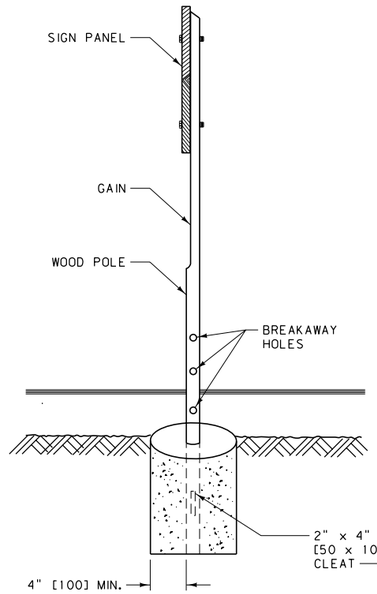

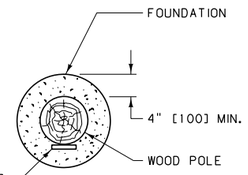

BREAKAWAY AND FOOTING DETAILS

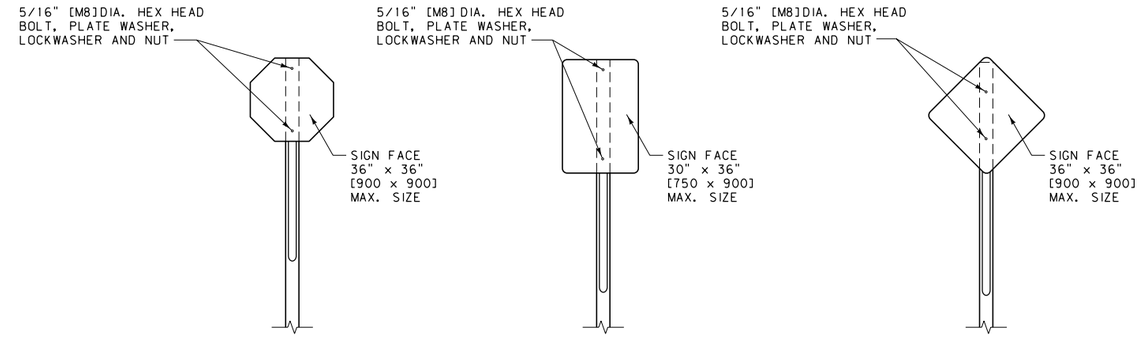

REGULATORY SIGNS

WARNING SIGNS

TYPICAL SIGN MOUNTINGS

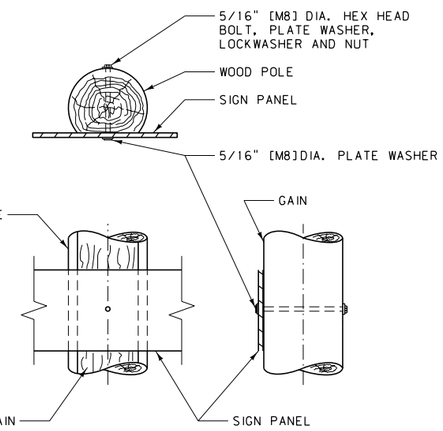

SIGN MOUNTING DETAIL

NOTES:

① CONFORM ALL WOOD POLES TO THE REQUIREMENTS OF SECTION 704.

② GAIN ALL POLES ON THE SIGN SIDE THE MINIMUM WIDTH SHOWN IN THE TABLE, FOR HALF THE LENGTH OF EACH POLE.

③ BREAKAWAY DETAILS ARE STANDARD FOR ALL WOOD POLES LISTED IN THE TABLE, ON SINGLE AND MULTIPLE SIGN SUPPORTS.

④ USE HARDWARE MEETING THE REQUIREMENTS OF SECTION 704.

⑤ ATTACH A 2" x 4" x 12" [50 x 100 x 300]BOARD 12" [300]FROM THE BOTTOM OF THE POLE TO PREVENT SPINNING. ATTACH THIS CLEAT BY DRIVING TWO 16d NAILS THROUGH THE CLEAT AND INTO THE POLE. TREAT THE 2" x 4" [50 x 100]CLEAT.

⑥ THE MAXIMUM CROSS-SECTIONAL AREA AT A POINT 4" [100]ABOVE GROUND LEVEL MAY NOT EXCEED 24 SQUARE INCHES [15 480 mm²]EXCLUSIVE OF DRILLED BREAKAWAY HOLES FOR UNPROTECTED POST INSTALLATIONS. THE HOLE DIAMETER MAY BE ENLARGED IF NECESSARY TO ENSURE THIS REQUIREMENT IS MET.

⑦ USE SOIL CEMENT FOR THE FOUNDATION - PER SECTION 619.

⑧ FOR SIGNS REQUIRING BACKBRACING, CONSULT DTL. DWG. NO. 619-21 AND 619-22 FOR BACKBRACING OPTIONS AND DETAILS.

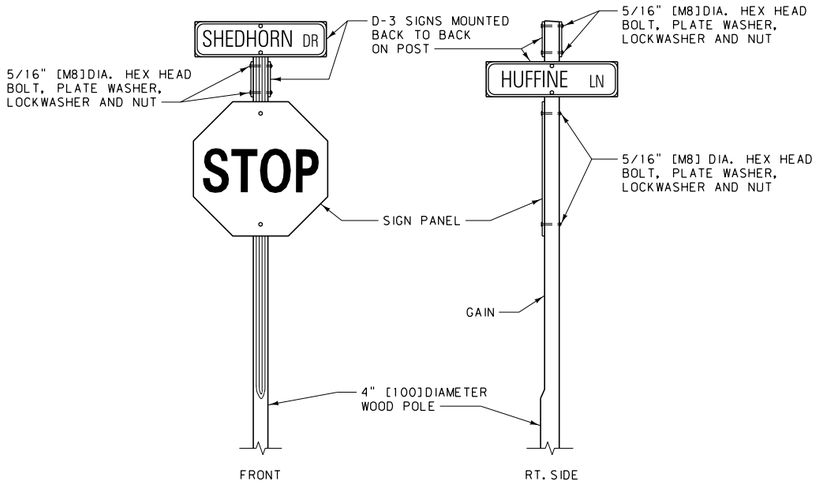

NOTES:

THE COST FOR MOUNTING D-3 SIGNS IS ABSORBED IN OTHER BID ITEMS OF THE CONTRACT.

REFER TO FHWA'S "STANDARD HIGHWAY SIGNS" FOR D-3 STREET NAME SIGN TYPICAL LAYOUT.

STREET NAME SIGN INSTALLATION

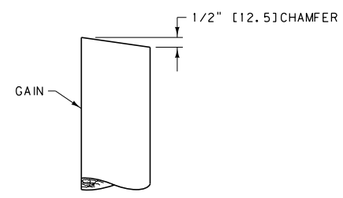

TOP END TREATMENT

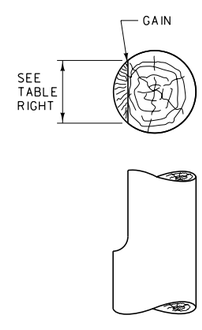

GAIN DETAIL

SIGN MOUNTING DIMENSIONS							
	POLE SIZE	A	B	C	HOLE DIA. (SEE NOTE ⑥)	EMBEDMENT	GAIN
	3" TOP DIA.	~	~	~	~	3'-0"	2 3/4"
	4" TOP DIA.	~	~	~	~	3'-0"	3 1/2"
	5" TOP DIA.	~	12"	4"	2"	3'-6"	4"
MUST BE PROTECTED OR OUT OF CLEAR ZONE	6" TOP DIA.	~	12"	4"	2 1/2"	4'-6"	4"
	CLASS 4	~	12"	4"	2"	5'-0"	4"
	CLASS 3	~	12"	4"	2 1/2"	5'-6"	4"
	CLASS 2	6"	6"	4"	2"	6'-0"	4"
	CLASS 1	6"	6"	4"	2 1/2"	6'-6"	4"

METRIC SIGN MOUNTING DIMENSIONS							
	POLE SIZE (mm)	A (mm)	B (mm)	C (mm)	HOLE DIA. (SEE NOTE ⑥) (mm)	EMBEDMENT	GAIN (mm)
	75 TOP DIA.	~	~	~	~	0.9 m	70
	100 TOP DIA.	~	~	~	~	0.9 m	90
	130 TOP DIA.	~	300	100	51	1.1 m	100
MUST BE PROTECTED OR OUT OF CLEAR ZONE	150 TOP DIA.	~	300	100	64	1.4 m	100
	CLASS 4	~	300	100	51	1.5 m	100
	CLASS 3	~	300	100	64	1.7 m	100
	CLASS 2	150	150	100	51	1.8 m	100
	CLASS 1	150	150	100	64	2.0 m	100

UNITS SHOWN IN BRACKETS [] ARE METRIC AND ARE IN MILLIMETERS (mm) UNLESS OTHER UNITS ARE SHOWN.

DETAILED DRAWING

REFERENCE STANDARD SPEC. SECTION 619, 704

DWG. NO. 619-20

TREATED WOOD POLE SIGN MOUNTING AND SUPPORT DETAILS

EFFECTIVE: SEPTEMBER 2014

MDT MONTANA DEPARTMENT OF TRANSPORTATION

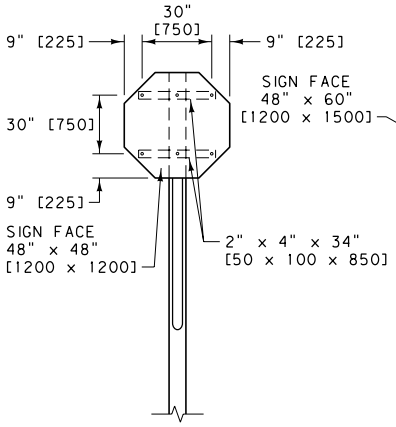

REGULATORY SIGNS

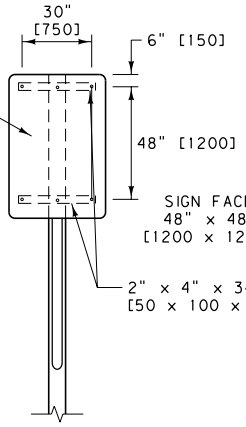

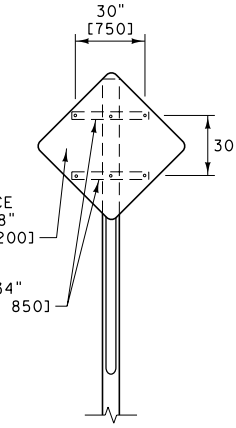

WARNING SIGNS

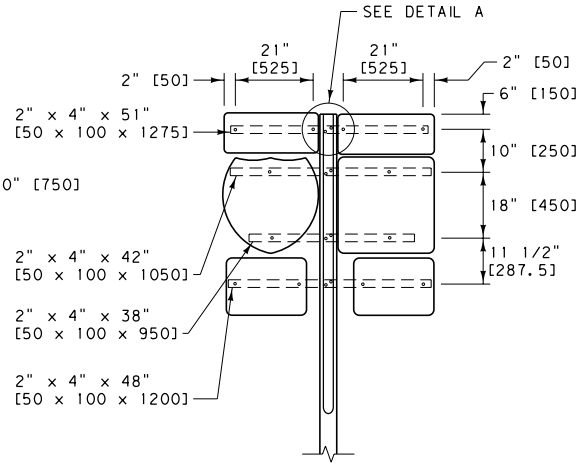

ROUTE MARKER ASSEMBLY

NOTE:

① SIGNS OF THESE SIZES AND LARGER REQUIRE WOOD BACKBRACING.

② SMALLER SIGNS MAY REQUIRE BACKBRACING IF THE CONDITIONS WARRANT (SEE SIGNING PLANS). IN THIS CASE, THE CONTRACTOR HAS THE OPTION OF USING WOOD OR STEEL BACKBRACING (SEE DTL. DWG. NO. 619-22).

WOOD BACKBRACE INSTALLATIONS

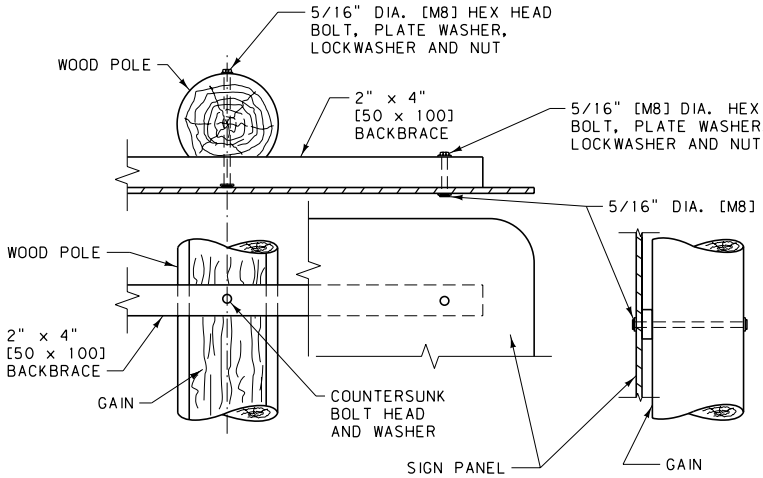

SIGN MOUNTING DETAIL

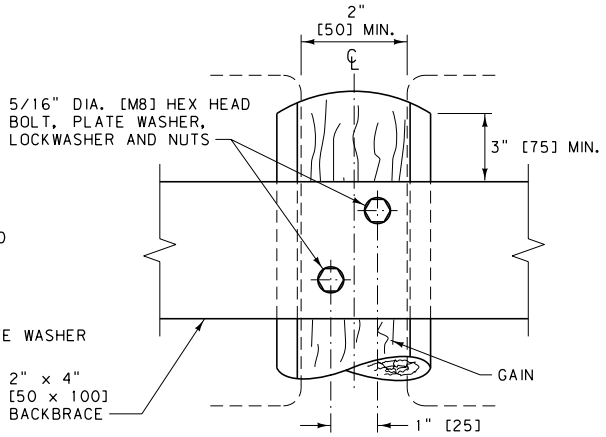

DETAIL A

(BACKBRACE)

NOTES:

① CONFORM ALL WOOD POLES TO THE REQUIREMENTS OF SECTION 704.

② GAIN ALL POLES ON THE SIGN SIDE THE MINIMUM WIDTH SHOWN IN THE TABLE ON DTL. DWG. NO. 619-20, FOR HALF THE LENGTH OF EACH POLE.

③ USE TREATED 2" x 4" [50 x 100]S4S LUMBER FOR ALL WOOD BACKBRACING, CONFORMING TO THE REQUIREMENTS OF SECTION 704.

④ USE HARDWARE MEETING THE REQUIREMENTS OF SECTION 704.

⑤ SEE DTL. DWG. NO. 619-20 FOR BREAKAWAY AND SUPPORT DETAILS.

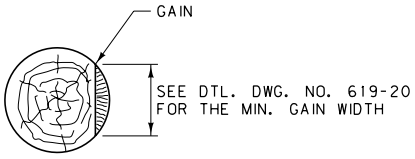

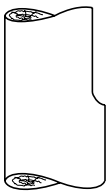

GAIN DETAIL

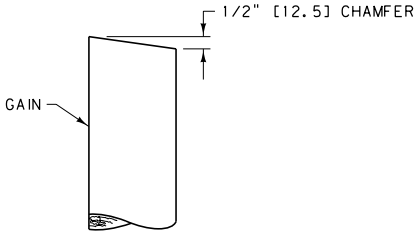

TOP END TREATMENT

UNITS SHOWN IN BRACKETS [] ARE METRIC AND ARE IN MILLIMETERS (mm) UNLESS OTHER UNITS ARE SHOWN.

DETAILED DRAWING	
REFERENCE STANDARD SPEC. SECTION 619, 704	DWG. NO. 619-21
TREATED WOOD POLE SIGN MOUNTING DETAILS	
EFFECTIVE: SEPTEMBER 2014	

MDT MONTANA DEPARTMENT OF TRANSPORTATION

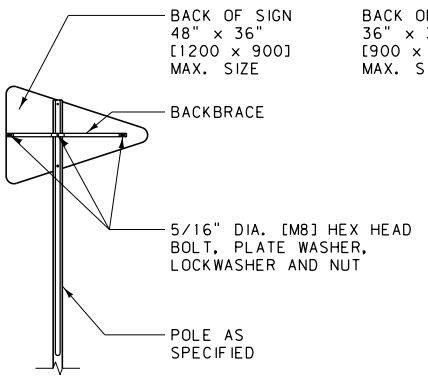

NO PASSING PENNANTS

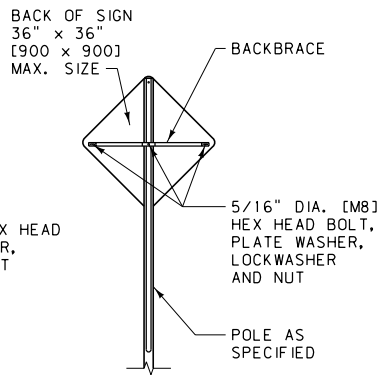

WARNING SIGNS

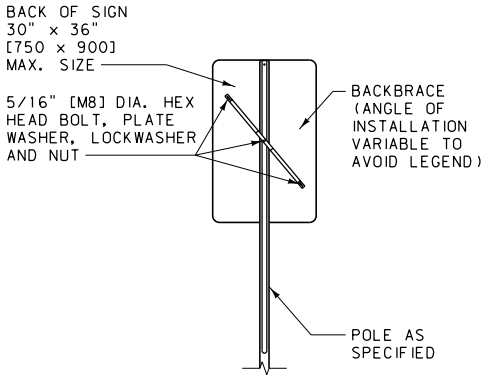

REGULATORY SIGNS

STEEL BACKBRACE INSTALLATIONS

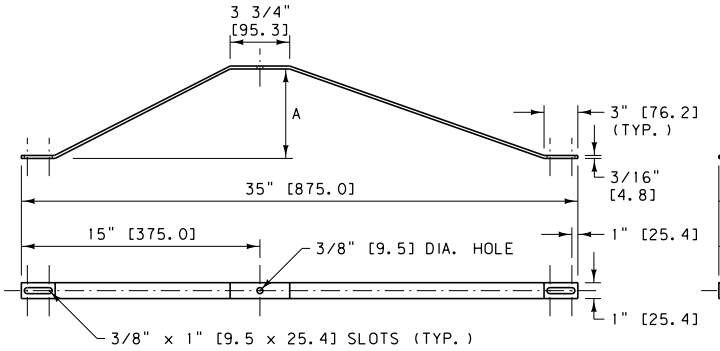

NO PASSING PENNANTS

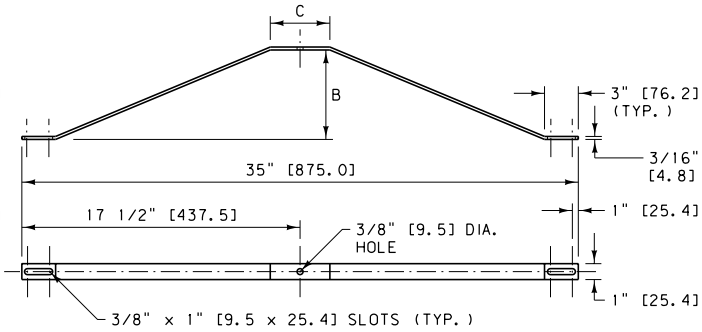

REGULATORY AND WARNING SIGNS

POLE DIA.	A	B	C
3" [75]	2 1/8" [54.0]	2 1/8" [54.0]	3 3/4" [95.3]
4" [100]	3" [76.2]	3" [76.2]	3 3/4" [95.3]
5" [130]	~	4" [101.6]	4 1/4" [108.0]
6" [150]	~	5 1/4" [133.4]	4 1/4" [108.0]

STEEL BACKBRACE DETAILS

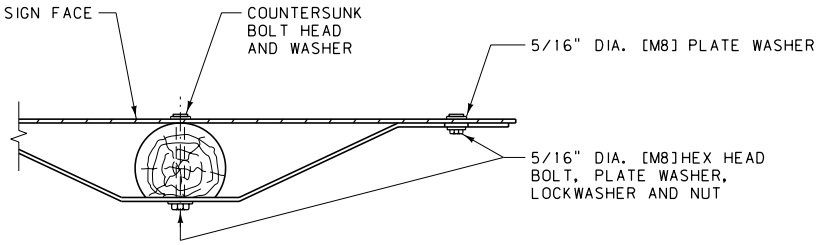

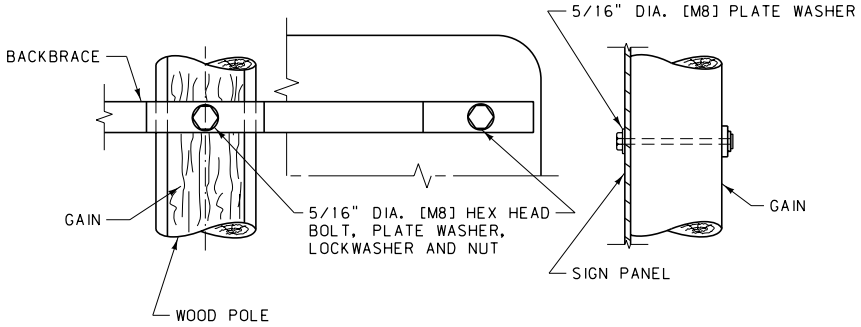

SIGN MOUNTING DETAIL

NOTES:

1. USE COMMERCIAL QUALITY, MILD STEEL, THAT IS HOT-DIPPED AFTER FABRICATION. GALVANIZE IN ACCORDANCE WITH SUBSECTION 711.08.
2. SEE DTL. DWG. NO. 619-20 FOR ADDITIONAL SIGN MOUNTING REQUIREMENTS. MOUNT SIGN FACE TO POLE BEFORE INSTALLING BACKBRACING.
3. SEE DTL. DWG. NO. 619-20 FOR BREAKAWAY AND SUPPORT DETAILS.
4. USE HARDWARE MEETING THE REQUIREMENTS OF SECTION 704.

UNITS SHOWN IN BRACKETS [] ARE METRIC AND ARE IN MILLIMETERS (mm) UNLESS OTHER UNITS ARE SHOWN.

DETAILED DRAWING

REFERENCE STANDARD SPEC. SECTION 619, 704, 711

DWG. NO. 619-22

TREATED WOOD POLE
OPTIONAL BACKBRACE

EFFECTIVE: SEPTEMBER 2014

MDT MONTANA DEPARTMENT OF TRANSPORTATION

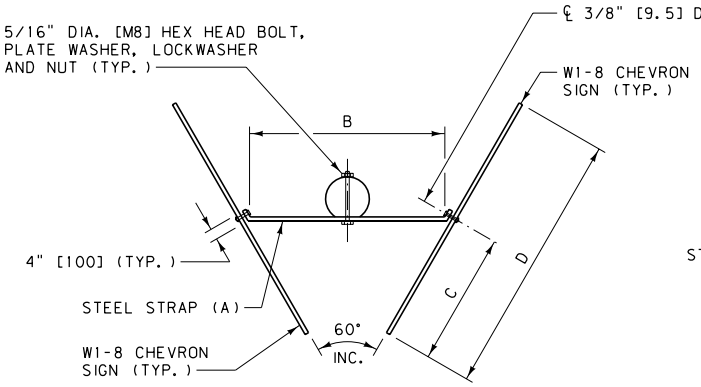

PLAN VIEW

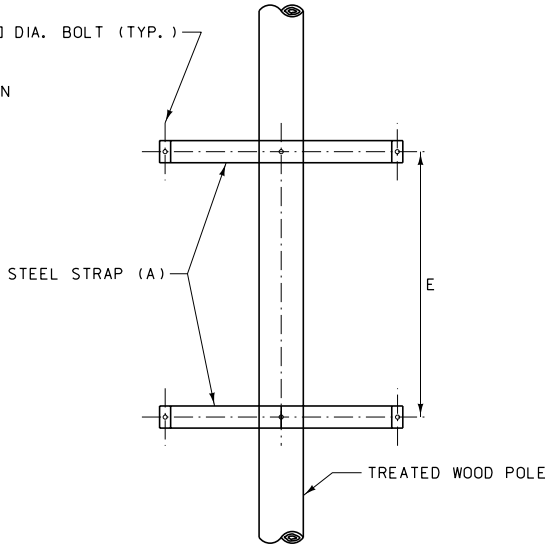

ELEVATION

SIGN SIZE	DIMENSIONS				
	A	B	C	D	E
18" x 24"	1/4" x 2" x 1'-11"	15"	9"	18"	18"
24" x 30"	1/4" x 2" x 2'-2"	18"	12"	24"	24"
30" x 36"	1/4" x 2" x 2'-5"	21"	15"	30"	30"
36" x 48"	1/4" x 2" x 2'-8"	24"	18"	36"	36"

SIGN SIZE (mm)	METRIC DIMENSIONS (mm)				
	A	B	C	D	E
450 x 600	6 x 50 x 580	380	225	450	450
600 x 750	6 x 50 x 655	455	300	600	600
750 x 900	6 x 50 x 735	535	375	750	750
900 x 1200	6 x 50 x 810	610	450	900	900

WOOD POST MOUNTING

MOUNT 2 CHEVRON SIGNS ON EACH POST WITH EACH PANEL ADJUSTED TO APPROXIMATE RIGHT ANGLE TO ROADWAY CENTERLINE. EXACT LOCATION AND ANGLE TO BE DETERMINED BY THE PROJECT MANAGER.

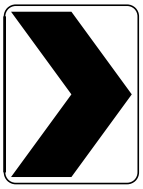

W1-8 CHEVRON ALIGNMENT SIGNS MAY BE USED AS AN ALTERNATE OR AS A SUPPLEMENT TO DELINEATION TO PROVIDE ADDITIONAL EMPHASIS AND GUIDANCE WHEN A CHANGE IN HORIZONTAL ALIGNMENT EXISTS IN THE ROADWAY.

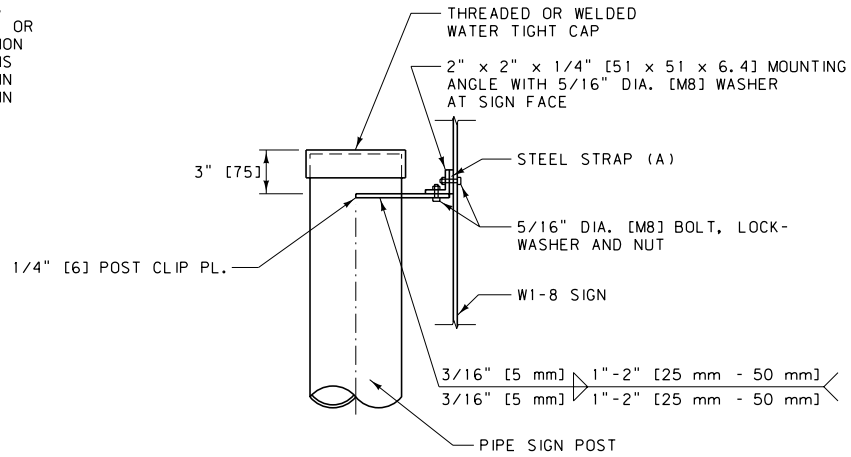

STEEL PIPE MOUNTING

NOTES:

1. INSTALL CHEVRONS WITH A MINIMUM 10'-0" [3.1 m] HORIZONTAL CLEARANCE AND A 5'-0" [1.5 m] VERTICAL MOUNTING HEIGHT.
2. SPACING FOR DESIGN PURPOSES IS DOUBLE THE SPACING SHOWN IN THE TABLE ON DTL. DWG. NO. 619-36, UP TO A MAXIMUM CHEVRON SPACING OF 200' [60 m]. A MINIMUM OF 3 VISIBLE CHEVRONS ARE REQUIRED THROUGH A CURVE.
3. FIELD INSPECT THE CHEVRONS AT NIGHT AND ADJUST THEIR LOCATIONS TO ACHIEVE 500' [150 m] OF VISIBILITY.
4. USE HARDWARE MEETING THE REQUIREMENTS OF SECTION 704.

UNITS SHOWN IN BRACKETS [] ARE METRIC AND ARE IN MILLIMETERS (mm) UNLESS OTHER UNITS ARE SHOWN.

DETAILED DRAWING	
REFERENCE STANDARD SPEC. SECTION 619, 704	DWG. NO. 619-24
CHEVRON MOUNTING DETAILS	
EFFECTIVE: SEPTEMBER 2014	

MDT MONTANA DEPARTMENT OF TRANSPORTATION

PANELS

FOR USE ON ROUTE MARKER ASSEMBLIES

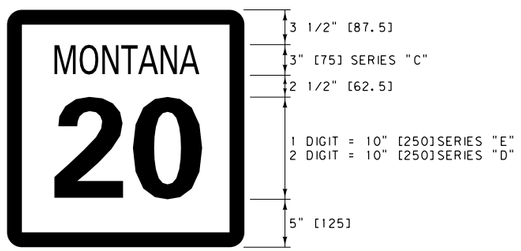

M1-5

24" x 24" [600 x 600]

MARGIN = NONE

BORDER = 1 1/2" [37.5]

CORNER RADIUS = 1 1/2" [37.5]

BLACK LEGEND AND BORDER ON A RETRO-REFLECTORIZED WHITE BACKGROUND.

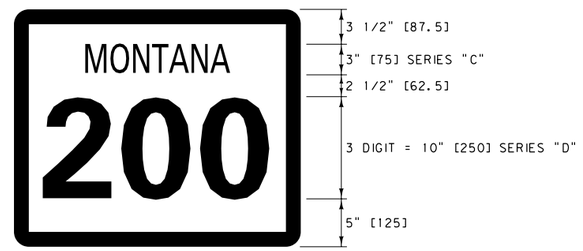

M1-5

30" x 24" [750 x 600]

MARGIN = NONE

BORDER = 1 1/2" [37.5]

CORNER RADIUS = 1 1/2" [37.5]

BLACK LEGEND AND BORDER ON A RETRO-REFLECTORIZED WHITE BACKGROUND.

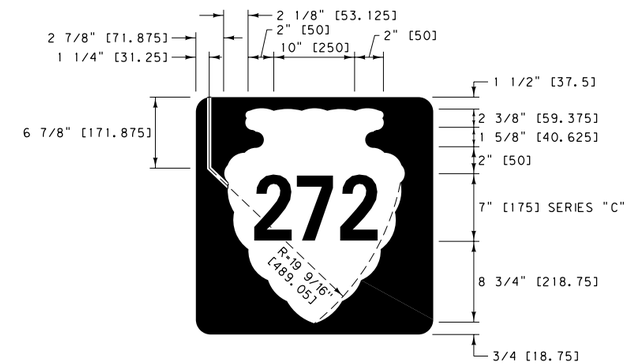

M1-10

24" x 24" [600 x 600]

MARGIN = NONE

BORDER = SEE DESIGN ABOVE

CORNER RADIUS = 1 1/2" [37.5]

BLACK LEGEND AND BORDER ON A RETRO-REFLECTORIZED WHITE BACKGROUND.

SHIELDS

FOR USE ON GUIDE SIGNS

SERIES "D" NUMERALS

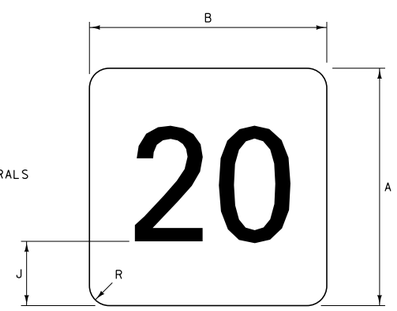

SERIES "C" NUMERALS

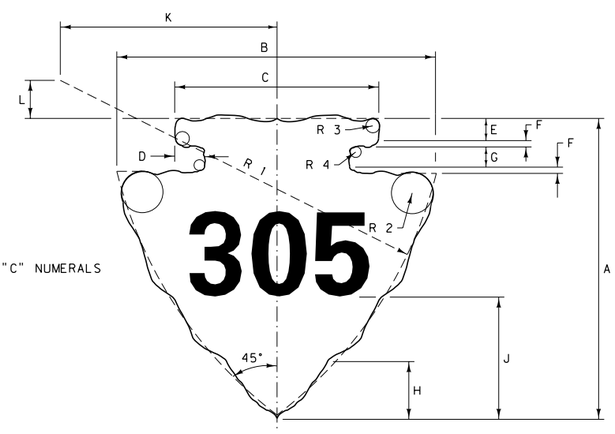

NOTES:

1. CENTER ALL NUMERALS USED ON PANELS AND SHIELDS OPTICALLY ABOUT VERTICAL CENTERLINE.
2. SEE SIGNS AND SIGNING MATERIALS CATALOG FOR COMPLETE LISTING OF SIGNS AND SIGN SIZES. DESIGNS ARE AVAILABLE FROM THE TRAFFIC ENGINEERING SIGNING UNIT FOR SIGNS UNIQUE TO MONTANA.
3. USE HARDWARE MEETING THE REQUIREMENTS OF SECTION 704.

	SIGN DIMENSIONS					
	10" NUMERALS		12" NUMERALS		18" NUMERALS	
	2 DIGIT	3 DIGIT	2 DIGIT	3 DIGIT	2 DIGIT	3 DIGIT
A	21"	21"	24"	24"	36"	36"
B	24"	30"	24"	30"	36"	45"
J	6"	6"	6 1/2"	6 1/2"	9 1/2"	9 1/2"
R	1 1/2"	1 1/2"	2"	2"	2 1/2"	2 1/2"
	METRIC SIGN DIMENSIONS (mm)					
	250 mm NUMERALS		300 mm NUMERALS		450 mm NUMERALS	
	2 DIGIT	3 DIGIT	2 DIGIT	3 DIGIT	2 DIGIT	3 DIGIT
A	525	525	600	600	900	900
B	600	750	600	750	900	1125
J	150	150	162.5	162.5	237.5	237.5
R	37.5	37.5	50	50	62.5	62.5

BLACK LEGEND ON A RETRO-REFLECTORIZED WHITE BACKGROUND WITH NO BORDER.

		SIGN DIMENSIONS											RADII			
		A	B	C	D	E	F	G	H	J	K	L	R 1	R 2	R 3	R 4
*	8" NUMERALS	26"	28"	18 1/2"	2 5/8"	3"	5/16"	2"	5 1/2"	11"	17"	2 1/4"	32"	1 3/4"	5/8"	5/16"
**	10" NUMERALS	32"	34"	22 1/2"	3 1/4"	3 5/8"	3/8"	2 1/2"	6 3/4"	13 3/4"	20 1/2"	2"	38 1/2"	2"	3/4"	3/8"
***	12" NUMERALS	40"	42"	28"	4"	4 1/2"	1/2"	3"	8 7/16"	17"	25"	2 7/8"	48"	2 1/2"	1"	1/2"
		METRIC SIGN DIMENSIONS (mm)											METRIC RADII (mm)			
		A	B	C	D	E	F	G	H	J	K	L	R 1	R 2	R 3	R 4
*	200 mm NUMERALS	650	700	462.5	65.625	75	7.8	50	137.5	275	425	56.25	800	43.75	15.625	7.8
**	250 mm NUMERALS	800	850	562.5	81.25	90.625	9.375	62.5	168.75	343.75	512.5	50	962.5	50	18.75	9.375
***	300 mm NUMERALS	1000	1050	700	100	112.5	12.5	75	210.9	425	625	71.875	1200	62.5	25	12.5

BLACK LEGEND ON A RETRO-REFLECTORIZED WHITE BACKGROUND.

* USE WITH STANDARD 24" [600] U.S. SHIELD.

** USE WITH STANDARD 30" [750] AND 36" [900] U.S. SHIELD.

*** USE WITH STANDARD 42" [1050] U.S. SHIELD AND ALL INDEPENDENT USE.

UNITS SHOWN IN BRACKETS [] ARE METRIC AND ARE IN MILLIMETERS (mm) UNLESS OTHER UNITS ARE SHOWN.

DETAILED DRAWING

REFERENCE STANDARD SPEC. SECTION 619, 704

DWG. NO. 619-26

SPECIAL DESIGN ROUTE MARKER PANELS AND SHIELDS

EFFECTIVE: SEPTEMBER 2014

MDT MONTANA DEPARTMENT OF TRANSPORTATION

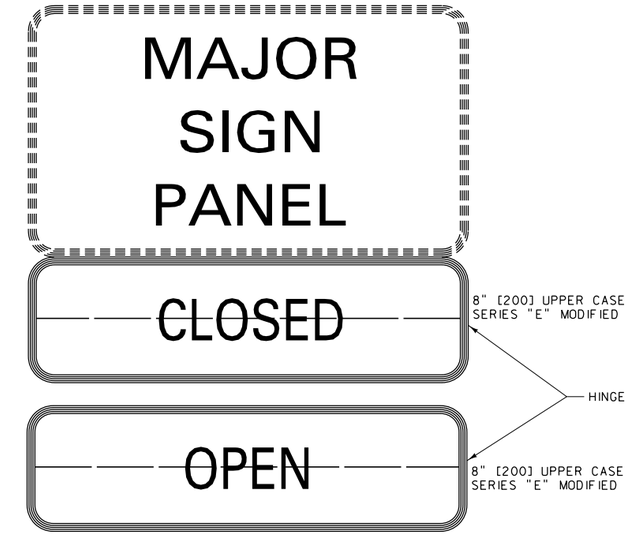

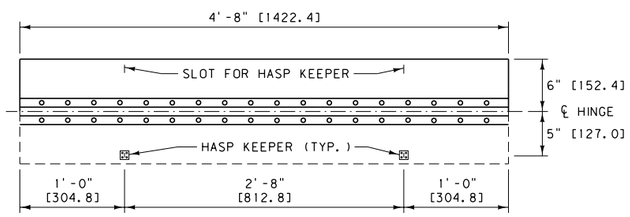

HINGE DETAIL
EXAMPLE

(5'-6" x 4'-0" [1650 x 1200] D8-2A WEIGH STATION SIGN SHOWN)

ALUMINUM SHEET MOUNTING

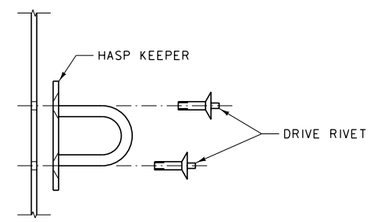

PLYWOOD MOUNTING

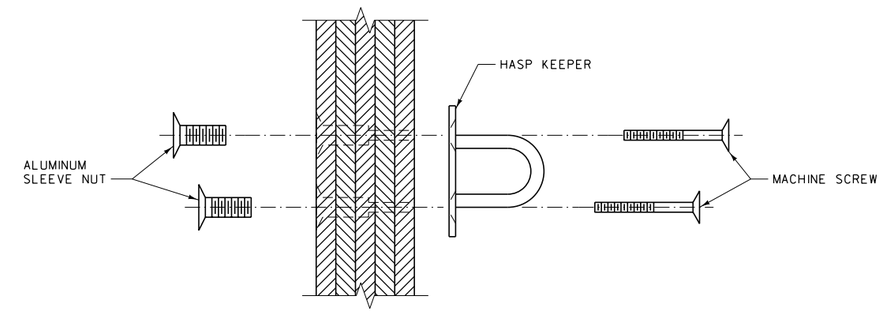

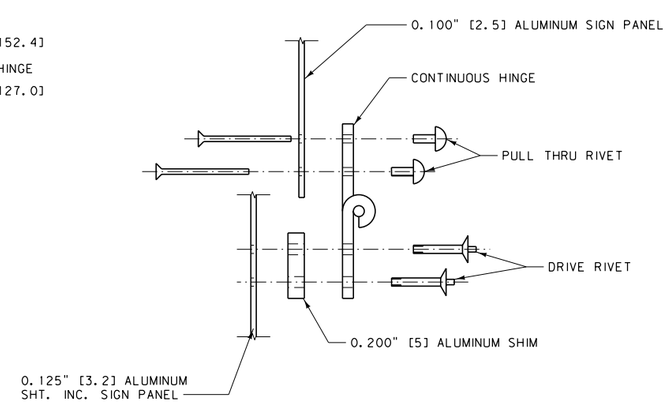

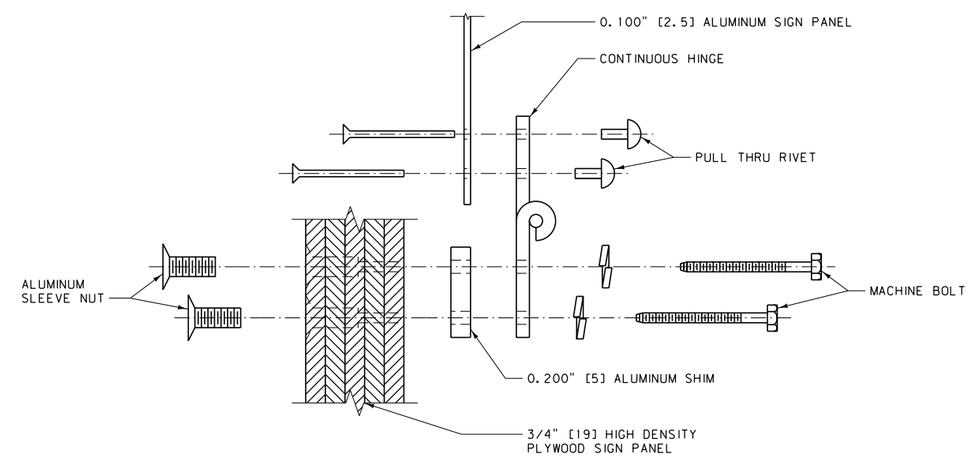

NOTES:

1. SEE SIGNS AND SIGNING MATERIALS CATALOG FOR COMPLETE LISTING OF SIGNS AND SIGN SIZES. DESIGNS ARE AVAILABLE FROM THE TRAFFIC ENGINEERING SIGNING UNIT FOR SIGNS UNIQUE TO MONTANA.
2. THE SIGN PANEL CONSISTS OF 3/4" [19]HIGH DENSITY PLYWOOD OR 0.125" [3.2] ALUMINUM SHEET INCREMENT AS SPECIFIED ON THE PLANS. THE HINGED PANEL CONSISTS OF 0.100" [2.5]SHEET ALUMINUM.
3. PAINT ALL HARDWARE VISIBLE ON THE SIGN FACE OR COVER WITH RETRO-REFLECTIVE SHEETING, THE SAME COLOR AS THE SIGN.
4. SUBMIT SHOP DRAWINGS FOR APPROVAL PRIOR TO FABRICATION.
5. SUPPLEMENTAL SIGN PANEL BELOW MAJOR SIGN PANEL MUST HAVE RETRO-REFLECTORIZED LEGEND AND BACKGROUND MATCHING COLORS OF MAJOR PANEL.
6. THE MINIMUM MOUNTING HEIGHT TO THE BOTTOM OF THE SECONDARY PANEL IS 5'-0" [1.5 m].
7. USE HARDWARE MEETING THE REQUIREMENTS OF SECTION 704.

UNITS SHOWN IN BRACKETS [] ARE METRIC AND ARE IN MILLIMETERS (mm) UNLESS OTHER UNITS ARE SHOWN.

DETAILED DRAWING	
REFERENCE STANDARD SPEC. SECTION 619, 704	DWG. NO. 619-30
SIGN HINGE DETAILS	
EFFECTIVE: SEPTEMBER 2014	
MDT MONTANA DEPARTMENT OF TRANSPORTATION	

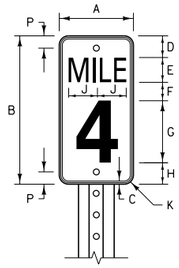

D10-1 AND D10-4

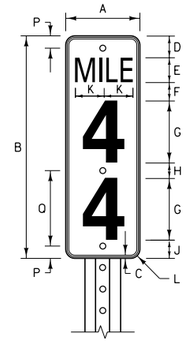

D10-2 AND D10-5

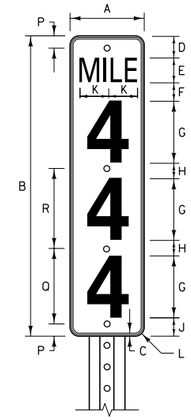

D10-3 AND D10-6

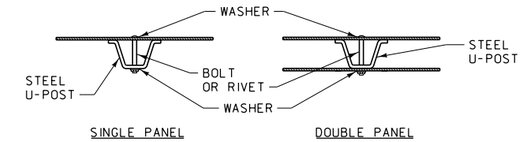

TYPICAL PANEL MOUNTING

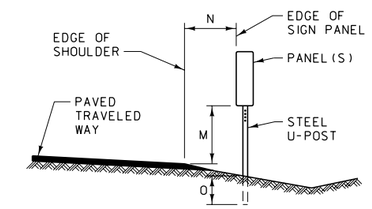

PLACEMENT DIMENSIONS		
DIMENSION	INTERSTATE	NON-INTERSTATE
M	4'	4'
N	6'	2' TO 6' ✱
O	3' MIN.	3' MIN.
METRIC PLACEMENT DIMENSIONS		
DIMENSION	INTERSTATE	NON-INTERSTATE
M	1.2 m	1.2 m
N	1.8 m	0.6 m TO 1.8 m ✱
O	0.9 m MIN.	0.9 m MIN.

✱ NORMALLY IN LINE WITH DELINEATORS

TYPICAL PLACEMENT

PANEL DIMENSION INFORMATION

INTERSTATE			
DIMENSION	D10-4 (1 DIGIT)	D10-5 (2 DIGIT)	D10-6 (3 DIGIT)
A	12.0"	12.0"	12.0"
B	24.0"	36.0"	48.0"
C	0.5"	0.5"	0.5"
D	3.5"	3.0"	3.0"
E	4.0" SERIES "D"	4.0" SERIES "D"	4.0" SERIES "D"
F	3.0"	3.0"	3.0"
G ⊛	10.0" SERIES "D"	10.0" SERIES "D"	10.0" SERIES "D"
H	3.5"	3.0"	2.5"
J	4.0"	3.0"	3.0"
K	1.5"	4.0"	4.0"
L	~	1.5"	1.5"
P	2.0"	2.0"	2.0"
Q	~	12.5"	12.5"
R	~	~	12.5"

NON-INTERSTATE			
DIMENSION	D10-1 (1 DIGIT)	D10-2 (2 DIGIT)	D10-3 (3 DIGIT)
A	10.0"	10.0"	10.0"
B	18.0"	27.0"	36.0"
C	0.5"	0.5"	0.5"
D	3.0"	3.0"	3.0"
E	4.0" SERIES "D"	4.0" SERIES "D"	4.0" SERIES "D"
F	2.0"	2.0"	2.0"
G ⊛	6.0" SERIES "D"	6.0" SERIES "D"	6.0" SERIES "D"
H	3.0"	3.0"	3.0"
J	4.0"	3.0"	3.0"
K	1.5"	4.0"	4.0"
L	~	1.5"	1.5"
P	1.5"	1.5"	1.5"
Q	~	9.0"	9.0"
R	~	~	9.0"

⊛ OPTICALLY CENTER DIGITS ON VERTICAL ℄ OF PANEL.

METRIC PANEL DIMENSION INFORMATION

INTERSTATE #			
DIMENSION	D10-4 (1 DIGIT)	D10-5 (2 DIGIT)	D10-6 (3 DIGIT)
A	300	300	300
B	600	900	1200
C	10	10	10
D	88	75	75
E	100 SERIES "D"	100 SERIES "D"	100 SERIES "D"
F	75	75	75
G ⊛	250 SERIES "D"	250 SERIES "D"	250 SERIES "D"
H	87	75	63
J	98	75	74
K	40	98	98
L	~	40	40
P	50	50	50
Q	~	313	313
R	~	~	313

NON-INTERSTATE #			
DIMENSION	D10-1 (1 DIGIT)	D10-2 (2 DIGIT)	D10-3 (3 DIGIT)
A	250	250	250
B	450	675	900
C	10	10	10
D	75	75	75
E	100 SERIES "D"	100 SERIES "D"	100 SERIES "D"
F	50	50	50
G ⊛	150 SERIES "D"	150 SERIES "D"	150 SERIES "D"
H	75	75	75
J	98	75	75
K	30	98	98
L	~	30	30
P	37.5	37.5	37.5
Q	~	225	225
R	~	~	225

⊛ OPTICALLY CENTER DIGITS ON VERTICAL ℄ OF PANEL.
ALL UNITS ARE IN MILLIMETERS (mm)

NOTES:

1. MILEPOST PANELS CONSIST OF A RETRO-REFLECTORIZED WHITE LEGEND AND BORDER ON A RETRO-REFLECTORIZED GREEN BACKGROUND.
2. MOUNT ALL MILEPOSTS ON STEEL U-POSTS (MIN. 2 LB./FT. [3 kg/m]) EXCEPT THE D10-6, WHICH IS MOUNTED ON A STEEL U-POST (MIN. 3 LB./FT. [4.5 kg/m]) AS NOTED IN THE SIGNING PLANS.
3. USE GALVANIZED OR CADMIUM PLATED 5/16" DIA. [M8]BOLT, NUT AND WASHER, AND JAM THREADS AFTER TIGHTENING. USE 5/16" [8] DIA. ALUMINUM OR CADMIUM PLATED BOLT RIVETS OR PAINT RIVET HEADS WITH BRILLIANT GREEN SIGN ENAMEL.
4. DO NOT RELOCATE OR MOVE A MILEPOST ONCE IT HAS BEEN PROPERLY PLACED.
5. USE HARDWARE MEETING THE REQUIREMENTS OF SECTION 704.

UNITS SHOWN IN BRACKETS [] ARE METRIC AND ARE IN MILLIMETERS (mm) UNLESS OTHER UNITS ARE SHOWN.

DETAILED DRAWING

REFERENCE STANDARD SPEC. SECTION 619, 704

DWG. NO. 619-32

MILEPOST (REFERENCE POST) DETAILS

EFFECTIVE: SEPTEMBER 2014

MDT MONTANA DEPARTMENT OF TRANSPORTATION

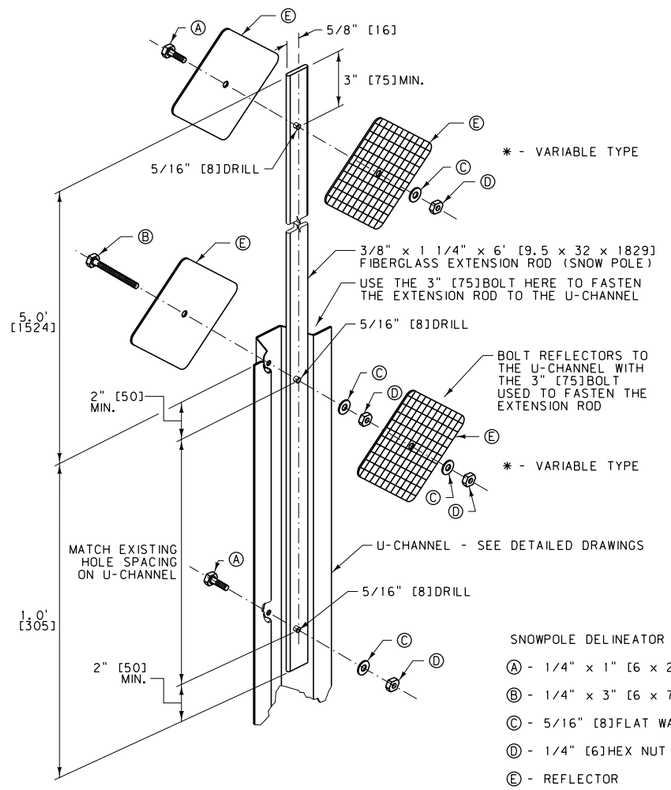

SNOWPOLE DELINEATOR NOTES:

Ⓐ - 1/4" x 1" [6 x 25]BOLT

Ⓑ - 1/4" x 3" [6 x 75]BOLT

Ⓒ - 5/16" [8]FLAT WASHER

Ⓓ - 1/4" [6]HEX NUT

Ⓔ - REFLECTOR

✱ = MATCH SNOWPOLE DELINEATOR WITH ROADWAY DELINEATOR.

SNOWPOLE DELINEATOR DETAIL

DESIGN A USAGE:

USE FOR CONTINUOUS DELINEATION AND RT. SHOULDER OF ALL ROUTES.

DESIGN H USAGE:

USE ON LT. SHOULDER OF INTERSTATE ROUTES.

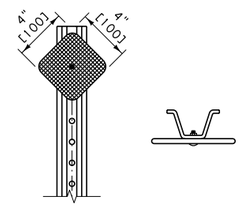

DESIGN A (WHITE)
DESIGN H (YELLOW)

DESIGN B USAGE:

USE ON LT. SHOULDER OF INTERSTATE RAMPS AND AUTHORIZED VEHICLE ONLY CROSSOVERS.

DESIGN G USAGE:

USE ON RT. SHOULDER OF INTERSTATE RAMPS.

DESIGN J USAGE:

USE FOR TRUCK ESCAPE RAMPS AND INTERCHANGE OFF RAMPS FROM MID-POINT TO GORE LT & RT FOR WRONG WAY TRAVELERS.

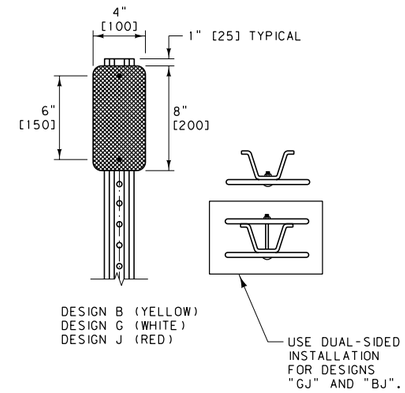

DESIGN B (YELLOW)
DESIGN G (WHITE)
DESIGN J (RED)

DESIGN C USAGE:

USE FOR CURVES WITH RADII 573' [170 m]OR LESS, BOTH OUTSIDE AND INSIDE OF CURVE.

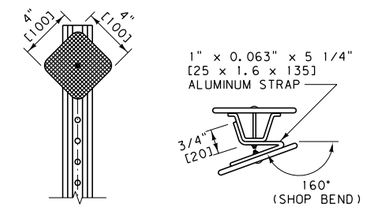

DESIGN C (WHITE)

NOTES:

1. SOME TYPICAL USES ARE SHOWN FOR EACH DESIGN. REFER TO THE MUTCD FOR SPECIFIC GUIDANCE.
2. USE HARDWARE MEETING THE REQUIREMENTS OF SECTION 704.

DESIGN D USAGE:

NON-INTERSTATE ROUTES: USE AT APPROACHES WITH STOP OR YIELD SIGNS. INTERSTATE ROUTES: USE AT INTERSECTION OF RAMPS AND CROSSROAD.

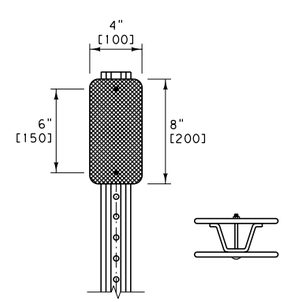

DESIGN D (YELLOW)

DESIGN F USAGE:

USE FOR CURVES WITH RADII GREATER THAN 573' [170 m]; 1433' [450 m] TO 765' [231 m] RADIUS: OUTSIDE ONLY, 764' [230 m] TO 573' [171 m] RADIUS: OUTSIDE AND INSIDE OF CURVE.

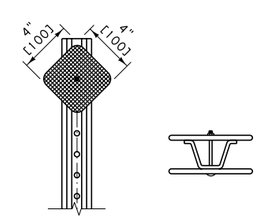

DESIGN F (WHITE)

DELINEATOR LEGEND	
DESIGN "A"	
DESIGN "B"	
DESIGN "C"	
DESIGN "D"	
DESIGN "F"	
DESIGN "G"	
DESIGN "H"	
DESIGN "J"	
DESIGN "GJ"	
DESIGN "BJ"	

UNITS SHOWN IN BRACKETS [] ARE METRIC AND ARE IN MILLIMETERS (mm) UNLESS OTHER UNITS ARE SHOWN.

DETAILED DRAWING	
REFERENCE STANDARD SPEC. SECTION 619, 704	DWG. NO. 619-34
DELINEATOR DETAILS	
EFFECTIVE: SEPTEMBER 2014	

MDT MONTANA DEPARTMENT OF TRANSPORTATION

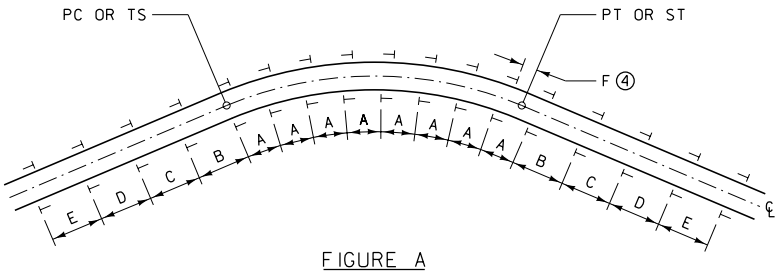

FIGURE A

SEE TABLE BELOW FOR SPACING VALUES

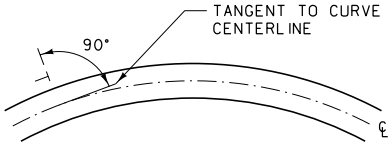

FIGURE B

HORIZONTAL CURVE SPACING TABLE					
RADIUS	SPACING ON CURVE	SPACING ON BOTH APPROACH TANGENTS			
	A	B	C	D	E
5730' & UP	300'	400'	400'	400'	400'
2865' - 5729'	225'	400'	400'	400'	400'
1910' - 2864'	160'	320'	400'	400'	400'
1433' - 1909'	130'	260'	400'	400'	400'
955' - 1432'	110'	220'	330'	400'	400'
716' - 954'	90'	185'	275'	400'	400'
478' - 715'	75'	150'	230'	300'	400'
287' - 477'	60'	125'	185'	300'	400'
0' - 286'	45'	90'	140'	275'	400'

METRIC HORIZONTAL CURVE SPACING TABLE					
RADIUS (m)	SPACING ON CURVE (m)	SPACING ON BOTH APPROACH TANGENTS (m)			
	A	B	C	D	E
1750 & UP	90	120	120	120	120
900 - 1749	65	120	120	120	120
600 - 899	50	95	120	120	120
450 - 599	40	75	120	120	120
300 - 449	35	65	100	120	120
200 - 299	25	55	80	120	120
150 - 199	20	45	70	90	120
100 - 149	20	35	55	90	120
0 - 99	15	25	40	80	120

NOTES:

① FURNISH RETRO-REFLECTIVE SHEETING ACCORDING TO THE STANDARD SPECIFICATIONS FOR RETRO-REFLECTIVE SHEETING B (HIGH INTENSITY). POSITION DELINEATOR FACES PERPENDICULAR TO THE TANGENT TO CURVE CENTERLINE AS SHOWN IN FIGURE B.

② MOUNT DELINEATORS ON METAL U-POSTS (1.12 LB./FT. [1.7 kg/m] MIN. AND 2 LB./FT. [3 kg/m]MAX.) WITH 3/16" [5]DIA. CADMIUM PLATED BOLT(S). DRILL OR PUNCH A MINIMUM OF TWELVE 3/8" [9.5]MAXIMUM DIAMETER HOLES ON 1 INCH [25]CENTERS FROM THE TOP OF THE POST. 1/4" [6.4]SQUARE HOLES MAY BE USED. IF SQUARE HOLES ARE USED, USE A LARGE HEADED BOLT OR AN APPROPRIATE WASHER. JAM THREADS AFTER TIGHTENING THE NUT TO PREVENT REMOVAL.

③ PLACE DELINEATORS AT A CONSTANT CLEARANCE DISTANCE FROM THE EDGE OF THE PAVEMENT EXCEPT WHERE GUARDRAIL OR OTHER OBSTRUCTIONS INTERFERE. ALIGN THE DELINEATORS WITH THE INSIDE EDGE OF THE OBSTRUCTION. CLEARANCE FOR DELINEATORS IS 6'-0" [1.8 m]ON INTERSTATE HIGHWAYS, 2'-0" TO 6'-0" [0.6 m TO 1.8 m]ON PRIMARY AND SECONDARY HIGHWAYS OR AS DETERMINED BY THE PROJECT MANAGER. THE STANDARD MOUNTING HEIGHT IS 4'-0" [1.2 m]TO THE TOP OF THE POST. SUPPLY POST LENGTHS TO MAINTAIN THE PROPER MOUNTING HEIGHT AND A MINIMUM OF 18" [0.45 m]EMBEDMENT.

④ SPACE DELINEATORS ACCORDING TO THE DISTANCES FOUND IN THE TABLE ABOVE OR AS SPECIFIED IN THE PLANS. IN FIGURE A, IF "F" IS GREATER THAN 20' [6 m]ADD ONE REGULAR DELINEATOR IN AT "A" SPACING. UNDER NORMAL SPACING, SHOULD A DELINEATOR FALL WITHIN A CROSSROAD OR APPROACH, IT MAY BE MOVED IN EITHER DIRECTION A DISTANCE NOT TO EXCEED ONE QUARTER OF THE NORMAL SPACING. ELIMINATE DELINEATORS STILL FALLING IN SUCH AREAS.

⑤ ALL DELINEATOR REFLECTORS HAVE 3/4" [18.75]CORNER RADII EXCEPT DESIGN "E".

⑥ MOUNT THE DELINEATOR REFLECTOR 1" [25]BELOW THE TOP OF THE METAL U-POST.

⑦ USE HARDWARE MEETING THE REQUIREMENTS OF SECTION 704.

UNITS SHOWN IN BRACKETS [] ARE METRIC AND ARE IN MILLIMETERS (mm) UNLESS OTHER UNITS ARE SHOWN.

DETAILED DRAWING

REFERENCE STANDARD SPEC. SECTION 619, 704

DWG. NO. 619-36

DELINEATOR PLACEMENT DETAILS

EFFECTIVE: SEPTEMBER 2014

MDT MONTANA DEPARTMENT OF TRANSPORTATION

TYPE 1
X3-2

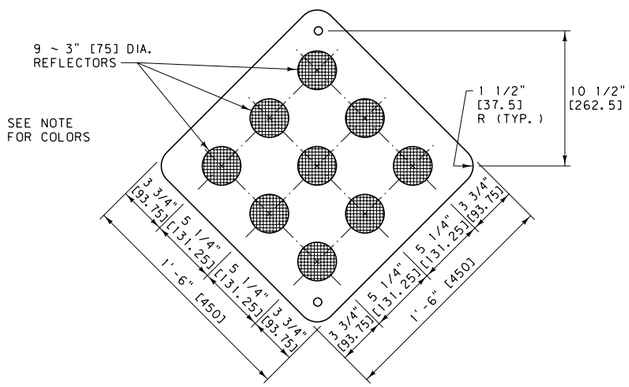

NOTE:
TYPE 1 OBJECT MARKERS HAVE YELLOW REFLECTORS ON A YELLOW OR BLACK BACKGROUND OR AN ALL YELLOW RETRO-REFLECTORIZED PANEL OF THE SAME SIZE. IF USED AS END OF ROAD MARKERS, TYPE 1 MARKERS ARE RETRO-REFLECTORIZED RED OR HAVE RED REFLECTORS ON A RED OR BLACK BACKGROUND.

TYPE 2
X3-3

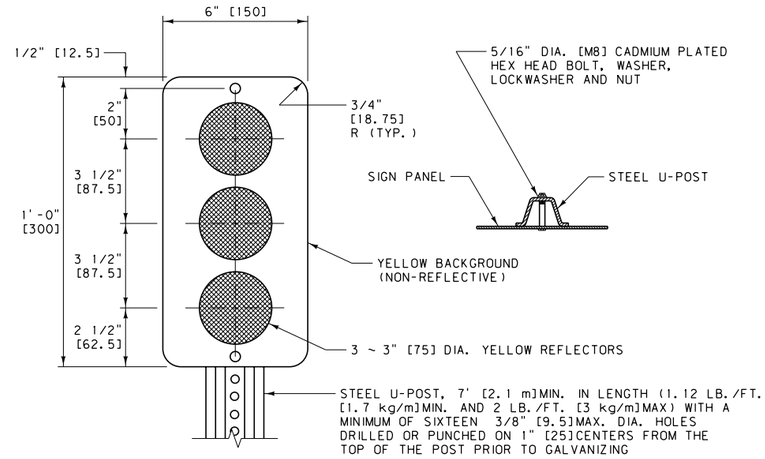

ALTERNATE DESIGN FOR TYPE 2 OBJECT MARKERS IS A YELLOW RETRO-REFLECTORIZED PANEL OF THE SAME SIZE.

TYPE 3
OM-3
(OM-3L SHOWN)

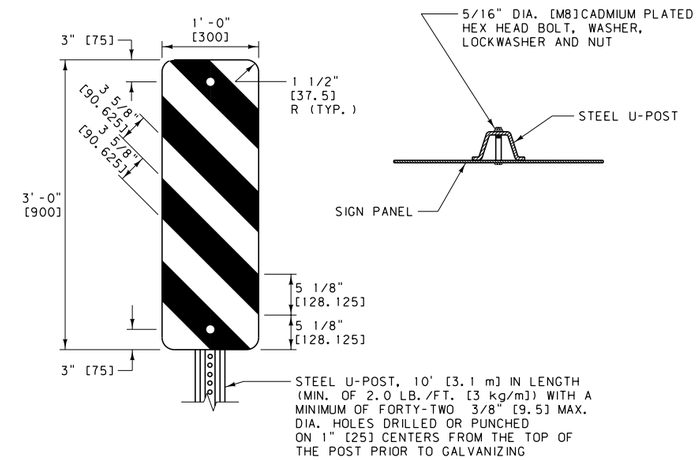

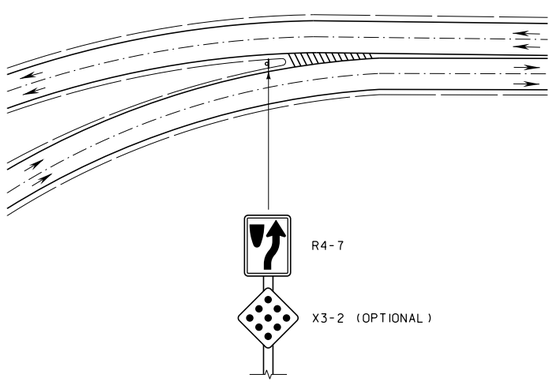

TYPICAL USE AND PLACEMENT

PLACEMENT OF X3-2 IS USED ONLY AS OPTIONAL TO ENHANCE TARGET VALUE WHEN NEEDED.

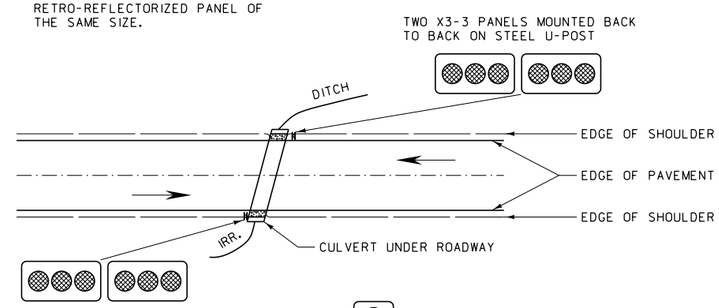

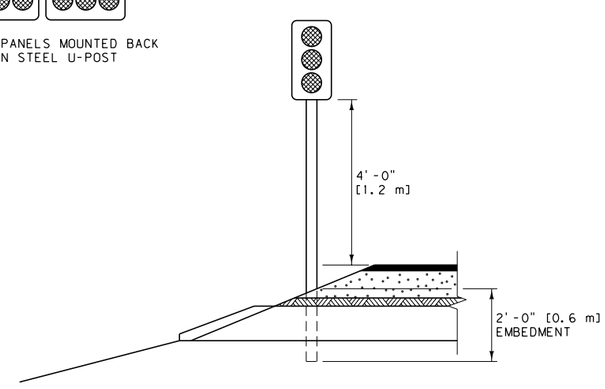

PLACE POST AND PANEL(S) SO THAT PANEL(S) ARE DIRECTLY ADJACENT TO INNER-MOST EDGE OF OBJECT NEAREST TRAVELED WAY.

TYPICAL USE AND PLACEMENT

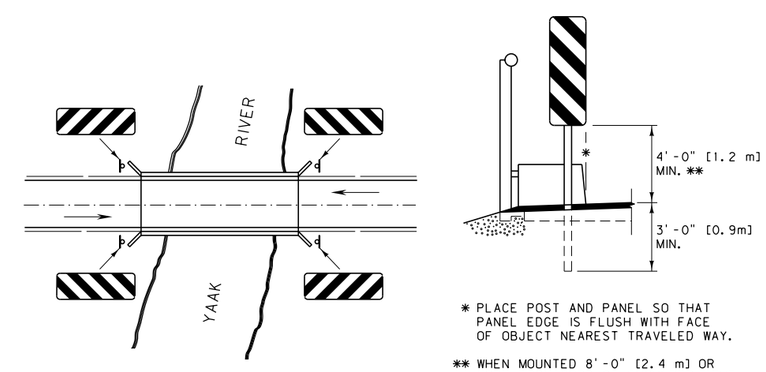

* PLACE POST AND PANEL SO THAT PANEL EDGE IS FLUSH WITH FACE OF OBJECT NEAREST TRAVELED WAY.

** WHEN MOUNTED 8'-0" [2.4 m] OR MORE FROM CURB OR SHOULDER, THE MOUNTING HEIGHT IS MEASURED FROM THE GROUND LINE INSTEAD OF THE EDGE OF PAVEMENT.

TYPICAL USE AND PLACEMENT

GENERAL NOTES:

(1) USE HARDWARE MEETING THE REQUIREMENTS OF SECTION 704.

UNITS SHOWN IN BRACKETS [] ARE METRIC AND ARE IN MILLIMETERS (mm) UNLESS OTHER UNITS ARE SHOWN.

DETAILED DRAWING	
REFERENCE STANDARD SPEC. SECTION 619, 704	DWG. NO. 619-38
OBJECT MARKER DESIGN AND PLACEMENT DETAILS FOR OBSTRUCTIONS ADJACENT TO OR WITHIN HIGHWAYS	
EFFECTIVE: SEPTEMBER 2014	
MDT MONTANA DEPARTMENT OF TRANSPORTATION	

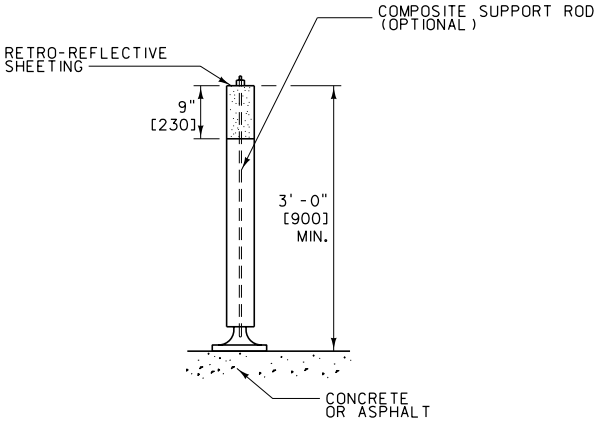

DETAILS ARE REPRESENTATIVE ONLY.
ACTUAL DESIGN USED/SPECIFIED MAY
VARY (SEE PLANS).

FLEXIBLE SURFACE-MOUNTED
DELINEATORS

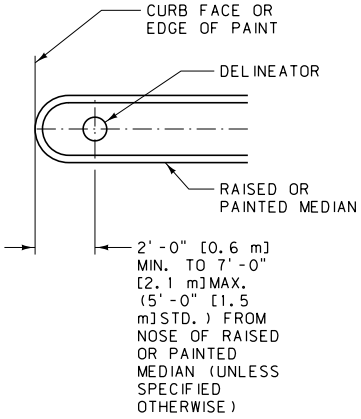

TYPICAL USE AND PLACEMENT

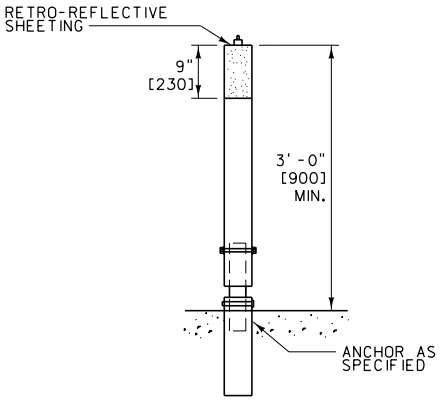

DETAILS ARE REPRESENTATIVE ONLY.
ACTUAL DESIGN USED/SPECIFIED MAY
VARY (SEE PLANS).

FLEXIBLE DRIVABLE
DELINEATORS

NOTES:

1. MOUNT OR DRIVE FLEXIBLE DELINEATORS TO THE MANUFACTURER'S SPECIFICATIONS.
2. THE EXACT LOCATION AND PLACEMENT OF THE FLEXIBLE DELINEATORS ARE SHOWN IN THE SIGNING PLANS.
3. USE HARDWARE MEETING THE REQUIREMENTS OF SECTION 704.

UNITS SHOWN IN BRACKETS [] ARE METRIC AND ARE IN MILLIMETERS (mm) UNLESS OTHER UNITS ARE SHOWN.

DETAILED DRAWING	
REFERENCE STANDARD SPEC. SECTION 619, 704	DWG. NO. 619-40
FLEXIBLE DELINEATORS	
EFFECTIVE: SEPTEMBER 2014	
MDT MONTANA DEPARTMENT OF TRANSPORTATION	

BI BARRICADE

B(1)-L SHOWN

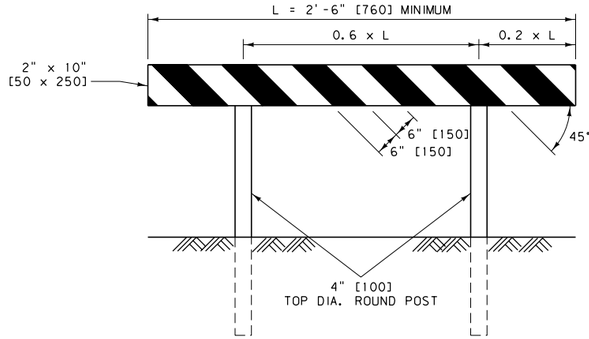

FRONT VIEW

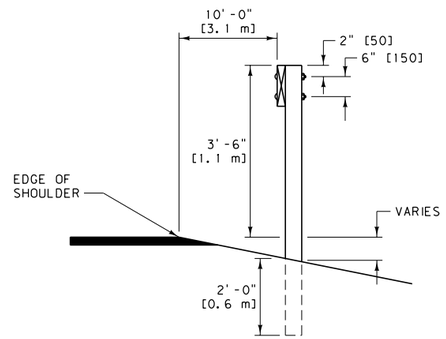

RIGHT SIDE VIEW

BARRICADE DETAILS

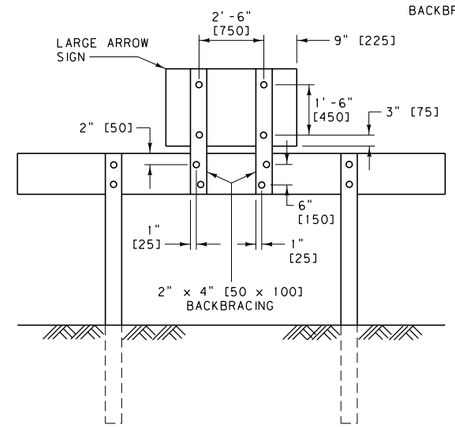

REAR VIEW

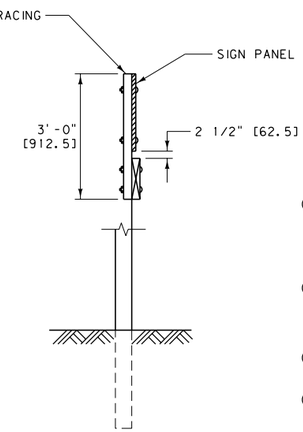

LEFT SIDE VIEW

SIGN MOUNTING DETAILS

NOTES:

1. CONSTRUCT ALL PORTIONS OF THE BARRICADE NOT IN GROUND CONTACT USING COMMON GRADE 2 OR BETTER S4S LUMBER. PAINT ALL NON-TREATED BARRICADE MEMBERS WITH TWO COATS OF WHITE PAINT IN ACCORDANCE WITH SECTION 710.
2. FURNISH TREATED, ROUND WOOD POSTS IN ACCORDANCE WITH 704.01.6. GAIN POSTS PER DETAIL DRAWING 619-20 AND FOR A LENGTH TO PROPERLY SEAT ALL PANELS OF THE BARRICADE.
3. USE 3/8" [M10]DIAMETER BOLTS, WASHERS, AND NUTS MEETING 704.01.13 FOR ALL CONNECTIONS.
4. ALL BARRICADES HAVE ALTERNATING RETRO-REFLECTIVE RED AND WHITE STRIPES, 6" [150]IN WIDTH AT AN ANGLE OF 45° TO THE VERTICAL, SLANTING DOWNWARD TOWARD THE SIDE OR SIDES ON WHICH TRAFFIC IS TO FLOW. NOMINAL DIMENSIONS OF ROLL MATERIAL FOR STRIPES IS ACCEPTABLE.
5. BARRICADES DESIGNATED "L" ARE PLACED ON THE LEFT SIDE OF APPROACHING TRAFFIC. BARRICADES DESIGNATED "R" ARE PLACED ON THE RIGHT SIDE OF APPROACHING TRAFFIC.
6. RETRO-REFLECTORIZE ALL BARRICADES WITH THE SHEETING MOUNTED ON SHEET ALUMINUM BACKING AT LEAST 0.019" [0.5] THICK. FURNISH ALUMINUM SHEETING IN ACCORDANCE WITH 704.01.1. SECURE RETRO-REFLECTIVE ALUMINUM SHEETING WITH ALUMINUM NAILS.
7. DETERMINE THE POST LENGTHS IN THE FIELD, COMPLYING WITH THE MOUNTING HEIGHTS AND FOUNDATION DEPTHS LISTED ON THIS SHEET.
8. USE MATERIALS FOR BARRICADE FRAMEWORK AND ASSEMBLY, INCLUDING ANY SIGNS AND MEANS OF ATTACHMENT, THAT MEET THE REQUIREMENTS FOR NCHRP 350 FOR WORK ZONE DEVICES. AS AN OPTION, SIGNS AND BARRICADES MAY BE MOUNTED DIRECTLY BEHIND BARRICADES ON SEPARATE SIGN SUPPORTS MEETING NCHRP 350 CRITERIA.
9. USE HARDWARE MEETING THE REQUIREMENTS OF SECTION 704.

BIII BARRICADE

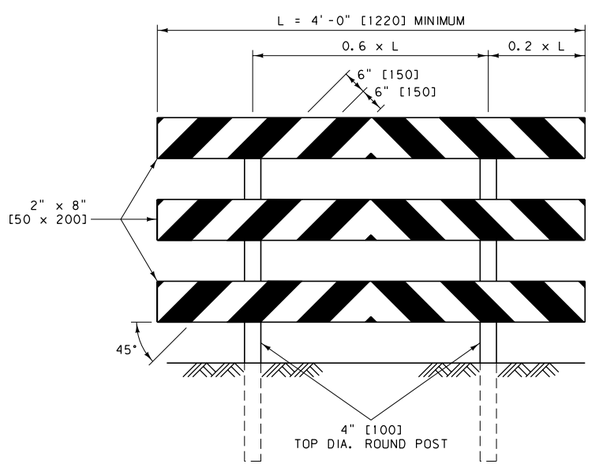

FRONT VIEW

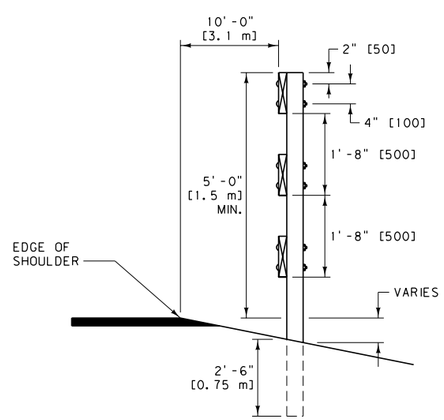

RIGHT SIDE VIEW

BARRICADE DETAILS

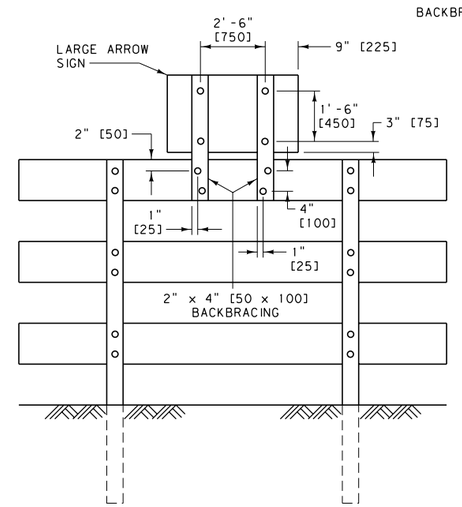

REAR VIEW

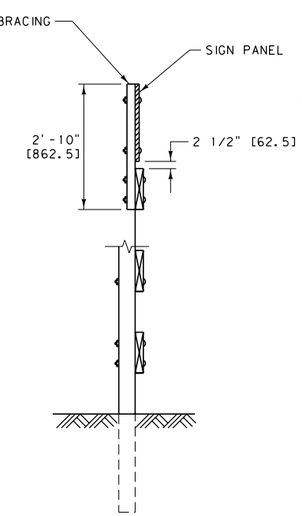

LEFT SIDE VIEW

SIGN MOUNTING DETAILS

UNITS SHOWN IN BRACKETS [] ARE METRIC AND ARE IN MILLIMETERS (mm) UNLESS OTHER UNITS ARE SHOWN.

DETAILED DRAWING	
REFERENCE STANDARD SPEC. SECTION 619, 704, 710	DWG. NO. 619-42
PERMANENT BARRICADE DESIGN DETAILS	
EFFECTIVE: SEPTEMBER 2014	

MDT MONTANA DEPARTMENT OF TRANSPORTATION

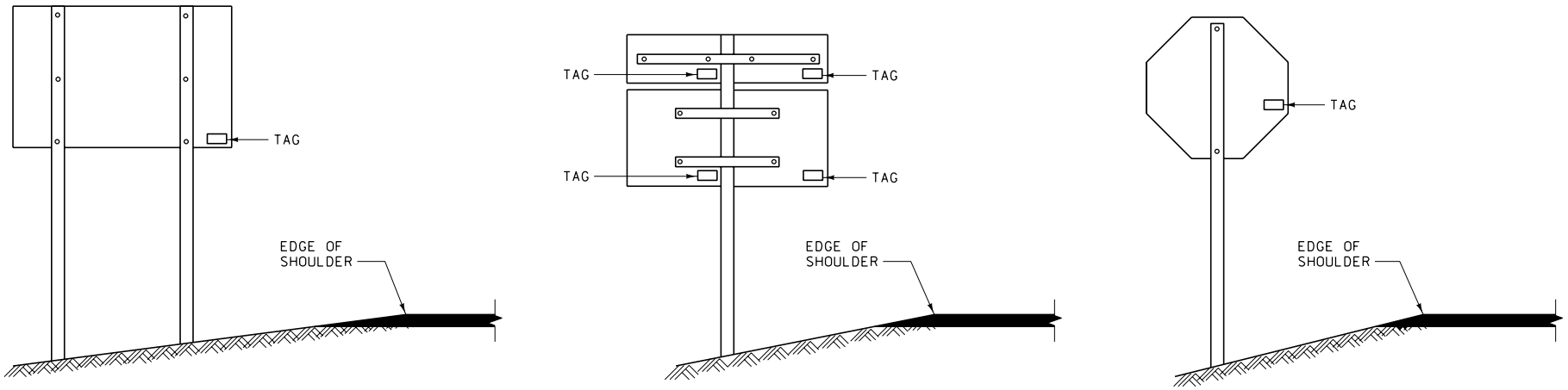

PLACEMENT DETAILS

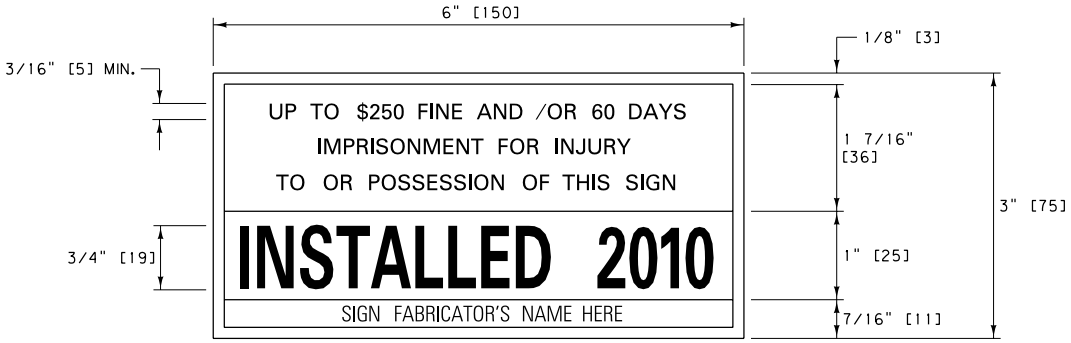

DATE TAG DETAIL

NOTES:

1. FURNISH AND PLACE INSTALLATION DATE TAGS ON ALL SIGNS PRIOR TO FINAL ACCEPTANCE OF THE PROJECT.
2. THE TAGS DISPLAY THE YEARS IN WHICH THE SIGNS WERE INSTALLED. SEE THE COLOR SEQUENCE TABLE SHOWN ON THIS DRAWING FOR THE APPROPRIATE COLORS. DATE TAGS ARE TO BE RETRO-REFLECTIVE.
3. PLACE A TAG ON THE BACK OF EACH SIGN, LOCATED NEAR THE LOWER CORNER OF THE SIGN NEAREST THE EDGE OF ROADWAY, TO BE VISIBLE FROM THE ROADWAY AS SHOWN IN THE EXAMPLES ABOVE.
4. PLACE TAGS ON ANY NEW SIGN INSTALLED IN THE FIELD AS ROUTINE MAINTENANCE BY MDT FORCES. MAINTENANCE DESIGN DATE TAGS CAN BE ORDERED FROM THE SIGN SHOP IN HELENA.
5. USE HARDWARE MEETING THE REQUIREMENTS OF SECTION 704.

DATE TAG COLOR SEQUENCE

DATE TAG COLOR CORRESPONDS TO THE LAST DIGIT OF THE INSTALLATION YEAR AS FOLLOWS:

0 - YELLOW	5 - RED
1 - WHITE	6 - PURPLE
2 - LIGHT BLUE	7 - ORANGE
3 - GOLD	8 - BLUE
4 - LIGHT GREEN	9 - GREEN

UNITS SHOWN IN BRACKETS [] ARE METRIC AND ARE IN MILLIMETERS (mm) UNLESS OTHER UNITS ARE SHOWN.

DETAILED DRAWING

REFERENCE
STANDARD SPEC.
SECTION 619, 704

DWG. NO.
619-44

INSTALLATION
DATE TAGS

EFFECTIVE: SEPTEMBER 2014

MDT MONTANA DEPARTMENT OF TRANSPORTATION

LETTER	QUANTITIES AREA (FT²)	QUANTITIES PAINT (GAL.)	QUANTITIES EPOXY (GAL.)	METRIC QUANTITIES AREA (m²)	METRIC QUANTITIES PAINT (liters)	METRIC QUANTITIES EPOXY (liters)
A	5.72	0.06	0.08	0.52	0.22	0.29
B	7.56	0.08	0.10	0.68	0.29	0.38
C	5.22	0.06	0.07	0.47	0.20	0.26
D	6.61	0.07	0.09	0.60	0.26	0.34
E	6.78	0.07	0.09	0.61	0.26	0.34
F	5.00	0.05	0.07	0.45	0.19	0.25
G	6.06	0.06	0.08	0.54	0.23	0.30
H	6.44	0.07	0.09	0.58	0.25	0.32
I	2.78	0.03	0.04	0.25	0.11	0.14
J	3.87	0.04	0.05	0.35	0.15	0.20
K	6.58	0.07	0.09	0.59	0.25	0.33
L	4.11	0.04	0.06	0.37	0.16	0.21
M	7.84	0.08	0.11	0.71	0.31	0.40
N	7.33	0.08	0.10	0.66	0.28	0.37
O	6.28	0.07	0.09	0.57	0.25	0.32
P	5.70	0.06	0.08	0.51	0.22	0.28
Q	6.42	0.07	0.09	0.58	0.25	0.32
R	6.66	0.07	0.09	0.60	0.26	0.34
S	6.68	0.07	0.09	0.60	0.26	0.34
T	4.11	0.04	0.06	0.37	0.16	0.21
U	5.88	0.06	0.08	0.53	0.23	0.30
V	5.06	0.05	0.07	0.46	0.20	0.26
W	7.38	0.08	0.10	0.66	0.28	0.37
X	4.99	0.05	0.07	0.45	0.19	0.25
Y	4.17	0.04	0.06	0.38	0.16	0.21
Z	5.44	0.06	0.07	0.49	0.21	0.27

NOTES:

1. EACH SQUARE EQUALS 4 INCHES [100 mm].
2. ALL PAVEMENT MARKINGS ARE TO CONFORM TO THE REQUIREMENTS OF THE "MANUAL ON UNIFORM TRAFFIC CONTROL DEVICES" AND "STANDARD HIGHWAY SIGNS" PUBLICATIONS, FROM THE FEDERAL HIGHWAY ADMINISTRATION.
3. ALL LETTERS ARE TO BE WHITE.
4. USE THE SIZES OF LETTERS SHOWN UNLESS SMALLER OR LARGER SIZES ARE NEEDED. THE SIZE OF LETTERS MAY BE SCALED PROPORTIONATELY DOWN BY APPROXIMATELY ONE-THIRD FOR LOW-SPEED, URBAN CONDITIONS. THE MINIMUM HEIGHT OF ANY LETTER IS 6.0 FEET [1.8 m]. LARGER SIZES MAY BE USED FOR ABOVE AVERAGE SPEEDS AND OTHER CRITICAL LOCATIONS.
5. DO NOT EXCEED MORE THAN ONE LANE IN WIDTH FOR ANY PAVEMENT MARKINGS EXCEPT IN THE CASE OF THE WORD "SCHOOL". SEE DTL. DWG. NO. 620-10 FOR MORE INFORMATION.
6. FOR MULTIPLE LINES OF INFORMATION, PLACE THE INFORMATION SO IT READS IN THE DIRECTION OF TRAVEL. DO NOT EXCEED THREE LINES OF INFORMATION AT ANY LOCATION.
7. WHEN WORDS AND SYMBOLS ARE USED IN COMBINATION, SPACE THEM AT LEAST FOUR TIMES THE HEIGHT OF CHARACTERS FOR LOW-SPEED ROADS, BUT NOT MORE THAN TEN TIMES THE HEIGHT OF THE CHARACTERS UNDER ANY CONDITION.
8. ON NARROW, LOW-SPEED BICYCLE PATHS, SIZES OF LETTERS MAY BE SMALLER THAN SUGGESTED, BUT TO THE RELATIVE SCALE.
9. QUANTITIES ARE BASED ON THE SIZES OF PAVEMENT MARKINGS SHOWN AND ARE FOR ESTIMATING PURPOSES ONLY.
10. PAINT VOLUMES ASSUME A 17 MIL [0.432 mm] THICKNESS. EPOXY VOLUMES ASSUME A 22 MIL [0.559 mm] THICKNESS.

UNITS SHOWN IN BRACKETS [] ARE METRIC AND ARE IN MILLIMETERS (mm) UNLESS OTHER UNITS ARE SHOWN.

DETAILED DRAWING

REFERENCE
STANDARD SPEC.
SECTION 620

DWG. NO.
620-00

PAVEMENT MARKINGS
(LETTERS)

EFFECTIVE: SEPTEMBER 2014

MDT MONTANA DEPARTMENT OF TRANSPORTATION

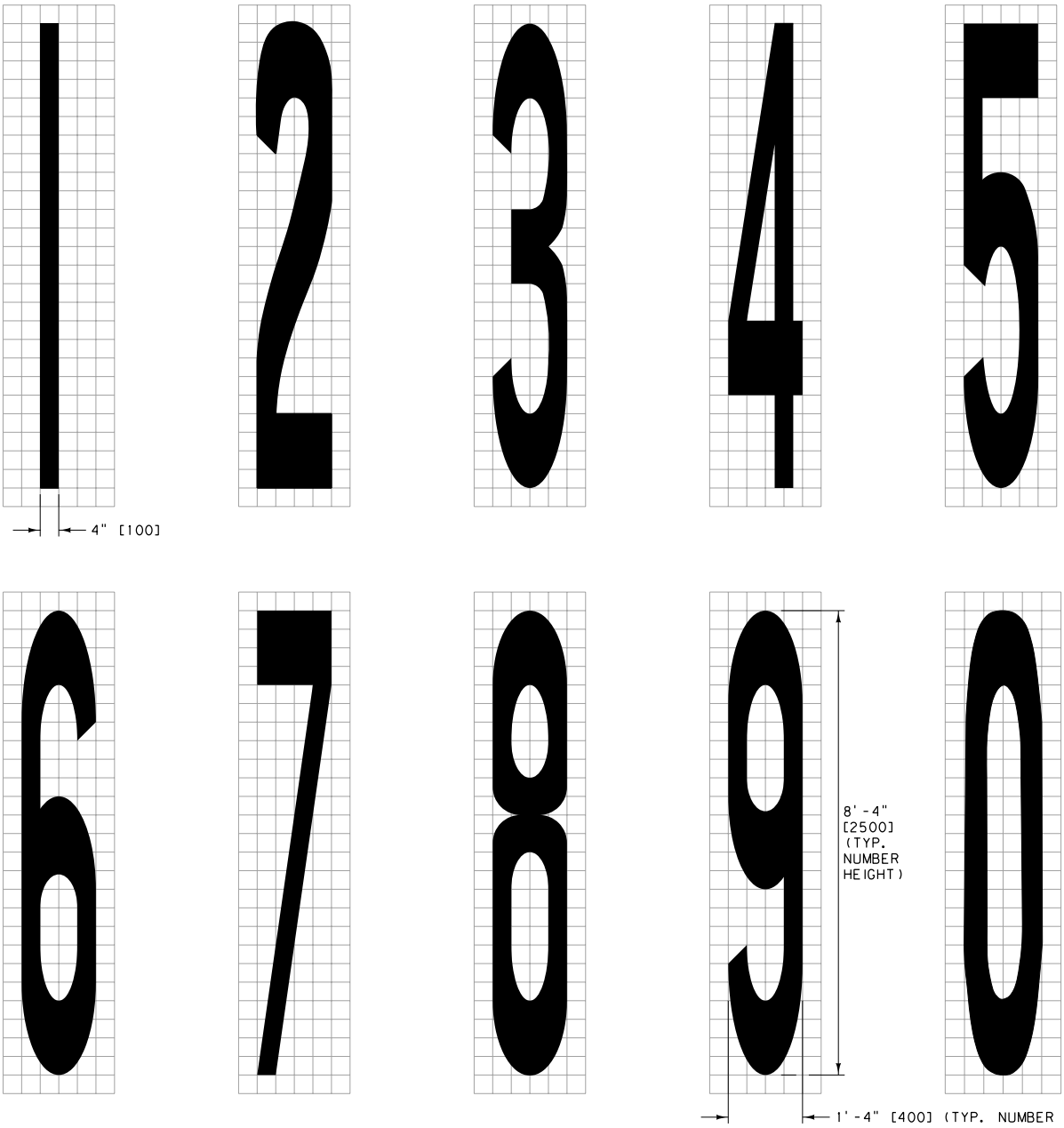

NOTES:

1. EACH SQUARE EQUALS 4 INCHES [100].
2. ALL PAVEMENT MARKINGS ARE TO CONFORM TO THE REQUIREMENTS OF THE "MANUAL ON UNIFORM TRAFFIC CONTROL DEVICES" AND "STANDARD HIGHWAY SIGNS" PUBLICATIONS, FROM THE FEDERAL HIGHWAY ADMINISTRATION.
3. ALL NUMBERS ARE TO BE WHITE.
4. USE THE SIZES OF NUMBERS SHOWN UNLESS SMALLER OR LARGER SIZES ARE NEEDED. THE SIZE OF NUMBERS MAY BE SCALED PROPORTIONATELY DOWN BY APPROXIMATELY ONE-THIRD FOR LOW-SPEED, URBAN CONDITIONS. THE MINIMUM HEIGHT OF ANY NUMBER IS 6 FEET [1.8 m]. LARGER SIZES MAY BE USED FOR ABOVE AVERAGE SPEEDS AND OTHER CRITICAL LOCATIONS.
5. DO NOT EXCEED MORE THAN ONE LANE IN WIDTH FOR ANY PAVEMENT MARKINGS EXCEPT IN THE CASE OF THE WORD "SCHOOL". SEE DTL. DWG. NO. 620-10 FOR MORE INFORMATION.
6. FOR MULTIPLE LINES OF INFORMATION, PLACE THE INFORMATION SO IT READS IN THE DIRECTION OF TRAVEL. DO NOT EXCEED THREE LINES OF INFORMATION AT ANY LOCATION.
7. WHEN WORDS AND SYMBOLS ARE USED IN COMBINATION, SPACE THEM AT LEAST FOUR TIMES THE HEIGHT OF CHARACTERS FOR LOW-SPEED ROADS, BUT NOT MORE THAN TEN TIMES THE HEIGHT OF THE CHARACTERS UNDER ANY CONDITION.
8. ON NARROW, LOW-SPEED BICYCLE PATHS, SIZES OF NUMBERS MAY BE SMALLER THAN SUGGESTED, BUT TO THE RELATIVE SCALE.
9. QUANTITIES ARE BASED ON THE SIZES OF PAVEMENT MARKINGS SHOWN AND ARE FOR ESTIMATING PURPOSES ONLY.
10. PAINT VOLUMES ASSUME A 17 MIL [0.432] THICKNESS. EPOXY VOLUMES ASSUME A 22 MIL [0.559] THICKNESS.

QUANTITIES

#	AREA (FT²)	PAINT (GAL.)	EPOXY (GAL.)
1	2.78	0.03	0.04
2	6.76	0.07	0.09
3	5.97	0.06	0.08
4	5.54	0.06	0.08
5	6.86	0.07	0.09
6	6.94	0.07	0.10
7	4.11	0.04	0.06
8	7.74	0.08	0.11
9	6.94	0.07	0.10
0	7.11	0.08	0.10

METRIC QUANTITIES

#	AREA (m²)	PAINT (liters)	EPOXY (liters)
1	0.25	0.11	0.14
2	0.61	0.26	0.34
3	0.54	0.23	0.30
4	0.50	0.22	0.28
5	0.62	0.27	0.35
6	0.62	0.27	0.35
7	0.37	0.16	0.21
8	0.70	0.30	0.39
9	0.62	0.27	0.35
0	0.62	0.27	0.35

UNITS SHOWN IN BRACKETS [] ARE METRIC AND ARE IN MILLIMETERS (mm) UNLESS OTHER UNITS ARE SHOWN.

DETAILED DRAWING

REFERENCE STANDARD SPEC. SECTION 620

DWG. NO. 620-05

PAVEMENT MARKINGS (NUMBERS)

EFFECTIVE: SEPTEMBER 2014

MDT MONTANA DEPARTMENT OF TRANSPORTATION

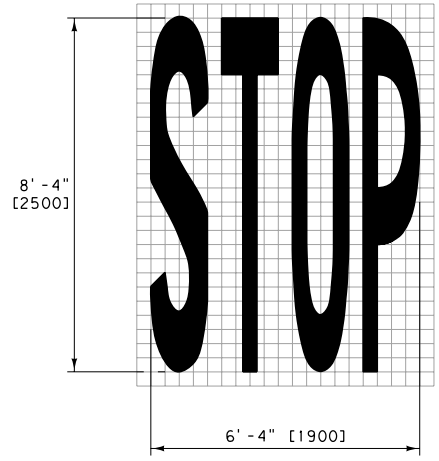

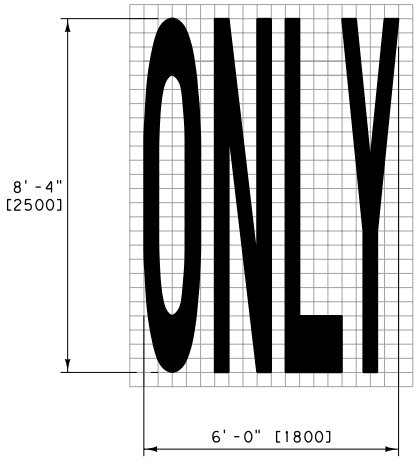

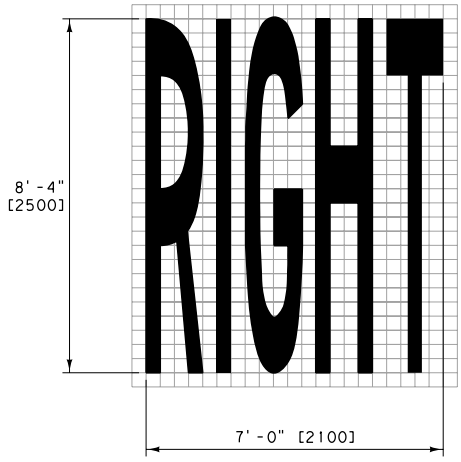

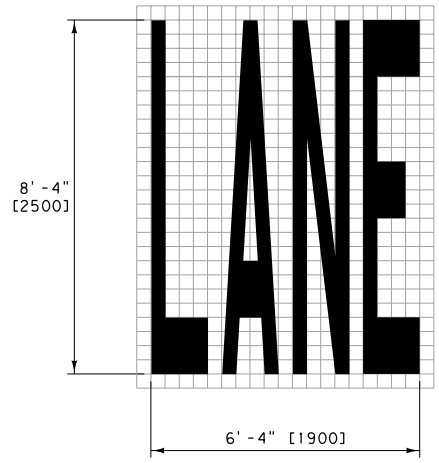

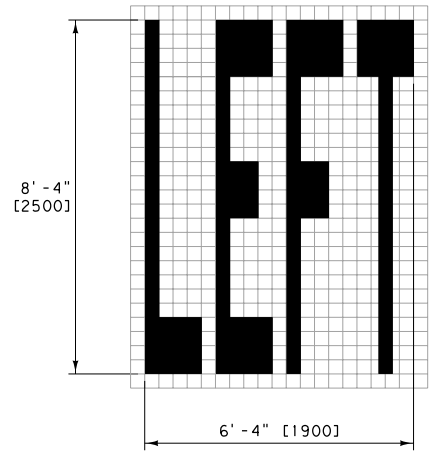

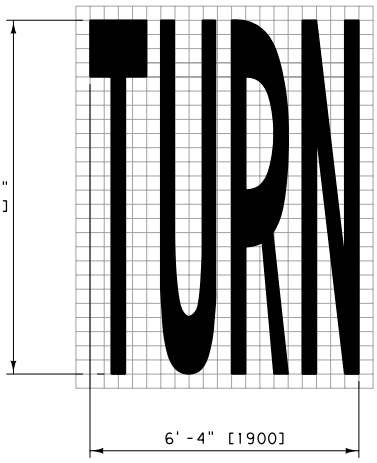

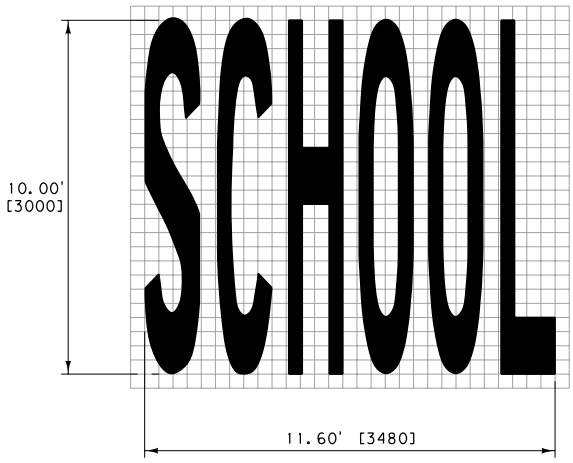

NOTE: EACH SQUARE EQUALS 0.40' [120]

NOTES:

1. UNLESS OTHERWISE NOTED EACH SQUARE EQUALS 4 [100] INCHES.
2. ALL PAVEMENT MARKINGS ARE TO CONFORM TO THE REQUIREMENTS OF THE "MANUAL ON UNIFORM TRAFFIC CONTROL DEVICES" AND "STANDARD HIGHWAY SIGNS" PUBLICATIONS, FROM THE FEDERAL HIGHWAY ADMINISTRATION.
3. ALL WORDS ARE TO BE WHITE.
4. USE THE SIZES OF WORDS SHOWN UNLESS SMALLER OR LARGER SIZES ARE NEEDED. THE SIZE OF WORDS MAY BE SCALED PROPORTIONATELY DOWN BY APPROXIMATELY ONE-THIRD FOR LOW-SPEED, URBAN CONDITIONS. THE MINIMUM HEIGHT OF ANY WORD IS 6 FEET [1.8 m]. LARGER SIZES MAY BE USED FOR ABOVE AVERAGE SPEEDS AND OTHER CRITICAL LOCATIONS.
5. DO NOT EXCEED MORE THAN ONE LANE IN WIDTH FOR ANY PAVEMENT MARKINGS, EXCEPT IN THE CASE OF THE WORD "SCHOOL". WHEN "SCHOOL" IS EXTENDED TO THE WIDTH OF TWO LANES, SCALE THE WORD UP PROPORTIONATELY TO FIT THE APPLICATION WIDTH.
6. FOR MULTIPLE LINES OF INFORMATION, PLACE THE INFORMATION SO IT READS IN THE DIRECTION OF TRAVEL. DO NOT EXCEED THREE LINES OF INFORMATION AT ANY LOCATION.
7. WHEN WORDS AND SYMBOLS ARE USED IN COMBINATION, SPACE THEM AT LEAST FOUR TIMES THE HEIGHT OF CHARACTERS FOR LOW-SPEED ROADS, BUT NOT MORE THAN TEN TIMES THE HEIGHT OF THE CHARACTERS UNDER ANY CONDITION.
8. ON NARROW, LOW-SPEED BICYCLE PATHS, SIZES OF LETTERS MAY BE SMALLER THAN SUGGESTED, BUT TO THE RELATIVE SCALE.
9. QUANTITIES ARE BASED ON THE SIZES OF PAVEMENT MARKINGS SHOWN AND ARE FOR ESTIMATING PURPOSES ONLY.
10. PAINT VOLUMES ASSUME A 17 MIL [0.432] THICKNESS. EPOXY VOLUMES ASSUME A 22 MIL [0.559] THICKNESS.

QUANTITIES

WORD	AREA (FT^2)	PAINT (GAL.)	EPOXY (GAL.)
STOP	22.77	0.24	0.31
ONLY	21.89	0.23	0.30
RIGHT	26.05	0.28	0.36
LANE	23.94	0.25	0.33
LEFT	20.00	0.21	0.27
TURN	23.98	0.25	0.33
SCHOOL	48.14	0.51	0.66

METRIC QUANTITIES

WORD	AREA (m^2)	PAINT (liters)	EPOXY (liters)
STOP	2.05	0.89	1.15
ONLY	1.98	0.85	1.11
RIGHT	2.34	1.01	1.31
LANE	2.16	0.93	1.21
LEFT	1.80	0.78	1.01
TURN	2.16	0.93	1.21
SCHOOL	4.54	1.96	2.54

UNITS SHOWN IN BRACKETS [] ARE METRIC AND ARE IN MILLIMETERS (mm) UNLESS OTHER UNITS ARE SHOWN.

DETAILED DRAWING

REFERENCE STANDARD SPEC. SECTION 620

DWG. NO. 620-10

PAVEMENT MARKINGS (WORDS)

EFFECTIVE: SEPTEMBER 2014

MDT MONTANA DEPARTMENT OF TRANSPORTATION

DIRECTIONAL ARROW FOR BIKE LANE

AREA = 4.56 FT² [0.41 m²]
P = 0.05 GAL. [0.18 L]
E = 0.06 GAL. [0.23 L]
(1 SQUARE = 4" [100])

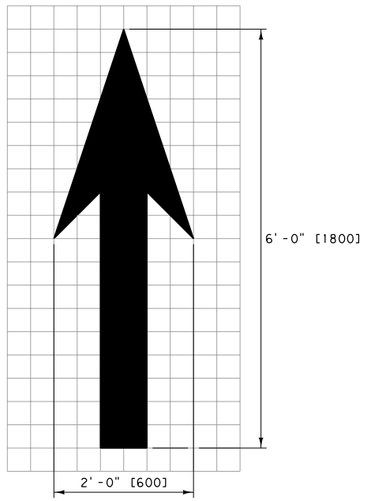

COMBINED ARROW

AREA = 25.99 FT² [2.54 m²]
P = 0.28 GAL. [1.10 L]
E = 0.36 GAL. [1.42 L]
(1 SQUARE = 0.32' [100])

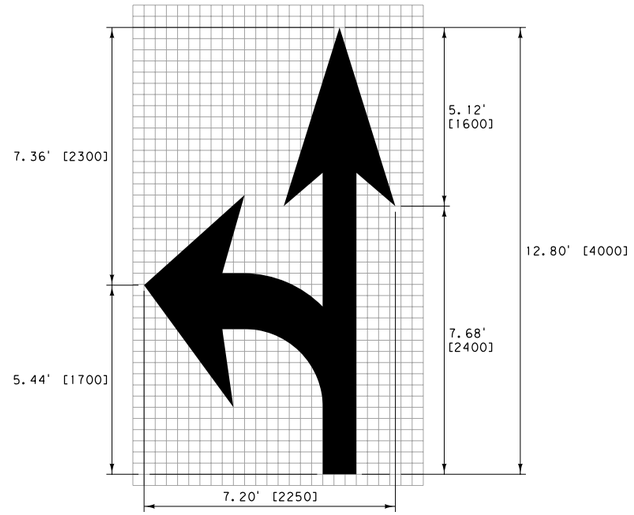

NOTE: REFER TO STRAIGHT & TURN ARROWS FOR MORE DETAIL.

18' [5.5m] LANE-REDUCTION ARROW (RIGHT)

(FOR LEFT LANE, USE MIRROR IMAGE)

AREA = 38.63 FT² [3.83 m²]
P = 0.41 GAL. [1.65 L]
E = 0.53 GAL. [2.14 L]
(1 SQUARE = 8" [200])

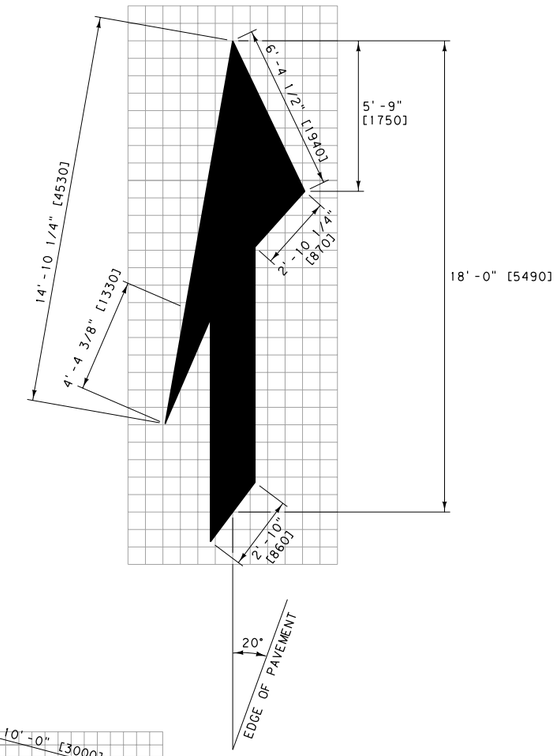

STRAIGHT ARROW

AREA = 11.42 FT² [1.12 m²]
P = 0.12 GAL. [0.48 L]
E = 0.16 GAL. [0.63 L]
(1 SQUARE = 0.32' [100])

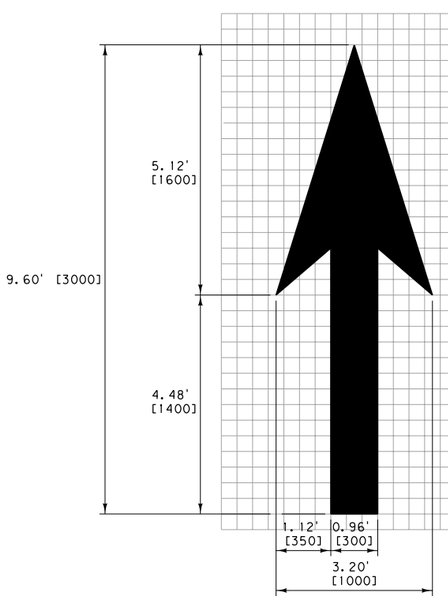

TURN ARROW

AREA = 15.57 FT² [1.52 m²]
P = 0.16 GAL. [0.66 L]
E = 0.21 GAL. [0.85 L]
(1 SQUARE = 0.32' [100])

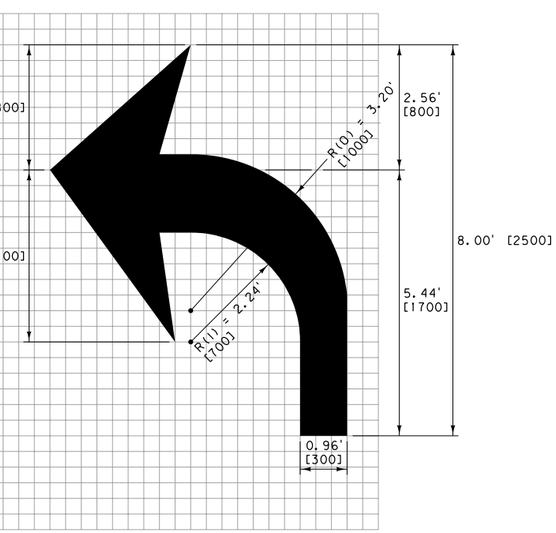

NOTE: R(O) = OUTSIDE CURVE RADIUS, R(I) = INSIDE CURVE RADIUS.

FREEWAY AND RAMP ARROW

AREA = 23.64 FT² [2.15 m²]
P = 0.25 GAL. [0.93 L]
E = 0.32 GAL. [1.20 L]
(1 SQUARE = 8" [200])

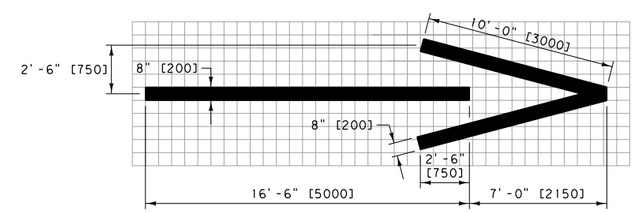

NOTES:

1. ALL PAVEMENT MARKINGS ARE TO CONFORM TO THE REQUIREMENTS OF THE "MANUAL ON UNIFORM TRAFFIC CONTROL DEVICES" AND "STANDARD HIGHWAY SIGNS" PUBLICATIONS, FROM THE FEDERAL HIGHWAY ADMINISTRATION.
2. ALL ARROWS ARE TO BE WHITE.
3. USE THE SIZES OF ARROWS SHOWN UNLESS SMALLER OR LARGER SIZES ARE NEEDED. THE SIZE OF ARROWS MAY BE SCALED PROPORTIONATELY DOWN BY APPROXIMATELY ONE-THIRD FOR LOW-SPEED, URBAN CONDITIONS. LARGER SIZES MAY BE USED FOR ABOVE AVERAGE SPEEDS AND OTHER CRITICAL LOCATIONS.
4. DO NOT EXCEED MORE THAN ONE LANE IN WIDTH FOR ANY PAVEMENT MARKINGS EXCEPT IN THE CASE OF THE WORD "SCHOOL". SEE DTL. DWG. NO. 620-10 FOR MORE INFORMATION.
5. WHEN WORDS AND SYMBOLS ARE USED IN COMBINATION, SPACE THEM AT LEAST FOUR TIMES THE HEIGHT OF CHARACTERS FOR LOW-SPEED ROADS, BUT NOT MORE THAN TEN TIMES THE HEIGHT OF THE CHARACTERS UNDER ANY CONDITION.
6. QUANTITIES ARE BASED ON THE SIZES OF PAVEMENT MARKINGS SHOWN AND ARE FOR ESTIMATING PURPOSES ONLY.
7. (P) - PAINT VOLUMES ASSUME A 17 MIL [0.432] THICKNESS.
   (E) - EPOXY VOLUMES ASSUME A 22 MIL [0.559] THICKNESS.

UNITS SHOWN IN BRACKETS [] ARE METRIC AND ARE IN MILLIMETERS (mm) UNLESS OTHER UNITS ARE SHOWN.

DETAILED DRAWING	
REFERENCE STANDARD SPEC. SECTION 620	DWG. NO. 620-15
PAVEMENT MARKINGS (ARROWS)	
EFFECTIVE: SEPTEMBER 2014	

MDT MONTANA DEPARTMENT OF TRANSPORTATION

ACCESSIBILITY PARKING SPACE SYMBOL

(STANDARD)

AREA = 11.04 FT² [0.99 m²]
P = 0.12 GAL. [0.43 L]
E = 0.15 GAL. [0.55 L]
(1 SQUARE = 4" [100])

(SPECIAL)

AREA = 23.68 FT² [2.24 m²]
P = 0.25 GAL. [0.97 L]
E = 0.32 GAL. [1.31 L]
(1 SQUARE = 4" [100])

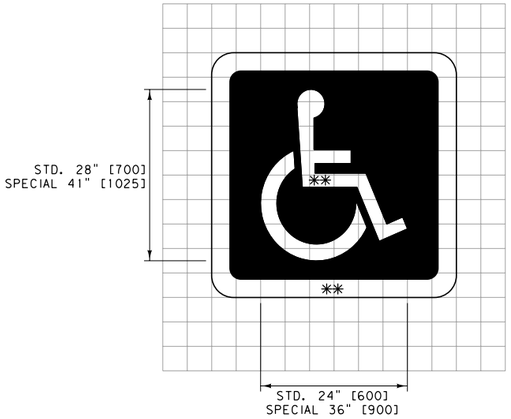

NOTE: CENTER SYMBOL IN PARKING STALL

** STROKE WIDTH:
STD. 3" [75]
SPECIAL 4" [100]

YIELD AHEAD TRIANGLE

(HIGH SPEED)

AREA = 36.54 FT² [3.33 m²]
P = 0.39 GAL. [1.44 L]
E = 0.50 GAL. [1.86 L]
(1 SQUARE = 4" [100])

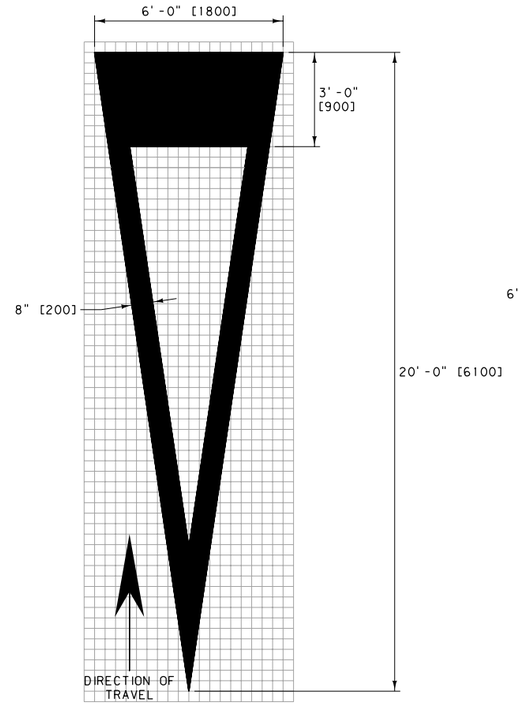

NOTE: FOR LOW SPEED INSTALLATIONS, THE 3'-0" [900] AND 20'-0" [6100] DIMENSIONS MAY BE REDUCED TO 2'-6" [750] AND 13'-0" [4000] RESPECTIVELY.

RAILROAD CROSSING SYMBOL

AREA = 58.10 FT² [5.42 m²]
P = 0.62 GAL. [2.34 L]
E = 0.80 GAL. [3.03 L]
(1 SQUARE = 8" [200])

MAY VARY ACCORDING TO LANE WIDTH

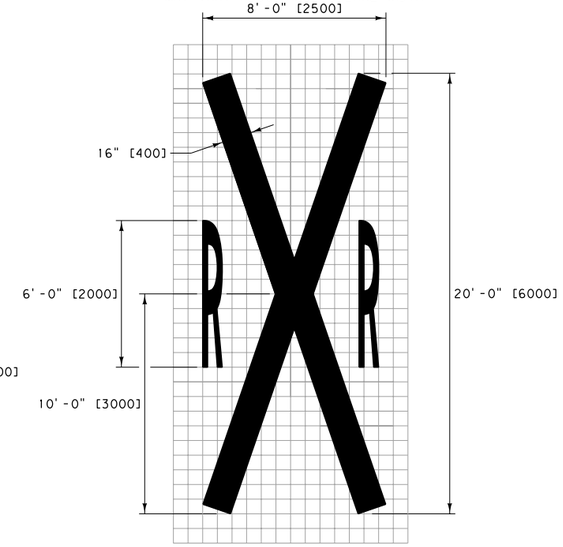

SPEED HUMP MARKINGS

AREA = 50.42 FT² [4.56 m²]
P = 0.53 GAL. [1.97 L]
E = 0.69 GAL. [2.55 L]
(1 SQUARE = 4" [100])

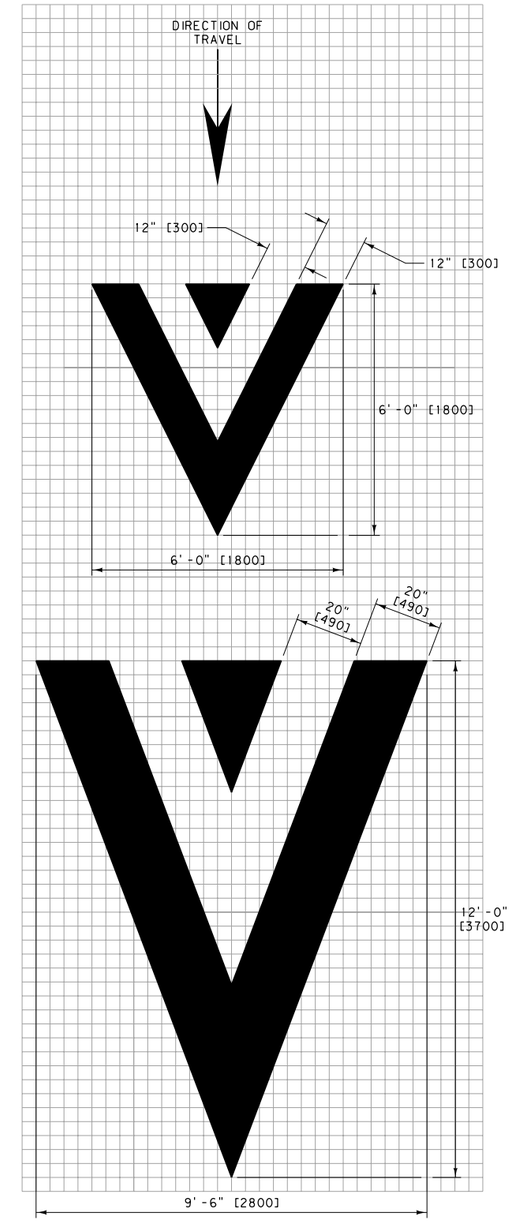

YIELD LINE LAYOUT

(QUANTITIES PER TRIANGLE)

(B = 2'-0" [600])
AREA = 3.00 FT² [0.27 m²]
P = 0.03 GAL. [0.12 L]
E = 0.04 GAL. [0.15 L]

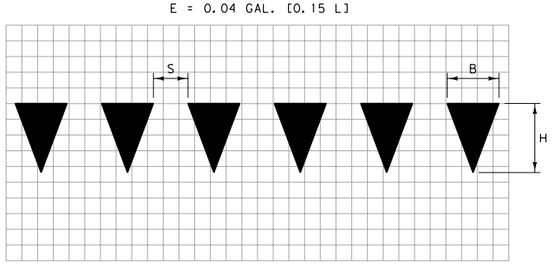

B = 2'-0" [600]
H = 3'-0" [900]
S = 12" [300]

NOTES:

1. ALL PAVEMENT MARKINGS ARE TO CONFORM TO THE REQUIREMENTS OF THE "MANUAL ON UNIFORM TRAFFIC CONTROL DEVICES" AND "STANDARD HIGHWAY SIGNS" PUBLICATIONS, FROM THE FEDERAL HIGHWAY ADMINISTRATION.
2. ALL SYMBOLS ARE TO BE WHITE EXCEPT FOR THE ACCESSIBILITIY PARKING SPACE SYMBOL WHICH HAS A BLUE BACKGROUND AND WHITE BORDER OPTIONS.
3. DO NOT EXCEED MORE THAN ONE LANE IN WIDTH FOR ANY PAVEMENT MARKINGS EXCEPT IN THE CASE OF THE WORD "SCHOOL". SEE DTL. DWG. NO. 620-10 FOR MORE INFORMATION.
4. WHEN WORDS AND SYMBOLS ARE USED IN COMBINATION, SPACE THEM AT LEAST FOUR TIMES THE HEIGHT OF CHARACTERS FOR LOW-SPEED ROADS, BUT NOT MORE THAN TEN TIMES THE HEIGHT OF THE CHARACTERS UNDER ANY CONDITION.
5. QUANTITIES ARE BASED ON THE SIZES OF PAVEMENT MARKINGS SHOWN AND ARE FOR ESTIMATING PURPOSES ONLY.
6. (P) - PAINT VOLUMES ASSUME A 17 MIL [0.432] THICKNESS.
   (E) - EPOXY VOLUMES ASSUME A 22 MIL [0.559] THICKNESS.

UNITS SHOWN IN BRACKETS [] ARE METRIC AND ARE IN MILLIMETERS (mm) UNLESS OTHER UNITS ARE SHOWN.

DETAILED DRAWING	
REFERENCE STANDARD SPEC. SECTION 620	DWG. NO. 620-20
PAVEMENT MARKINGS (SYMBOLS)	
EFFECTIVE: SEPTEMBER 2014	
MDT MONTANA DEPARTMENT OF TRANSPORTATION	

SHARROW SYMBOL

AREA = 12.52 FT² [1.12 m²]
P = 0.13 GAL. [0.48 L]
E = 0.17 GAL. [0.63 L]
(1 SQUARE = 4" [100])

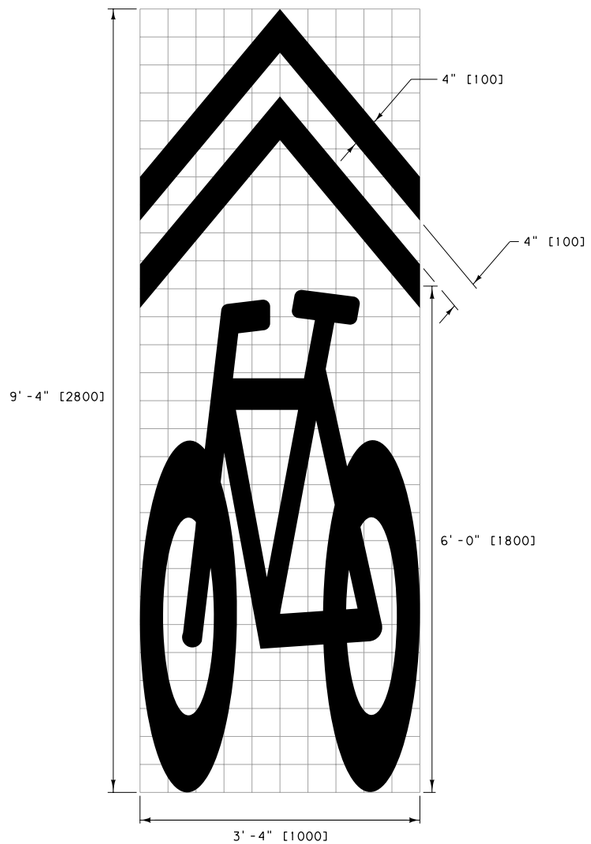

BIKE LANE SYMBOL

AREA = 5.95 FT² [0.54 m²]
P = 0.06 GAL. [0.23 L]
E = 0.08 GAL. [0.30 L]
(1 SQUARE = 4" [100])

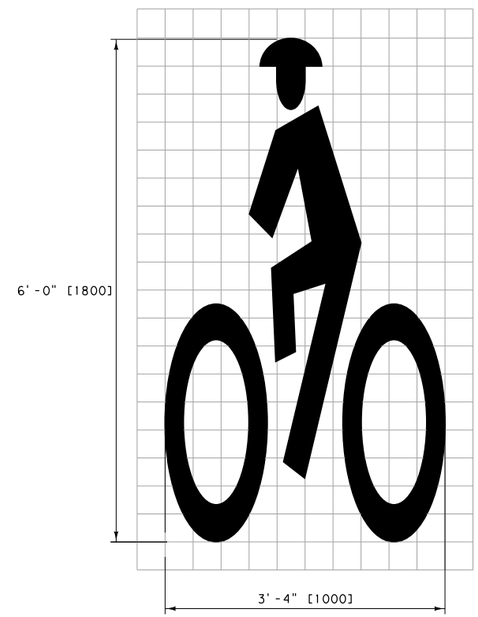

PREFERENTIAL LANE SYMBOL

AREA = 11.16 FT² [1.05 m²]
P = 0.12 GAL. [0.45 L]
E = 0.15 GAL. [0.59 L]
(1 SQUARE = 0.65' [200])

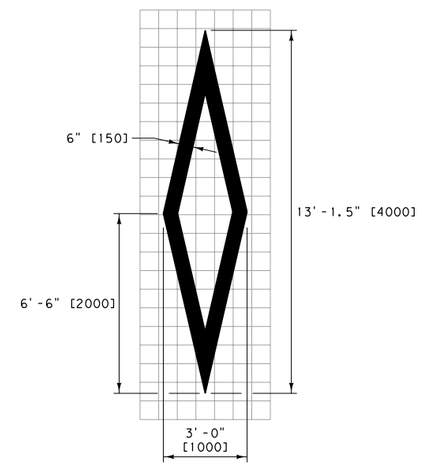

NOTES:

1. ALL PAVEMENT MARKINGS ARE TO CONFORM TO THE REQUIREMENTS OF THE "MANUAL ON UNIFORM TRAFFIC CONTROL DEVICES" AND "STANDARD HIGHWAY SIGNS" PUBLICATIONS, FROM THE FEDERAL HIGHWAY ADMINISTRATION.
2. ALL SYMBOLS ARE TO BE WHITE EXCEPT FOR THE ACCESSIBILITIY PARKING SPACE SYMBOL WHICH HAS A BLUE BACKGROUND AND WHITE BORDER OPTIONS.
3. DO NOT EXCEED MORE THAN ONE LANE IN WIDTH FOR ANY PAVEMENT MARKINGS EXCEPT IN THE CASE OF THE WORD "SCHOOL". SEE DTL. DWG. NO. 620-10 FOR MORE INFORMATION.
4. WHEN WORDS AND SYMBOLS ARE USED IN COMBINATION, SPACE THEM AT LEAST FOUR TIMES THE HEIGHT OF CHARACTERS FOR LOW-SPEED ROADS, BUT NOT MORE THAN TEN TIMES THE HEIGHT OF THE CHARACTERS UNDER ANY CONDITION.
5. QUANTITIES ARE BASED ON THE SIZES OF PAVEMENT MARKINGS SHOWN AND ARE FOR ESTIMATING PURPOSES ONLY.
6. (P) - PAINT VOLUMES ASSUME A 17 MIL [0.432] THICKNESS.
   (E) - EPOXY VOLUMES ASSUME A 22 MIL [0.559] THICKNESS.

UNITS SHOWN IN BRACKETS [] ARE METRIC AND ARE IN MILLIMETERS (mm) UNLESS OTHER UNITS ARE SHOWN.

DETAILED DRAWING	
REFERENCE STANDARD SPEC. SECTION 620	DWG. NO. 620-25
PAVEMENT MARKINGS (SYMBOLS)	
EFFECTIVE: SEPTEMBER 2014	
MDT MONTANA DEPARTMENT OF TRANSPORTATION	

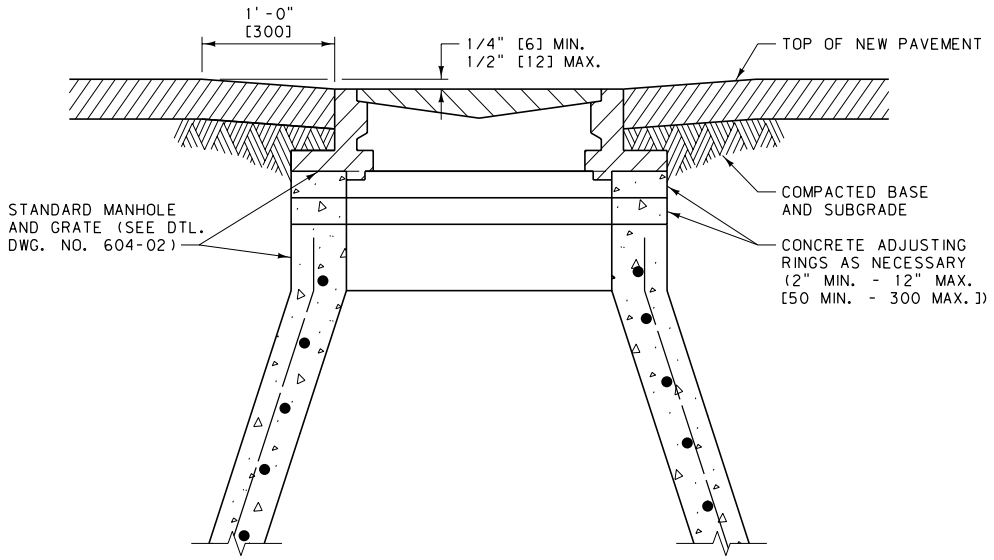

NOTES:

1. ADJUST MANHOLES UPWARD WITH ADJUSTING RINGS UNDER FRAME.
2. ADJUST MANHOLES DOWNWARD BY REMOVING CONE AND BARREL SECTIONS AS NECESSARY AND REPLACING WITH SECTIONS OF LENGTH REQUIRED TO MATCH GRADE.
3. SLOPE MANHOLE FRAME AS REQUIRED TO MATCH SLOPE OF STREET.
4. MAKE FINAL MANHOLE ADJUSTMENTS BEFORE PAVING.

MANHOLE ADJUSTMENT DETAIL

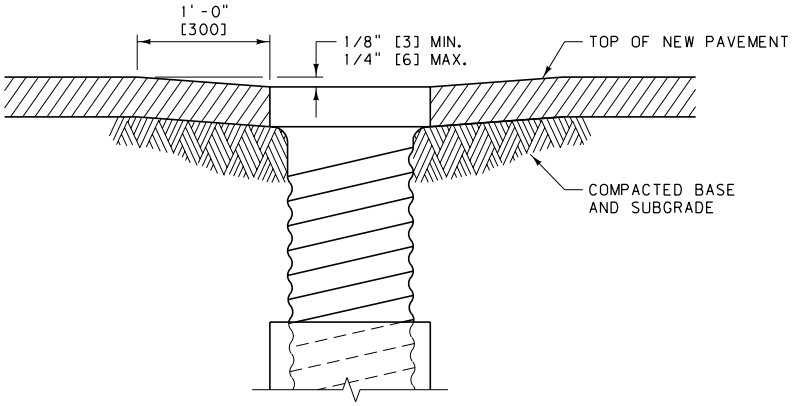

NOTES:

1. ADJUST WATER VALVES UPWARD OR DOWNWARD AS REQUIRED.
2. MAKE FINAL ADJUSTMENT BEFORE PAVING.

VALVE BOX ADJUSTMENT DETAIL

UNITS SHOWN IN BRACKETS [] ARE METRIC AND ARE IN MILLIMETERS (mm) UNLESS OTHER UNITS ARE SHOWN.

DETAILED DRAWING	
REFERENCE STANDARD SPEC. SECTION 604, 621	DWG. NO. 621-00
MANHOLE AND VALVE BOX ADJUSTMENT DETAILS	
EFFECTIVE: SEPTEMBER 2014	
MDT MONTANA DEPARTMENT OF TRANSPORTATION	

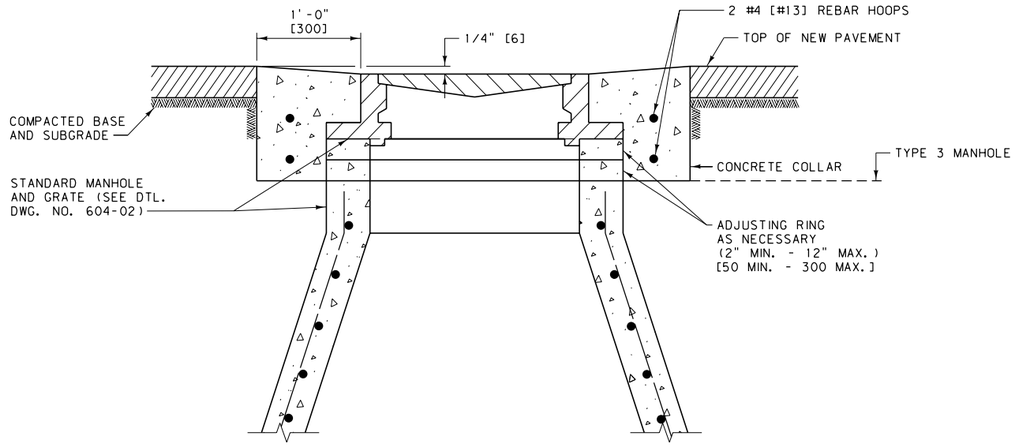

NOTES:

1. ADJUST MANHOLES UPWARD WITH ADJUSTING RINGS UNDER FRAME.
2. ADJUST MANHOLES DOWNWARD BY REMOVING CONE AND BARREL SECTIONS AS NECESSARY AND REPLACING WITH SECTIONS OF LENGTH REQUIRED TO MATCH GRADE.
3. SLOPE MANHOLE FRAME AS REQUIRED TO MATCH SLOPE OF STREET.
4. CONSTRUCT CONCRETE APRON OF CLASS GENERAL CONCRETE OR APPROVED EQUAL.

MANHOLE ADJUSTMENT DETAIL

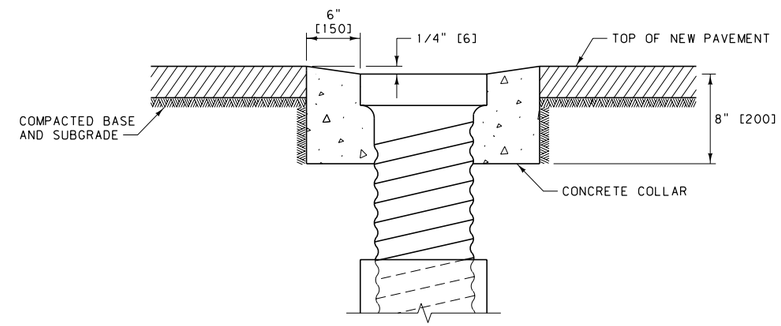

NOTES:

1. ADJUST WATER VALVES UPWARD OR DOWNWARD AS REQUIRED.
2. CONSTRUCT CONCRETE APRON OF CLASS GENERAL CONCRETE OR APPROVED EQUAL.

VALVE BOX ADJUSTMENT DETAIL

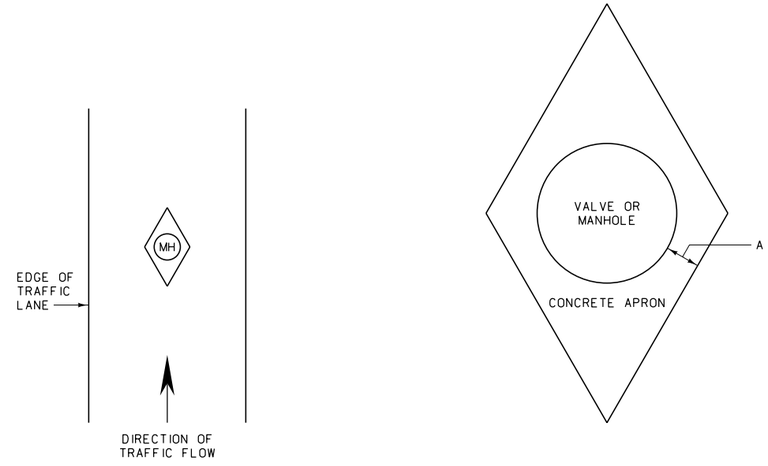

TYPE	DIMENSIONS	CONCRETE APRON QUANTITIES
	A	CLASS GENERAL CONCRETE
MANHOLE	1'-0" [300]	0.5 C.Y. [0.4m³]
VALVE	0'-6" [150]	0.1 C.Y. [0.0m³]

CONCRETE APRON DETAIL

UNITS SHOWN IN BRACKETS [] ARE METRIC AND ARE IN MILLIMETERS (mm) UNLESS OTHER UNITS ARE SHOWN.

DETAILED DRAWING

REFERENCE STANDARD SPEC. SECTION 604, 621

DWG. NO. 621-05

OPTIONAL MANHOLE AND VALVE BOX ADJUSTMENT DETAILS

EFFECTIVE: SEPTEMBER 2014

MDT MONTANA DEPARTMENT OF TRANSPORTATION

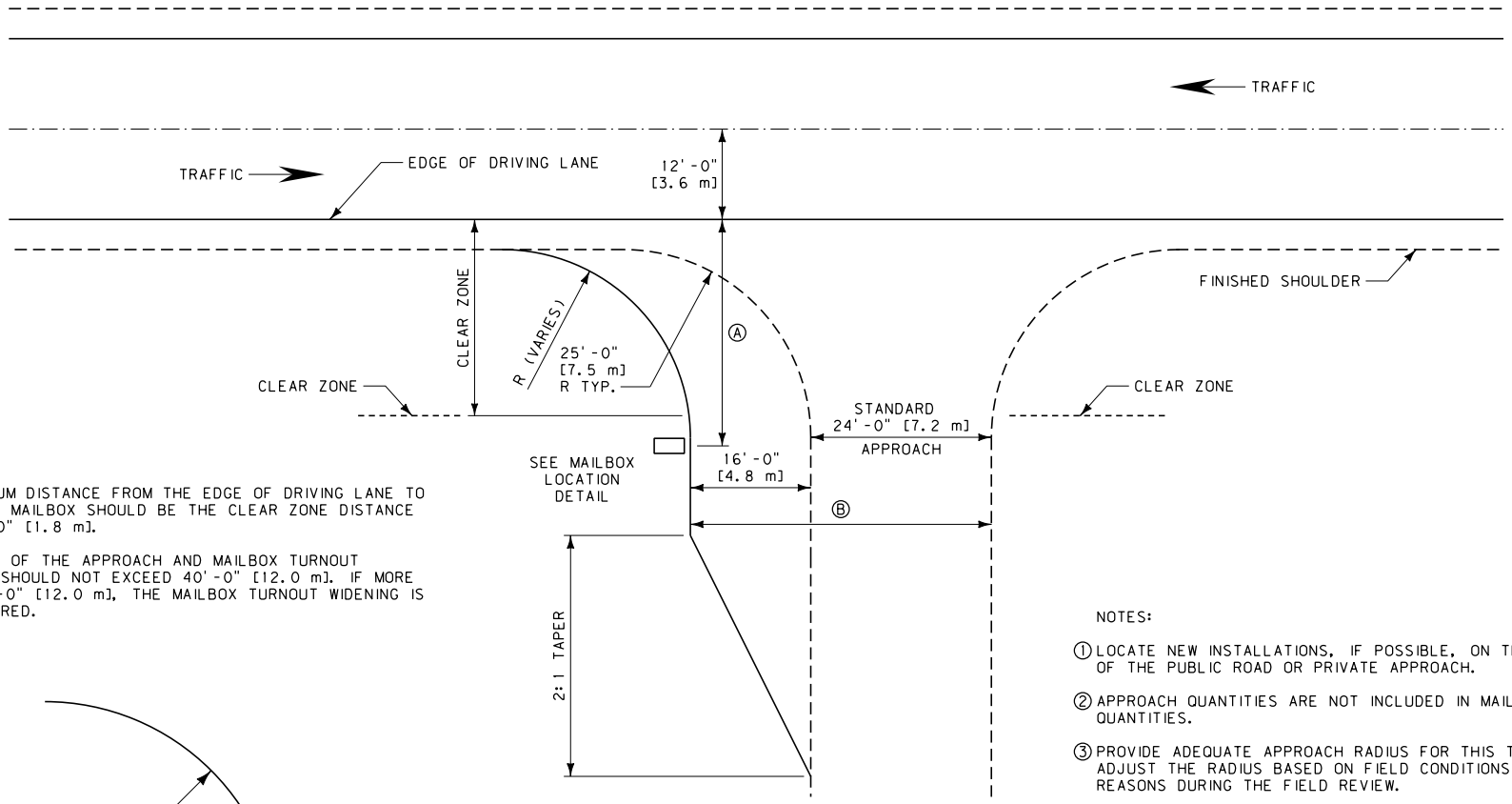

NOTES:

Ⓐ THE MINIMUM DISTANCE FROM THE EDGE OF DRIVING LANE TO THE FIRST MAILBOX SHOULD BE THE CLEAR ZONE DISTANCE PLUS 6'-0" [1.8 m].

Ⓑ THE WIDTH OF THE APPROACH AND MAILBOX TURNOUT COMBINED SHOULD NOT EXCEED 40'-0" [12.0 m]. IF MORE THAN 40'-0" [12.0 m], THE MAILBOX TURNOUT WIDENING IS NOT REQUIRED.

NOTES:

① LOCATE NEW INSTALLATIONS, IF POSSIBLE, ON THE RIGHT SIDE OF THE PUBLIC ROAD OR PRIVATE APPROACH.

② APPROACH QUANTITIES ARE NOT INCLUDED IN MAILBOX TURNOUT QUANTITIES.

③ PROVIDE ADEQUATE APPROACH RADIUS FOR THIS TURNOUT. ADJUST THE RADIUS BASED ON FIELD CONDITIONS AND DOCUMENT REASONS DURING THE FIELD REVIEW.

④ SEE DETAILED DRAWING NUMBER 203-05 FOR ADDITIONAL GUIDANCE.

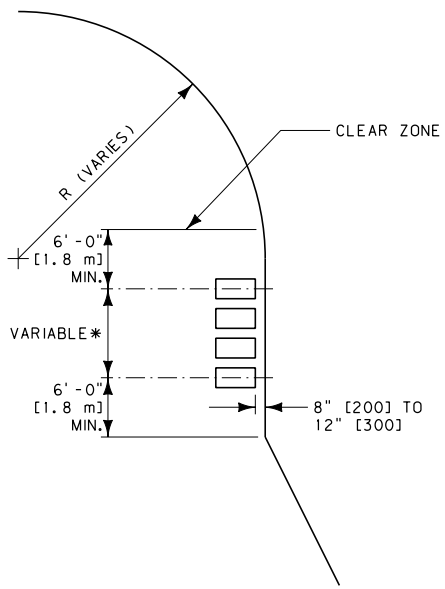

MAILBOX LOCATION DETAIL

NOTE:

* THE MINIMUM SPACING BETWEEN MAILBOXES IS EQUAL TO THREE-FOURTHS OF THEIR HEIGHT ABOVE THE GROUND. SEE DTL. DWG. NO. 623-20 AND 623-25 FOR MAILBOX DETAILS.

UNITS SHOWN IN BRACKETS [] ARE METRIC AND ARE IN MILLIMETERS (mm) UNLESS OTHER UNITS ARE SHOWN.

DETAILED DRAWING	
REFERENCE STANDARD SPEC. SECTION 623	DWG. NO. 623-10
APPROACH MAILBOX TURNOUT	
EFFECTIVE: SEPTEMBER 2014	

MDT MONTANA DEPARTMENT OF TRANSPORTATION

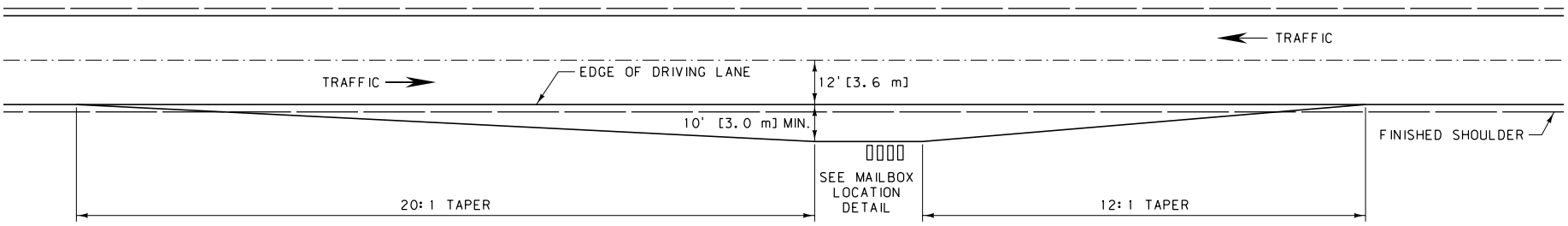

TURNOUT WITHOUT APPROACH

NOTE:
ACTUAL SIZE AND LOCATION TO BE DETERMINED BY THE PROJECT MANAGER.

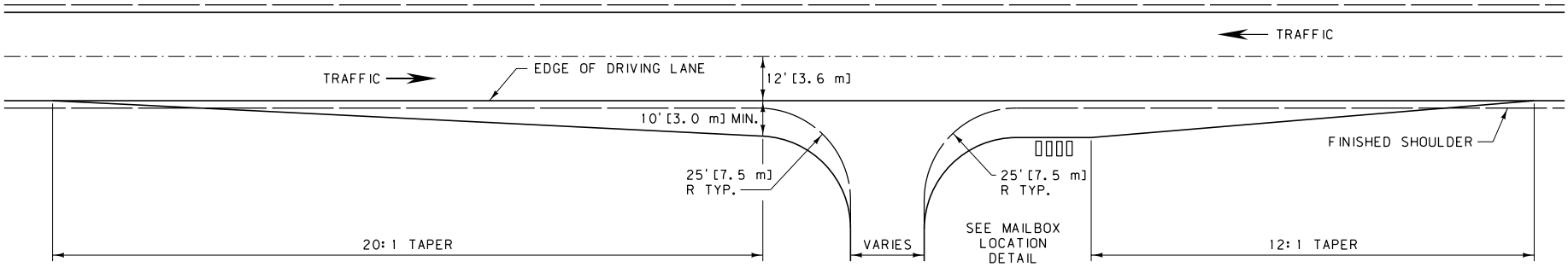

TURNOUT WITH APPROACH

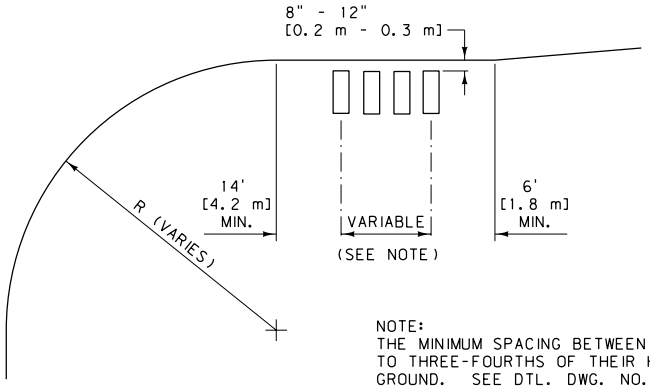

NOTE:
THE MINIMUM SPACING BETWEEN MAILBOXES IS EQUAL TO THREE-FOURTHS OF THEIR HEIGHT ABOVE THE GROUND. SEE DTL. DWG. NO. 623-20 AND 623-25 FOR MAILBOX DETAILS.

MAILBOX LOCATION DETAIL

NOTES:

1. LOCATE NEW INSTALLATIONS, IF POSSIBLE, ON THE FAR RIGHT SIDE OF AN INTERSECTION WITH A PUBLIC ROAD OR PRIVATE DRIVEWAY.
2. APPROACH QUANTITIES ARE NOT INCLUDED IN TURNOUT QUANTITIES.

UNITS SHOWN IN BRACKETS [] ARE METRIC AND ARE IN MILLIMETERS (mm) UNLESS OTHER UNITS ARE SHOWN.

DETAILED DRAWING	
REFERENCE STANDARD SPEC. SECTION 623	DWG. NO. 623-15
MAILBOX TURNOUT	
EFFECTIVE: SEPTEMBER 2014	

MDT MONTANA DEPARTMENT OF TRANSPORTATION

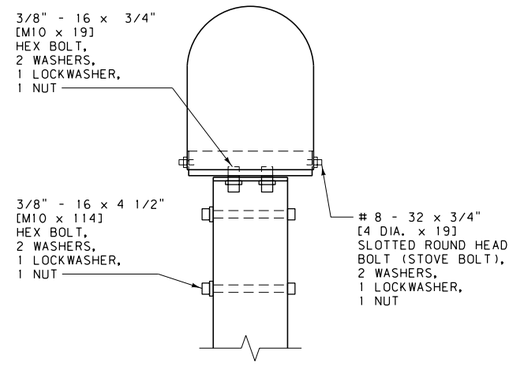

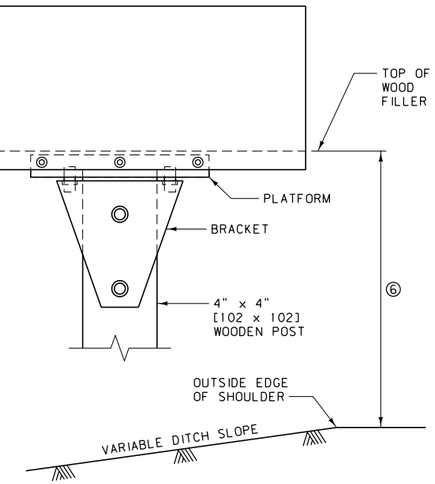

SINGLE MAILBOX ASSEMBLY③

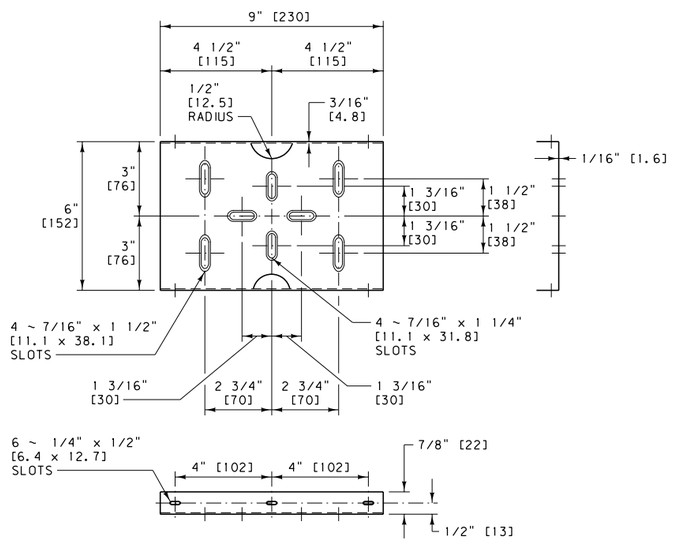

PLATFORM (STANDARD)

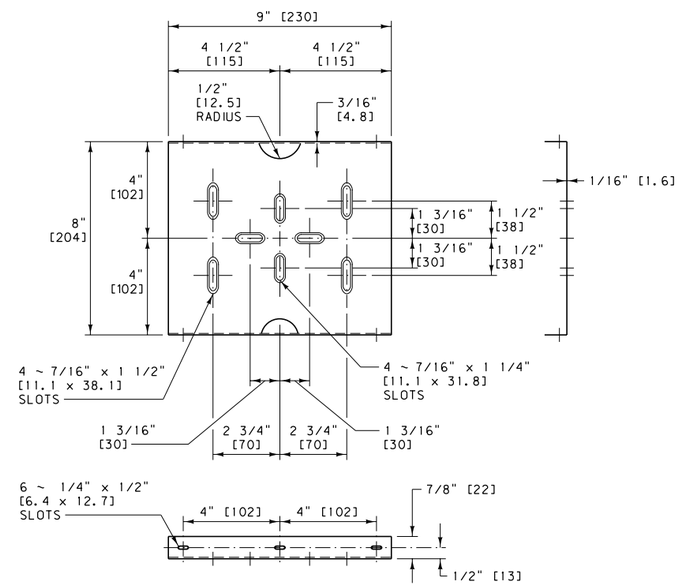

PLATFORM (LARGE)

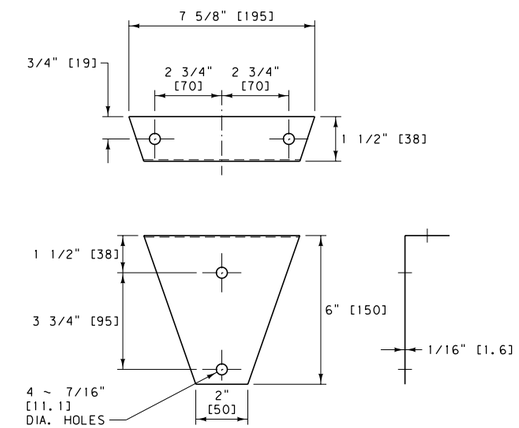

BRACKET

NOTES:

① GALVANIZE ALL MATERIALS MEETING SECTION 711.

② STAKE MAILBOX LOCATIONS BEFORE INSTALLATION FOR PROPER HEIGHT AND DISTANCE FROM THE ROADWAY. ONCE STAKED, NOTIFY THE PROJECT MANAGER AND THE POST OFFICE. THE PROJECT MANAGER AND POSTMASTER/MAILCARRIER ARE ALLOWED 48 HOURS TO REVIEW AND MODIFY THE STAKED LOCATIONS PRIOR TO FINAL INSTALLATION.

③ OTHER NCHRP 350 OR MASH CRASH TESTED MAILBOX SUPPORTS AND ASSEMBLIES MAY ALSO BE USED.

④ LOCATE THE MAILBOX 8" [0.2 m]TO 12" [0.3 m]OUTSIDE THE EDGE OF THE SHOULDER OR 6" [0.15 m]TO 12" [0.3 m]FROM THE FACE OF CURB.

⑤ FOR MULTIPLE MAILBOX INSTALLATIONS, SPACE THE MAILBOX SUPPORTS A MINIMUM DISTANCE OF 42" [1.05 m]APART.

⑥ FOR RURAL LOCATIONS USE A 38" TO 42" [965 TO 1065]MOUNTING HEIGHT. FOR URBAN LOCATIONS USE A 45" TO 48" [1145 TO 1220]MOUNTING HEIGHT.

⑦ SEE "A GUIDE TO MAILBOX SAFETY IN MONTANA" FOR ADDITIONAL INFORMATION.

UNITS SHOWN IN BRACKETS [] ARE METRIC AND ARE IN MILLIMETERS (mm) UNLESS OTHER UNITS ARE SHOWN.

DETAILED DRAWING	
REFERENCE STANDARD SPEC. SECTION 623 & 711	DWG. NO. 623-20
MAILBOX DETAIL	
EFFECTIVE: SEPTEMBER 2014	
MDT MONTANA DEPARTMENT OF TRANSPORTATION	

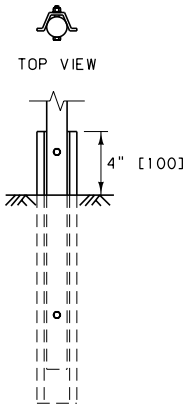

PIPE/POST CONNECTION

ROADWAY VIEW

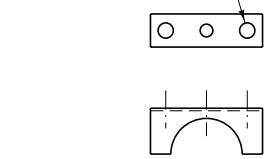

TAIL PIPE CLAMP

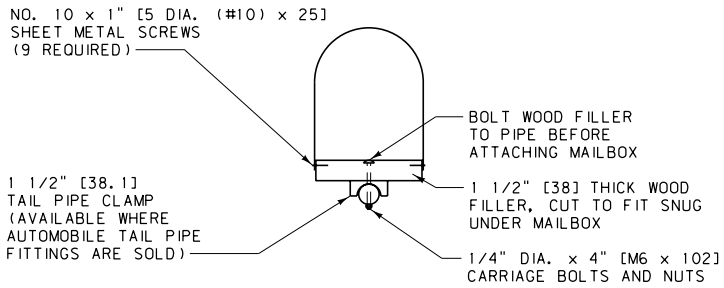

SECTION A-A

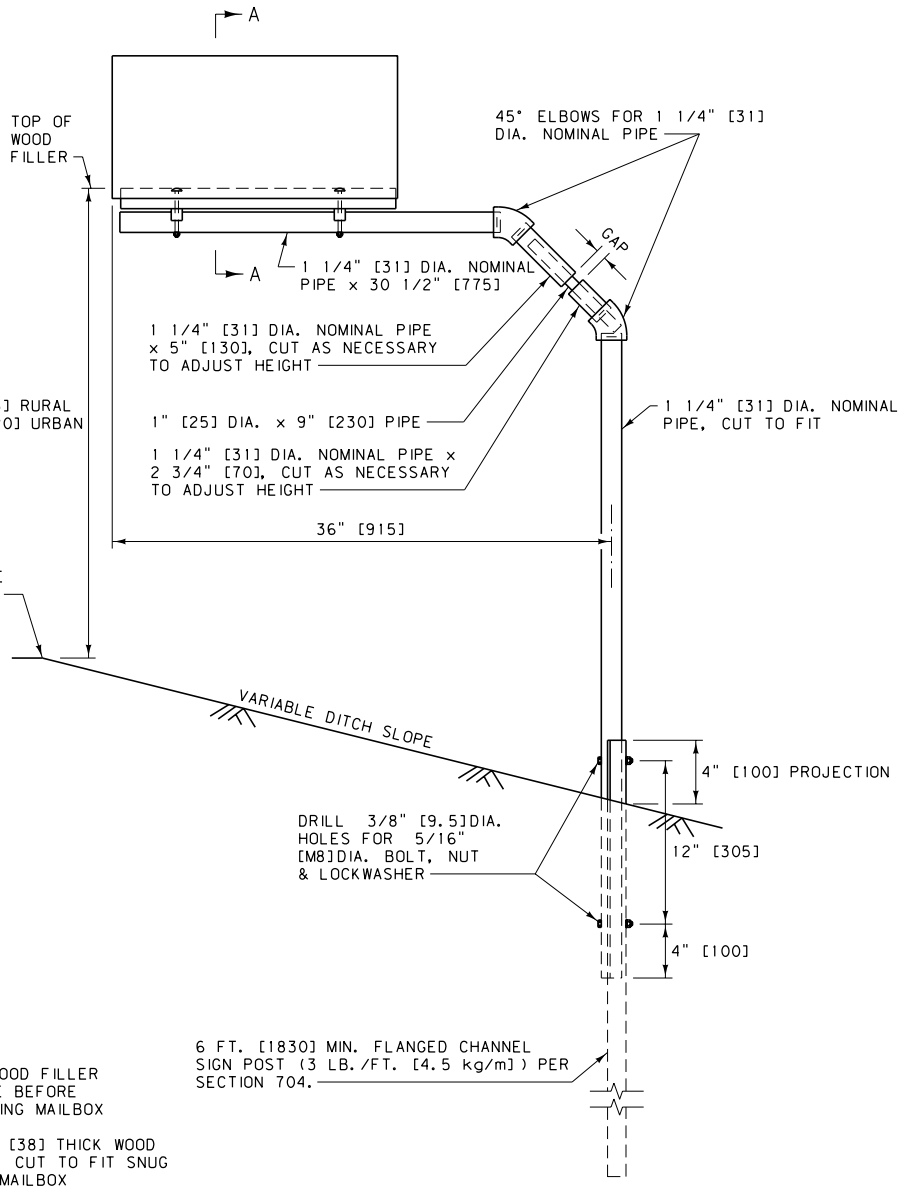

MAILBOX SUPPORT

STEEL PIPE WITH FITTINGS AND STEEL FENCE POST

NOTES:

1. GALVANIZE ALL MATERIALS MEETING SECTION 711.
2. STAKE MAILBOX LOCATIONS BEFORE INSTALLATION FOR PROPER HEIGHT AND DISTANCE FROM THE ROADWAY. ONCE STAKED, NOTIFY THE PROJECT MANAGER AND THE POST OFFICE. THE PROJECT MANAGER AND POSTMASTER/MAIL CARRIER ARE ALLOWED 48 HOURS TO REVIEW AND MODIFY THE STAKED LOCATIONS PRIOR TO FINAL INSTALLATION.
3. OTHER NCHRP 350 OR MASH CRASH TESTED MAILBOX SUPPORTS AND ASSEMBLIES MAY ALSO BE USED.
4. LOCATE THE MAILBOX 8" TO 12" [0.2 TO 0.3 METERS] OUTSIDE THE EDGE OF THE SHOULDER OR 6" TO 12" [0.15 TO 0.3 METERS] FROM THE FACE OF CURB.
5. SEE "A GUIDE TO MAILBOX SAFETY IN MONTANA", FOR ADDITIONAL INFORMATION.

UNITS SHOWN IN BRACKETS [] ARE METRIC AND ARE IN MILLIMETERS (mm) UNLESS OTHER UNITS ARE SHOWN.

DETAILED DRAWING	
REFERENCE STANDARD SPEC. SECTION 623, 704, AND 711	DWG. NO. 623-25
OPTIONAL MAILBOX DETAIL	
EFFECTIVE: SEPTEMBER 2014	
MDT MONTANA DEPARTMENT OF TRANSPORTATION	

ELEVATION VIEW

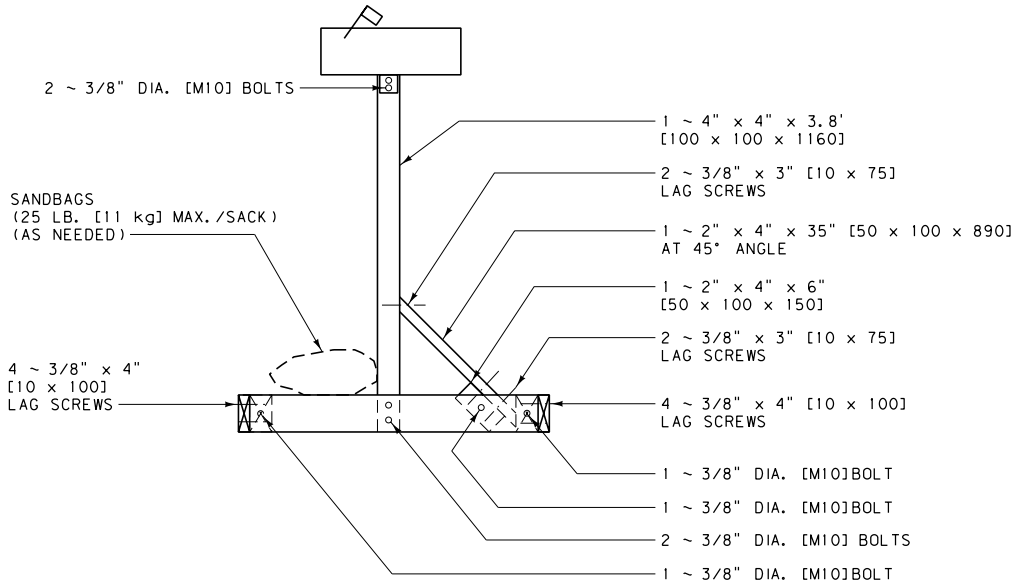

FRONT VIEW

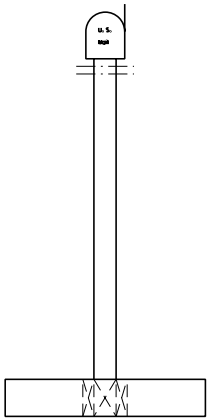

NOTES:

1. THIS MOUNTING DEVICE IS INTENDED FOR USE IN CONSTRUCTION ZONES.
2. BOLT PLACEMENT IS SYMMETRICAL THROUGHOUT MOUNTING BRACKET.
3. ALL BOLT CONNECTIONS ARE FINISHED WITH A WASHER AND NUT.
4. FOR THE POST USE EITHER DOUGLAS FIR OR HEM FIR, WHICH IS SURFACED FOUR SIDES (S4S) AND FREE OF HEART CENTER (FOHC).

PLAN VIEW

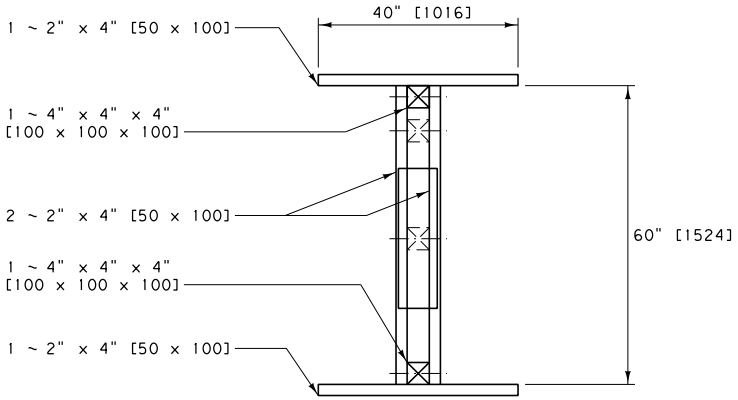

UNITS SHOWN IN BRACKETS [] ARE METRIC AND ARE IN MILLIMETERS (mm) UNLESS OTHER UNITS ARE SHOWN.

DETAILED DRAWING	
REFERENCE STANDARD SPEC. SECTION 623	DWG. NO. 623-30
TEMPORARY MAILBOX SUPPORT	
EFFECTIVE: SEPTEMBER 2014	

MDT MONTANA DEPARTMENT OF TRANSPORTATION

MOUNTING SYSTEM

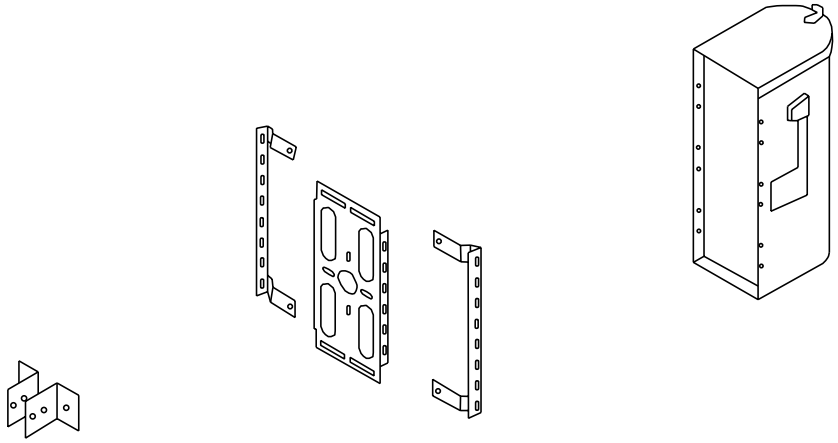

NOTES:

1. THIS MOUNTING DEVICE IS INTENDED FOR USE IN CONSTRUCTION ZONES.
2. BOLT PLACEMENT IS SYMMETRICAL THROUGHOUT MOUNTING BRACKET.
3. ALL BOLT CONNECTIONS ARE FINISHED WITH A WASHER AND NUT.

ATTACHMENT DETAILS

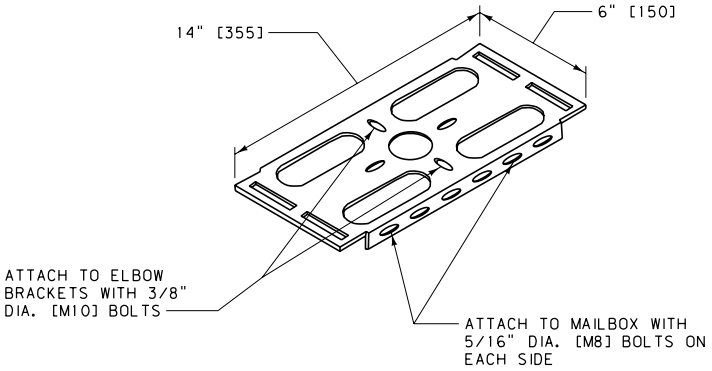

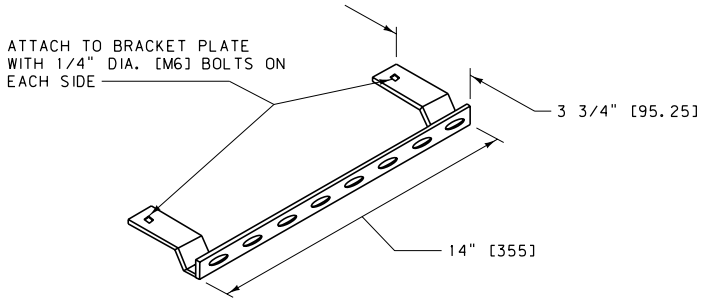

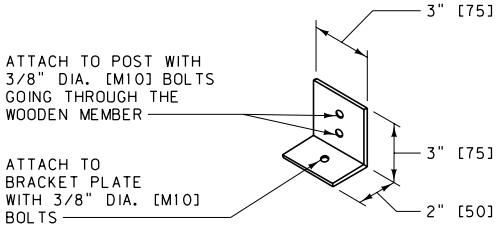

UNITS SHOWN IN BRACKETS [] ARE METRIC AND ARE IN MILLIMETERS (mm) UNLESS OTHER UNITS ARE SHOWN.

DETAILED DRAWING	
REFERENCE STANDARD SPEC. SECTION 623	DWG. NO. 623-35
TEMPORARY MAILBOX SUPPORT BRACKET DETAILS	
EFFECTIVE: SEPTEMBER 2014	

MDT MONTANA DEPARTMENT OF TRANSPORTATION

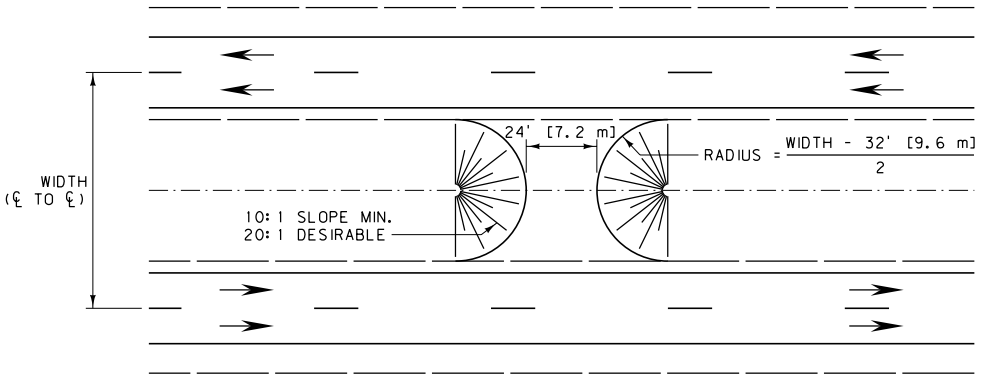

PLAN

(INTERSTATE LAYOUT SHOWN)

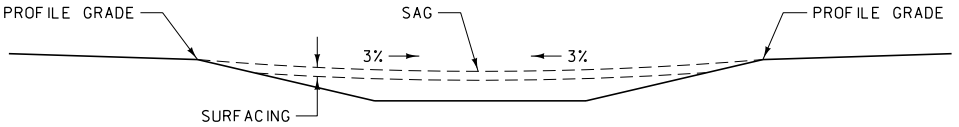

PROFILE

MEDIAN WIDTHS 36' [10.8 m] TO 76' [22.8 m]

LOCATE AND CONSTRUCT TURNOUTS ABOVE IN CONJUNCTION WITH DITCH BLOCKS IF AT ALL POSSIBLE. PROVIDE DRAINAGE WHEN NECESSARY.

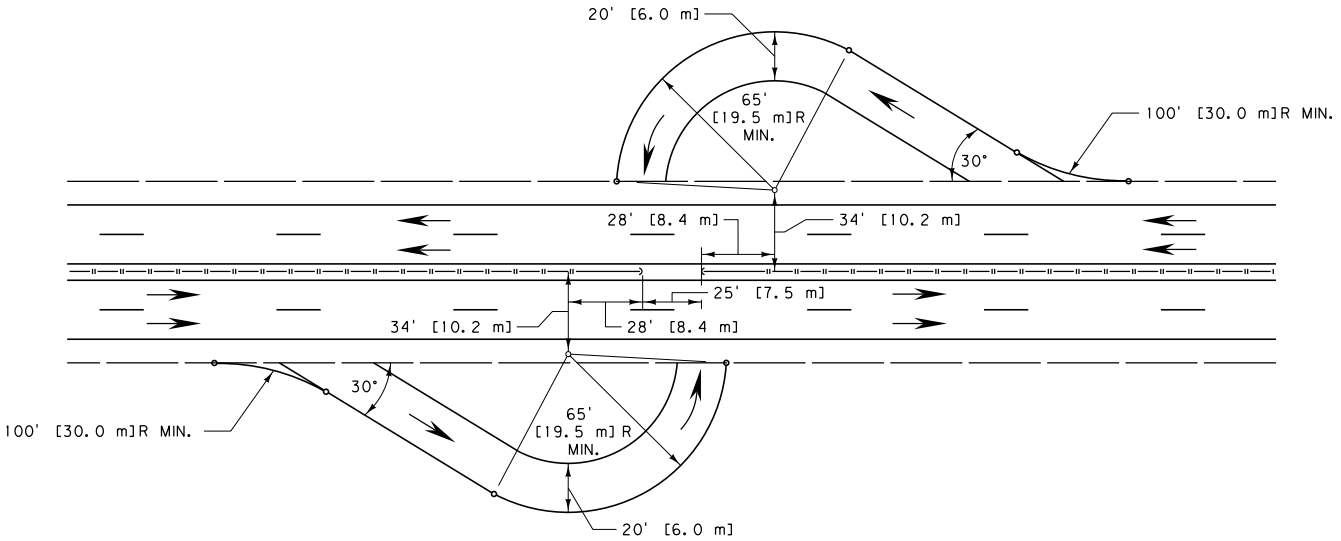

STANDARD U-TURN FOR NARROW MEDIANS

UNITS SHOWN IN BRACKETS [] ARE METRIC AND ARE IN MILLIMETERS (mm) UNLESS OTHER UNITS ARE SHOWN.

NOTES:

1. NARROW MEDIANS, MEDIAN WIDTHS GREATER THAN 76' [22.8 m] AND INDEPENDENT ROADWAYS REQUIRE SPECIAL DESIGN.
2. GRADES: UNIFORM BETWEEN INSIDE SHOULDERS OF MAIN TRAVELED WAY EXCEPT FOR SPECIAL DESIGN.
3. SURFACING: SEE PLANS FOR QUANTITIES.
4. DRAINAGE: USE 18" [450] OR 24" [600] CULVERTS IF REQUIRED.

DETAILED DRAWING	
REFERENCE STANDARD SPEC. SECTION	DWG. NO. 900-00
U-TURN MEDIAN OPENINGS ON CONTROLLED ACCESS HIGHWAYS	
EFFECTIVE: SEPTEMBER 2014	
MDT MONTANA DEPARTMENT OF TRANSPORTATION	

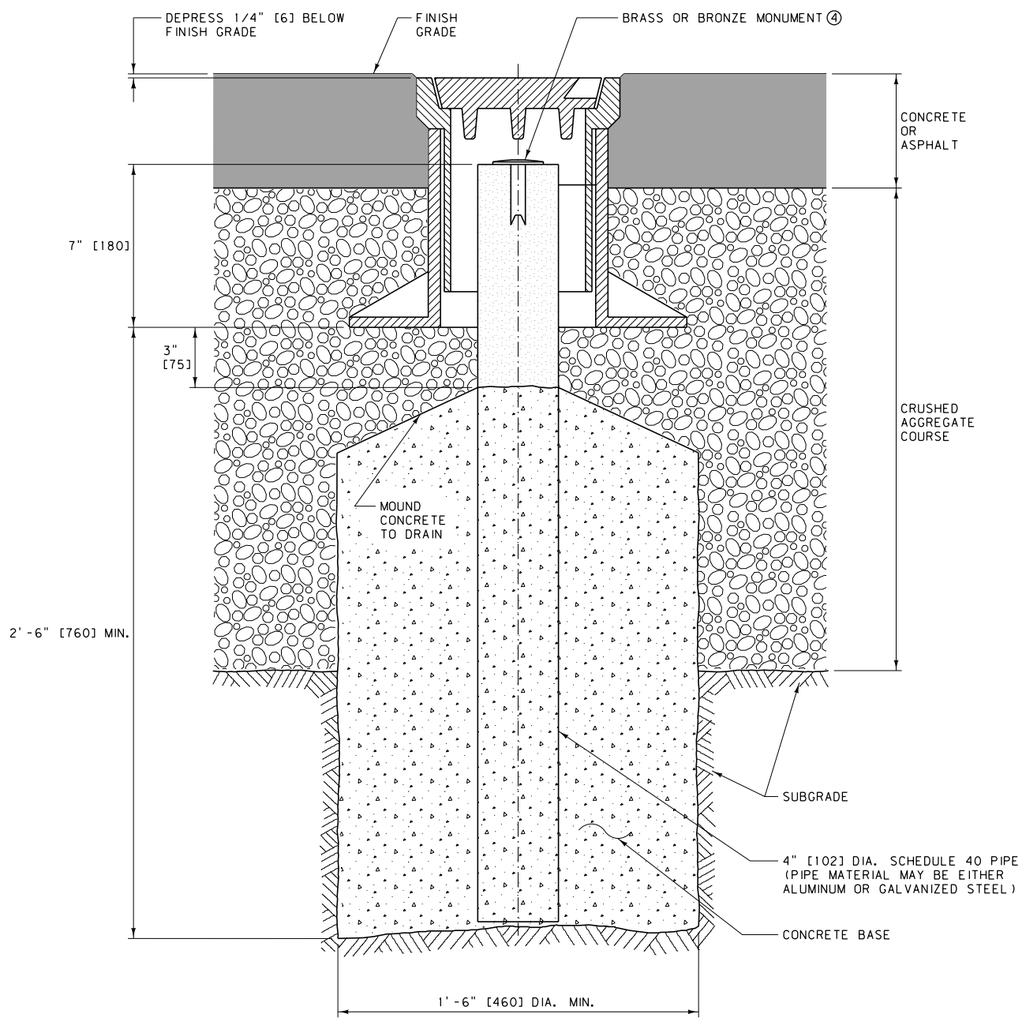

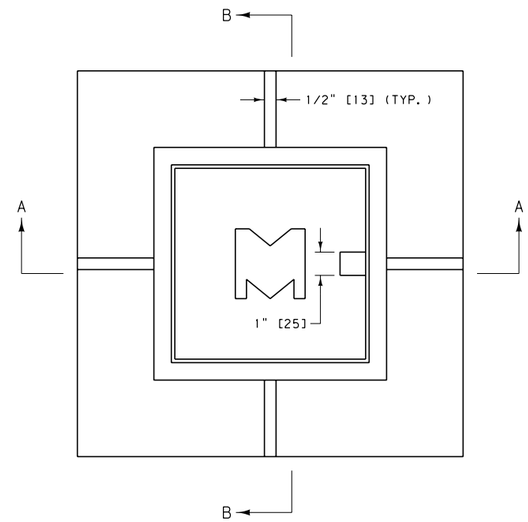

PLAN

NEENAH FOUNDRY R-1968 TYPE 36-B ADJUSTABLE MONUMENT BOX (HEAVY DUTY) OR APPROVED EQUAL

NOTES:

① INSTALL THE 4" [102]DIA. PIPE, CONCRETE BASE AND ADJUSTABLE MONUMENT BOX AS DETAILED. PLACE CONCRETE IN THE PIPE UP TO 10" [255]BELOW THE TOP OF THE PIPE (DO NOT FILL COMPLETELY.)

② POSITION THE CENTER OF THE PIPE TO WITHIN 1/2" [13]HORIZONTALLY OF THE DESIRED COORDINATES AND CENTER THE MONUMENT BOX OVER THE PIPE.

③ DEPENDING ON CONTRACT REQUIREMENTS, EITHER MDT FORCES UNDER THE DIRECTION OF A MONTANA PROFESSIONAL LAND SURVEYOR OR CONTRACTOR FORCES UNDER THE DIRECTION OF A MONTANA PROFESSIONAL LAND SURVEYOR WILL BE REQUIRED TO SET AND MARK THE BRASS OR BRONZE MONUMENT WITHIN THE BOX AFTER CONSTRUCTION. THE MONTANA PROFESSIONAL LAND SURVEYOR WILL BE REQUIRED TO PREPARE AND FILE CORNER RECORDATIONS IN ACCORDANCE WITH STATE STATUTES, ADMINISTRATIVE RULES OF MONTANA AND PROVISIONS OF THE MDT SURVEY MANUAL. PROVIDE COPIES OF FILED CORNER RECORDATIONS TO THE PROJECT MANAGER.

④ AN ACCEPTABLE BRONZE MONUMENT IS THE "BERNTSEN C25DB" OR APPROVED EQUAL. AN ACCEPTABLE BRASS MONUMENT IS THE "SURV-KAP M/M-BCS-2 1/2 D" OR APPROVED EQUAL.

⑤ USE CLASS GENERAL CONCRETE OR APPROVED EQUAL.

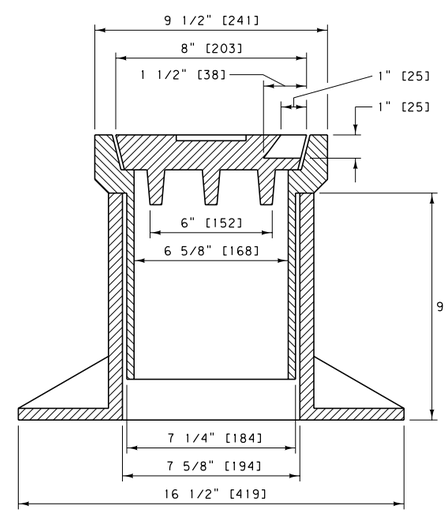

SECTION A-A

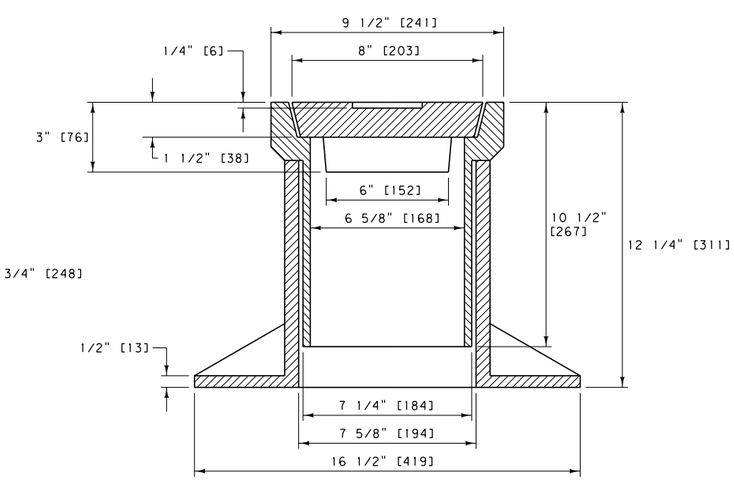

SECTION B-B

UNITS SHOWN IN BRACKETS [] ARE METRIC AND ARE IN MILLIMETERS (mm) UNLESS OTHER UNITS ARE SHOWN.

DETAILED DRAWING	
REFERENCE STANDARD SPEC. SECTION	DWG. NO. 900-15
ADJUSTABLE MONUMENT BOX	
EFFECTIVE: SEPTEMBER 2014	
MDT MONTANA DEPARTMENT OF TRANSPORTATION	