COMMON BRIDGE DETAILS AND NOTES GUIDE

MONTANA DEPARTMENT OF TRANSPORTATION

\\MDTHQ\MDTSHARES\HELENA\CADDSTD\WORKGROUP\BRSTD\DOCUMENTATION\CBD&N GUIDE.PDF

ISSUED *5/1/2017*

INDEX OF COMMON BRIDGE DETAILS AND NOTES GUIDE

PREFACE ---------- 5-1-17

GETTING STARTED

STRUCTURES MANUAL CHANGES ---------- 5-1-17

DETAILING HELPFUL TIPS ---------- 5-1-17

COMMON NOTES AND DETAILS

SUBSTRUCTURE

NOTES SHEET – 1

FOOTING PLAN SHEET NOTES ---------- 5-1-17

FOOTING PLAN DETAIL NOTES ---------- 5-1-17

FOOTING PLAN ADDITIONAL CALL OUTS & NOTES TO CONSIDER ---------- EXAMPLE

END BENT & INTERMEDIATE BENT SHEET NOTES ---------- 5-1-17

DETAILS SHEET -1

METAL EXPANSION CAP DETAIL ---------- 5-1-17

WATERSTOP DETAIL ---------- 5-1-17

HOOP MANUAL DIRECT BUTT JOINT DETAILS ---------- 5-1-17

SPIRAL LAP DETAIL ---------- 5-1-17

NOSE ANGLE DETAIL ---------- 5-1-17

TIE BAR DETAIL ---------- 5-1-17

ANCHOR BOLT DETAIL ---------- 5-1-17

SUPERSTRUCTURE

NOTES SHEET – 1

GENERAL LAYOUT SHEET NOTES ---------- 5-1-17

GENERAL LAYOUT DETAIL NOTES ---------- 5-1-17

GENERAL LAYOUT ADDITIONAL CALL OUTS & NOTES TO CONSIDER ---------- EXAMPLE

NOTES SHEET – 2

STRUCTURAL STEEL GIRDER SHEET NOTES ---------- 5-1-17

SLAB & BEARING SHEET NOTES ---------- 5-1-17

BULB-TEE DIAPHRAGM SHEET NOTES ---------- 5-1-17

BULB-TEE ERECTION PLAN NOTES ---------- 5-1-17

DETAILS SHEET – 1

SUPERELEVATION TRANSITION DETAIL ---------- 5-1-17

PROFILE GRADE DETAIL ---------- EXAMPLE

JOINT SEALANT DETAIL ---------- 5-1-17

STEEL EDGE MEMBER AND ANCHORAGE SYSTEM ---------- 5-1-17

SLAB CONSTRUCTION JOINT ---------- 5-1-17

SHEAR STUD DETAIL ---------- EXAMPLE

GUARD ANGLE DETAIL ---------- 5-1-17

TYPICAL FLANGE SPLICE ---------- 5-1-17

FLANGE TO WEB WELDING ---------- 5-1-17

FLANGE AND WEB SHOP SPLICE REQUIREMENTS ---------- 5-1-17

DETAILS SHEET – 2

SLAB POURING SEQUENCE ---------- EXAMPLE

BARRIER END DETAILS ---------- 5-1-17

T101 RAIL POST ANCHOR BOLT ASSEMBLY REINFORCEMENT ---------- 5-1-17

BARRIER RAIL REINFORCEMENT ---------- 5-1-17

CURB REINFORCEMENT ---------- 5-1-17

DIAPHRAGM DETAILS ---------- 5-1-17

BULB-TEE BEAM END DETAIL ---------- 5-1-17

BULB-TEE SECTION A ---------- 5-1-17

DETAILS SHEET – 3

DRAIN DETAILS ---------- 5-1-17

GIRDER ELEVATION ---------- EXAMPLE

REHABILITATION

NOTES SHEET – 1

REHAB SHEET NOTES ---------- 5-1-17

DETAILS SHEET -1

OVERLAY TREATMENT AT CURB OPENINGS AND DECK DRAINS ---------- EXAMPLE

OVERLAY TREATMENT AT DECK DRAINS ---------- EXAMPLE

CURB MOUNTED BARRIER DETAIL ---------- EXAMPLE

BRIDGE DECK REPAIR AND OVERLAY DEFINITION ---------- 5-1-17

GUARD ANGLE REMOVAL DETAIL ---------- 5-1-17

STANDARD DRAWINGS

PRESTRESSED CONCRETE BEAMS

COMMON PRESTRESSED CONCRETE GIRDER TYPE, SIZE & SPAN – SHEET 1 (FORTERRA)---------4-25-17

COMMON PRESTRESSED CONCRETE GIRDER TYPE, SIZE & SPAN – SHEET 2 (OLDCASTLE)--------4-25-17

TYPE 1 ----------2-25-15

TYPE MT-28 ----------2-26-15

TYPE A ----------2-25-16

TYPE 4 ----------2-25-16

TYPE M-72 ----------2-25-15

TYPE MTS ----------5-20-14

TYPE BULB-TEE _ PRELIMINARY ---------- DRAFT

TYPE TRI-DECK _ PRELIMINARY ---------- DRAFT

TYPE VOIDED SLAB - PRELIMINARY ---------- DRAFT

SLABS

SL-5----------3-15-17

SL-6----------3-15-17

SL-7----------3-15-17

SL-8----------3-15-17

RAILS

T101----------3-15-17

W740 ----------3-15-17

W830 ----------3-15-17

W740 & W830 TERMINATION DETAILS ----------1-19-16

BARRIER----------3-15-17

PEDESTRIAN RAIL----------3-15-17

HAND RAIL ----------3-15-17

DRILLED FOUNDATION ANCHOR POST _ PRELIMINARY ---------- DRAFT

TIMBER BRIDGE RAIL REVISION _ PRELIMINARY---------- DRAFT

OTHER

STATIC LOAD TEST FRAME FIELD SETUP ---------- 3-5-14

PILE SPLICE DETAILS & TIPS ----------1-30-15

BRIDGE TABLES

SHEET – 1

QUANTITIES TABLE NEW ---------- 5-1-17

QUANTITIES TABLE REHAB MAJOR---------- 5-1-17

QUANTITIES TABLE REHAB MINOR---------- 5-1-17

SHEET – 2

BULB – TEE DIMENSIONS ---------- 5-1-17

COORDINATE TABLE FOOTING ---------- 5-1-17

COORDINATE TABLE GRADING---------- 5-1-17

CURVE DATA ---------- 5-1-17

DEAD LOAD DEFLECTION 1---------- 5-1-17

DEAD LOAD DEFLECTION 2---------- 5-1-17

DESIGN PARAMETERS PRESTRESS ---------- 5-1-17

DESIGN PILE INFORMATION ---------- 5-1-17

DESIGN DS INFORMATION ---------- 5-1-17

EXPANSION GAPS ---------- 5-1-17

EXPANSION GAPS WITH ADJUSTMENT ---------- 5-1-17

HYDRAULIC BASE FLOOD ---------- 5-1-17

HYDRAULIC CANAL ---------- 5-1-17

HYDRAULIC DESIGN FLOOD ---------- 5-1-17

SHOE FIXED ADJUSTMENTS ---------- 5-1-17

SHOE MOVEMENTS ---------- 5-1-17

SHOE MOVEMENTS WITH ADJUSTMENT ---------- 5-1-17

TABLE OF ELEVATIONS ---------- 5-1-17

SHEET – 3

BEARING DESIGN ---------- 5-1-17

CAMBER TABLE ---------- 5-1-17

DESIGN INFO STEEL ---------- 5-1-17

FIELD SPLICE PLATES ---------- 5-1-17

GIRDER DATA ---------- 5-1-17

GIRDER THROW ---------- 5-1-17

STRINGLINE SLOPE ---------- 5-1-17

SHEET – 4

ABBREVIATIONS ---------- 5-1-17

BAR MARKS LOCATION ---------- 5-1-17

BARRIER LENGTHS ---------- 5-1-17

DECK CONDITIONS SURVEY SUMMARY ---------- 5-1-17

POST TENSION TENDONS ---------- 5-1-17

REBAR LAP LENGTHS ---------- 5-1-17

REMOVAL & OVERLAY DEPTHS ---------- 5-1-17

WORK SUMMARY ---------- 5-1-17

MISCELLANEOUS DETAILS

STANDARD REBAR BENDS AND HOOKS ---------- 5-1-17

STANDARD REBAR SHAPE CELLS – SHEET 1 ---------- 5-1-17

STANDARD REBAR SHAPE CELLS – SHEET 2 ---------- 5-1-17

OLD STANDARD BRIDGE RAILS ---------- 5-1-17

STANDARD BRIDGE BORDER – QSHEET ---------- 9-9-16

STANDARD BRIDGE BORDER – QSHEET CNST ---------- 9-9-16

STANDARD BRIDGE BORDER ---------- 9-9-16

SAMPLE DRAWINGS

Q – SHEET ---------- 5-1-17

GENERAL LAYOUT ---------- 5-1-17

FOOTING PLAN ---------- 5-1-17

END BENT ---------- 5-1-17

END BENT DETAILS ---------- 5-1-17

INTERMEDIATE BENT ---------- 5-1-17

ERECTION PLAN ---------- 5-1-17

SLAB DETAILS ---------- 5-1-17

3D PDF

TYPICAL STUB ABUTMENT ---------- 5-1-17

TYPICAL PILE SUPPORTED INTERMEDIATE BENT ---------- 5-1-17

FOOTNOTES

COMMON NOTES & DETAILS ---------- 5-1-17

SAMPLE DRAWINGS ---------- 5-1-17

GUIDES

BRIDGE BORING LOG DRAFTING PROCEDURE ----------9-12-16

BRIDGE REFERENCE POINT LOCATION PROCEDURE ----------9-14-16

INSERT BRIDGE COMMON DETAILS----------3-15-17

DETAIL BRIDGE PLANS IN SINGLE FILE----------3-15-17

COMMON BRIDGE DETAILS AND NOTES REVISIONS

REVISIONS

Issued 5-1-17

PREFACE

PREFACE

The Common Bridge Details and Notes Guide is intended to be the primary source of information on current detailing practices of the Montana Department of Transportation's (MDT) Bridge Bureau. The guide provides helpful hints, expected details, and updated processes in assembling bridge plans for MDT and consultant personnel preparing contract plans for MDT projects. For uniformity and consistency of the final plan set, the methods and practices shown or stated in this guide should be followed when practicable.

The use of this guide does not relieve the designer or engineer of their responsibility to consider the applicability of the detail or notes to their situation, nor should it act as a restriction or inhibitor to new ideas. Although Bridge Bureau policy and detailing practice is presented here for numerous situations, content of the guide is not intended to be exhaustive. Therefore, use of this guide must be tempered with sound engineering judgment.

REVISIONS

The electronic release of this new guide is March, 2017. Portions of the guide may periodically be revised to incorporate changes in detailing or design methods. These changes may be based on construction practice, AASHTO code revisions or materials. When changes are made, the watermark date stamp will reflect the change date and a description of the change will be annotated in the revision section of the guide. It is incumbent on the user to verify that they are referencing the most current version of the guide.

GETTING STARTED

STRUCTURES MANUAL CHANGES

DETAILING HELPFUL TIPS

GETTING STARTED

STRUCTURES MANUAL CHANGES

1. Rescind 5.4.1.3.2. Place the pay items in the quantities table in the sequential order of the bid item numbers. Show the bridge length in the first column.

GETTING STARTED

DETAILING HELPFUL TIPS

1. Footnotes shown on the Sample Drawings and Common Notes and Details are for reference only. These should not be place on the plan sheets.
2. When placing cells from the rebar shapes cell library, these should be placed at a scale of 0.09:1 when placed in a border drawn at a 1:1 Scale.
3. When placing rebar charts from the rebar charts cell library, these should be placed in the border at a scale of 1:10.
4. When placing "dots" representing reinforcing steel in a section view place them at 1/16" diameter for a 1:1 scale.
5. When placing rebar detail all bars with the correct bend radius as defined on the "Standard Rebar Bends and Hooks" sheet.
6. To place a "Check Mark" in an excel table.
    a. Set the font to "Wingdings" in the cell which requires the check mark.
    b. Use key combination: ALT + 0252
    c. Set the font size for the desired check mark size.

COMMON NOTES AND DETAILS

SUBSTRUCTURE

NOTES SHEET – 1

FOOTING PLAN SHEET NOTES

FOOTING PLAN DETAIL NOTES

FOOTING PLAN ADDITIONAL CALL OUTS & NOTES TO CONSIDER

END BENT & INTERMEDIATE BENT SHEET NOTES

DETAILS SHEET -1

METAL EXPANSION CAP DETAIL

WATERSTOP DETAIL

HOOP MANUAL DIRECT BUTT JOINT DETAILS

SPIRAL LAP DETAIL

NOSE ANGLE DETAIL

TIE BAR DETAIL

ANCHOR BOLT DETAIL

SUPERSTRUCTURE

NOTES SHEET – 1

GENERAL LAYOUT SHEET NOTES

GENERAL LAYOUT DETAIL NOTES

GENERAL LAYOUT ADDITIONAL CALL OUTS & NOTES TO CONSIDER

NOTES SHEET - 2

STRUCTURAL STEEL GIRDER SHEET NOTES

SLAB & BEARING SHEET NOTES

BULB-TEE DIAPHRAGM SHEET NOTES

BULB-TEE ERECTION PLAN NOTES

DETAILS SHEET - 1

SUPERELEVATION TRANSITION DETAIL

PROFILE GRADE DETAIL

JOINT SEALANT DETAIL

STEEL EDGE MEMBER AND ANCHORAGE SYSTEM

SLAB CONSTRUCTION JOINT

SHEAR STUD DETAIL

GUARD ANGLE DETAIL

TYPICAL FLANGE SPLICE

FLANGE TO WEB WELDING

FLANGE AND WEB SHOP SPLICE REQUIREMENTS

DETAILS SHEET - 2

SLAB POURING SEQUENCE

BARRIER END DETAILS

T101 RAIL POST ANCHOR BOLT ASSEMBLY REINFORCEMENT

BARRIER RAIL REINFORCEMENT

CURB REINFORCEMENT

DIAPHRAGM DETAILS

BULB-TEE BEAM END DETAIL

BULB-TEE SECTION A

DETAILS SHEET – 3

DRAIN DETAILS

GIRDER ELEVATION

REHABILITATION

NOTES SHEET - 1

REHAB SHEET NOTES

DETAILS SHEET -1

OVERLAY TREATMENT AT CURB OPENINGS AND DECK DRAINS

OVERLAY TREATMENT AT DECK DRAINS

CURB MOUNTED BARRIER DETAIL

BRIDGE DECK REPAIR AND OVERLAY DEFINITION

GUARD ANGLE REMOVAL DETAIL

FOOTING PLAN SHEET NOTES

NOTES

SOILS AND FOUNDATION MATERIALS: The Footing Plan shows points where the State of Montana, Department of Transportation or XXXXXXXXXXX,drilled boreholes.

The series of numbers on the Log of Borings shows the number of blows from a 140 pound hammer with a 30" drop required to drive a 2" split spoon sampler 6" (Standard Penetration Test). The length of the split spoon sampler is 18". The sampler length is measured as three 6" intervals. If the split spoon sampler did not penetrate 6" after 50 blows, the Log of Borings shows the measured penetration within that particular interval.

See the Special Provisions for original boring logs and additional subsurface information.

USE WITH PILE FOUNDATIONS

NOTE: Contact the MDT Geotechnical Section at (406)444-6281 if pile tip elevations deviate more than 1 foot from the elevation indicated.

USE WHEN A DYNAMIC LOAD TEST IS REQUIRED AND GEOTECH SPECIFIES A RE-DRIVE TIME FRAME

NOTE: If the project manager requires a re-drive of the test pile, re-drive the pile not less than XX hours or more than XX hours after initial driving.

CELL: FOOTING PLAN
REVISED: 5/1/17

FOOTING PLAN ADDITIONAL CALL OUTS & NOTES TO CONSIDER

TYPICAL CALL OUTS - PLAN VIEW

℄ Roadway and
℄ Structure

Sta. 00+00.00
(for skewed bridges)
(call out at ℄ Rdwy & ℄ Bent or Brg.)

Show dashed lines of existing bridge piles or foundation

Alignment Tangent Bearing N X°XX'XX" E
or Long Chord Bearing N X°XX'XX" E

Show offset dimension from Long Chord to ℄ Roadway at ℄ Bent

℄ Brg. at Bent No. X

℄ Bent No. X

North Arrow

Skew angle (between the perpendicular line to the design centerline or long chord on curved bridge, and the centerline of one of the bents

xx X xx Dynamic Load Test or xx X xx Static Load Test

Call out Borehole locations

Dimension span lengths and overall length with meter symbol in dimension

Location of unsuitable materials

Phase locations

FOOTING PLAN DETAIL NOTES

CELL: FP FOOTING PLAN NOTES
REVISED: 5/1/17

NOTE: Existing substructure locations are approximate. Verify locations.

NOTE: Dimensions shown for Bent No. X are typical for Bent No. X .

END BENT & INTERMEDIATE BENT SHEET NOTES

NOTE: Include all costs associated with furnishing and placing the expansion joint filler, tarpaper and neoprene waterstop in the unit price bid for Concrete Class Structure.

NOTE: Securely nail expansion joint filler to pile cap concrete and hold in proper position while placing backwall concrete.

NOTE: N.F. denotes near face.
F.F. denotes fill face.

NOTE: Lap #4 bars 2-0 minimum.
Lap #5 bars 2-6 minimum.
Lap #6 bars 3-0 minimum.
Lap #5E bars 3-0 minimum.

NOTE: Slab and beam reinforcing steel is omitted for clarity. See Std. Dwg. No. SL-X, Std. Dwg. No. B-X, and Sheet BXX for details.

NOTE: Finish beam seats level to the elevations shown on this drawing. Slope areas between beam seats as shown.

NOTE: Ensure reinforcing steel does not interfere with anchor bolt placement.

USE WITH T101 RAIL ON BACKWALL

NOTE: Mount rail posts on end bents with ¾" Ø x 2-0 galvanized high tensile strength stud bolts (ASTM A 449) (2" of thread) embedded into the backwall. See General Layout Sheet B2 for additional rail post spacing.

USE WITH T101 RAIL ON BACKWALL WITH CORBEL

NOTE: Mount rail posts on end bents with ¾" Ø x 1-1½ galvanized high tensile strength stud bolts (ASTM A 449) (2" of thread) embedded into the backwall. Use Anchor Bolt Assembly for flat slab on Dwg. No. SBR-T101. See General Layout Sheet B2 for additional rail post spacing.

USE WITH T101 RAIL ON U-TYPE BENT

NOTE: Mount rail posts on wingwalls with ¾" Ø x 1-1½ galvanized high tensile strength stud bolts (ASTM A 449) (2" of thread) embedded into the wingwall. Use Anchor Bolt Assembly for flat slab on Dwg. No. SBR-T101. See General Layout Sheet B2 for additional rail post spacing.

USE WITH BULB"T" AND TRI-DECKS

NOTE: Use Concrete Class Structure for all concrete in backwall and cap.

USE WHEN SMOOTH BARS ARE NOT INCLUDED ON STANDARD BEAM DRAWING

NOTE: Use D1~XX" Ø smooth bars meeting the requirements of AASHTO M 270 Grade 36. Include all costs associated with furnishing and placing smooth bars in the unit price bid for Prestressed Concrete Beam.

SEAL CONCRETE FOR PIERS

NOTE: Concrete Class General will be permitted in the portion of the pier footing shown as seal. Place concrete in accordance with the requirements for Depositing Concrete Underwater as called for in the Standard Specifications. Include all resources necessary to complete the item in the unit price bid for Seal Concrete.

SPREAD FOOTING PRESSURE NOTE

NOTE: Maximum footing pressure under Service I: XXX ksf

CELL: END BENT INTERMEDIATE BENT
REVISED: 5/1/17

SUB NOTES SHEET - 1

APPLICABLE FOOTNOTES
1

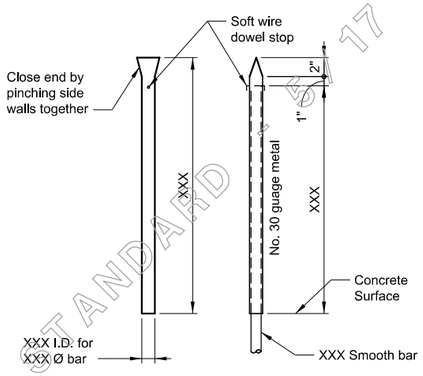

EXPANSION CAP DIMENSIONS						
BEAM	SPAN LENGTH	SMOOTH BAR DIAMETER	SMOOTH BAR LENGTH	EXPANSION CAP DIAMETER	OVERALL LENGTH	LENGTH TO PIN STOP
Type I & MT-28	0 - 40 ft	1"	2-8	1⅛"	1-3	1-0
	40 - 80 ft	1¼"	2-8	1⅜"	1-3	1-0
	80 - 120 ft	1½"	2-8	1⅝"	1-3	1-0
	greater than 120 ft	1¾"	2-8	1⅞"	1-3	1-0
Type A, IV & M-72	0 - 40 ft	1"	4-0	1⅛"	2-7	2-4
	40 - 80 ft	1¼"	4-0	1⅜"	2-7	2-4
	80 - 120 ft	1½"	4-0	1⅝"	2-7	2-4
	greater than 120 ft	1¾"	4-0	1⅞"	2-7	2-4

METAL EXPANSION CAP DETAIL
No Scale

SCALE: 1:4
REVISED: 5/1/17

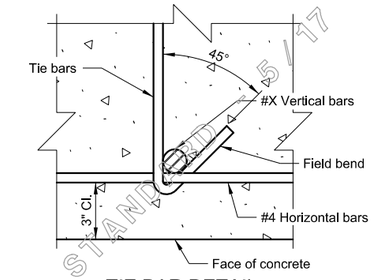

TIE BAR DETAIL
Scale ~ 3" = 1'-0"

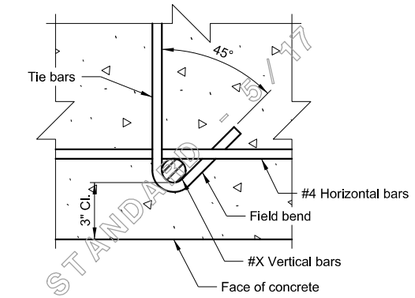

TIE BAR DETAIL
Scale ~ 3" = 1'-0"

SCALE: 1:4
REVISED: 5/1/17

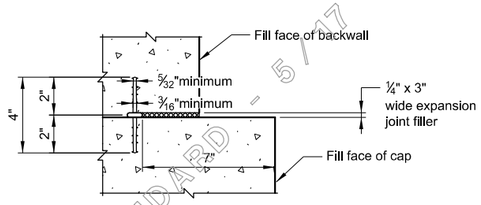

WATERSTOP DETAIL
No Scale

NOTE: Hold waterstop in accurate position while placing concrete.

SCALE: 1:4
REVISED: 5/1/17

NOTE: Use a certified welder to weld according to AWS D1.4.
Use filler material meeting the requirements of AWS A5.5

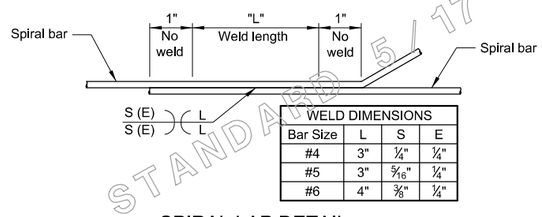

WELD DIMENSIONS			
Bar Size	L	S	E
#4	3"	¼"	¼"
#5	3"	5/16"	¼"
#6	4"	⅜"	¼"

SPIRAL LAP DETAIL
No Scale

SCALE: 1:12
REVISED: 5/1/17

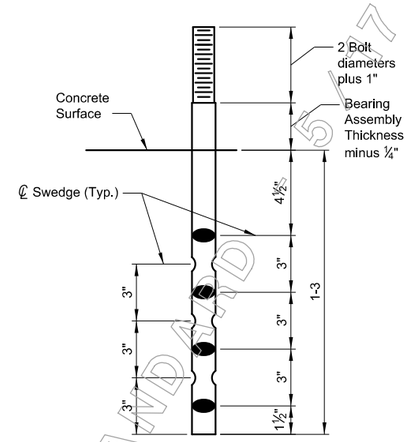

Make swedge deformations 3/16"deep minimum without removing metal.

ANCHOR BOLT DETAIL
No Scale

SCALE: 1:4
REVISED: 5/1/17

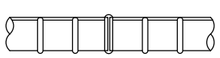

HOOP RESISTANCE BUTT JOINT DETAIL
No Scale

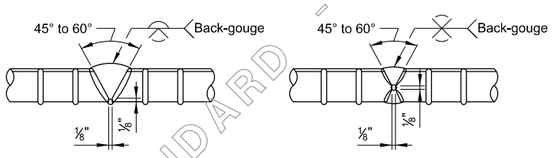

SINGLE V-GROOVE WELD
AWS D1.4 figure 3.2(A)

DOUBLE V-GROOVE WELD
AWS D1.4 figure 3.2(B)

HOOP MANUAL DIRECT BUTT JOINT DETAILS
No Scale
All backing shall be removed.

SCALE: 1:1
REVISED: 5/1/17

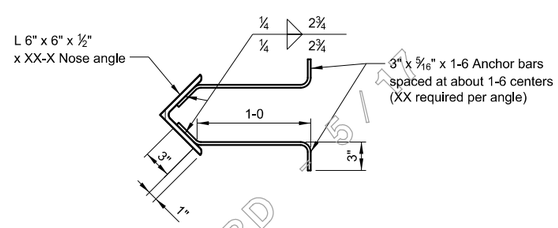

NOSE ANGLE DETAIL
Scale ~ 1½" = 1'-0"

NOTE: Include all costs associated with furnishing and installing the nose angle in the lump sum bid for Structural Steel.

NOTE: Place the nose angle flush with the face of pier.

NOTE: Use nose angle and anchor bars meeting the requirements of AASHTO M 270 Grade 36 and paint in accordance with the Standard Specifications.

NOTE: For information only, estimated weight of structural steel for each nose angle = 26.0 lb/ft.

SCALE: 1:8
REVISED: 5/1/17

SUB DETAILS SHEET - 1

GENERAL LAYOUT SHEET NOTES

NOTES

FINISHED GRADE: Finished grade of bridge at centerline roadway is the same as the Profile Grade shown on Road Plans.

LIVE LOAD: Standard HL-93 loading.

SPECIFICATIONS: Montana Department of Transportation and the Montana Transportation Commission Standard Specifications for Road and Bridge Construction, 2014 edition, and any amendments thereto, and the Special Provisions govern unless otherwise noted. The design was prepared in accordance with AASHTO LRFD Bridge Design Specifications, Seventh edition - 2014 with 2016 Interim revisions.

REINFORCING STEEL: Use new deformed type reinforcing steel meeting the requirements of AASHTO M 31 Grade 60. Include all costs associated with furnishing and placing new reinforcing steel in the unit price bid for either Reinforcing Steel or Reinforcing Steel - Epoxy Coated.

REINFORCING STEEL SUFFIX: The suffix E denotes epoxy coated reinforcing steel.

REINFORCING STEEL COVER: Unless specified otherwise on the drawings, the minimum concrete cover measured from the face of the concrete to the face of any reinforcing steel is 2" except as noted below:

Bottom of Slab	1"
Top of Slab	2½"
Bottom of Abutment Caps	3"
Concrete Barriers & Curbs	1½"

Concrete cover to any tie bar is ½" less than what is listed above.

CAST IN PLACE CONCRETE: Unless otherwise approved or specified, use Concrete Class Structure for all substructure concrete and Concrete Class Deck for all superstructure concrete.

CONCRETE STRENGTH: Use f'c = 4000 p.s.i. for Concrete Class Structure. Use f'c = 4000 p.s.i. for Concrete Class Deck.

STRUCTURE EXCAVATION: Include structure excavation in the unit price bid for Concrete Class Structure.

TRAFFIC CONTROL PLAN AND SEQUENCE OF OPERATIONS: See Special Provisions.

EXISTING STRUCTURE: Remove the existing structure (see Road Plan sheets and Special Provisions).

STATE PLANE COORDINATES: Stations shown on the bridge plans are state plane grid stations based on (NAD83-1992). Dimensions shown on the bridge plans are horizontal ground distances and not state plane grid distances. The combination scale factor (CSF) at this location is 0.00000000.

Horizontal ground distance x CSF = Grid Distance
Grid Distance/CSF = Distance to stake.

USE WITH CONSTANT SUPERELEVATION

FINISHED GRADE: Finished grade of bridge at centerline roadway is X.XX feet above the Profile Grade shown on Road Plans.

USE WITH SUPERELEVATION TRANSITION

FINISHED GRADE: Finished grade of bridge at centerline roadway is different from Profile Grade due to superelevation transition.

USE IF GRADE 36 STEEL SUCH AS GUARD ANGLES, NOSE ANGLES, ICE PLATES, STEEL DIAPHRAGMS AND SOLE PLATES ARE USED

STRUCTURAL STEEL: All structural steel will be measured and paid for on the lump sum basis as set forth in the Standard Specifications. Use structural steel meeting the requirements of AASHTO M 270 Grade 36. Estimated weight = XXX lbs.

USE IF GRADE 36 STEEL SUCH AS GUARD ANGLES, NOSE ANGLES, ICE PLATES, STEEL DIAPHRAGMS AND SOLE PLATES AND WEATHERING STEEL GRADE 50W ARE USED

STRUCTURAL STEEL: All structural steel will be measured and paid for on the lump sum basis as set forth in the Standard Specifications. Use structural steel meeting the requirements of AASHTO M 270 Grade 36: Estimated weight = XXX lbs. and AASHTO M 270 Grade 50W: Estimated weight = XXX XXX lbs.

USE WITH PIER SHAFTS (DS CONCRETE)

CAST IN PLACE CONCRETE: Except as noted on Sheet BXX use Concrete Class Structure for all substructure concrete and Concrete Class Deck for all superstructure concrete unless otherwise approved.

USE WITH DRILLED SHAFTS (CONCRETE CLASS STRUCTURE) (SAME AS STANDARD NOTE)

CAST IN PLACE CONCRETE: Unless otherwise approved or specified, use Concrete Class Structure for all substructure concrete and Concrete Class Deck for all superstructure concrete.

USE WITH BULB TEE OR TRI-DECK BEAMS

CAST IN PLACE CONCRETE: Unless otherwise approved or specified, use Concrete Class Structure for all substructure concrete.

USE WITH CONCRETE BARRIERS

CAST IN PLACE CONCRETE: Unless otherwise approved or specified, use Concrete Class Structure for all substructure concrete and Concrete Class Deck for all superstructure and barrier concrete.

USE WITH BULB TEE OR TRI-DECK BEAMS

CONCRETE STRENGTH: For structural design purposes only, use f'c = 4000 p.s.i. for Concrete Class Structure.

TYPE 1 STRUCTURE EXCAVATION IS NOW INCLUDED IN CONCRETE CLASS STRUCTURE UNIT PRICE BID- NO QUANTITY IS CALCULATED EXCEPT IN LARGE QUANTITY SITUATIONS WHICH WILL BE DETERMINED IN THE DESIGN PARAMETER MEETING - IF A QUANTITY IS GOING TO BE CALCULATED, USE THE FOLLOWING NOTES

USE WITH END BENTS IN A CUT SITUATION

STRUCTURE EXCAVATION: Structure Excavation will be calculated from the natural ground line as it exists before construction begins.

USE WITH END BENTS IN A FILL SITUATION

STRUCTURE EXCAVATION: Structure Excavation will be calculated from berm elevations.

USE WITH TURN BACK WINGS - IF EXISTING GROUND LINES ARE ABOVE TOP ELEVATION OF CAP (CUT)

STRUCTURE EXCAVATION: Structure excavation for the abutments will be calculated from the natural ground line as it exists before construction begins.

USE WITH TURN BACK WINGS - IF EXISTING GROUND LINES ARE BELOW BOTTOM OF CAP ELEVATION (FILL) (USE APPROXIMATE BERM ELEVATION)

STRUCTURE EXCAVATION: Structure excavation will be calculated from Elev. XXXX.XX at Bent No. X and Elev. XXXX.XX at Bent No. X.

USE WITH TYPE 2 STRUCTURE EXCAVATION (PIERS USING COFFERDAMS FOR CONSTRUCTION) (MODIFY END BENT PORTION IF REQUIRED)(TYPE 2 EXC.)

STRUCTURE EXCAVATION: Include structure excavation in the unit price bid for Concrete Class Structure at end bents. Structure excavation at piers will be calculated from natural ground lines as they exist prior to construction.

INCLUDE THIS NOTE IF SEALS ARE USED

SEAL DEPTH: The seal depth has been sized to resist hydrostatic uplift forces produced by a water surface elevation of XXXX.XX If higher elevations are encountered, consult the Engineer for any modifications required to the seal.

USE WHEN THERE IS CORROSION RESISTANT REBAR

CORROSION RESISTANT REINFORCING STEEL: Use new deformed type reinforcing steel meeting the requirements of ASTM A1035 Grade 100 or ASTM A955 UNS Designation: S24100 as specified. Include all costs associated with furnishing and placing new corrosion resistant reinforcing steel in the unit price bid for Reinforcing Steel - Corrosion Resistant.

USE WHEN THERE IS A706 (SEISMIC REBAR)

REINFORCING STEEL: Use new deformed type reinforcing steel meeting the requirements of AASHTO M 31 Grade 60 or ASTM Specification A 706 Grade 60 as specified. Include all costs associated with furnishing and placing new reinforcing steel in the unit price bid for either Reinforcing Steel, Reinforcing Steel - Epoxy or Reinforcing Steel - Seismic.

USE WHEN THERE ARE ADDITONAL REBAR SUFFIXES

REINFORCING STEEL SUFFIX:
The suffix CR denotes corrosion resistant reinforcing steel.
The suffix E denotes epoxy coated reinforcing steel.
The suffix W denotes ASTM A 706 reinforcing steel.

SUPER NOTES SHEET - 1

CELL: GENERAL LAYOUT
REVISED: 5/1/17

GENERAL LAYOUT DETAIL NOTES

USE WITH CURVED BRIDGES

CELL: GL CURVED SLAB NOTE
REVISED: 5/1/17

NOTE: Construct slab and rail on concentric curves parallel to ℄ Roadway.

USE WITH MULTI-SPAN SLABS WITHOUT JOINTS

CELL: GL MULTI SPAN NOTE
REVISED: 5/1/17

NOTE: The slab is continuous over intermediate bents (See Std. Dwg. No. SL-X and Sheet BXX)

ELEVATION VIEW

CELL: GL ELEVATION NOTES
REVISED: 5/1/17

NOTE: Water Surface on date of survey Elev. 0000.00 (0-00-00)

NOTE: Top of Riprap elevation is 0000.00 except as shown in Section A.

NOTE: Channel is normally dry.

GENERAL LAYOUT ADDITIONAL CALL OUTS & NOTES TO CONSIDER

TYPICAL CALL OUTS - PLAN VIEW

℄ Roadway and
℄ Structure

Edge of slab

Face of rail

(T101 BRIDGE RAIL ONLY)
℄ End rail post
Sta. 000+00.00

(WYOMING BRIDGE RAIL ONLY)
End of Rail
Sta. 000+00.00

Barrier end
Sta. 000+00.00

Edge of slab
at ℄ Brg. (for skewed bridges)

Remove existing structure

(Water crossing name with flow arrow)

Edge of paving notch at
℄ Roadway Sta. 000+00.00

(Use if there is not a paving notch)
Bridge End at ℄ Roadway
Sta. 000+00.00

Alignment Tangent Bearing N X°XX'XX" E

℄ Brg. at Bent No. X

℄ Bent No. X

Slope direction for superelevation

(rail post spacing, payment length with approach section length)

North Arrow

Skew angle (between the perpendicular line to the design centerline or long chord on curved bridge, and the centerline of one of the bents)

TYPICAL CALL OUTS - ELEVATION VIEW

Finished grade
at ℄ Roadway

℄ Profile, 20' left profile, 20' right profile

Bottom of end bent cap elevations

T101 railing (See
Dwg. No. SBR-T101)

W740 railing (See
Dwg. No. SBR-W740)

W830 railing (See
Dwg. No. SBR-W830)

Cast in place concrete barrier
(See Dwg. No. SL-5 for details)

Type of superstructure (beams, flat slab)

slope of riprap

∗High Water
Elev. 0000.00

Q2 Elev. 0000.00
(Do not call out Q2 Elev. as "Normal High Water")

OHW Elev. 0000.00 (Ordinary High Water - show instead of Q2 Elev. only when value is known. Still show Q2 Elev. in Hydraulic Data table)

Low channel bottom
Elev. 0000.00

Toe Elev. 0000.00

Size of piles

(At End Bents)
℄ Brg. at ℄ Rdwy. @ Bent No. X
Sta. 000+00.00
Finished Grade Elev. 0000.00

(At Intermediate Bents or Piers)
℄ Bent No. X at ℄ Roadway
Sta. 000+00.00
Finished Grade Elev. 0000.00

Prebore length if required

TYPICAL CALL OUTS - PLAN VIEW (RR)

Skew angle of railroad

℄ Roadway Sta. 000+00.00
at Railroad Sta. 000+00.000

Bearing of railroad

RAILROAD OVERPASS-TRACK CLEARANCE SECTION

Top of rail @ ℄ Roadway
Elev. 0000.000

℄ Track

Vertical clearance dimension between top of track to low clearance elevation (includes allowance for future ballast raise)

Horizontal dimension from centerline of track to edge of slope at top of rail elevation

Face of bents to ℄ track dimension

STRUCTURAL STEEL GIRDER SHEET NOTES

NOTES

Use structural steel meeting the requirements of AASHTO M 270 Grade 50W except as noted.

Splice girder plates only at the locations shown on the plans except as otherwise approved by the Engineer.

Trim web plates to match the Camber Diagram before attaching the flange plates.

Fabricate cross-frame stiffeners and web splices perpendicular to girder top flange. Fabricate bearing stiffeners, jacking stiffeners and ends of girder vertical in their final position after toal dead load deflection.

Dimensions shown in the plans show an ambient temperature of 60°F. Correct length used in fabrication 1/16" per 80 feet of beam length for every 10°F difference in temperature.

See Standard Specifications for Radiographic, Ultrasonic and Magnetic Particle Inspection Requirements.

Use shear studs meeting the requirements of AASHTO M 169 Grades 1010-1020 and the mechanical requirements for Type B studs in accordance with AWS D 1.5 Table 7.1.

Use any type of groove permitted by A.W.S. for shop web splices and flange splices. Submit shop drawings showing complete details of groove welds including welding process, procedure, filler material, welding technique, preheat and interpass temperature, stress release temperature schedule, workmanship, and dimension tolerances for each type of joint used in construction.

Provide bolts in accordance with ASTM F3125, Grade A325 Type 3. See Standard Specifications for the requirements of nuts, washers and direct tension indicators.

Cut plates for flanges, webs, and splice plates for flanges and webs so that the directions of rolling will be parallel to the longiudinal axis of the girder. Show the direction of rolling for these plates on the shop drawings.

Blast clean all structural steel except for machine finish surfaces.

Diaphragms are detailed assuming girders are in the Total Dead Load condition.

Detail and fabricate webs to be plumb in their final position.

USE WITH GRADE A490 BOLTS

Provide bolts in accordance with ASTM F3125, Grade A490 Type 3. See Standard Specifications for the requirements of nuts, washers and direct tension indicators.

USE WITH CAMBER TABLE

NOTE: Total dead load deflections have been increased by 10% to allow for deflections due to shrinkage and crep of the concrete slab.

NOTE: Deflections in the table preceded by a minus sign indicate upward deflections.

NOTE: Vertical Curve and Total Camber values in the table preceded by a minus sign indicate negative camber.

USE WITH TABLE OF DESIGN INFORMATION

DESIGN INFORMATION

1) Future wearing surface = 10 psf

2) Sacrifical wearing surface = ½"

3) Design Method = Load and Resistance Factor Design (LRFD)

4) Jacking Stiffeners designed for 1.3DL + 1.0LL
   Design Load at Bent No. 1 & No. 5 = XXX kips per girder
   Design Load at Pier No. 2, No. 3, & No. 4 = XXX kips per girder

5) The single-lane average daily truck traffic ($ADTT_{SL}$) for a 75 - year life is 400.

CELL: STRUCTURAL STEEL NOTES
REVISED: 5/1/17

SLAB & BEARING SHEET NOTES

NOTE: 4" additional per lap splice has been provided for construction tolerances.
Lap #4E longitudinal bars 2-0 minimum, 2-4 lap provided.
Lap #5E longitudinal bars 2-5 minimum, 2-9 lap provided.

NOTE: See Std. Dwg. No. SL-X for additional slab, rail and threaded insert details.

INCLUDE IF SLAB IS ON A CURVE

NOTE: Place transverse slab bars perpendicular to the structure Long Chord.

NOTE: Place longitudinal bars along an arc parallel to ℄ Roadway.

Detailer and Checker please note: Transverse bars may be placed in sets of different bar lengths depending on the radius of curve.

INCLUDE WHEN AN INTERIOR BAY IS LOCATED UNDER THE CROWN OF THE ROADWAY (NOT REQUIRED IF ON A SUPERELEVATION)

NOTE: Forming straight across the underside of the bay containing the crown break will be permitted. Pay quantities are based on the section shown. Any additional concrete is not paid for.

INCLUDE WITH ELASTOMERIC BEARING PAD DETAIL

NOTE: Test elastomeric bearing pads according to AASHTO M251.
Perform the test based on the following estimated service design load:
DL + (LL + I) = XXX kip per bearing pad

INCLUDE WITH PVC DRAINS

NOTE: Include all costs associated with furnishing and installing PVC drains in the unit price bid for Concrete Class Deck.

CELL: SLAB BEARING NOTES
REVISED: 5/1/17

BULB-TEE DIAPHRAGM SHEET NOTES

DIAPHRAGM NOTES

Paint steel diaphragms in acordance with the Standard Specifications.

Include all costs associated with furnishing and placing steel diaphragms, channels, plates, angles and bolts incidental to the diaphragms in the lump sum bid for Structural Steel.

Middle diaphragm: Use the slotted holes to adjust for the bulb tee web being out of plumb while the C20 x 20 is level. Provide a minimum ⅜"gap between the end of the C10 x 20 and the L 7 x 4 x ½.
Show the assembled detail on the shop drawings.

Δ Tighten bolts in accordance with the Turn-of-Nut Tightening Standard Specification, Sec. 556.03.9, to half of the value specified in Table 556-6.

ΔΔ Tighten bolts in accordance with the Turn-of-Nut Tightening Standard Specification, Sec. 556.03.9, to the full value specified in Table 556-6.

Install diaphragms immediately after setting the beams in place. Tighten the bolts through the beam web and hand-tighten the channel to the clip angle bolts. Perform the final tightening of the channel to the clip angle bolts after field leveling and welding the tie connections, but prior to welding bearings and grouting the keyway.

Include all costs to furnish, place and weld bars, rods, and angles, non-shrink grout and other incidentals incorporated in the beam in the unit price bid for Prestressed Beam - Bulb Tee.

CELL: BULB-TEE DIAPHRAGM NOTES
REVISED: 5/1/17

BULB-TEE ERECTION PLAN SHEET NOTES

NOTE: Include the cost of all rail reinforcing steel in the unit price bid for Prestressed Beams - Bulb Tee.

A NOTE TO INCLUDE ON THE TRANSVERSE SECTION ON BRIDGE DECK SLOPES GREATER THAN 2%

NOTE: Bevel the rail post to match the roadway crown.

CELL: BULB-TEE ERECTION PLAN NOTES
REVISED: 5/1/17

SUPER NOTES SHEET - 2

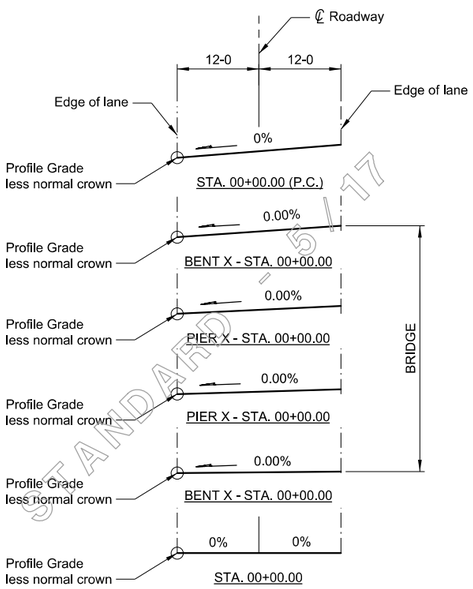

SUPERELEVATION TRANSITION DETAIL

(Ahead on line)
No Scale

SCALE: 1:1
REVISED: 5/1/17

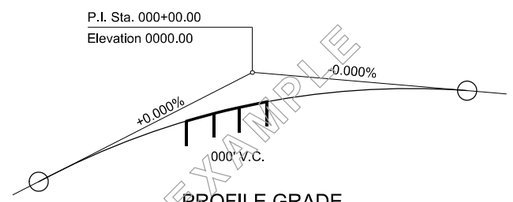

PROFILE GRADE

No Scale

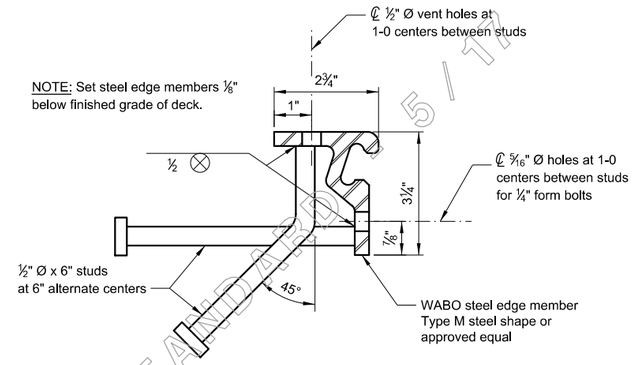

STEEL EDGE MEMBER AND ANCHORAGE SYSTEM

Scale ~ 6" = 1'-0"

SCALE: 1:2
REVISED: 5/1/17

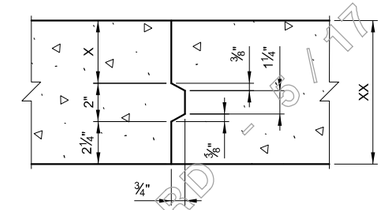

SLAB CONSTRUCTION JOINT

No Scale

NOTE: Thoroughly coat the slab construction joint with an epoxy resin bonding agent which meets the requirements of AASHTO M 235 (Type V). Apply the bonding agent within 30 minutes prior to placing concrete. Continue slab reinforcing through the joints.

SCALE: 1:4
REVISED: 5/1/17

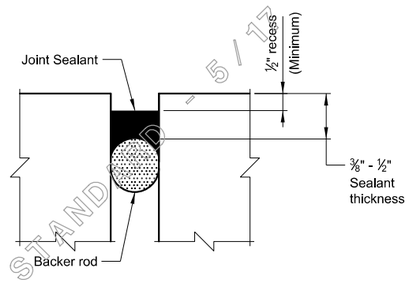

JOINT SEALANT DETAIL

Scale ~ 6" = 1'-0"

SCALE: 1:2
REVISED: 5/1/17

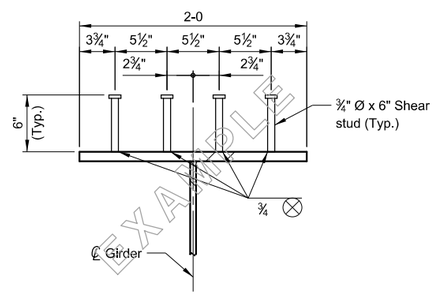

SHEAR STUD DETAIL

Scale ~ 1½" = 1'-0"

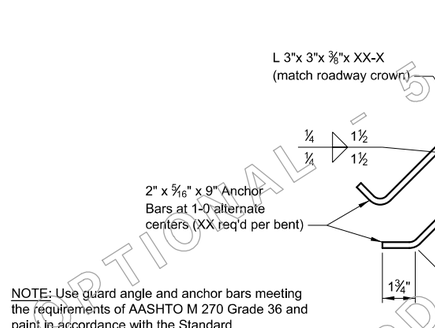

NOTE: Use guard angle and anchor bars meeting the requirements of AASHTO M 270 Grade 36 and paint in accordance with the Standard Specifications.

NOTE: Furnish the guard angle in two pieces if desired and field weld together. Locate the anchor bars 6" maximum from each end. Recess the guard angle ⅛" below finished grade and hold in accurate position while placing the concrete.

GUARD ANGLE DETAIL

Scale ~ 3" = 1'-0"

NOTE: Take all necessary precautions to insure that the concrete is well compacted under the guard angles. Hold the guard angles accurately and firmly in place to prevent damage from vibrators while placing the concrete.

NOTE: Include all costs associated with the furnishing and installing the guard angle in the lump sum bid for Structural Steel.

NOTE: For information only, estimated weight of structural steel for each guard angle = 8.8 lb/ft.

SCALE: 1:4
REVISED: 5/1/17

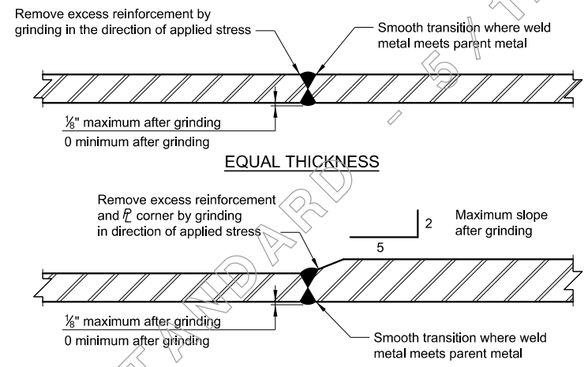

TYPICAL FLANGE SPLICE

No Scale

SCALE: 1:1
REVISED: 5/1/17

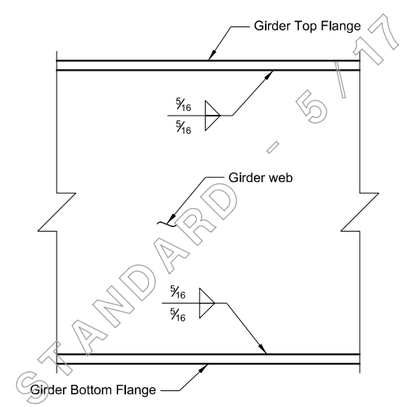

FLANGE TO WEB WELDING

No Scale

SCALE: 1:1
REVISED: 5/1/17

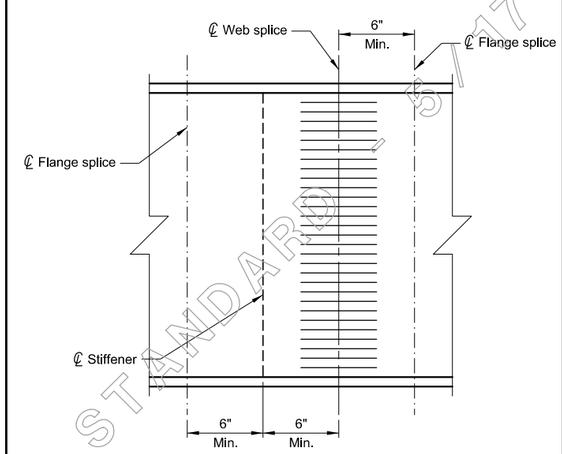

NOTE: Do not allow top and bottom flange shop splices to line up with each other.

FLANGE AND WEB SHOP SPLICE REQUIREMENTS

No Scale

SCALE: 1:1
REVISED: 5/1/17

SUPER DETAILS SHEET - 1

STANDARD - 5 / 17
EXAMPLE
OPTIONAL - 5 / 17

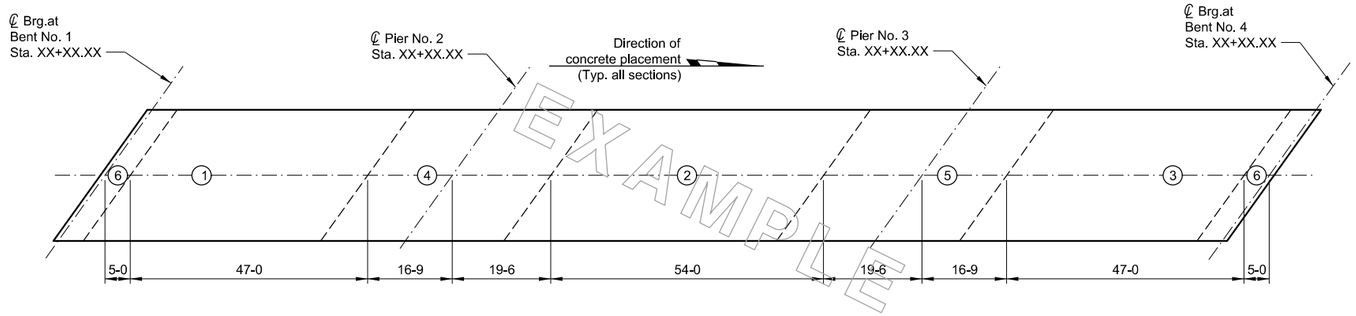

NOTE: The numbers inscribed in the circles represent the sequence of placing sections of the slab.

NOTE: Make final adjustments to expansion devices before placing the slab section in which the device is located.

SLAB POURING SEQUENCE

Scale ~ None

APPLICABLE FOOTNOTES
2

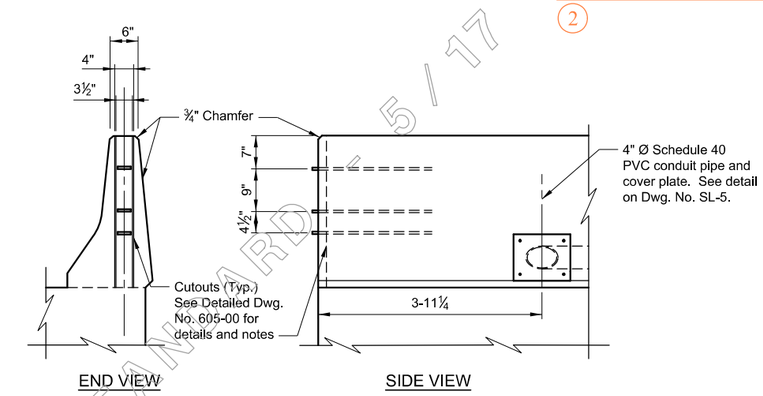

BARRIER END DETAILS

See Dwg. No. SL-5 for additional barrier details
Scale ~ ¾" = 1'-0"

SCALE: 1:16
REVISED: 5/1/17

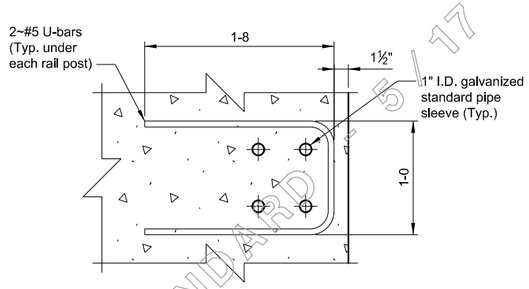

T101 RAIL POST ANCHOR BOLT ASSEMBLY REINFORCEMENT

Scale ~ 1½" = 1'-0"

SCALE: 1:8
REVISED: 5/1/17

BARRIER REINFORCING STEEL

(ALL DIMENSIONS ARE OUT TO OUT)

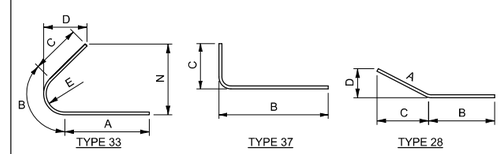

Mark	Size	Type	Length	A	B	C	D	E	N
B1	#4E	33	5-0	2-3½	5"	2-3½	2-4½	1"	9"
B2	#4E	37	3-0		1-10	1-2			
B3	#4E	28	4-3	2-6	1-9	1-2	2-2½		

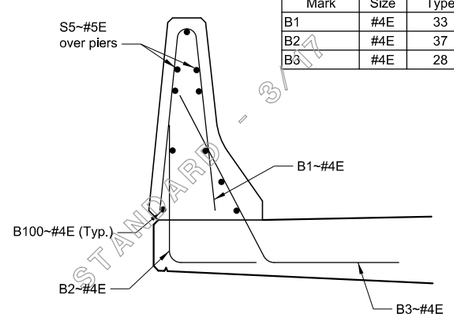

BARRIER RAIL REINFORCEMENT

APPLICABLE FOOTNOTES
3

BARRIER REINFORCING STEEL

(ALL DIMENSIONS ARE OUT TO OUT)

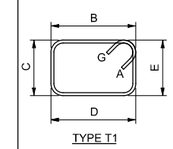

Mark	Size	Type	Length	A	B	C	D	E	G
C1	#4E	T1	5-2	4½"	1-3	11"	1-3	11"	4½"

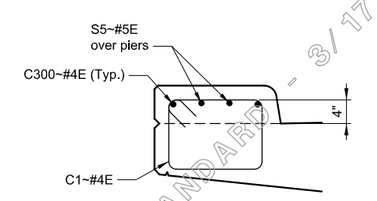

CURB REINFORCEMENT

APPLICABLE FOOTNOTES
3

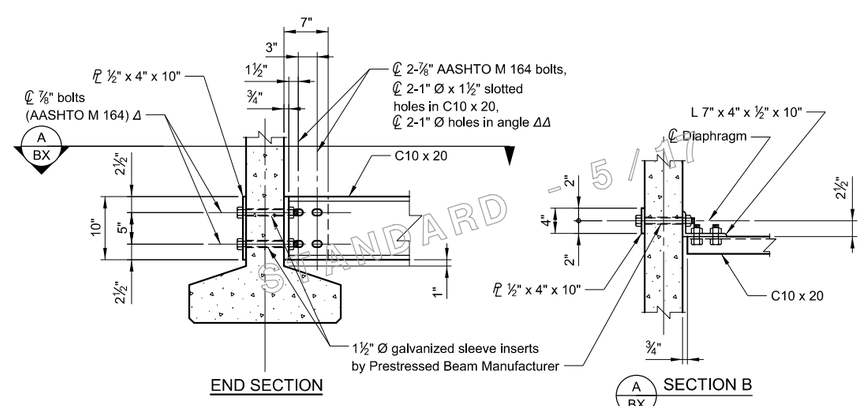

DIAPHRAGM DETAILS

Scale ~ 1" = 1'-0"

SCALE: 1:12
REVISED: 5/1/17

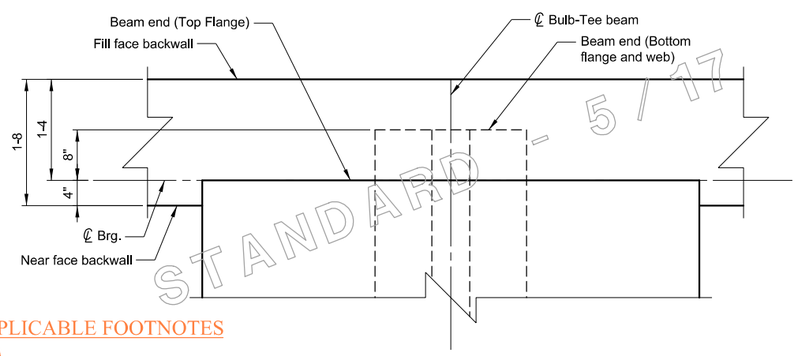

APPLICABLE FOOTNOTES
4

BEAM END DETAIL

Scale ~ 1" = 1'-0"

SCALE: 1:12
REVISED: 5/1/17

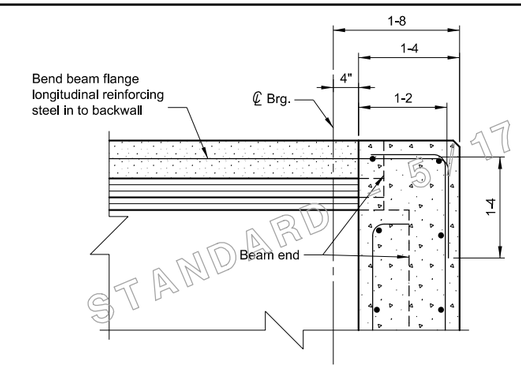

APPLICABLE FOOTNOTES
4

SECTION A

Scale ~ 1" = 1'-0"

SCALE: 1:12
REVISED: 5/1/17

SUPER DETAILS SHEET - 2

EXAMPLE
STANDARD - 5 / 17
STANDARD - 3 / 17

APPLICABLE FOOTNOTES
5

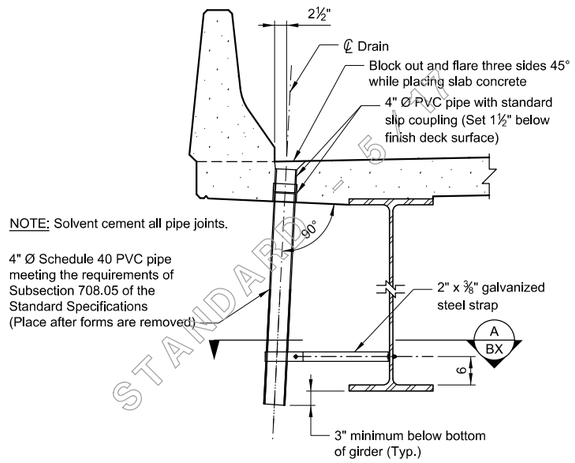

DRAIN DETAIL
Scale ~ ¾" = 1'-0"

2" x ⅜" STRAP FOR STEEL GIRDERS

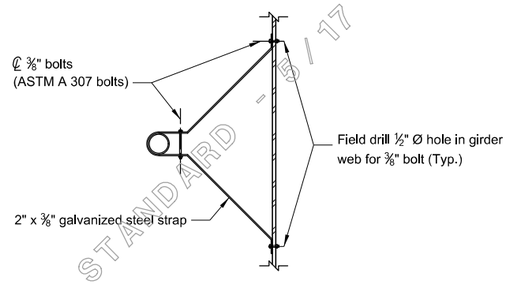

A/BX SECTION A
Scale ~ ¾" =1'-0"

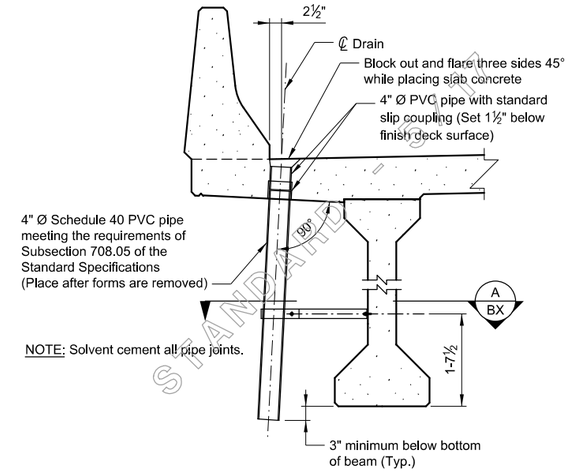

DRAIN DETAIL
Scale ~ ¾" = 1'-0"

2" x ⅜" STRAP FOR CONCRETE GIRDERS

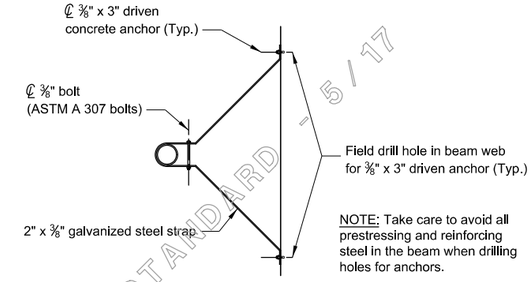

A/BX SECTION A
Scale ~ ¾" =1'-0"

SCALE: 1:16
REVISED: 5/1/17

APPLICABLE FOOTNOTES
6

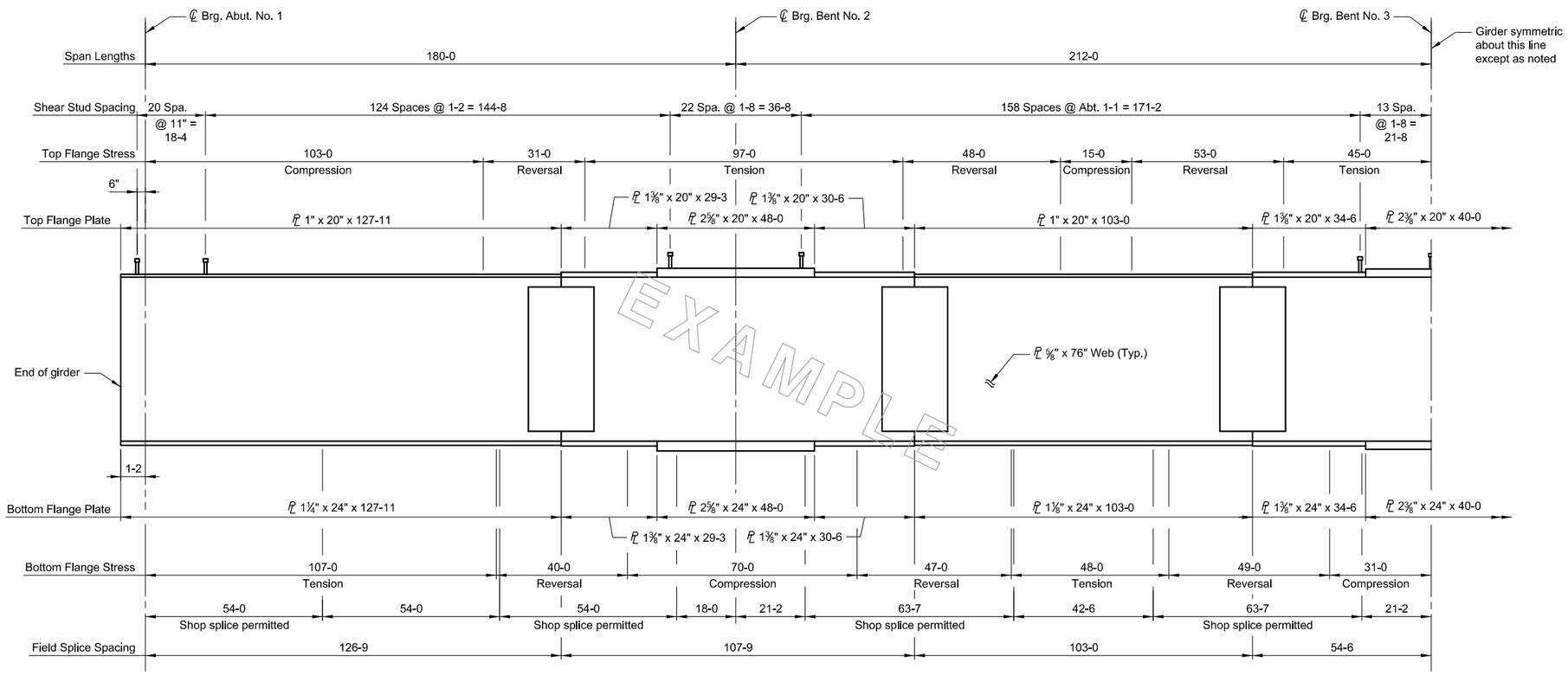

GIRDER ELEVATION
Scale ~ None

SUPER DETAILS SHEET - 3

MDT CADD Memos and Guidance | Design Guidance | Common Bridge Details & Notes Guide | Released 05/01/2017

REHAB SHEET NOTES

GENERAL NOTES

GENERAL: Plans were prepared from original drawings and as-built drawings. No additional survey information was procured for this project. Existing structure dimensions may vary from those shown on the drawings. Verify all dimensions necessary to complete the work.

SPECIFICATIONS: Montana Department of Transportation and the Montana Transportation Commission Standard Specifications for Road and Bridge Construction, 2014 edition, and amendments, and special provisions govern unless otherwise noted.

REINFORCING STEEL: Use new deformed type reinforcing steel meeting the requirements of AASHTO M 31 Grade 60. Include all costs associated with furnishing and placing new reinforcing steel in the unit price bid for Reinforcing Steel or Reinforcing Steel - Epoxy Coated.

Replace existing reinforcing steel damaged during construction that is called out to remain in place at no additional cost to the State.

Include cleaning exposed existing reinforcing steel in other items of work.

If any longitudinal slab reinforcing does not extend to within 2" of the new slab end at the joint, lap splice new reinforcing of the same bar size and long enough to meet the minimum lap indicated on this sheet, and provide 1" clear to the new slab end. Include all costs associated with furnishing and installing the required additional reinforcing in the unit price bid for Reinforcing Steel or Reinforcing Steel - Epoxy Coated.

REINFORCING STEEL SUFFIX:
The suffix E denotes epoxy coated reinforcing steel.

EPOXY RESIN BONDING AGENT: Thoroughly coat all existing concrete in contact with new concrete with an epoxy bonding agent (AASHTO M 235 Type V) immediately prior to placing new concrete. Include all costs associated with providing and applying the epoxy bonding agent in the unit price bid for Concrete Class Deck.

TRAFFIC CONTROL PLAN AND SEQUENCE OF OPERATION: See Special Provisions.

CLASS A AND B BRIDGE DECK REPAIR: Quantities shown may vary from actual field quantities.

Include all costs associated with removing existing joint, reinforcing steel and concrete in the unit price bid for Class B Bridge Deck Repair. Include all costs associated with furnishing and placing new Concrete Class Deck in the unit price bid for Concrete Class Deck.

OVERLAY TREATMENT: Use Concrete Class Overlay on bridge decks requiring thick overlays (See Standard Specifications).

STRUCTURAL STEEL: All structural steel will be measured and paid for on the lump sum basis as set forth in the Standard Specifications. Use structural steel meeting the requirements of AASHTO M 270 Grade 36. Estimated amount = ??? lb.

DIMENSIONS: All dimensions are in feet and inches except as noted. Verify all necessary dimensions of the existing structures in the field before ordering materials. Obtain approval of shop plans from the State of Montana, Department of Transportation before beginning fabrication. If the dimensions and details of the existing structure are not as shown on the plans, vary construction as necessary to best suit existing conditions and the nature of the intended work.

REPAIR CONCRETE: Submit for approval any substitution of rapid setting Portland cement concrete for Concrete Class Deck or Concrete Class Structure. Traffic will not be permitted on concrete repairs until the specified strength is attained.

USE WHEN THERE IS A706 (SEISMIC REBAR)

REINFORCING STEEL: Use new deformed type reinforcing steel meeting the requirements of AASHTO M 31 Grade 60 or ASTM Specification A 706 Grade 60 as specified elsewhere in the plans. Include all costs associated with furnishing and placing new reinforcing steel in the unit price bid for Reinforcing Steel.

The suffix E denotes epoxy coated reinforcing steel.
The suffix W denotes ASTM A706 reinforcing steel.

USE WHEN DESIGNED LRFD

SPECIFICATIONS: Montana Department of Transportation and the Montana Transportation Commission Standard Specifications for Road and Bridge Construction, 2014 edition, and amendments, and special provisions govern unless otherwise noted. Design was prepared in accordance with AASHTO LRFD Bridge Design Specifications Seventh edition - 2014 with 2016 Interim revisions.

USE IF DESIGNED WITH AASHTO - 17TH EDITION

LIVE LOAD: Standard HS25-44 loading.

USE WITH OVERLAY DETAILS

NOTE: See details for overlay treatment at guard angles.

NOTE: See Bridge Work Summary for overlay treatment at a specific location.

USE FOR MILITARY LOADING (INTERSTATE)

LIVE LOAD: Standard HS25-44 loading or alternate loading. Alternate loading for bridges and floor systems consists of two axles 4 feet apart weighing 24,000 lbs. each.

USE IF DESIGNED WITH AASHTO - 17TH EDITION

SPECIFICATIONS: Montana Department of Transportation and the Montana Transportation Commission Standard Specifications for Road and Bridge Construction, 2014 edition, and any amendments thereto, and the Special Provisions govern unless otherwise noted. Design was prepared in accordance with AASHTO Standard Specifications for Highway Bridges, 17th Edition - 2002, and any amendments thereto.

USE IF REINFORCING STEEL PAID FOR IN OTHER ITEMS

REINFORCING STEEL: Use new deformed type reinforcing steel meeting the requirements of AASHTO M 31 Grade 60.

Replace existing reinforcing steel damaged during construction that is called out to remain in place at no additional cost to the State.

Include cleaning exposed existing reinforcing steel in other items of work.

USE IF THERE IS A SPECIAL SEQUENCE OF OPERATIONS (PHASE CONSTRUCTION)

SEQUENCE OF OPERATIONS: See Special Provisions.

USE IF CONTROL SURVEY IS REQUIRED FOR REMOVAL OR MILLING OF THE DECK

CONTROL SURVEY: Establish a control elevation at each bridge before removing or milling the deck.

USE IF REINFORCING STEEL PAID FOR IN OTHER ITEMS

BRIDGE DECK TREATMENT: All bridge deck treatments include the approach slabs unless they are called out to be removed.

REMOVE BRIDGE APPROACH SLAB: See Road Plan Summary Sheets.

POLYMER OVERLAY: See Special Provisions.

BRIDGE DECK MILLING: Use Hydrodemolition to reach final milling depth shown on the plans.

NOTE: Right and left side of the structure are referenced to increasing staioning.

USE IF RE-SETTING BRIDGE APPROACH SECTIONS IN CONJUCTION WITH A RAIL REVISION

NOTE: Remove and reset existing approach guardrail as necessary to install new concrete barrier. Include all costs to remove and reset in the unit price bid for Revise Concrete Barrier Rail - Br.

USE IF BRIDGE HAS AN EXISTING ASPHALT IN CONJUCTION WITH A RAIL REVISION

NOTE: The existing bridge has an asphalt overlay that may vary in depth. The barrier heights were determined using the original construction drawings and an estimated overlay depth of XXX' on the bridge. Verify the finished grade of the roadway surface and position of the bridge apprroach rail at the correct height shown on the plans.

USE IF BRIDGE HAS AN EXISTING ASPHALT IN CONJUCTION WITH A RAIL REVISION

NOTE: Bridge barrier rebar lengths are based on an estimated asphalt overlay depth of XXX". Verify existing grade at face of curb before ordering materials and fabrication.

REH NOTES SHEET - 1

CELL: REHAB NOTES
REVISED: 5/1/17

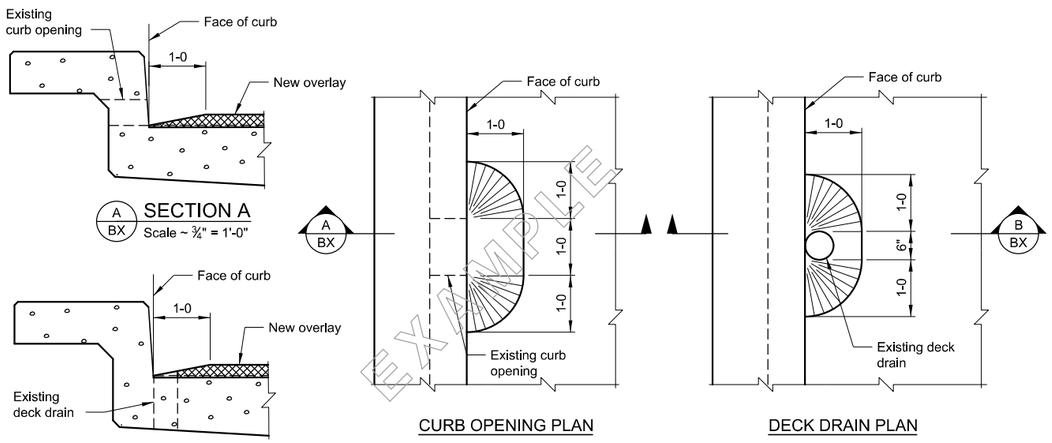

OVERLAY TREATMENT AT CURB OPENINGS AND DECK DRAINS

Scale ~ ¾" = 1'-0"

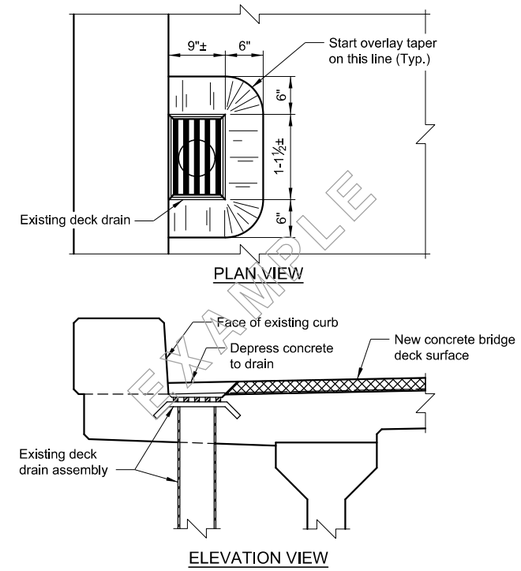

OVERLAY TREATMENT AT DECK DRAINS

Scale ~ 1" = 1'-0"

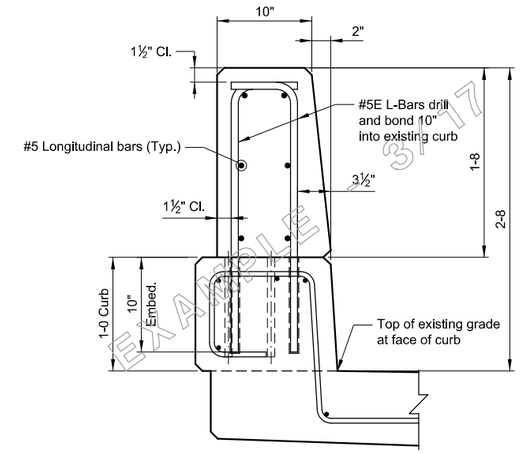

CURB MOUNTED BARRIER DETAIL

Scale ~ 1½" = 1'-0"

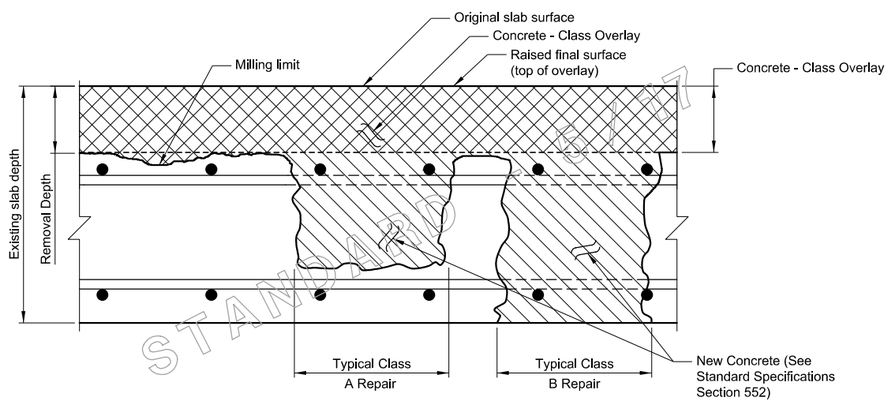

NOTE: Reinforcing steel may be located above the milling limit.

NOTE: For removal depths, see Table of Bridge Treatments on Sheet No. BXX.

BRIDGE DECK REPAIR AND THICK OVERLAY DEFINITION

No Scale

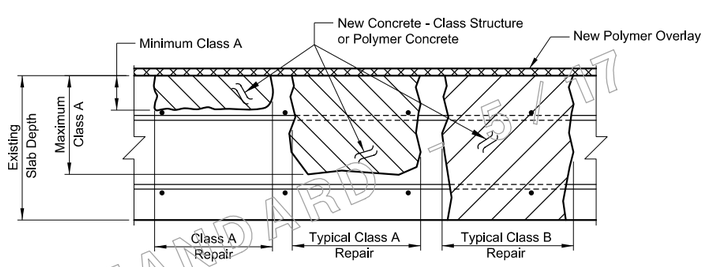

BRIDGE DECK REPAIR AND THIN OVERLAY DEFINITION

No Scale

SCALE: 1:4
REVISED: 5/1/17

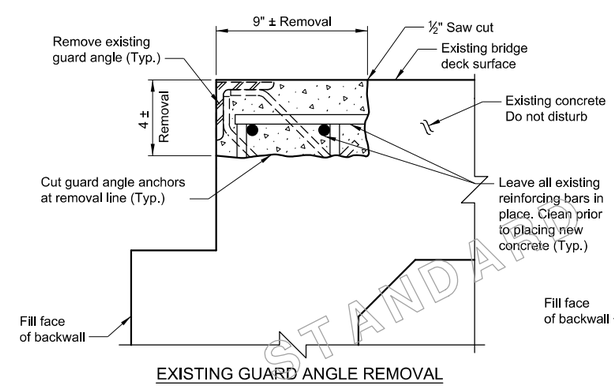

EXISTING GUARD ANGLE REMOVAL

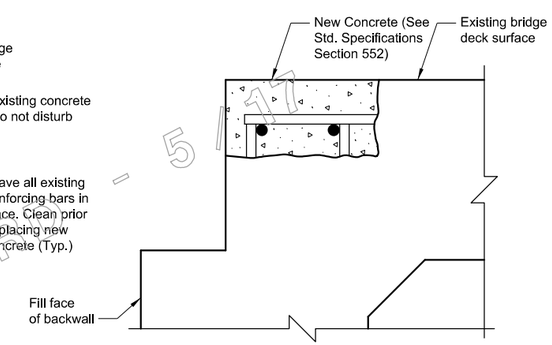

NEW BRIDGE END DETAIL

NOTE: Include all costs associated with removing the existing guard angle, placing new reinforcing steel and concrete, and removing and replacing any asphalt that is required to complete the work in the unit price bid for Revise Joint.

NOTE: If two transverse reinforcing bars are not present within 3" of the top of the slab, place new #4 transverse bars as necessary so there are two bars within the repair area. Ensure new bars have a minimum 1½" clear cover.

GUARD ANGLE REMOVAL DETAIL

SCALE: 1:4
REVISED: 5/1/17

STANDARD DRAWINGS

PRESTRESSED CONCRETE BEAMS

COMMON PRESTRESSED CONCRETE GIRDER TYPE, SIZE & SPAN – SHEET 1 (FORTERRA)

COMMON PRESTRESSED CONCRETE GIRDER TYPE, SIZE & SPAN – SHEET 2 (OLDCASTLE)

TYPE 1

TYPE MT-28

TYPE A

TYPE 4

TYPE M-72

TYPE MTS

TYPE BULB-TEE

TYPE TRI-DECK

TYPE VOIDED SLAB

SLABS

SL-5

SL-6

SL-7

SL-8

RAILS

T101

W740

W830

W740 & W830 TERMINATION DETAILS

BARRIER

PEDESTRIAN RAIL

HAND RAIL

DRILLED FOUNDATION ANCHOR POST

TIMBER BRIDGE RAIL REVISION

OTHER

STATIC LOAD TEST FRAME FIELD SETUP

PILE SPLICE DETAILS & TIPS

FORTERRA PRE-STRESSED CONCRETE GIRDER SHAPES

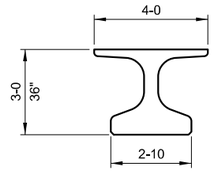

MTS - 36
MAX SPAN LENGTH = 105 FT

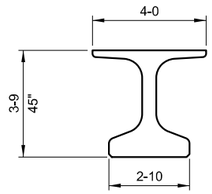

MTS - 45
MAX SPAN LENGTH = 122 FT

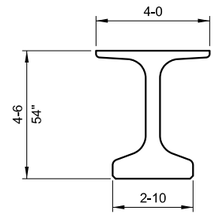

MTS - 54
MAX SPAN LENGTH = 135 FT

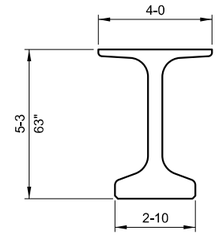

MTS - 63
MAX SPAN LENGTH = 148 FT

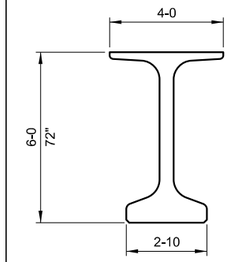

MTS - 72
MAX SPAN LENGTH = 160 FT

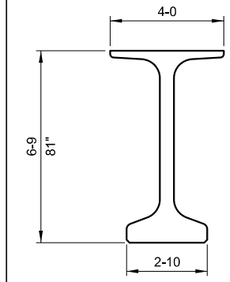

MTS - 81
MAX SPAN LENGTH = 174FT

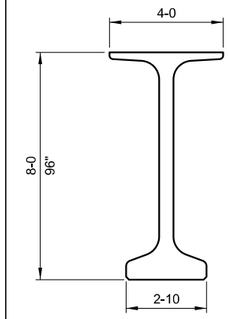

MTS - 96
MAX SPAN LENGTH = 194 FT

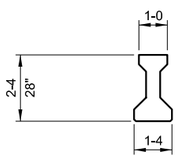

TYPE I
MAX SPAN LENGTH = 55 FT

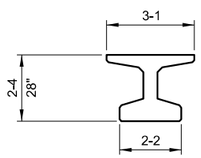

TYPE MT - 28
MAX SPAN LENGTH = 75 FT

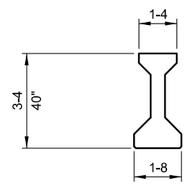

TYPE A
MAX SPAN LENGTH = 85FT

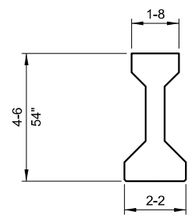

TYPE IV
MAX SPAN LENGTH = 114 FT

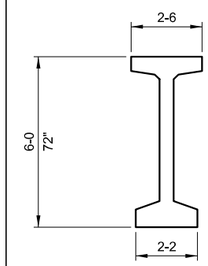

TYPE M - 72
MAX SPAN LENGTH = 145 FT

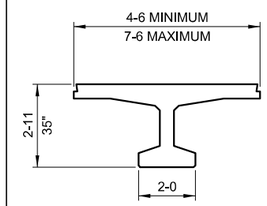

BULB - TEE 35
MAX SPAN LENGTH = 85 FT

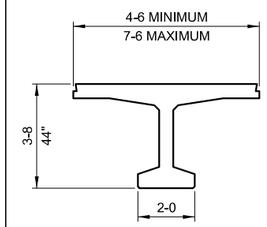

BULB - TEE 44
MAX SPAN LENGTH = 100 FT

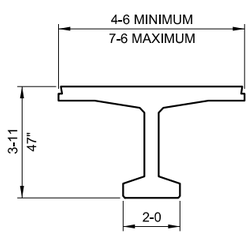

BULB - TEE 47
MAX SPAN LENGTH = 105 FT

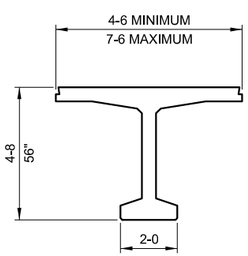

BULB - TEE 56
MAX SPAN LENGTH = 120 FT

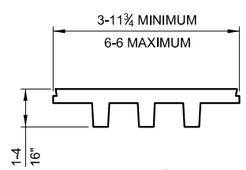

TRI - DECK 16
MAX SPAN LENGTH = 35 FT

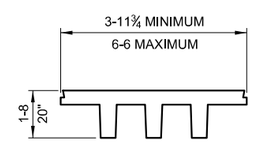

TRI - DECK 20
MAX SPAN LENGTH = 45 FT

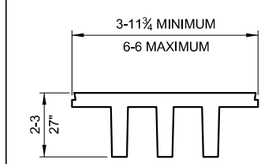

TRI - DECK 27
MAX SPAN LENGTH = 65 FT

NOTES

Maximum span lengths shown are based on available literature from manufacturer.

COMMON PRESTRESSED CONCRETE GIRDER TYPE, SIZE & SPAN - SHEET 1

Scale ~ ⅜" = 1'-0"

MDT MONTANA DEPARTMENT OF TRANSPORTATION
BRIDGE BUREAU

REVISED	
REVISED	
REVISED	
REVISED	
APPROVED	4-25-17
CHECKED	D.F.J.
DRAWN	3-15-17
$DATE$	$TIME$
T.J.B.	$FILEABBREV$

DRAWING NO.
GIRDERS - 1

OLDCASTLE - SPOKANE PRE-STRESSED CONCRETE GIRDER SHAPES

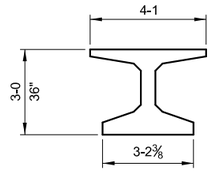

WF36G
MAX SPAN LENGTH = 105 FT

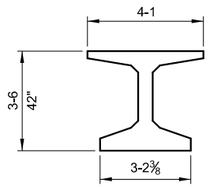

WF42G
MAX SPAN LENGTH = 115 FT

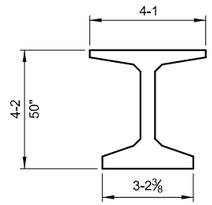

WF50G
MAX SPAN LENGTH = 130 FT

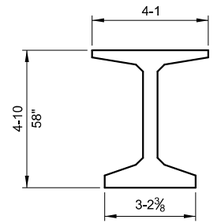

WF58G
MAX SPAN LENGTH = 145 FT

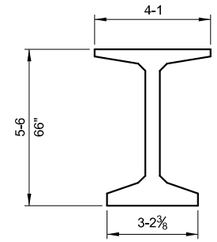

WF66G
MAX SPAN LENGTH = 165 FT

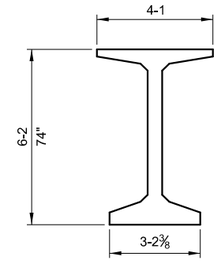

WF74G
MAX SPAN LENGTH = 175 FT

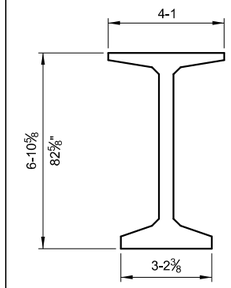

WF83G
MAX SPAN LENGTH = 195 FT

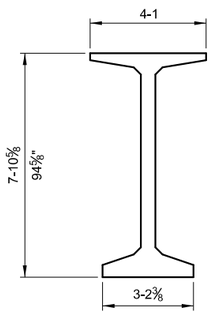

WF95G
MAX SPAN LENGTH = 195 FT

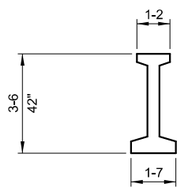

W42G
MAX SPAN LENGTH = 85 FT

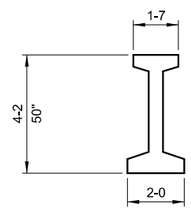

W50G
MAX SPAN LENGTH = 115 FT

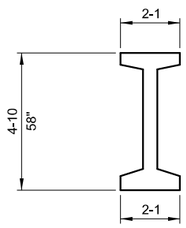

W58G
MAX SPAN LENGTH = 130 FT

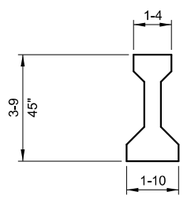

TYPE III
MAX SPAN LENGTH = XXX FT

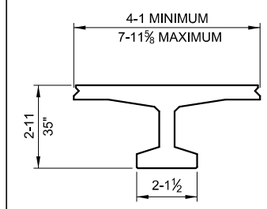

BULB - TEE 35
MAX SPAN LENGTH = 85 FT

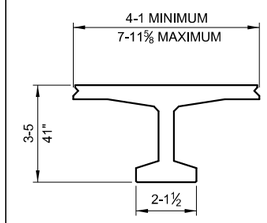

BULB - TEE 41
MAX SPAN LENGTH = 100 FT

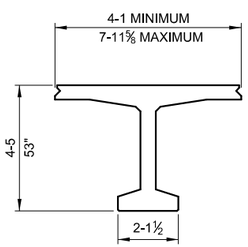

BULB - TEE 53
MAX SPAN LENGTH = 105 FT

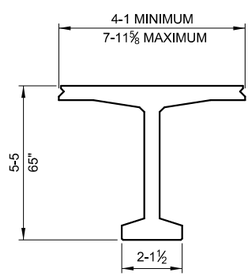

BULB - TEE 65
MAX SPAN LENGTH = 120 FT

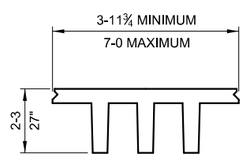

TRI - DECK 27
MAX SPAN LENGTH = 65 FT

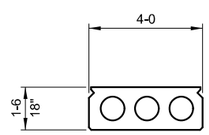

VOIDED SLAB 18
MAX SPAN LENGTH = 45 FT

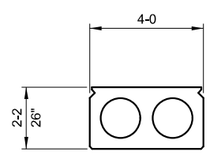

VOIDED SLAB 26
MAX SPAN LENGTH = 65 FT

NOTES

Maximum span lengths shown are based on available literature from manufacturer.

COMMON PRESTRESSED CONCRETE GIRDER TYPE, SIZE & SPAN - SHEET 2

Scale ~ ⅜" = 1'-0"

MDT MONTANA DEPARTMENT OF TRANSPORTATION

BRIDGE BUREAU

REVISED		
REVISED		
REVISED		
REVISED		
APPROVED	4-25-17	D.F.J.
CHECKED		
DRAWN	3-15-17	T.J.B.
$DATE$	$TIME$	$FILEABBREV$

DRAWING NO.
GIRDERS - 2

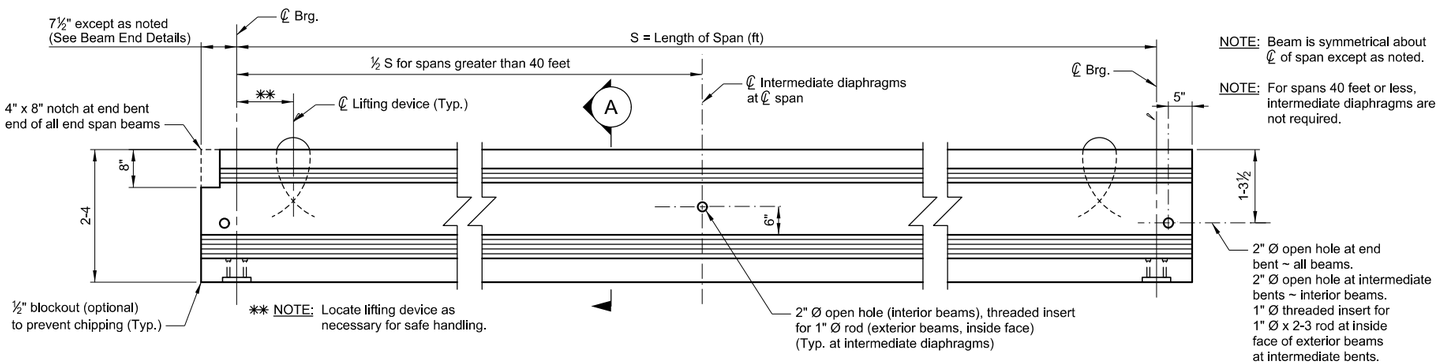

NOTE: Beam is symmetrical about ℄ of span except as noted.

NOTE: For spans 40 feet or less, intermediate diaphragms are not required.

ELEVATION

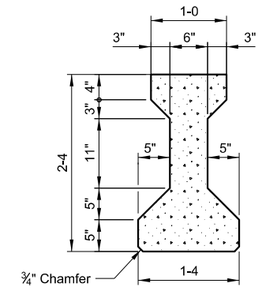

SECTION A

NOTES

SPECIFICATIONS: For design specifications, see General Layout. Design and fabricate the beam to support the dead load and live load stresses and provide a minimum ultimate moment capacity shown on the Erection Plan. Show stresses in the beam under each loading condition that is anticipated in the manufacture, handling and service life of the beam.

PRESTRESSING STEEL: Use 0.500" diameter or 0.600" diameter, 7 wire strand prestressing steel.

HARDWARE: Threaded inserts, hold down devices, lifting devices and any other hardware which is to be incorporated in the beam will be approved by the Engineer before fabrication is begun.

DIAPHRAGMS: See Erection Plan for location of diaphragms when structure is skewed.

BEAM LENGTH: Increase the overall length of the beam 0.0075 inches per foot of length to allow for elastic shortening, shrinkage and creep.

SHOES: Paint shoes according to Standard Specifications. See details on Bridge Plans if expansion shoes are required. See General Layout for type of shoes required.

REINFORCING STEEL: See General Layout.

SHEAR REINFORCING: The shear and end reinforcement shown on this drawing is the Department's minimum. Increase reinforcing if needed to meet the requirements of the AASHTO code specified on the General layout.

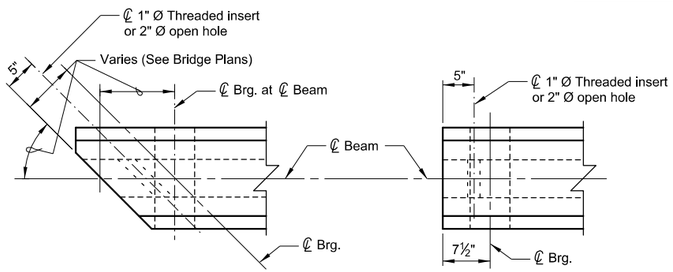

SKEWED BRIDGE

SQUARE BRIDGE

BEAM END DETAILS

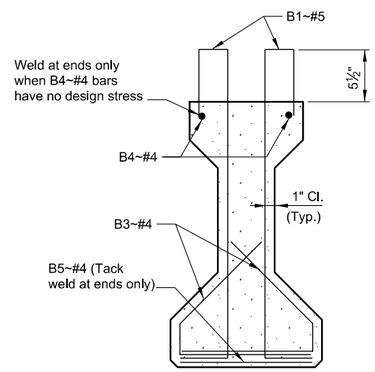

SECTION B

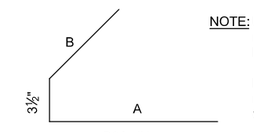

B3A~#4

NOTE: Use the following equation to determine the number of B1~#5 stirrups required per beam:
N = ((S - 15) / 2 + 21) x 2

If the result of the equation is an odd number, round to the next largest even whole number.

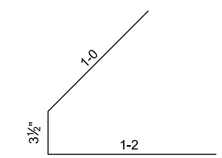

B3~#4 (✱ 32 required per beam)

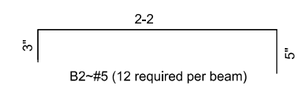

B2~#5 (12 required per beam)

✱ NOTE: Number shown is for square beam ends. Number required for skewed beam ends varies.

NOTE: The number of B2A~#5 stirrups required per beam varies due to varying skew.

NOTE: Length of A and B varies due to varying skew.

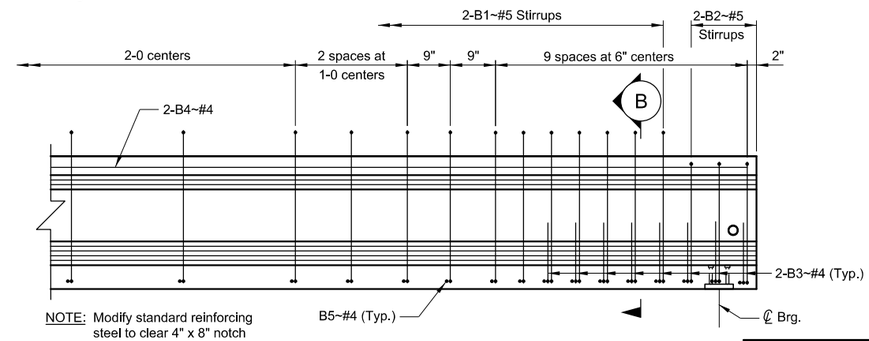

NOTE: Modify standard reinforcing steel to clear 4" x 8" notch as required.

ELEVATION ~ SQUARE BEAM END

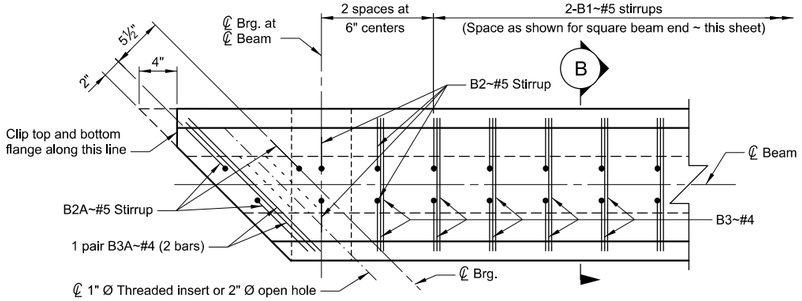

PLAN VIEW ~ SKEWED BEAM END

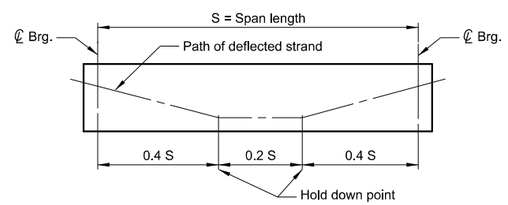

TYPICAL DEFLECTED STRAND FOR PRE-TENSIONING SYSTEM

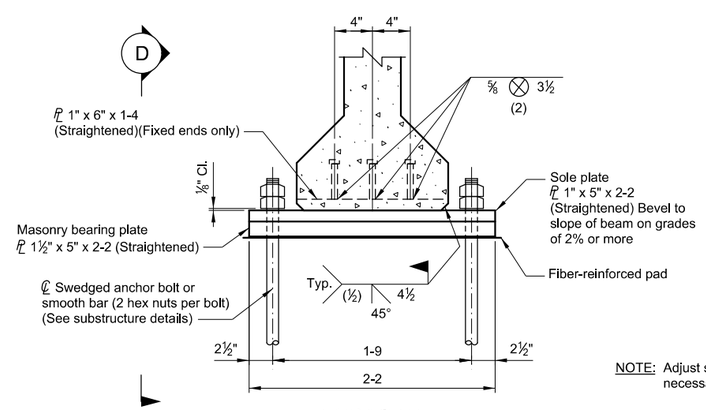

END VIEW

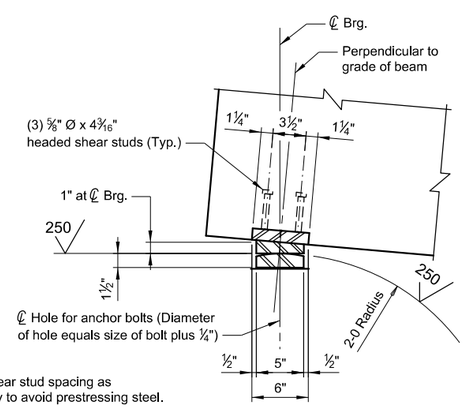

NOTE: Adjust shear stud spacing as necessary to avoid prestressing steel.

VIEW D

FIXED SHOE DETAILS

NOTE: Include all costs to furnish and install anchor bolts, nuts, shoes, fiber-reinforced pads and embedded plates in the unit price bid for Prestressed Beams ~ Type 1.

NOTE: See substructure details for length and size of anchor bolts.

NOTE: Use structural steel meeting the requirements of AASHTO M 270 Grade 36 for embedded plates and shoes. Use structural steel meeting the requirements of AASHTO M 314 Grade 36 for anchor bolts. Galvanize anchor bolts in accordance with AASHTO M 232. Use headed shear studs meeting the requirements of AASHTO M 169 Grades 1010 through 1020.

STANDARD PRESTRESSED CONCRETE BEAM
TYPE 1

No Scale

MDT MONTANA DEPARTMENT OF TRANSPORTATION — BRIDGE BUREAU

REVISED		
REVISED		
REVISED		
REVISED	2-25-15	D.F.J.
APPROVED	11-12-08	D.F.J.
CHECKED	6-16-08	J.S.O.
DRAWN	3-5-08	T.J.B.
$DATES	$TIMES	$FILEABBREVS

DRAWING NO.
B-1

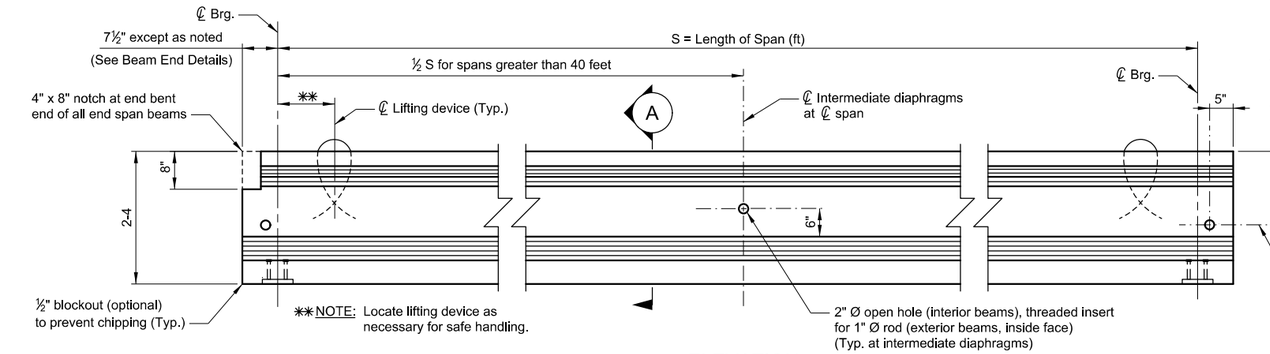

NOTE: Beam is symmetrical about ℄ of span except as noted.

NOTE: For spans 40 feet or less, intermediate diaphragms are not required.

ELEVATION

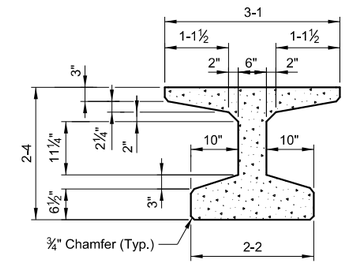

SECTION A

NOTES

SPECIFICATIONS: For design specifications, see General Layout. Design and fabricate the beam to support the dead load and live load stresses and provide a minimum ultimate moment capacity shown on the Erection Plan. Show stresses in the beam under each loading condition that is anticipated in the manufacture, handling and service life of the beam.

PRESTRESSING STEEL: Use 0.500" diameter or 0.600" diameter, 7 wire strand prestressing steel.

HARDWARE: Threaded inserts, hold down devices, lifting devices and any other hardware which is to be incorporated in the beam will be approved by the Engineer before fabrication is begun.

DIAPHRAGMS: See Erection Plan for location of diaphragms when structure is skewed.

BEAM LENGTH: Increase the overall length of the beam 0.0075 inches per foot of length to allow for elastic shortening, shrinkage and creep.

SHOES: Paint shoes according to Standard Specifications. See details on Bridge Plans if expansion shoes are required. See General Layout for type of shoes required.

REINFORCING STEEL: See General Layout.

SHEAR REINFORCING: The shear and end reinforcement shown on this drawing is the Department's minimum. Increase reinforcing if needed to meet the requirements of the AASHTO code specified on the General layout.

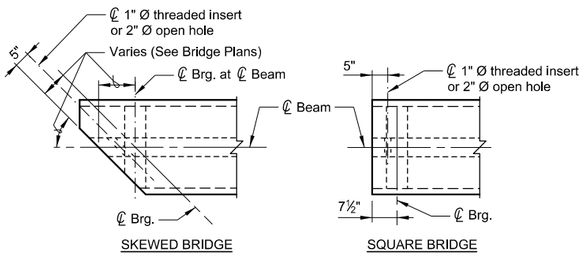

BEAM END DETAILS

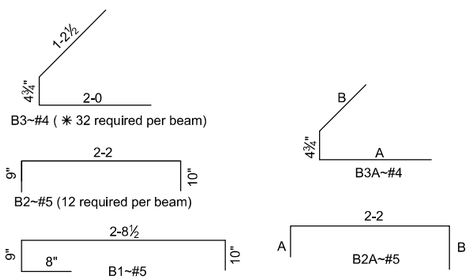

NOTE: Use the following equation to determine the number of B1~#5 stirrups required per beam:
N = ((S - 38.5) / 2 + 43) x 2

If the result of the equation is an odd number, round to the next largest even whole number.

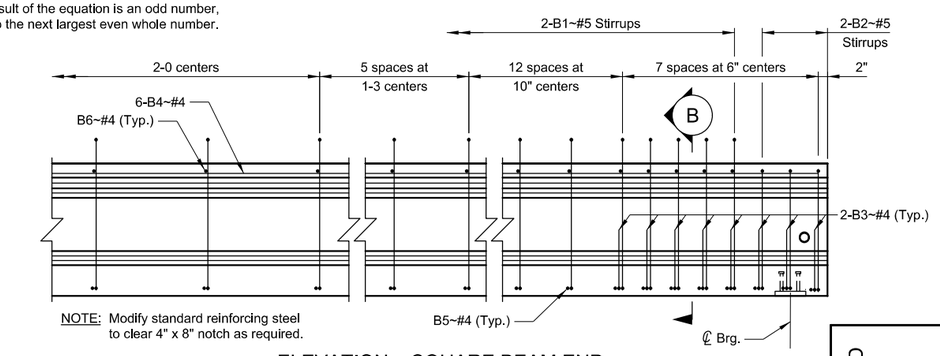

NOTE: Modify standard reinforcing steel to clear 4" x 8" notch as required.

ELEVATION ~ SQUARE BEAM END

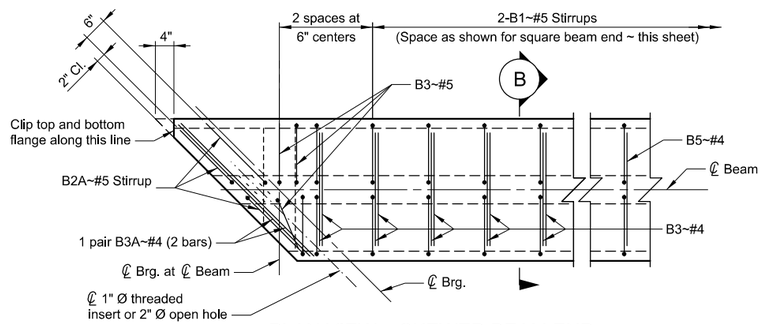

PLAN VIEW ~ SKEWED BEAM END

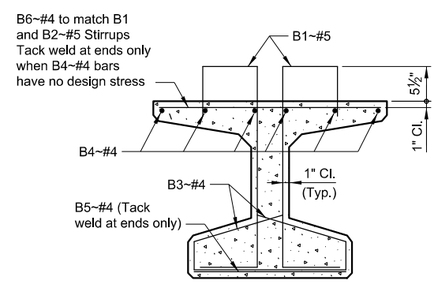

SECTION B

✱NOTE: Number shown is for square beam ends. Number required for skewed beam ends varies.

NOTE: The number of B2A~#5 stirrups required per beam varies due to varying skew.

NOTE: Length of A and B varies due to varying skew.

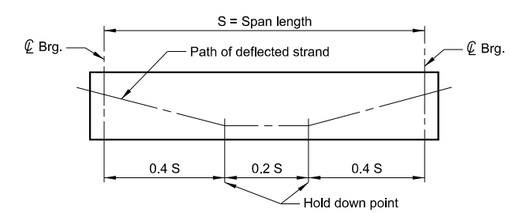

TYPICAL DEFLECTED STRAND FOR PRE-TENSIONING SYSTEM

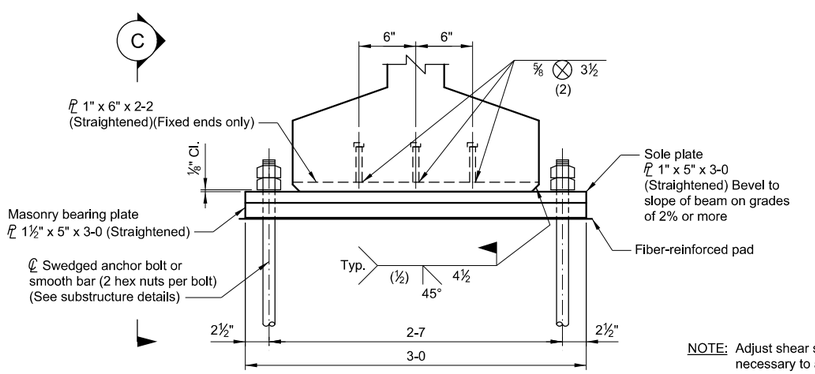

END VIEW

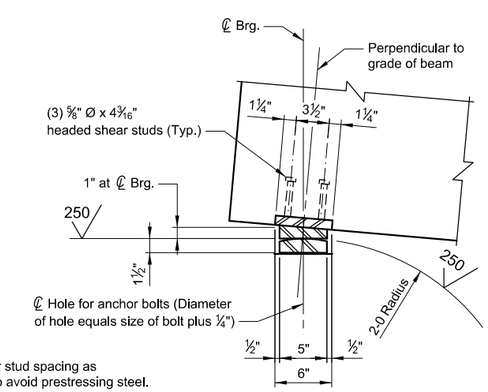

VIEW C

NOTE: Adjust shear stud spacing as necessary to avoid prestressing steel.

FIXED SHOE DETAILS

NOTE: Include all costs to furnish and install anchor bolts, nuts, shoes, fiber reinforced pads and embedded plates in the unit price bid for Prestressed Beams ~ Type MT-28.

NOTE: See substructure details for length and size of anchor bolts.

NOTE: Use structural steel meeting the requirements of AASHTO M 270 Grade 36 for embedded plates and shoes. Use structural steel meeting the requirements of AASHTO M 314 Grade 36 for anchor bolts. Galvanize the anchor bolts meeting the requirements of AASHTO M 232. Use headed shear studs meeting the requirments of AASHTO M 169 Grades 1010 through 1020.

STANDARD PRESTRESSED CONCRETE BEAM TYPE MT-28

No Scale

MDT MONTANA DEPARTMENT OF TRANSPORTATION

BRIDGE BUREAU

REVISED		
REVISED		
REVISED		D.F.J.
REVISED	2-26-15	D.F.J.
APPROVED	11-12-08	J.S.O.
CHECKED	6-6-08	T.J.B.
DRAWN	2-26-08	$FILEABBREVS
$DATE$	$TIME$	

DRAWING NO. M-28

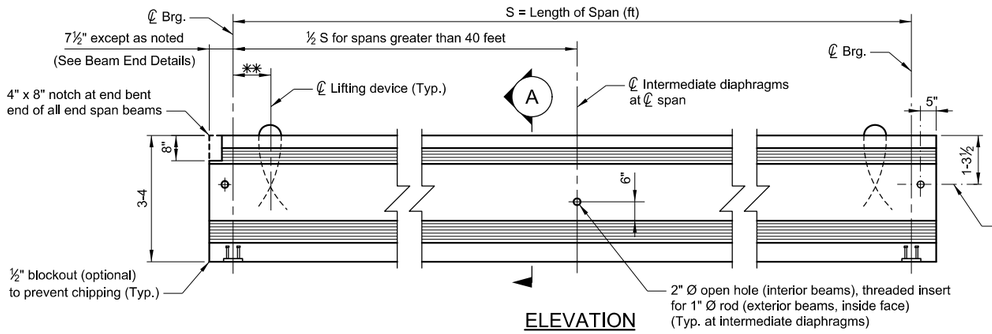

ELEVATION

NOTE: Beam is symmetrical about ℄ of span except as noted.

NOTE: For spans 40 feet or less, intermediate diaphragms are not required.

✱✱ NOTE: Locate lifting device as necessary for safe handling.

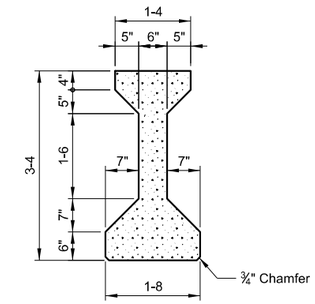

SECTION A

NOTES

SPECIFICATIONS: For design specifications, see General Layout. Design and fabricate the beam to support the dead load and live load stresses and provide a minimum ultimate moment capacity shown on the Erection Plan. Show stresses in the beam under each loading condition that is anticipated in the manufacture, handling and service life of the beam.

PRESTRESSING STEEL: Use 0.500" diameter or 0.600" diameter, 7 wire strand prestressing steel.

HARDWARE: Threaded inserts, hold down devices, lifting devices and any other hardware which is to be incorporated in the beam will be approved by the Engineer before fabrication is begun.

DIAPHRAGMS: See Erection Plan for location of diaphragms when structure is skewed.

BEAM LENGTH: Increase the overall length of the beam 0.0075 inches per foot of length to allow for elastic shortening, shrinkage and creep.

SHOES: Paint shoes according to Standard Specifications. See details on Bridge Plans if expansion shoes are required. See General Layout for type of shoes required.

REINFORCING STEEL: See General Layout.

SHEAR REINFORCING: The shear and end reinforcement shown on this drawing is the Department's minimum. Increase reinforcing if needed to meet the requirements of the AASHTO code specified on the General layout.

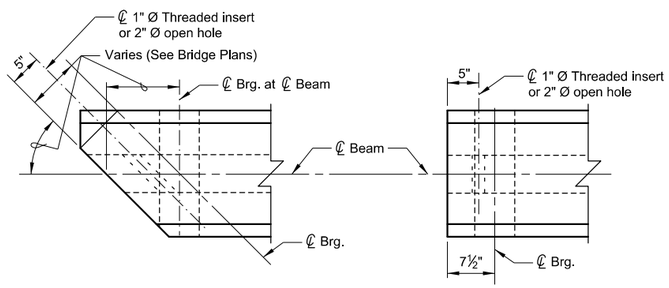

SKEWED BRIDGE

SQUARE BRIDGE

BEAM END DETAILS

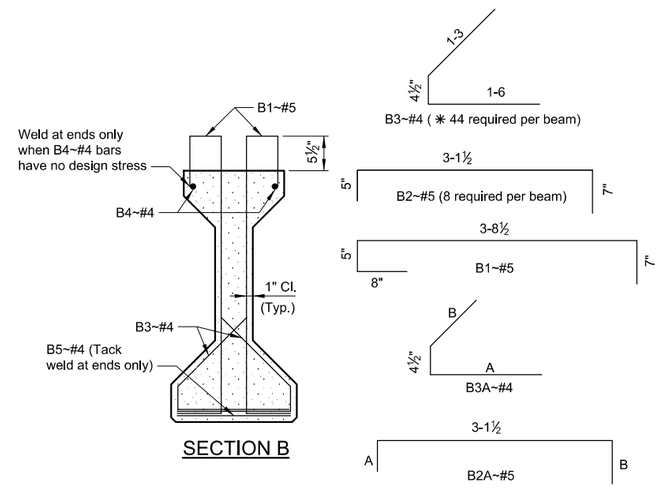

SECTION B

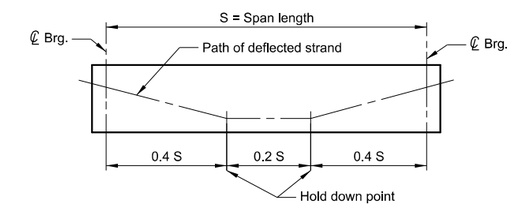

TYPICAL DEFLECTED STRAND FOR PRE-TENSIONING SYSTEM

✱ NOTE: Number shown is for square beam ends. Number required for skewed beam ends varies.

NOTE: The number of B2A~#5 stirrups required per beam varies due to varying skew.

NOTE: Length of A and B varies due to varying skew.

NOTE: Use the following equation to determine the number of B1~#5 stirrups required per beam:
N = ((S - 20) / 2 + 27) x 2

If the result of the equation is an odd number, round to the next largest even whole number.

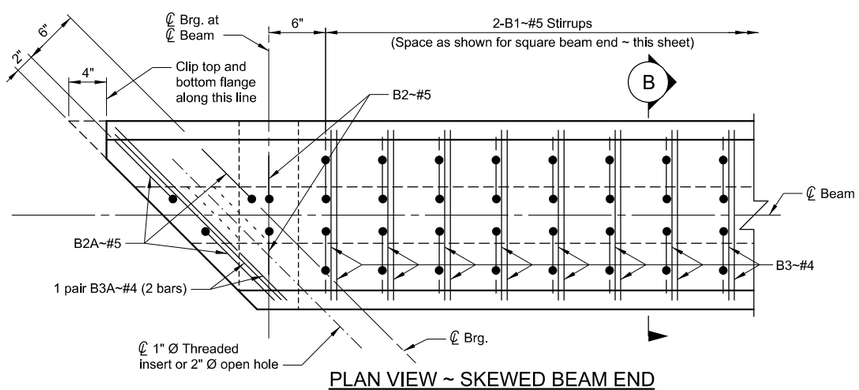

PLAN VIEW ~ SKEWED BEAM END

NOTE: Include all costs to furnish and install anchor bolts, nuts, shoes, fiber reinforced pads and embedded plates in the unit price bid for Prestressed Beams ~ Type A.

NOTE: Use structural steel meeting the requirements of AASHTO M 270 Grade 36 for embedded plates and shoes. Use structural steel meeting the requirements of AASHTO M 314 Grade 36 for anchor bolts. Galvanize the anchor bolts meeting the requirements of AASHTO M 232. Use headed shear studs meeting the requirments of AASHTO M 169 Grades 1010 through 1020.

NOTE: See substructure details for length and size of anchor bolts.

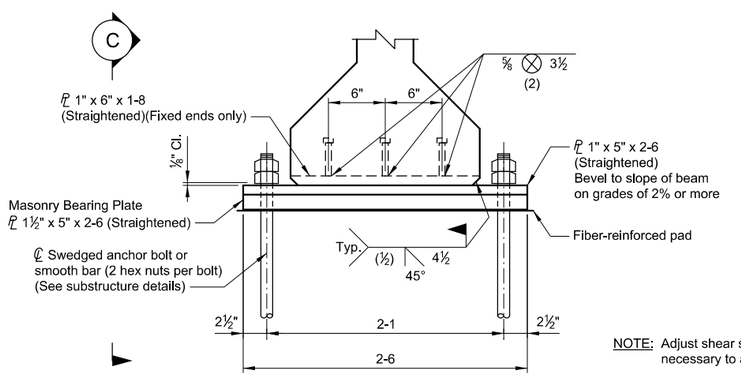

END VIEW

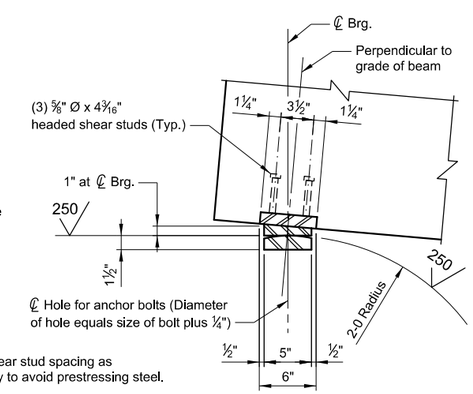

VIEW C

FIXED SHOE DETAILS

NOTE: Adjust shear stud spacing as necessary to avoid prestressing steel.

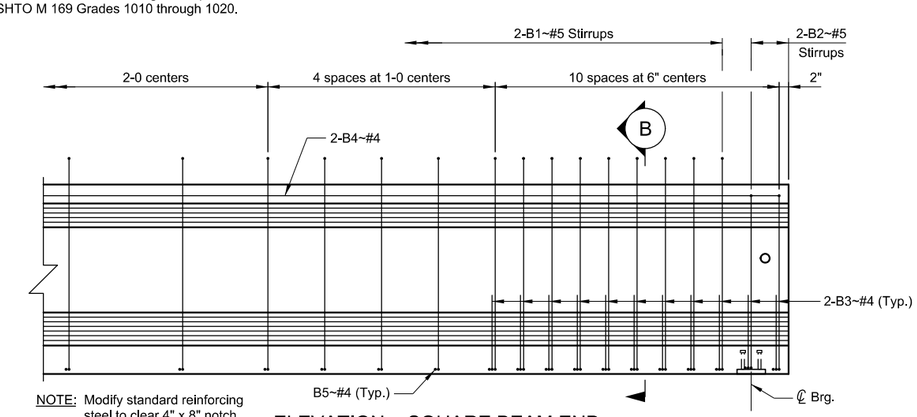

NOTE: Modify standard reinforcing steel to clear 4" x 8" notch as required.

ELEVATION ~ SQUARE BEAM END

STANDARD PRESTRESSED CONCRETE BEAM TYPE A

No Scale

MDT MONTANA DEPARTMENT OF TRANSPORTATION

BRIDGE BUREAU

REVISED			
REVISED			
REVISED			
REVISED	2-25-15	D.F.J.	
APPROVED	11-12-08	D.F.J.	
CHECKED	6-23-08	J.S.O.	
DRAWN	3-5-08	T.J.B.	SFILEABBREV$
$DATE$	$TIME$		

DRAWING NO. B-A

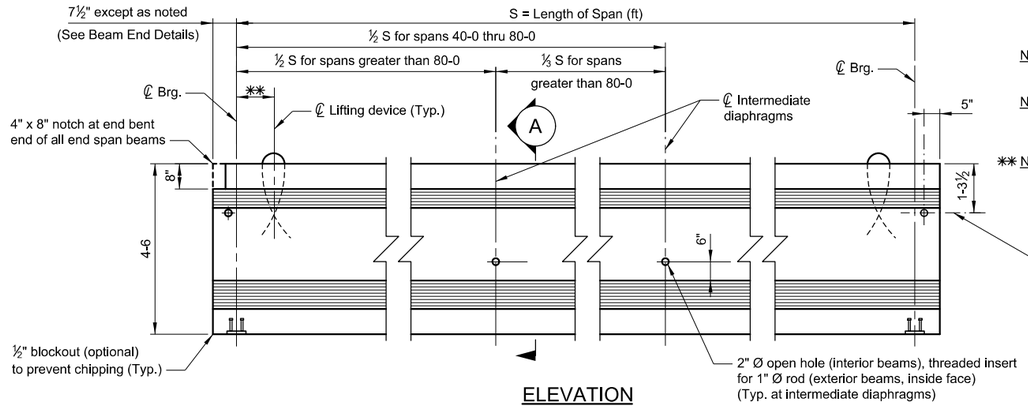

ELEVATION

NOTE: Beam is symmetrical about ℄ of span except as noted.

NOTE: For spans 40 feet or less, intermediate diaphragms are not required.

✱✱ NOTE: Locate lifting device as necessary for safe handling.

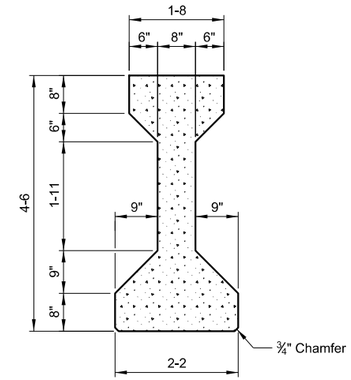

SECTION A

NOTES

SPECIFICATIONS: For design specifications, see General Layout. Design and fabricate the beam to support the dead load and live load stresses and provide a minimum ultimate moment capacity shown on the Erection Plan. Show stresses in the beam under each loading condition that is anticipated in the manufacture, handling and service life of the beam.

PRESTRESSING STEEL: Use 0.500" diameter or 0.600" diameter, 7 wire strand prestressing steel.

HARDWARE: Threaded inserts, hold down devices, lifting devices and any other hardware which is to be incorporated in the beam will be approved by the Engineer before fabrication is begun.

DIAPHRAGMS: See Erection Plan for location of diaphragms when structure is skewed.

BEAM LENGTH: Increase the overall length of the beam 0.0075 inches per foot of length to allow for elastic shortening, shrinkage and creep.

SHOES: Paint shoes according to Standard Specifications. See details on Bridge Plans if expansion shoes are required. See General Layout for type of shoes required.

REINFORCING STEEL: See General Layout.

SHEAR REINFORCING: The shear and end reinforcement shown on this drawing is the Department's minimum. Increase reinforcing if needed to meet the requirements of the AASHTO code specified on the General layout.

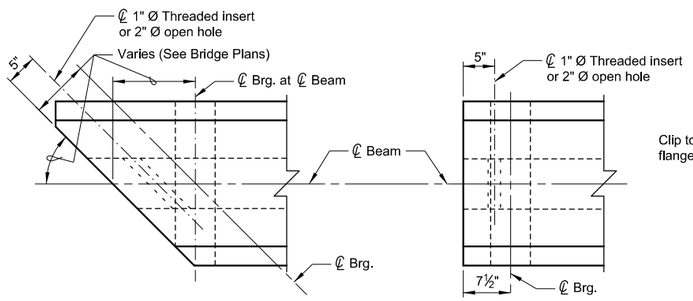

SKEWED BRIDGE

SQUARE BRIDGE

BEAM END DETAILS

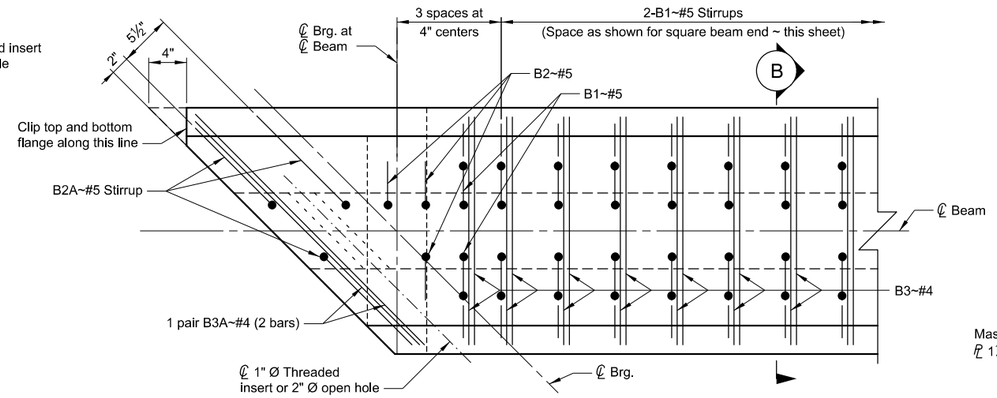

PLAN VIEW ~ SKEWED BEAM END

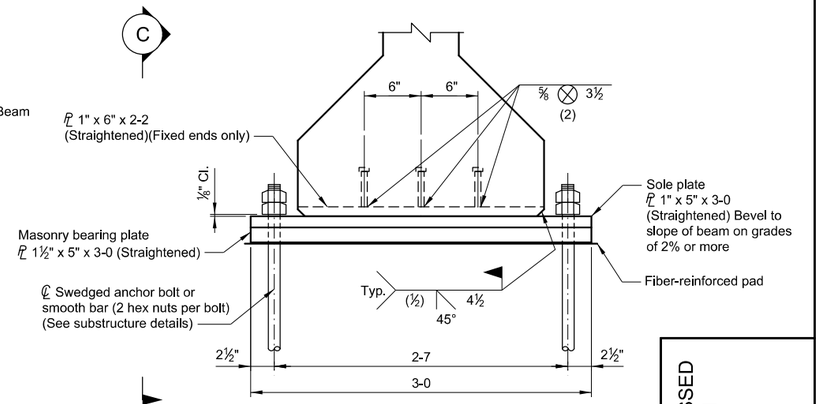

END VIEW

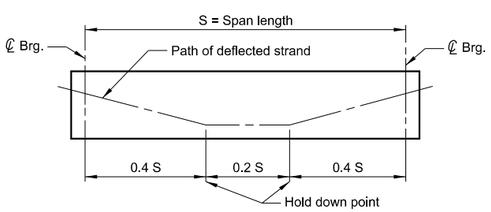

TYPICAL DEFLECTED STRAND FOR PRE-TENSIONING SYSTEM

NOTE: Use structural steel meeting the requirements of AASHTO M 270 Grade 36 for embedded plates and shoes. Use structural steel meeting the requirements of AASHTO M 314 Grade 36 for anchor bolts. Galvanize the anchor bolts meeting the requirements of AASHTO M 232. Use headed shear studs meeting the requirments of AASHTO M 169 Grades 1010 through 1020.

NOTE: Include all costs to furnish and install anchor bolts, nuts, shoes, fiber reinforced pads and embedded plates in the unit price bid for Prestressed Beams ~ Type IV.

NOTE: See substructure details for length and size of anchor bolts.

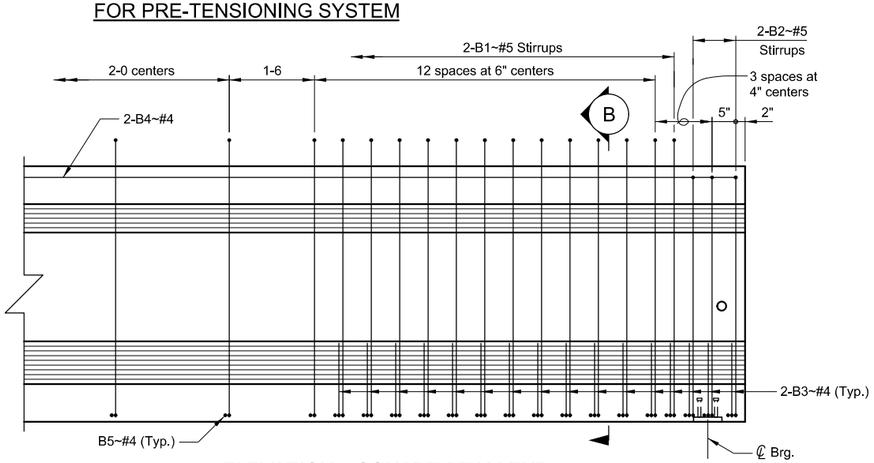

ELEVATION ~ SQUARE BEAM END

NOTE: Modify standard reinforcing steel to clear 4" x 8" notch as required.

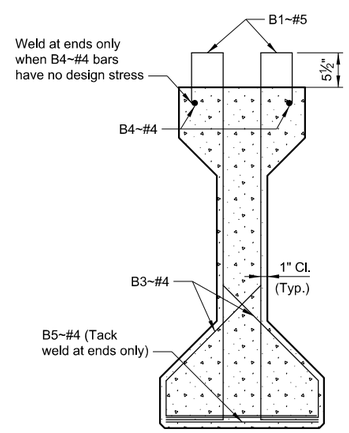

SECTION B

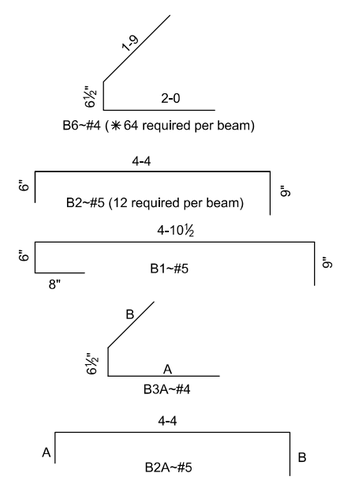

NOTE: The number of B2A~#5 stirrups required per beam varies due to varying skew.

NOTE: Length of A and B varies due to varying skew.

✱ NOTE: Number shown is for square beam ends. Number required for skewed beam ends varies.

NOTE: For the number of B1~#5 stirrups required per beam, use the following equation:
N = ((S - 17) / 2 + 29) x 2

If the result of the equation is an odd number, round to the next largest even whole number.

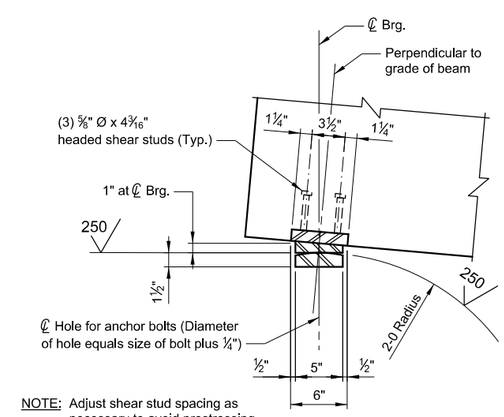

NOTE: Adjust shear stud spacing as necessary to avoid prestressing steel.

VIEW C

FIXED SHOE DETAILS

STANDARD PRESTRESSED CONCRETE BEAM TYPE IV

No Scale

MDT MONTANA DEPARTMENT OF TRANSPORTATION

BRIDGE BUREAU

REVISED		
REVISED		
REVISED		
REVISED	2-25-15	D.F.J.
APPROVED	11-12-08	D.F.J.
CHECKED	6-23-08	J.S.O.
DRAWN	3-5-08	T.J.B.
$DATES	$TIMES	$FILEABBREVS

DRAWING NO. B-4

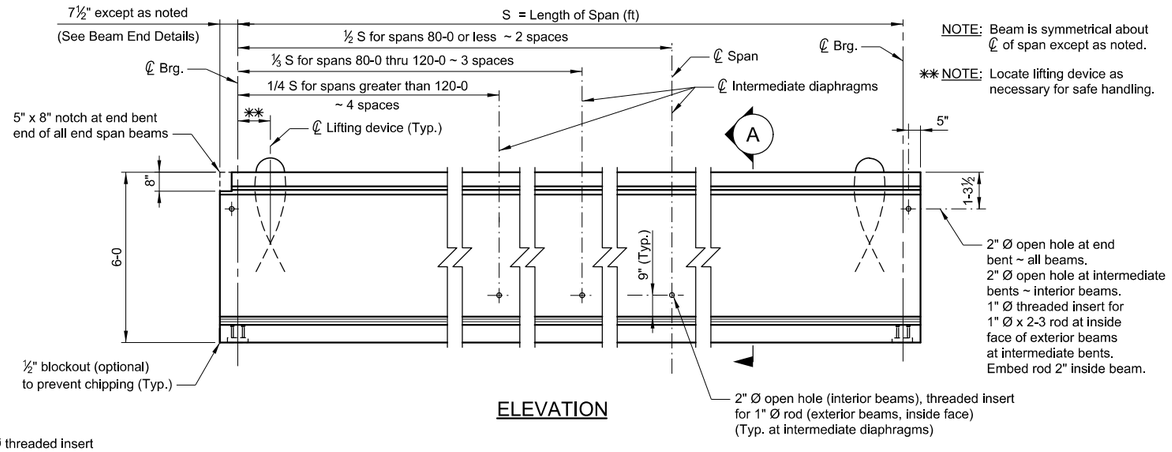

NOTE: Beam is symmetrical about ℄ of span except as noted.

✱✱ NOTE: Locate lifting device as necessary for safe handling.

ELEVATION

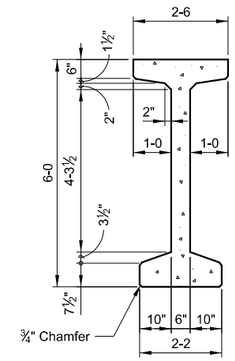

SECTION A

NOTES

SPECIFICATIONS: For design specifications, see General Layout. Design and fabricate the beam to support the dead load and live load stresses and provide a minimum ultimate moment capacity shown on the Erection Plan. Show stresses in the beam under each loading condition that is anticipated in the manufacture, handling and service life of the beam.

PRESTRESSING STEEL: Use 0.500" diameter or 0.600" diameter, 7 wire strand prestressing steel.

HARDWARE: Threaded inserts, hold down devices, lifting devices and any other hardware which is to be incorporated in the beam will be approved by the Engineer before fabrication is begun.

DIAPHRAGMS: See Erection Plan for location of diaphragms when structure is skewed.

BEAM LENGTH: Increase the overall length of the beam 0.0075 inches per foot of length to allow for elastic shortening, shrinkage and creep.

SHOES: Paint shoes according to Standard Specifications. See details on Bridge Plans if expansion shoes are required. See General Layout for type of shoes required.

REINFORCING STEEL: See General Layout.

SHEAR REINFORCING: The shear and end reinforcement shown on this drawing is the Department's minimum. Increase reinforcing if needed to meet the requirements of the AASHTO code specified on the General layout.

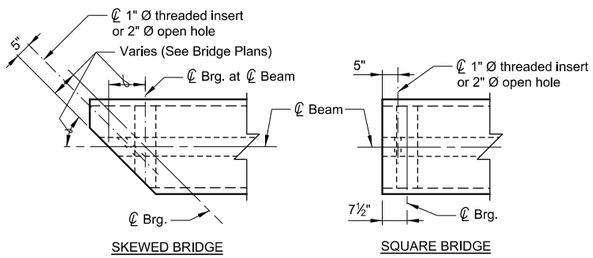

BEAM END DETAILS

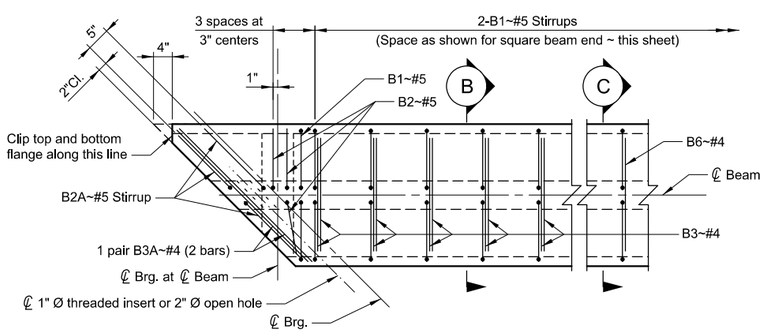

PLAN VIEW ~ SKEWED BEAM END

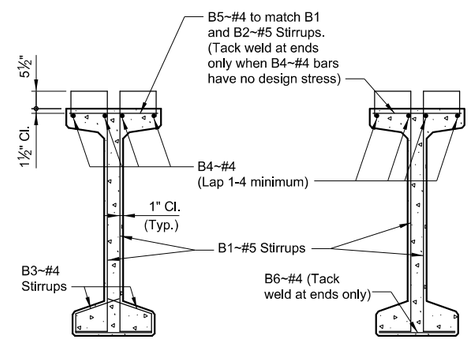

SECTION B

SECTION C

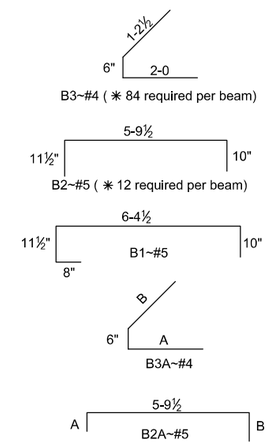

✱ NOTE: Number shown is for square beam ends. Number required for skewed beam ends varies.

NOTE: The number of B2A~#5 stirrups required per beam varies due to varying skew.

NOTE: Length of A and B varies due to varying skew.

NOTE: Use the following equation to determine the number of B1~#5 stirrups required per beam:
N = ((S - 18) / 2 + 37) x 2

If the result of the equation is an odd number, round to the next largest even whole number.

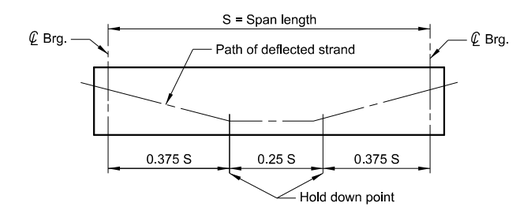

TYPICAL DEFLECTED STRAND FOR PRE-TENSIONING SYSTEM

NOTE: Use structural steel meeting the requirements of AASHTO M 270 Grade 36 for embedded plates and shoes. Use structural steel meeting the requirements of AASHTO M 314 Grade 36 for anchor bolts. Galvanize the anchor bolts meeting the requirements of AASHTO M 232. Use headed shear studs meeting the requirements of AASHTO M 169 Grades 1010 through 1020.

NOTE: Include all costs to furnish and install anchor bolts, nuts, shoes, fiber-reinforced pads and embedded plates in the unit price bid for Prestressed Beams ~ Type M-72.

NOTE: See substructure details for length and size of anchor bolts.

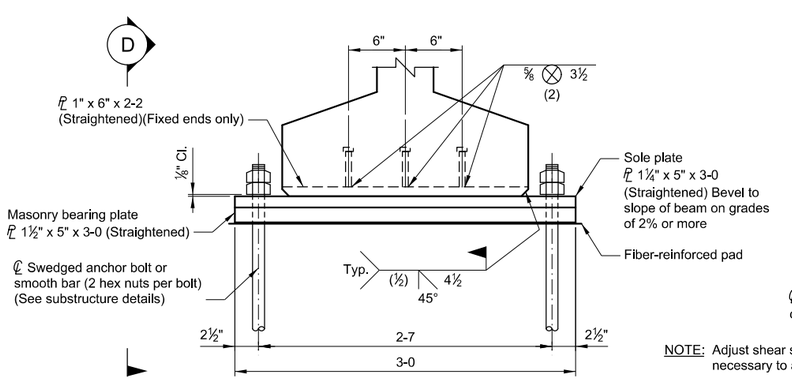

END VIEW

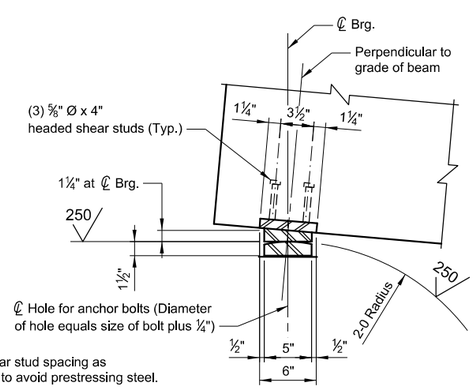

NOTE: Adjust shear stud spacing as necessary to avoid prestressing steel.

VIEW D

FIXED SHOE DETAILS

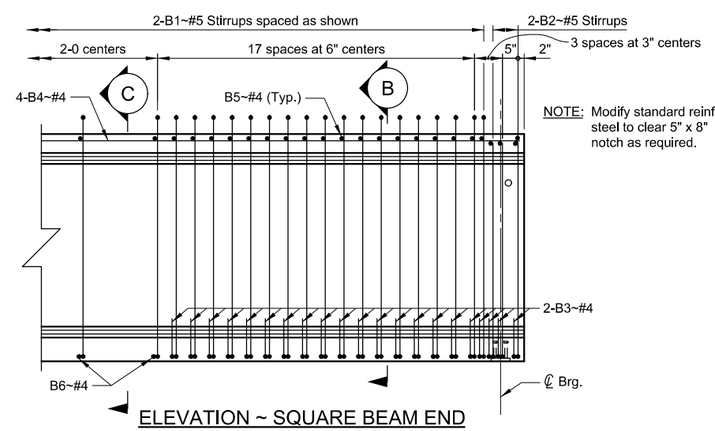

NOTE: Modify standard reinforcing steel to clear 5" x 8" notch as required.

ELEVATION ~ SQUARE BEAM END

STANDARD PRESTRESSED CONCRETE BEAM TYPE M-72

No Scale

MDT MONTANA DEPARTMENT OF TRANSPORTATION

BRIDGE BUREAU

REVISED		
REVISED		
REVISED		
REVISED	2-25-15	D.F.J.
APPROVED	2-1-08	D.F.J.
CHECKED	12-21-07	J.S.O.
DRAWN	9-21-07	T.J.B.
$DATE$	$TIME$	$FILEABBREV$

DRAWING NO. M-72

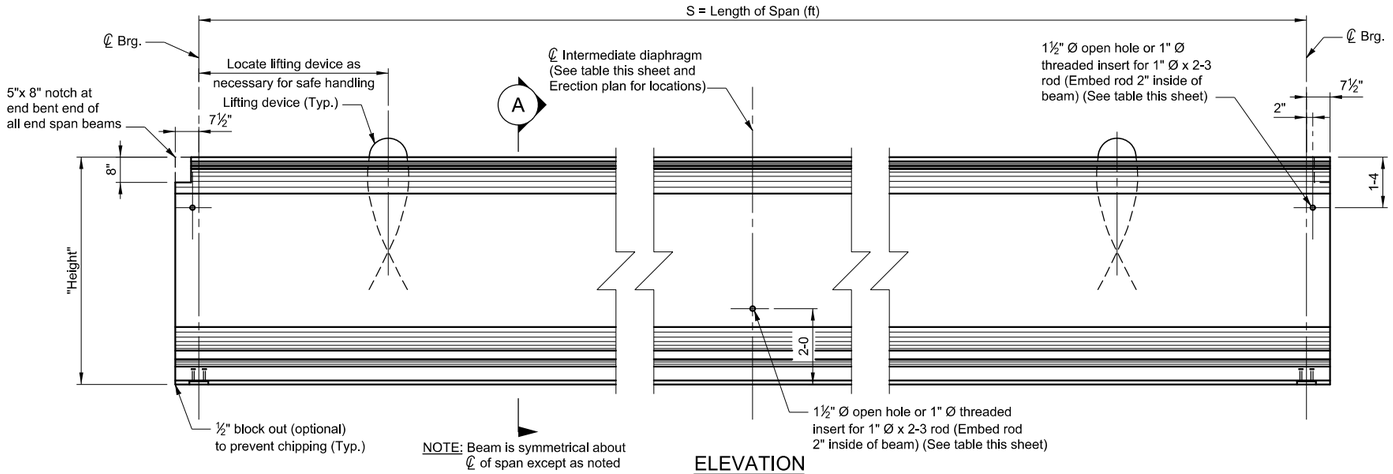

NOTE: Beam is symmetrical about ℄ of span except as noted

ELEVATION

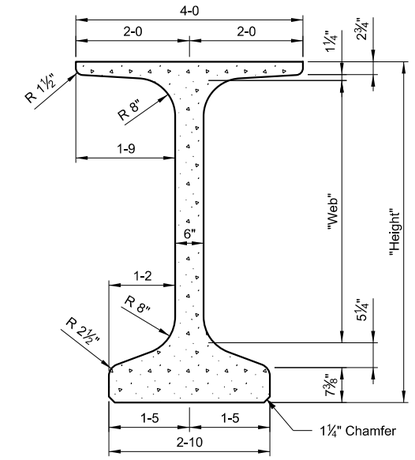

SECTION A

NOTES

SPECIFICATIONS: For design specifications, see General Layout. Design and fabricate the beam to support the dead load and live load stresses and provide a minimum ultimate moment capacity shown on the Erection Plan. Show stresses in the beam under each loading condition that is anticipated in the manufacture, handling and service life of the beam.

PRESTRESSING STEEL: Use 0.500" diameter or 0.600" diameter, 7 wire strand prestressing steel.

HARDWARE: Threaded inserts, hold down devices, lifting devices and any other hardware which is to be incorporated in the beam will be approved by the Engineer before fabrication is begun.

DIAPHRAGMS: See Erection Plan for location of diaphragms when structure is skewed.

BEAM LENGTH: Increase the overall length of the beam to allow for elastic shortening, shrinkage and creep.

SHOES: Paint shoes in accordance to Standard Specifications. See details on Bridge Plans if expansion shoes are required. See General layout for type of shoes required.

REINFORCING STEEL: See General Layout. The suffix E donotes epoxy coated reinforcing.

SHEAR REINFORCING: Fabricator will provide shear and end reinforcement to meet the requirements of the AASHTO code specified on the General Layout.

PAYMENT: Include all costs to furnish and install anchor bolts, nuts, smooth bars, metal expansion caps, shoes, fiber-reinforced pads and embedded plates in the unit price bid for Prestressed Beams Type MTS.

STRUCTURAL STEEL: Use structural steel meeting the requirements of AASHTO M 270 Grade 36 for embedded plates, smooth bars and shoes. Use structural steel meeting the requirements of AASHTO M 314 Grade 55 for anchor bolts. Galvanize the anchor bolts meeting the requirements of AASHTO M 232. Use headed shear studs meeting the requirements of AASHTO M 169 Grades 1010 through 1020.

HORIZONTAL INTERFACE SHEAR REINFORCEMENT: Fabricator will provide spacing that meets the requirements of the AASHTO code specified on the General Layout.

MONTANA SUPER GIRDER PROPERTIES

NAME	Girder Depth "Height"	"Web"	A (in²)	Ycg (in)	Ixo (in⁴)	Sx (Top) (in³)	Sx (Bot) (in³)	Weight (lb/ft)
MTS-36	36"	19⅜"	670	16.44	112 100	5 732	6 818	700
MTS-45	45"	28⅜"	724	20.28	197 679	7 998	9 746	755
MTS-54	54"	37⅜"	778	24.22	312 050	10 477	12 886	810
MTS-63	63"	46⅜"	832	28.22	457 505	13 155	16 210	865
MTS-72	72"	55⅜"	886	32.29	636 312	16 024	19 706	925
MTS-81	81"	64⅜"	940	36.41	850 718	19 077	23 368	980
MTS-96	96"	79⅜"	1030	43.36	1 293 240	24 566	29 829	1075

DIAPHRAGM LOCATIONS

SPAN LENGTH	DIAPHRAGM LOCATION
0 - 40 ft	NONE
40 - 80 ft	½ S
80 - 120 ft	⅓ S
120 - 160 ft	¼ S
greater than 160 ft	See Erection Plan

ANCHOR BOLT DIAMETERS

SPAN LENGTH	ANCHOR BOLT OR SMOOTH BAR DIAMETER	EXPANSION CAP DIAMETER
0 - 50 ft	1"	1⅛"
50 - 100 ft	1¼"	1⅜"
100 - 150 ft	1½"	1⅝"
greater than 150 ft	1¾"	1⅞"

WEB THREADED INSERT / HOLE

CONDITION	EXTERIOR BEAM	INTERIOR BEAM
End Bent Fixed Bearing	Open Hole	Open Hole
End Bent Exp Bearing	Threaded Insert	Open Hole
Intermediate Bent	Threaded Insert	Open Hole
Intermediate Diaphragm	Threaded Insert	Open Hole

NOTE: Place threaded inserts at diaphragm face of beam only.

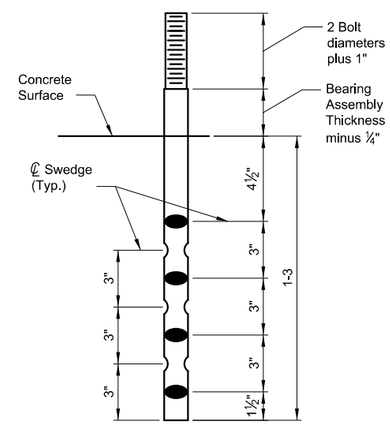

NOTE: Make swedge deformations 3/16" deep minimum without removing metal.

ANCHOR BOLT DETAIL

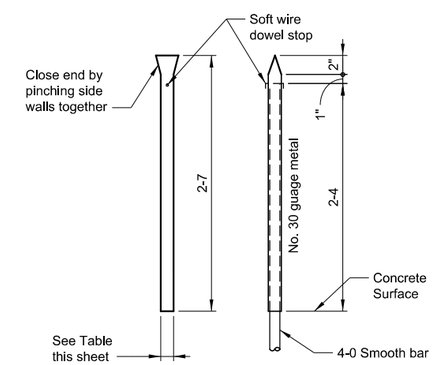

METAL EXPANSION CAP DETAIL

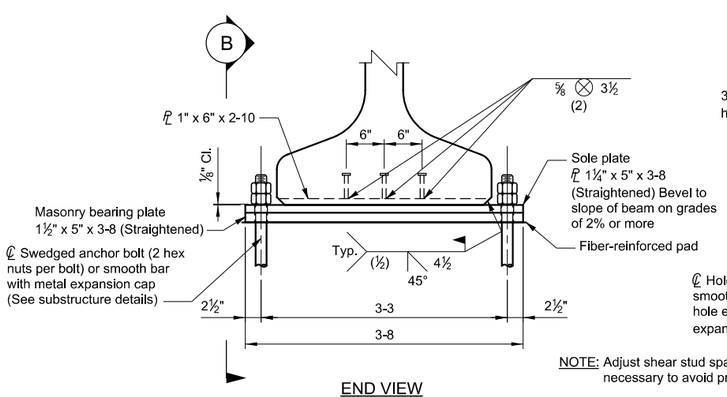

END VIEW

NOTE: Adjust shear stud spacing as necessary to avoid prestressing steel.

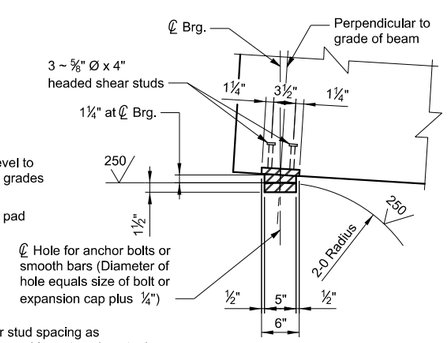

VIEW B

FIXED BEARING DETAILS

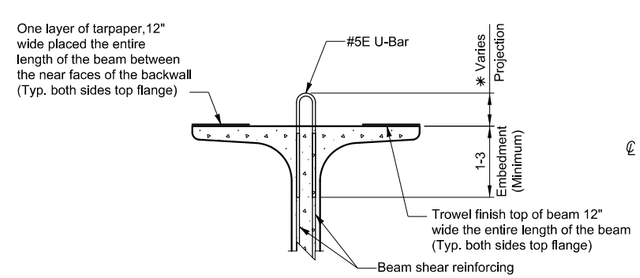

HORIZONTAL INTERFACE SHEAR REINFORCEMENT

✱NOTE: Extend horizontal interface shear reinforcement such that is located between top and bottom deck mat reinforcing layers.

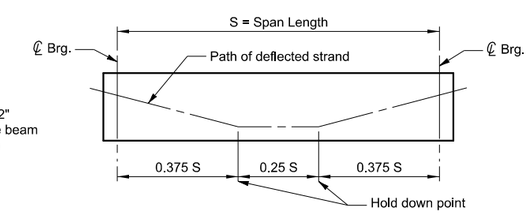

TYPICAL DEFLECTED STRAND FOR PRE-TENSIONING SYSTEM

STANDARD PRESTRESSED CONCRETE BEAM TYPE MTS

No Scale

MDT MONTANA DEPARTMENT OF TRANSPORTATION — BRIDGE BUREAU

REVISED			
REVISED			
REVISED			
REVISED	5-20-14	D.F.J.	
APPROVED	3-6-12	D.F.J.	
CHECKED	3-6-12	D.F.J.	
DRAWN	3-6-12	T.J.B.	
$DATE$	$TIME$	$FILEABBREV$	

DRAWING NO. MTS

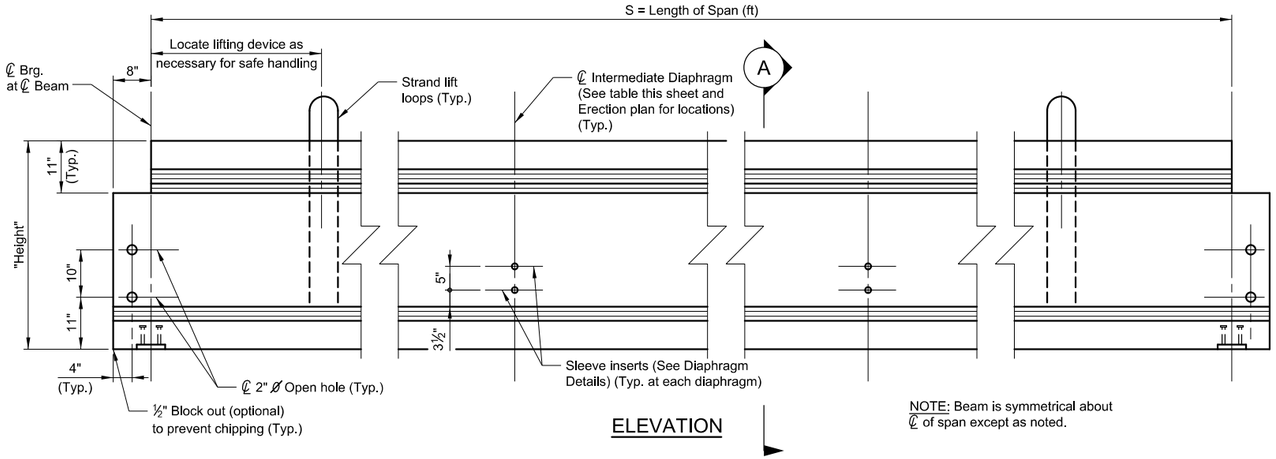

ELEVATION

NOTE: Beam is symmetrical about ℄ of span except as noted.

ANCHOR BOLT DIAMETERS		
SPAN LENGTH	ANCHOR BOLT OR SMOOTH BAR DIAMETER	EXPANSION CAP DIAMETER
0 - 40 ft	1"	1⅛"
40 - 80 ft	1¼"	1⅜"
80 - 120 ft	1½"	1⅝"
greater than 120 ft	1¾"	1⅞"

DIAPHRAGM LOCATIONS	
SPAN LENGTH	DIAPHRAGM LOCATION
0 - 40 ft	NONE
40 - 80 ft	½ S
80 - 120 ft	⅓ S
120 - 160 ft	¼ S
greater than 160 ft	See Erection Plan

NOTES

SPECIFICATIONS: For design specifications, see General Layout. Design and fabricate the beam to support the dead load and live load stresses and provide a minimum ultimate moment capacity shown on the Erection Plan. Show stresses in the beam under each loading condition that is anticipated in the manufacture, handling and service life of the beam.

PRESTRESSING STEEL: Use 0.500" diameter or 0.600" diameter, 7 wire strand prestressing steel.

HARDWARE: Threaded inserts, hold down devices, lifting devices and any other hardware which is to be incorporated in the beam will be approved by the Engineer before fabrication is begun.

DIAPHRAGMS: See Erection Plan for location of diaphragms when structure is skewed.

BEAM LENGTH: Increase the overall length of the beam to allow for elastic shortening, shrinkage and creep.

SHOES: Paint shoes in accordance to Standard Specifications. See details on Bridge Plans if expansion shoes are required. See General layout for type of shoes required.

REINFORCING STEEL: See General Layout. The suffix E donotes epoxy coated reinforcing.

SHEAR REINFORCING: Fabricator will provide shear and end reinforcement to meet the requirements of the AASHTO code specified on the General Layout.

PAYMENT: Include all costs to furnish and install anchor bolts, nuts, smooth bars, metal expansion caps, shoes, fiber-reinforced pads and embedded plates in the unit price bid for Prestressed Beams Type Bulb - Tee.

STRUCTURAL STEEL: Use structural steel meeting the requirements of AASHTO M 270 Grade 36 for embedded plates, smooth bars and shoes. Use structural steel meeting the requirements of AASHTO M 314 Grade 55 for anchor bolts. Galvanize the anchor bolts meeting the requirements of AASHTO M 232. Use headed shear studs meeting the requirements of AASHTO M 169 Grades 1010 through 1020.

FABRICATOR NOTE: Include an allowance for 2⅜" of asphalt surfacing in lieu of the usual 10 pounds per square foot. Apply rail loads to the exterior beam only. Broom finish the top surface of the beam in accordance with Subsection 552.03.12(C) of the Standard Specifications.

VARIATIONS: Variations in the general shape of the deck width or span lengths from those shown on the Bridge drawings are not allowed without the approval of the Engineer. Obtain approval from the Engineer for any variation requiring the alteration of backwall, diaphragm and sleeve spaces as shown on the Bridge drawings.

DIMENSIONS: See Erection Plan varying dimensions shown in Section A.

ERECTION: Hold all galvanized ipe sleeves in accurate position while placing concrete for the beam.

BRIDGE RAIL: See Bridge Plans for the type of rail used and for any anchorages and rienfrocing incorperated into the beam.

NOTE: Provide ⅝" Ø threaded inserts. Match the rail post spacing (Typ. both sides). Offset the insert longitudinally to avoid the embedded rail post plate and reinforcing. Minimum safe tension working load (capacity) for inserts is 2000 pounds. Include the cost of the inserts in the unit price bid for Prestressed Beam - Bulb Tee.

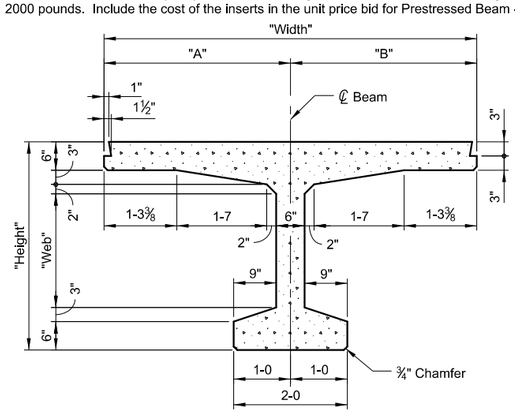

SECTION A INTERIOR BEAM

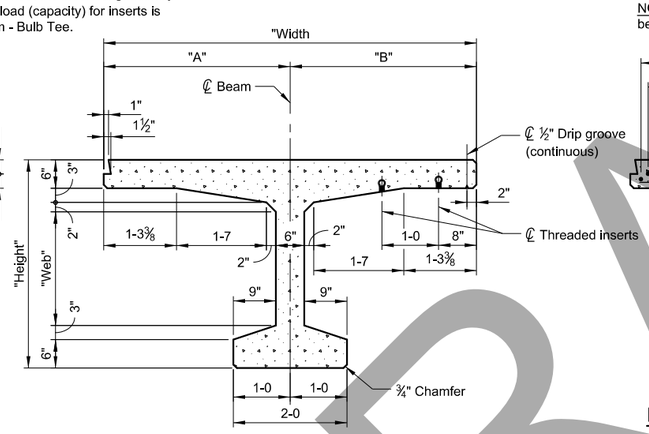

SECTION A EXTERIOR BEAM

NOTE: Extend top longitudinal bars 2-6 beyond end of beam at end bents.

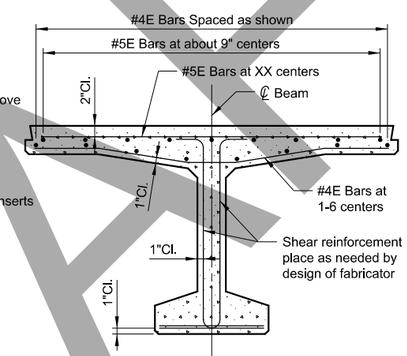

REINFORCING PLACEMENT DETAIL

Interior Beam reinforcing steel shown
Exterior Beam reinforcing steel similar

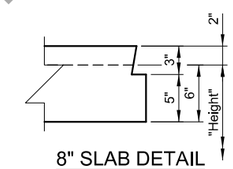

8" SLAB DETAIL

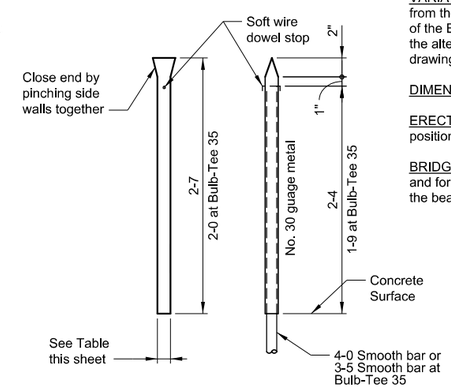

METAL EXPANSION CAP DETAIL

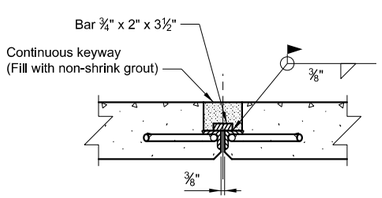

SECTION B

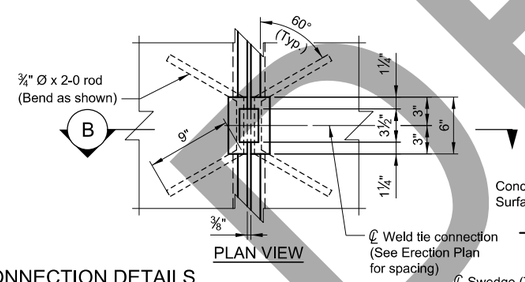

PLAN VIEW

WELD TIE CONNECTION DETAILS

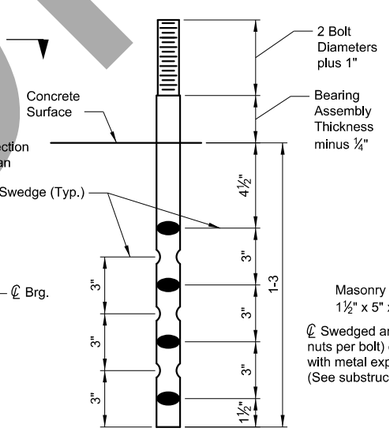

Make swedge deformations 3/16" deep minimum without removing metal.

ANCHOR BOLT DETAIL

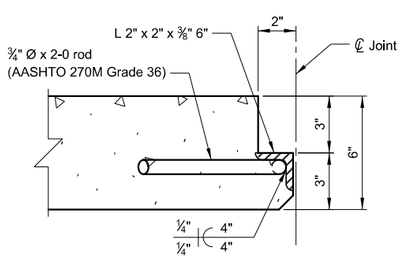

BULB TEE JOINT CONNECTION DETAIL

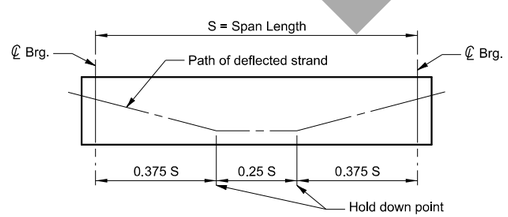

TYPICAL DEFLECTED STRAND FOR PRE-TENSIONING SYSTEM

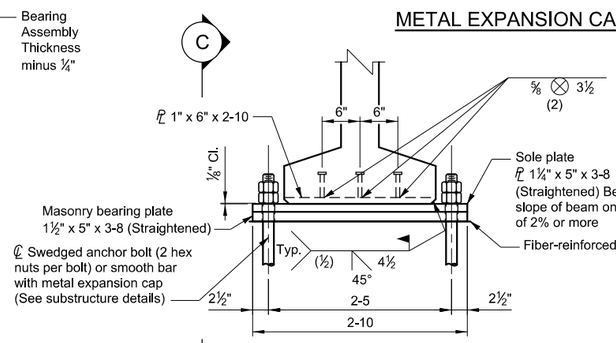

END VIEW

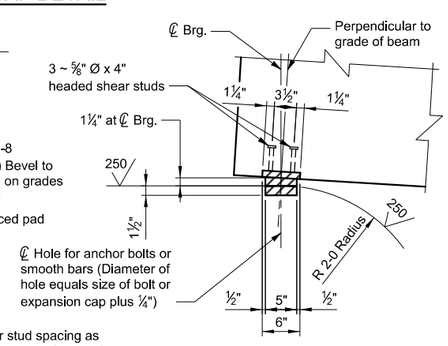

NOTE: Adjust shear stud spacing as necessary to avoid prestressing steel.

VIEW C

FIXED BEARING DETAILS

STANDARD PRESTRESSED CONCRETE BEAM
TYPE BULB-TEE
PRELIMINARY
No Scale

MDT MONTANA DEPARTMENT OF TRANSPORTATION
BRIDGE BUREAU

REVISED							
REVISED							
REVISED							
REVISED							
APPROVED	XX-XX-XX	X.X.X.					
CHECKED	XX-XX-XX	X.X.X.					
DRAWN	3-15-17	T. J. B.					
$DATE$	$TIME$	$FILEABBREV$					

DRAWING NO.
BTE

DRAFT

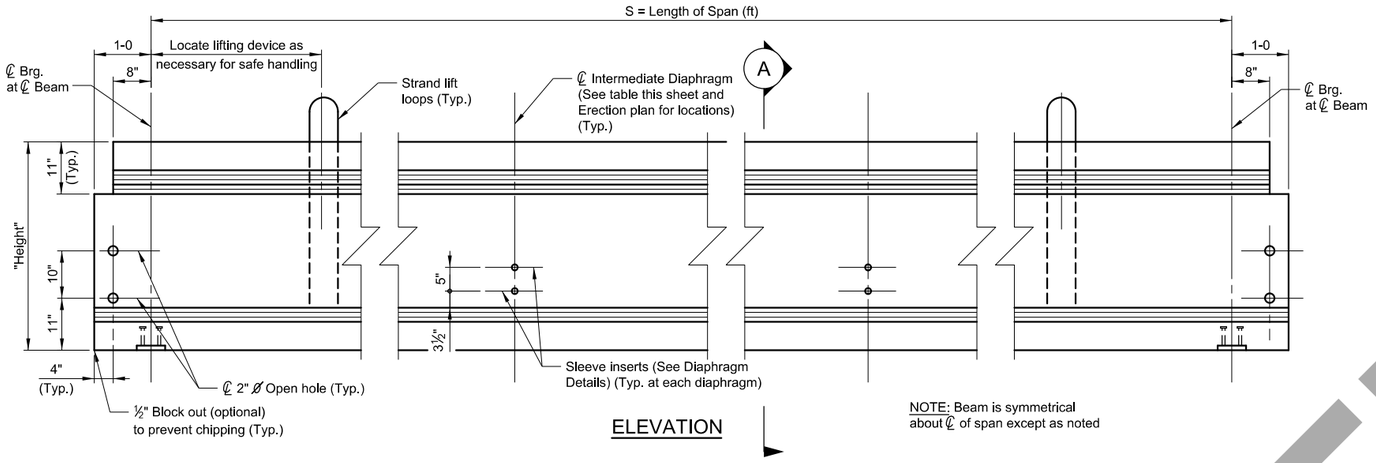

ELEVATION

NOTE: Beam is symmetrical about ℄ of span except as noted

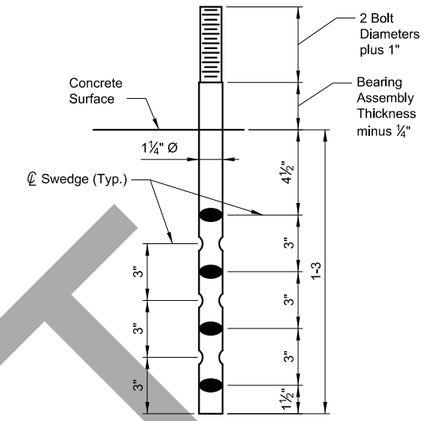

NOTE: Make swedge deformations 3/16" deep minimum without removing metal.

ANCHOR BOLT DETAIL

NOTE: Provide ⅝" Ø threaded inserts. Match the rail post spacing (Typ. both sides). Offset the insert longitudinally to avoid the embedded rail post plate and reinforcing. Minimum safe tension working load (capacity) for inserts is 2000 pounds. Include the cost of the inserts in the unit price bid for Prestressed Beam - Bulb Tee.

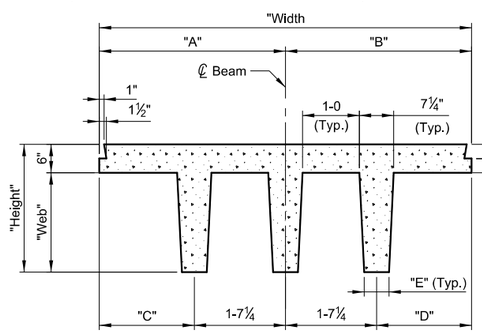

SECTION A INTERIOR BEAM

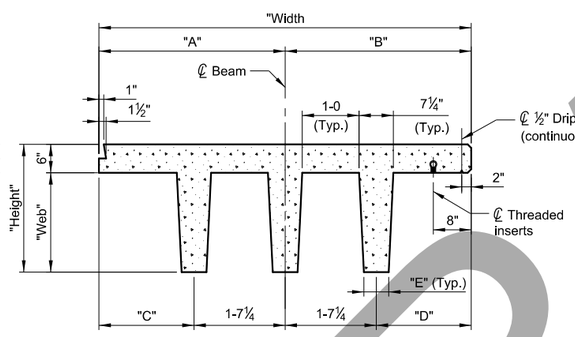

SECTION A EXTERIOR BEAM

NOTE: Extend top longitudinal bars 2-6 beyond end of beam at end bents.

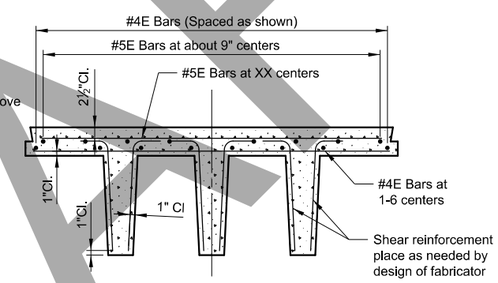

REINFORCING PLACEMENT DETAIL

Interior Beam reinforcing steel shown
Exterior Beam reinforcing steel similar

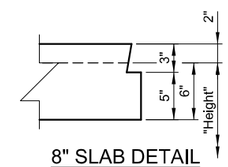

8" SLAB DETAIL

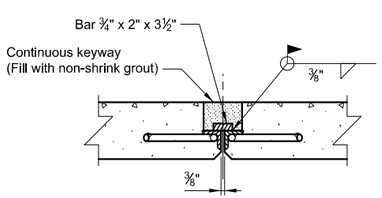

SECTION B

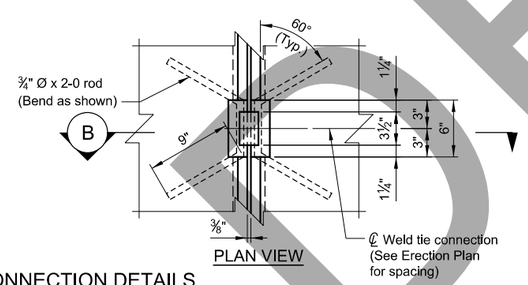

PLAN VIEW

WELD TIE CONNECTION DETAILS

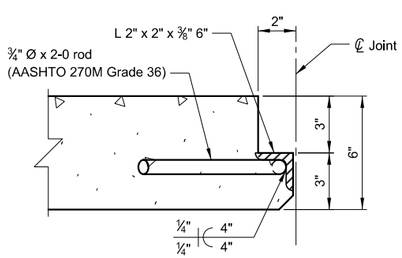

BULB TEE JOINT CONNECTION DETAIL

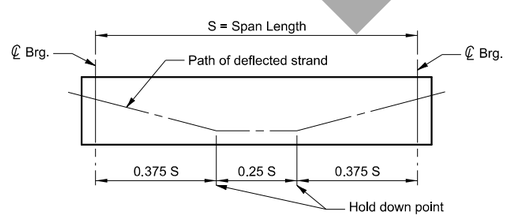

TYPICAL DEFLECTED STRAND FOR PRE-TENSIONING SYSTEM

NOTES

SPECIFICATIONS: For design specifications, see General Layout. Design and fabricate the beam to support the dead load and live load stresses and provide a minimum ultimate moment capacity shown on the Erection Plan. Show stresses in the beam under each loading condition that is anticipated in the manufacture, handling and service life of the beam.

PRESTRESSING STEEL: Use 0.500" diameter or 0.600" diameter, 7 wire strand prestressing steel.

HARDWARE: Threaded inserts, hold down devices, lifting devices and any other hardware which is to be incorporated in the beam will be approved by the Engineer before fabrication is begun.

BEAM LENGTH: Increase the overall length of the beam to allow for elastic shortening, shrinkage and creep.

SHOES: Paint shoes in accordance to Standard Specifications. See details on Bridge Plans if expansion shoes are required. See General layout for type of shoes required.

REINFORCING STEEL: See General Layout. The suffix E donotes epoxy coated reinforcing.

SHEAR REINFORCING: Fabricator will provide shear and end reinforcement to meet the requirements of the AASHTO code specified on the General Layout.

PAYMENT: Include all costs to furnish and install anchor bolts, nuts, smooth bars, metal expansion caps, shoes, fiber-reinforced pads and embedded plates in the unit price bid for Prestressed Beams Type Tri - Deck.

STRUCTURAL STEEL: Use structural steel meeting the requirements of AASHTO M 270 Grade 36 for embedded plates, smooth bars and shoes. Use structural steel meeting the requirements of AASHTO M 314 Grade 55 for anchor bolts. Galvanize the anchor bolts meeting the requirements of AASHTO M 232. Use headed shear studs meeting the requirements of AASHTO M 169 Grades 1010 through 1020.

FABRICATOR NOTE: Include an allowance for 2⅜" of asphalt surfacing in lieu of the usual 10 pounds per square foot. Apply rail loads to the exterior beam only. Broom finish the top surface of the beam in accordance with Subsection 552.03.12(C) of the Standard Specifications.

VARIATIONS: Variations in the general shape of the deck width of span lengths from those shown on the Bridge drawings are not allowed without the approval of the Engineer. Obtain approval from the Engineer for any variation requiring the alteration of backwall, diaphragm and sleeve spaces as shon on the Bridge drawings.

DIMENSIONS: See Erection Plan varying dimensions shown in Section A.

ERECTION: Hold all galvanized ipe sleeves in accurate position while placing concrete for the beam.

BRIDGE RAIL: See Bridge Plans for the type of rail used and for any anchorages and rienfrocing incorperated into the beam.

STANDARD PRESTRESSED CONCRETE BEAM
TYPE TRI - DECK
PRELIMINARY
No Scale

MDT MONTANA DEPARTMENT OF TRANSPORTATION
BRIDGE BUREAU

REVISED	
REVISED	
REVISED	
REVISED	
APPROVED	XX-XX-XX X.X.X.
CHECKED	XX-XX-XX X.X.X.
DRAWN	3-15-17 T. J.B.
$DATES	$TIMES $FILEABBREVS

DRAWING NO.
TRI

DRAFT

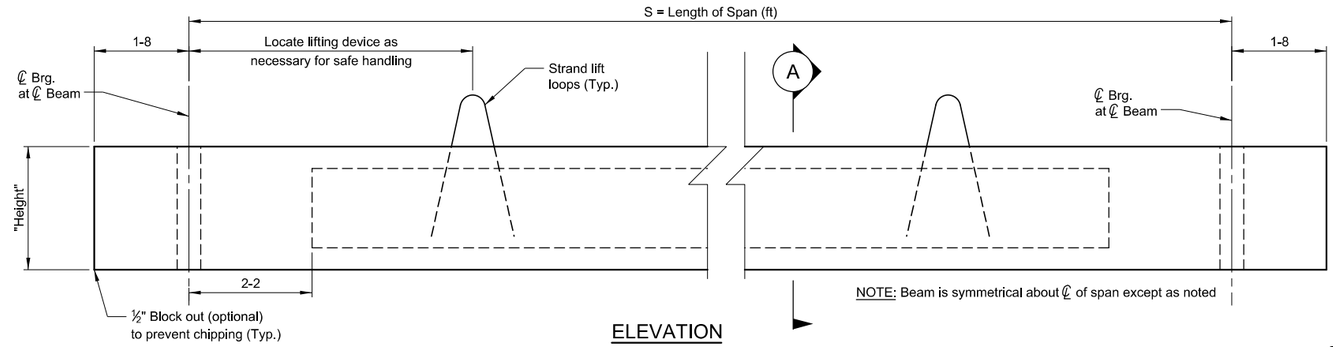

ELEVATION

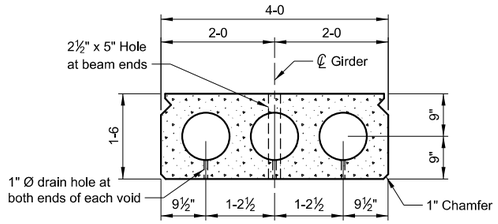

SECTION A INTERIOR BEAM

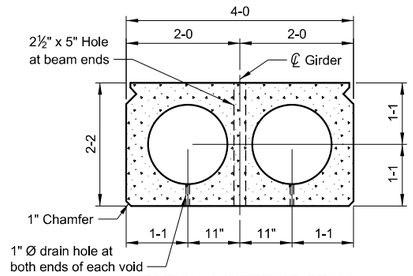

SECTION A INTERIOR BEAM

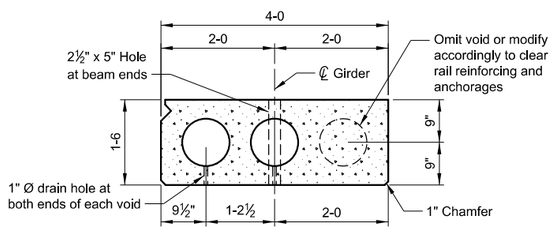

SECTION A EXTERIOR BEAM

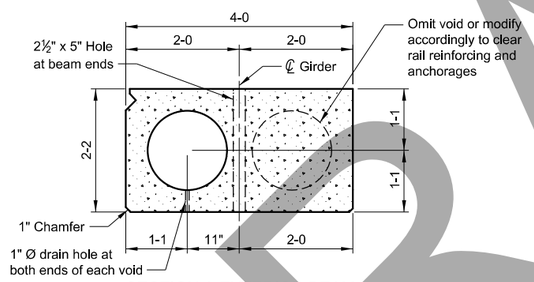

SECTION A EXTERIOR BEAM

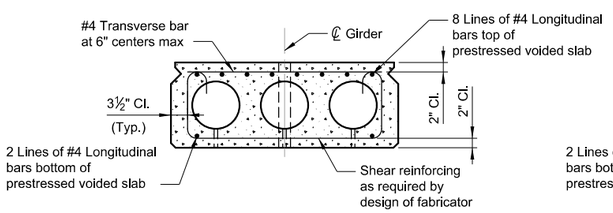

REINFORCING STEEL PLACEMENT DETAIL

Interior Beam reinforcing steel shown
Exterior Beam reinforcing steel similar

VOIDED SLAB 18

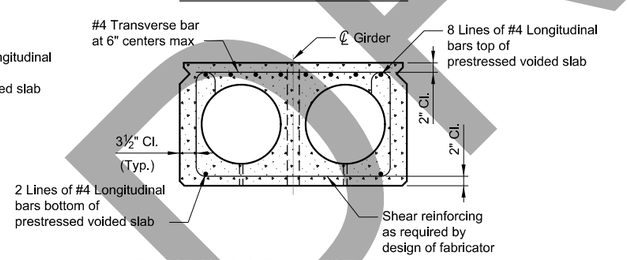

REINFORCING STEEL PLACEMENT DETAIL

Interior Beam reinforcing steel shown
Exterior Beam reinforcing steel similar

VOIDED SLAB 26

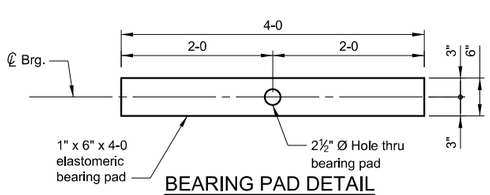

BEARING PAD DETAIL

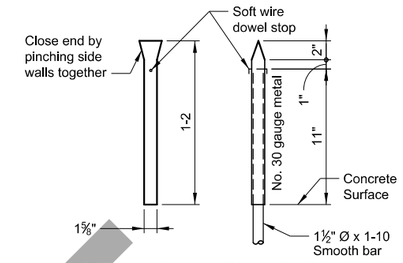

METAL EXPANSION CAP DETAIL

No Scale

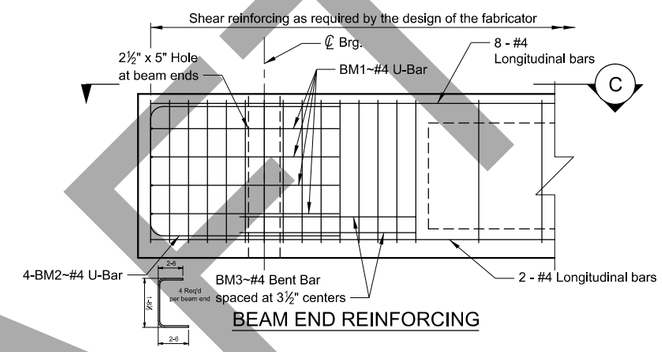

BEAM END REINFORCING

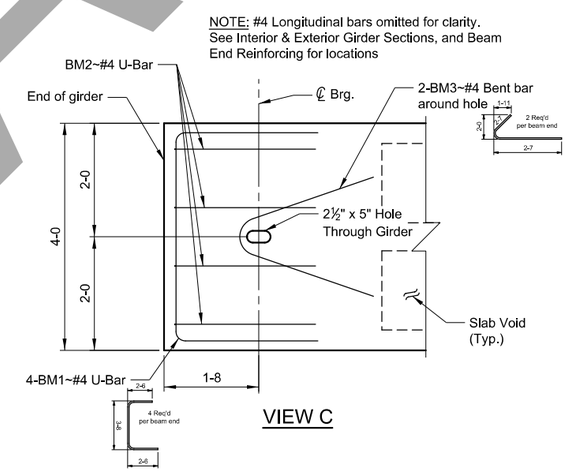

VIEW C

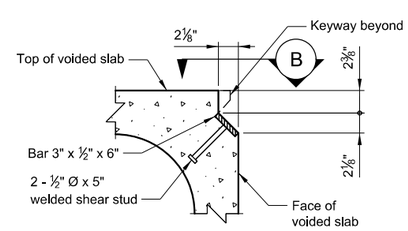

VOIDED SLAB CONNECTION DETAIL

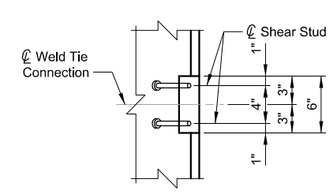

VIEW B

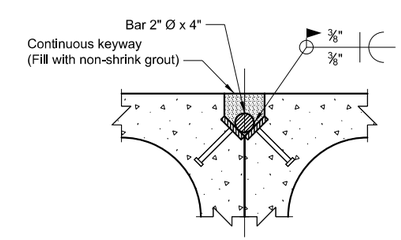

WELD TIE CONNECTION DETAILS

NOTES

SPECIFICATIONS: For design specifications, see General Layout. Design and fabricate the beam to support the dead load and live load stresses and provide a minimum ultimate moment capacity shown on the Erection Plan. Show stresses in the beam under each loading condition that is anticipated in the manufacture, handling and service life of the beam.

PRESTRESSING STEEL: Use 0.500" diameter or 0.600" diameter, 7 wire strand prestressing steel.

HARDWARE: Threaded inserts, hold down devices, lifting devices and any other hardware which is to be incorporated in the beam will be approved by the Engineer before fabrication is begun.

BEAM LENGTH: Increase the overall length of the beam to allow for elastic shortening, shrinkage and creep.

REINFORCING STEEL: See General Layout. The suffix E donotes epoxy coated reinforcing.

SHEAR REINFORCING: Fabricator will provide shear and end reinforcement to meet the requirements of the AASHTO code specified on the General Layout.

PAYMENT: Include all costs to furnish and install smooth bars and metal expansion caps in the unit price bid for Prestressed Beams Type Voided Slab.

STRUCTURAL STEEL: Use structural steel meeting the requirements of AASHTO M 270 Grade 36 for smooth bars. Use structural steel meeting the requirements of ASTM A276 Type 304 for all connection hardware. Use headed shear studs meeting the requirements of AASHTO M 169 Grades 1010 through 1020.

FABRICATOR NOTE: Include an allowance for 2⅜" of asphalt surfacing in lieu of the usual 10 pounds per square foot. Apply rail loads to the exterior beam only. Broom finish the top surface of the beam in accordance with Subsection 552.03.12(C) of the Standard Specifications.

VARIATIONS: Variations in the general shape of the deck width of span lengths from those shown on the Bridge drawings are not allowed without the approval of the Engineer. Obtain approval from the Engineer for any variation requiring the alteration of backwall, diaphragm and sleeve spaces as shon on the Bridge drawings.

BRIDGE RAIL: See Bridge Plans for the type of rail used and for any anchorages and rienfrocing incorperated into the beam.

DRAFT

STANDARD PRESTRESSED
CONCRETE BEAM
TYPE VOIDED SLAB
PRELIMINARY

No Scale

MDT
MONTANA DEPARTMENT OF TRANSPORTATION
BRIDGE BUREAU

REVISED					
REVISED					
REVISED					
REVISED					
APPROVED	XX-XX-XX	X.X.X.			
CHECKED	XX-XX-XX	X.X.X.			
DRAWN	3-15-17	T. J.B.			
$DATE$	$TIME$	$FILEABBREV$			

DRAWING NO.
VSL

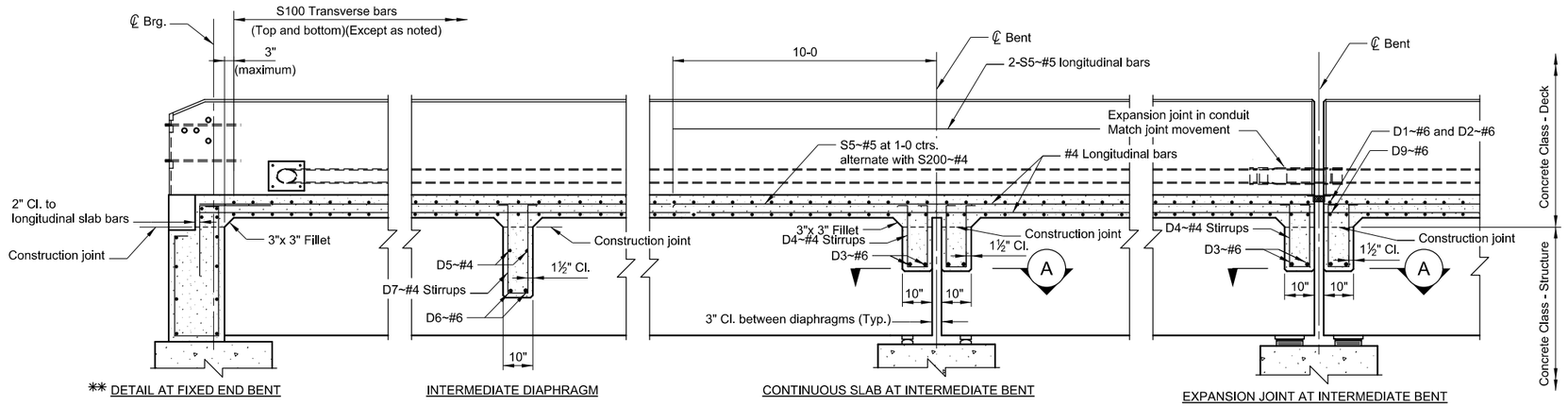

✻✻ DETAIL AT FIXED END BENT

INTERMEDIATE DIAPHRAGM

CONTINUOUS SLAB AT INTERMEDIATE BENT

EXPANSION JOINT AT INTERMEDIATE BENT

✻✻ NOTE: The detail for end bents with expansion joints is similar to the detail for an expansion joint at an intermediate bent.

LONGITUDINAL SECTION

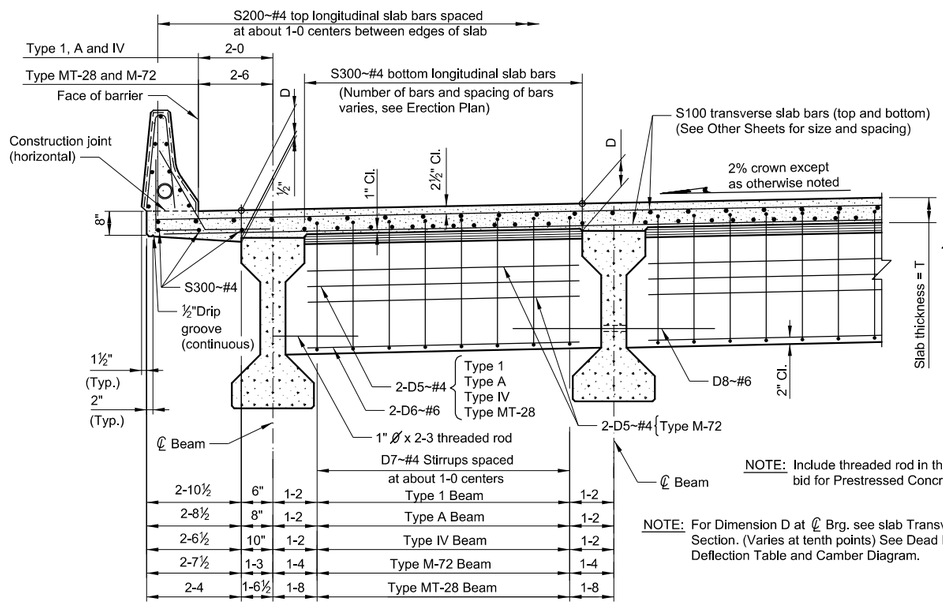

NOTE: Include threaded rod in the unit price bid for Prestressed Concrete Beams.

NOTE: For Dimension D at ℄ Brg. see slab Transverse Section. (Varies at tenth points) See Dead Load Deflection Table and Camber Diagram.

TRANSVERSE SECTION NEAR INTERMEDIATE DIAPHRAGM AT LOW SIDE

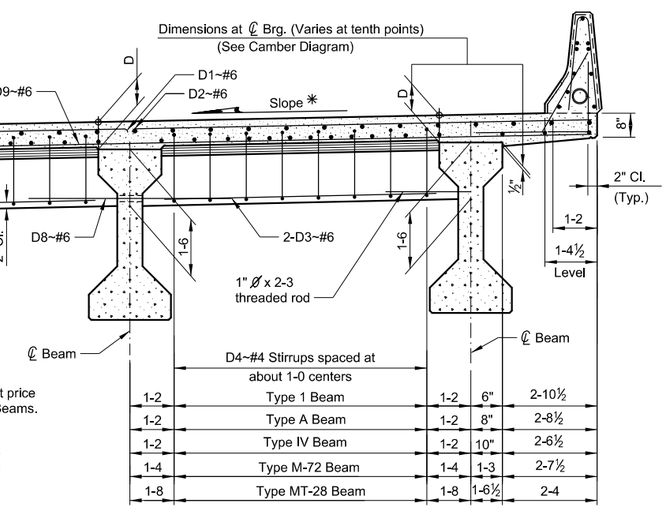

TRANSVERSE SECTION NEAR INTERMEDIATE BENT AT HIGH SIDE

✻ NOTE: Detail shown is for superelevations other than normal crown.

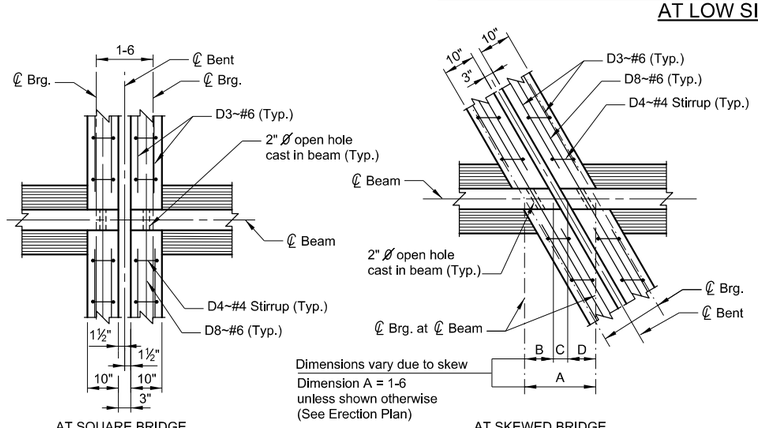

AT SQUARE BRIDGE

SECTION A

AT SKEWED BRIDGE

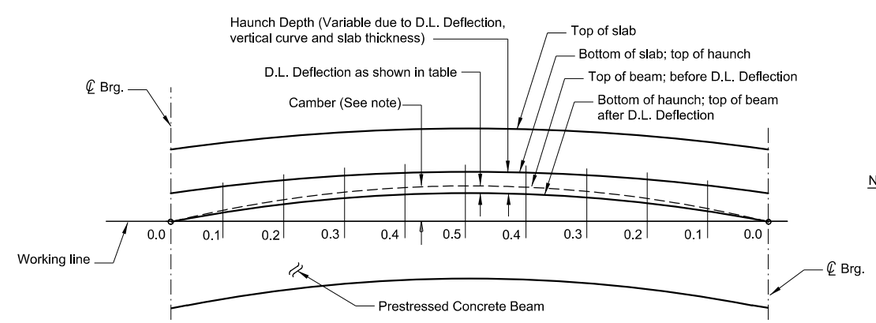

CAMBER DIAGRAM

NOTE: Camber is noted as the distance from the working line to the top of beam and may vary from theoretically calculated D.L. deflection.

NOTE: See Erection plan for theoretical D.L. Deflection Table for Prestressed Concrete Beams.

NOTES

Use details shown on this sheet only as they apply to the project. See the General Layout or Other Sheets for beam spacing, slab thickness, size and spacing of S100 bars, number and spacing of S200 and S300~#4 bars, deck joint arrangement, barrier length, bill of reinforcing steel and roadway width.

When adjoining spans have a different number of longitudinal slab bars, make the longitudinal bars of the shorter span continuous over the bent and extend them 3-0 into the longer span.

If the bridge is skewed, place the transverse slab reinforcing steel as shown on Other Sheets.

Do not place concrete barrier for at least 72 hours after concrete in slab has taken initial set.

See Standard Bridge Rail Type Barrier drawing for barrier details.

STANDARD SLAB, BARRIER AND DIAPHRAGM DETAILS

No Scale

MDT MONTANA DEPARTMENT OF TRANSPORTATION

BRIDGE BUREAU

REVISED	3-15-17	D.F.J.
REVISED	2-27-15	D.F.J.
REVISED	3-21-12	D.F.J.
APPROVED	3-26-08	D.F.J.
CHECKED	10-5-07	D.J.R.
DRAWN	10-3-07	T.J.B.
$DATE$	$TIME$	$FILEABBREV$

DRAWING NO.
SL-5

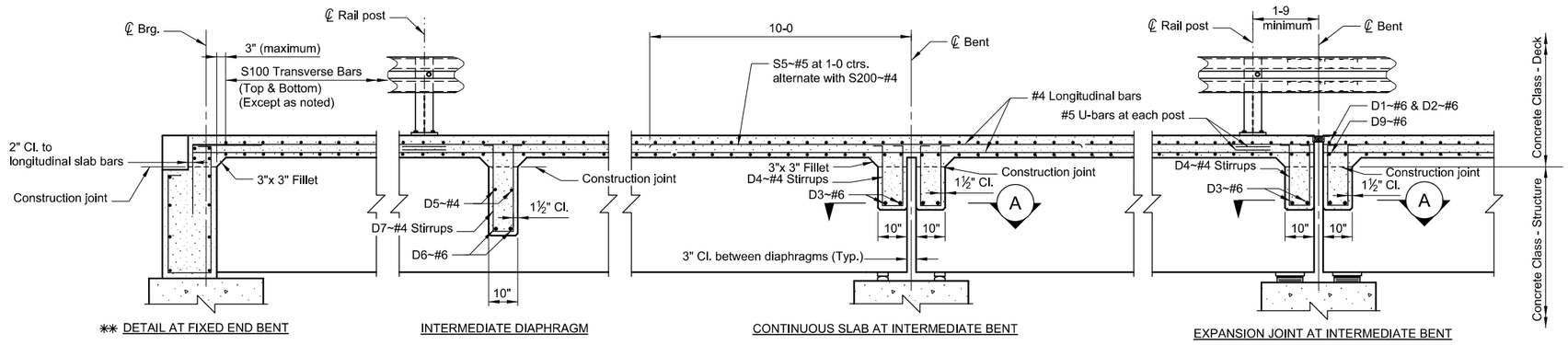

✱✱ DETAIL AT FIXED END BENT

INTERMEDIATE DIAPHRAGM

CONTINUOUS SLAB AT INTERMEDIATE BENT

EXPANSION JOINT AT INTERMEDIATE BENT

LONGITUDINAL SECTION

NOTES

Use details shown on this sheet only as they apply to the project. See the General Layout or Other Sheets for beam spacing, slab thickness, size and spacing of S100 bars, number and spacing of S200 and S300~#4 bars, deck joint arrangement, rail and curb length, rail post spacing, bill of reinforcing steel and roadway width.

When adjoining spans have a different number of longitudinal slab bars, make the longitudinal bars of the shorter span continuous over the bent and extend them 3-0 into the longer span.

If the bridge is skewed, place the transverse slab reinforcing steel as shown on Other Sheets.

See Standard Bridge Rail Type T101 drawing for rail details.

✱✱ NOTE: Use a detail for end bents with expansion joints similar to the detail for an expansion joint at an intermediate bent.

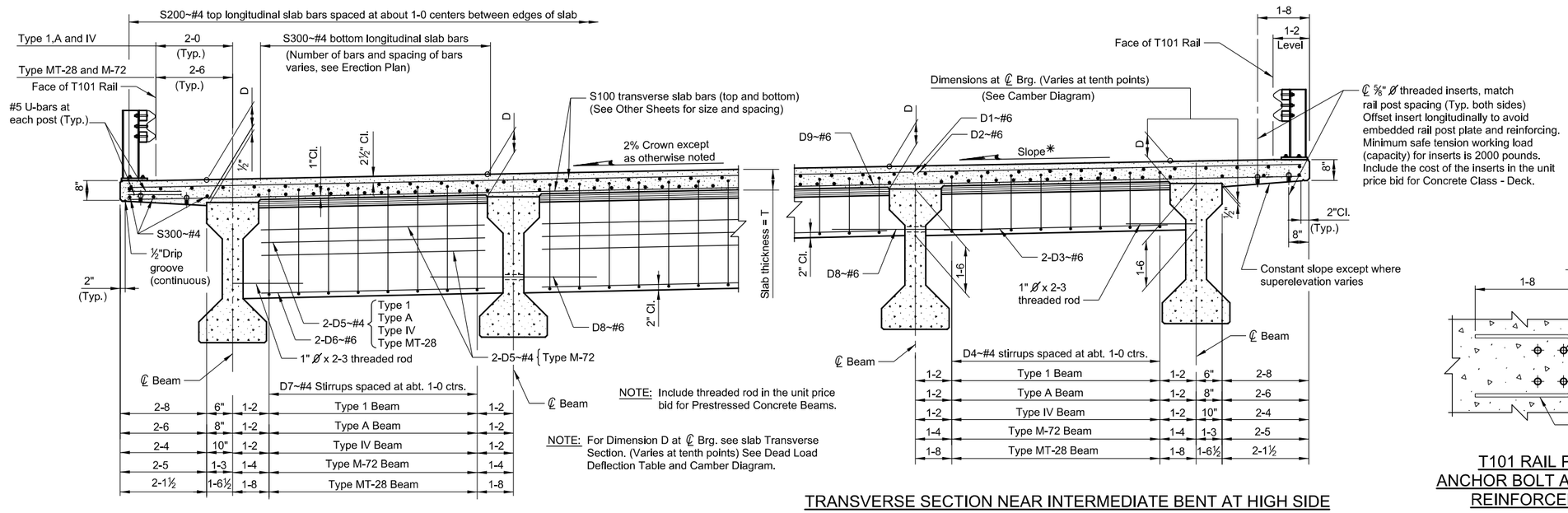

NOTE: Include threaded rod in the unit price bid for Prestressed Concrete Beams.

NOTE: For Dimension D at ℄ Brg. see slab Transverse Section. (Varies at tenth points) See Dead Load Deflection Table and Camber Diagram.

TRANSVERSE SECTION NEAR INTERMEDIATE DIAPHRAGM AT LOW SIDE

TRANSVERSE SECTION NEAR INTERMEDIATE BENT AT HIGH SIDE

✱ NOTE: Detail shown is for superelevations other than normal crown.

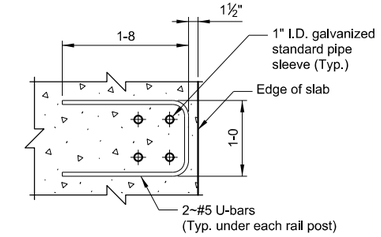

T101 RAIL POST
ANCHOR BOLT ASSEMBLY
REINFORCEMENT

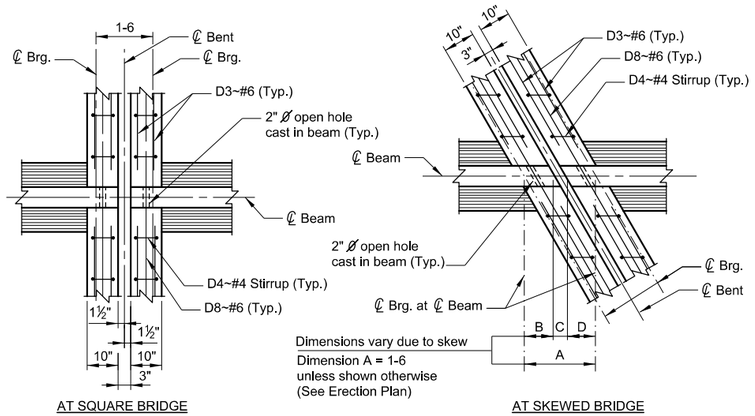

SECTION A-A

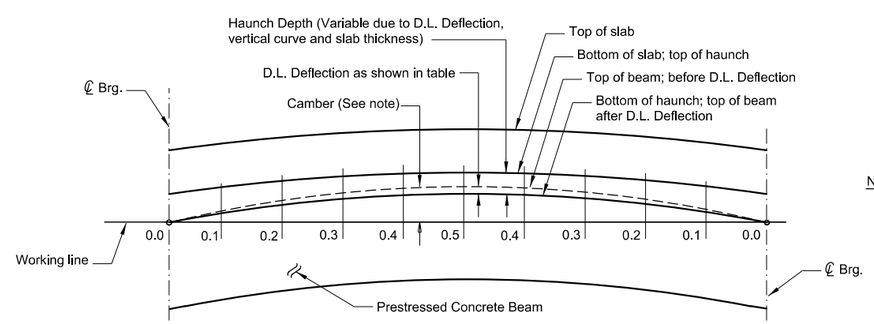

CAMBER DIAGRAM

NOTE: Camber is noted as the distance from the working line to the top of beam and may vary from theoretically calculated D.L. deflection.

NOTE: See Erection plan for theoretical D.L. Deflection Table for Prestressed Concrete Beams.

STANDARD SLAB, RAIL
AND DIAPHRAGM DETAILS

No Scale

MDT MONTANA DEPARTMENT OF TRANSPORTATION
BRIDGE BUREAU

REVISED	3-15-17	D.F.J.	
REVISED	2-27-15	D.F.J.	
REVISED	3-21-12	D.F.J.	
REVISED	3-28-08	T.J.B.	
APPROVED	2-12-08	D.F.J.	
CHECKED	10-9-07	D.J.R.	
DRAWN	9-27-07	L.M.S.	
$DATE$	$TIME$	$FILEABBREV$	

DRAWING NO.
SL-6

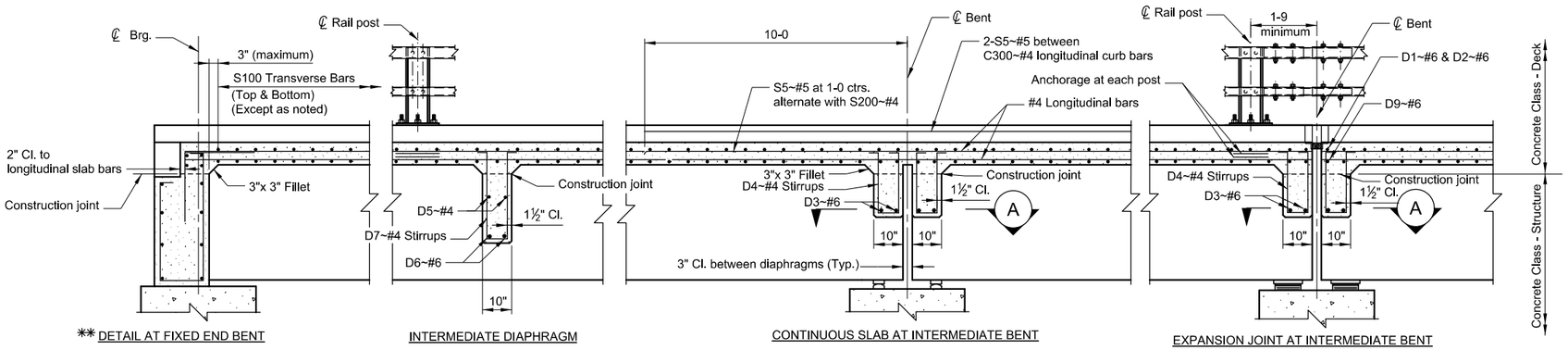

** DETAIL AT FIXED END BENT

INTERMEDIATE DIAPHRAGM

CONTINUOUS SLAB AT INTERMEDIATE BENT

EXPANSION JOINT AT INTERMEDIATE BENT

LONGITUDINAL SECTION

NOTES

Use details shown on this sheet only as they apply to the project. See the General Layout or Other Sheets for beam spacing, slab thickness, size and spacing of S100 bars, number and spacing of S200 and S300~#4 bars, deck joint arrangement, rail and curb length, rail post spacing, bill of reinforcing steel and roadway width.

When adjoining spans have a different number of longitudinal slab bars, make the longitudinal bars of the shorter span continuous over the bent and extend them 3-0 into the longer span.

If the bridge is skewed, place the transverse slab reinforcing steel as shown on Other Sheets.

Do not place concrete curb for at least 72 hours after concrete in slab has taken initial set.

See Standard Bridge Rail Type W740 or W830 drawing for rail and slab anchorage details.

** NOTE: Use a detail for end bents with expansion joints similar to the detail for an expansion joint at an intermediate bent.

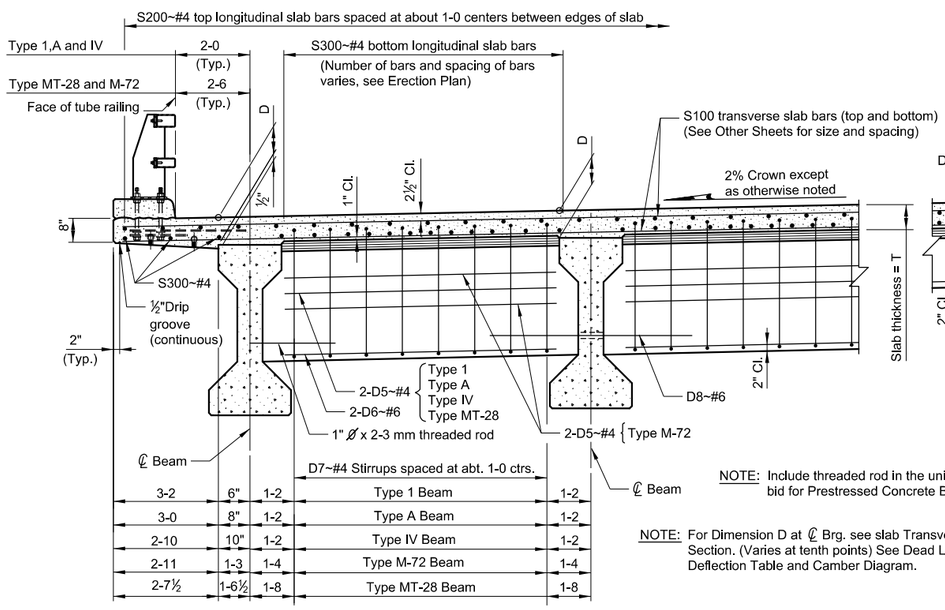

NOTE: Include threaded rod in the unit price bid for Prestressed Concrete Beams.

NOTE: For Dimension D at ℄ Brg. see slab Transverse Section. (Varies at tenth points) See Dead Load Deflection Table and Camber Diagram.

TRANSVERSE SECTION NEAR INTERMEDIATE DIAPHRAGM AT LOW SIDE

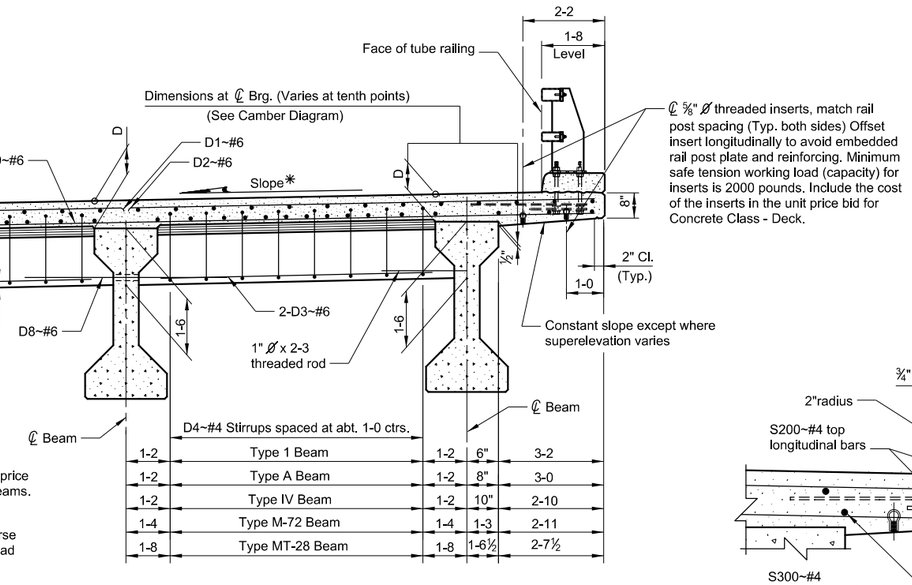

TRANSVERSE SECTION NEAR INTERMEDIATE BENT AT HIGH SIDE

*NOTE: Detail shown is for superelevations other than normal crown.

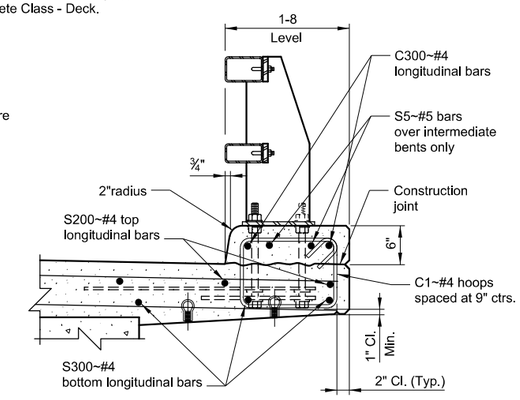

CURB REINFORCING DETAIL

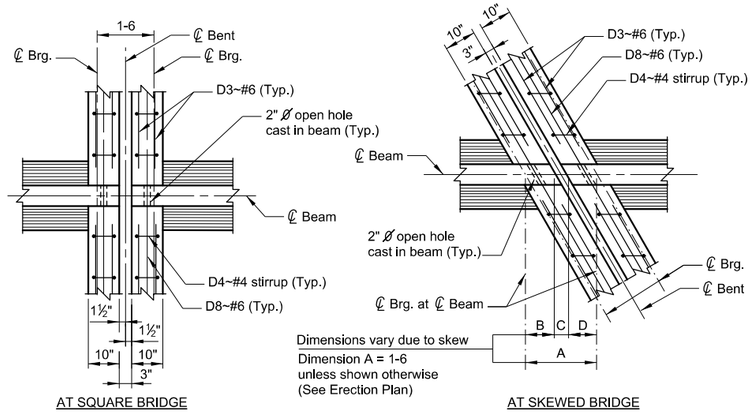

AT SQUARE BRIDGE

AT SKEWED BRIDGE

SECTION A-A

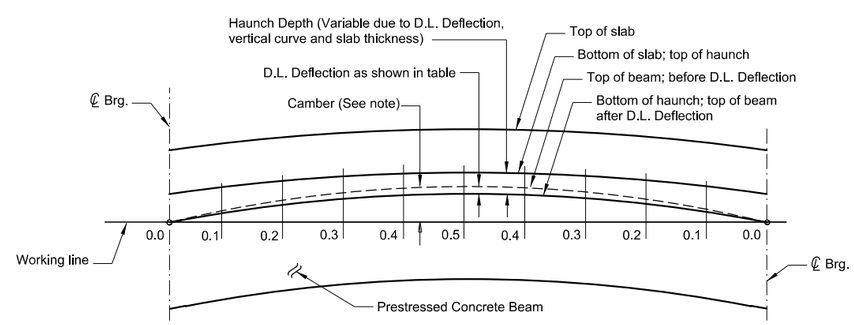

CAMBER DIAGRAM

NOTE: Camber is noted as the distance from the working line to the top of beam and may vary from theoretically calculated D.L. deflection.

NOTE: See Erection plan for theoretical D.L. Deflection Table for Prestressed Concrete Beams.

STANDARD SLAB AND DIAPHRAGM DETAILS

No Scale

MDT MONTANA DEPARTMENT OF TRANSPORTATION

BRIDGE BUREAU

REVISED	3-15-17	D.F.J.
REVISED	5-30-14	D.F.J.
REVISED	3-21-12	D.F.J.
APPROVED	3-26-08	D.F.J.
CHECKED	10-9-07	D.J.R.
DRAWN	9-26-07	L.M.S.
$DATE$	$TIME$	$FILEABBREV$

DRAWING NO.
SL-7

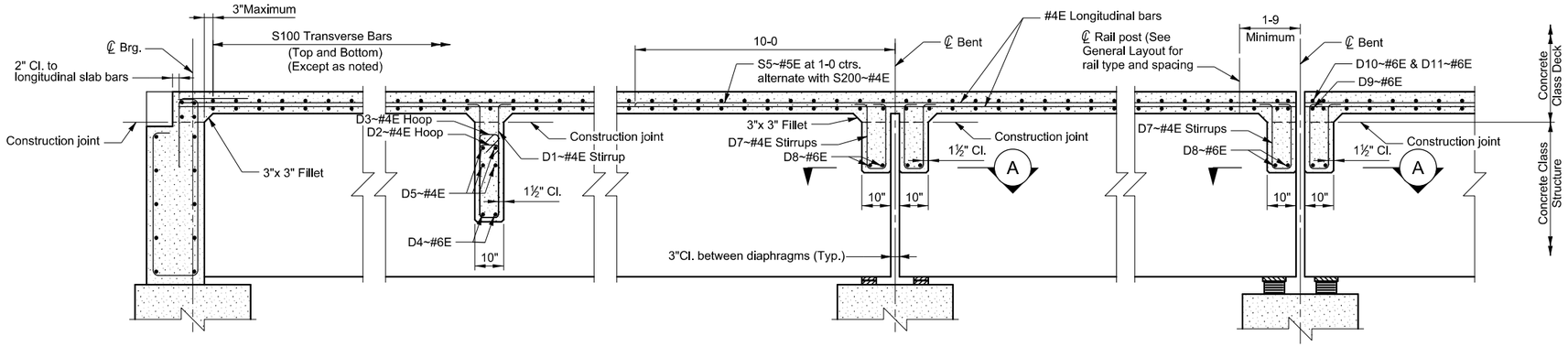

DETAIL AT FIXED END BENT

INTERMEDIATE DIAPHRAGM

CONTINUOUS SLAB AT INTERMEDIATE BENT

EXPANSION JOINT AT INTERMEDIATE BENT

**NOTE: Use a detail for end bents with expansion joints similar to the detail for an expansion joint at an intermediate bent.

LONGITUDINAL SECTION

NOTES

Use details shown on this sheet only as they apply to the project. See the General Layout or Other Sheets for beam spacing, slab thickness, size and spacing of S100 bars, number and spacing of S200 and S300~#4 bars, deck joint arrangement, rail and curb length, rail post spacing, bill of reinforcing steel and roadway width.

When adjoining spans have a different number of longitudinal slab bars, make the longitudinal bars of the shorter span continuous over the bent and extend them 3-0 into the longer span.

If the bridge is skewed, place the transverse slab reinforcing steel as shown on Other Sheets.

See Standard Bridge Rail drawings for rail details.

The suffix E denotes epoxy coated reinforcing.

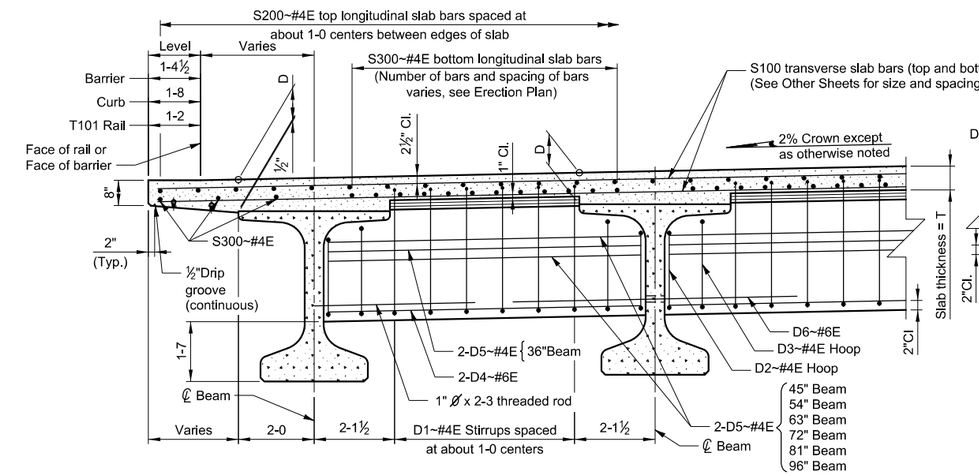

TRANSVERSE SECTION NEAR INTERMEDIATE DIAPHRAGM AT LOW SIDE

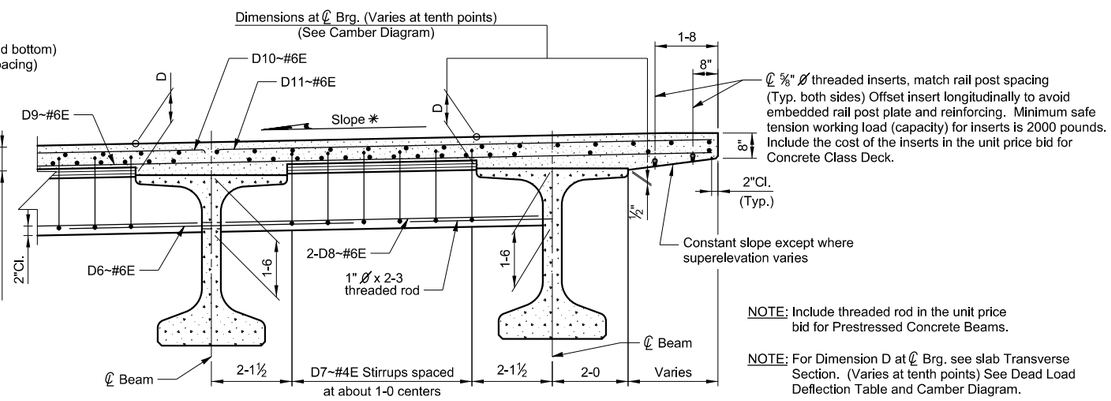

NOTE: Include threaded rod in the unit price bid for Prestressed Concrete Beams.

NOTE: For Dimension D at ℄ Brg. see slab Transverse Section. (Varies at tenth points) See Dead Load Deflection Table and Camber Diagram.

TRANSVERSE SECTION NEAR INTERMEDIATE BENT AT HIGH SIDE

*NOTE: Detail shown is for superelevations other than normal crown.

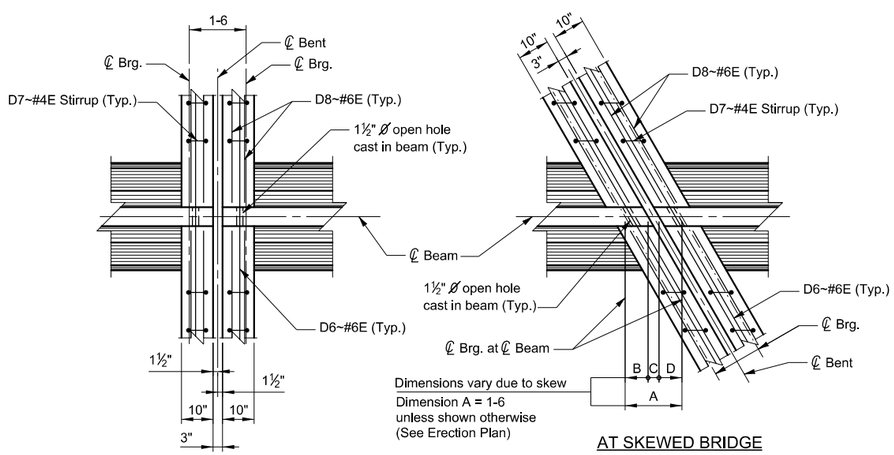

AT SQUARE BRIDGE

AT SKEWED BRIDGE

SECTION A

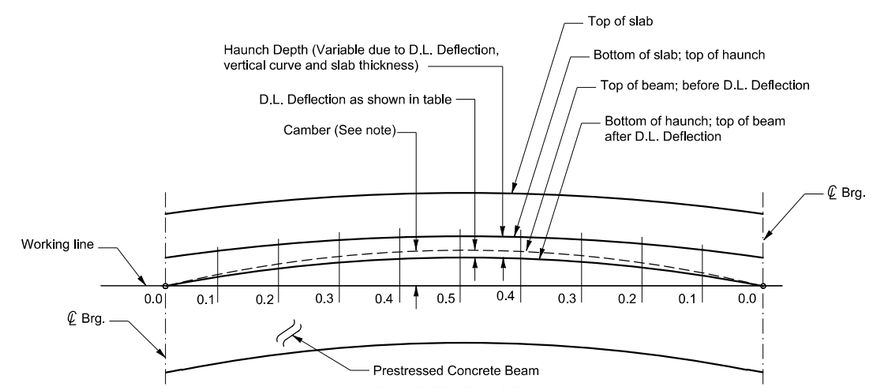

NOTE: See Erection plan for theoretical D.L. Deflection Table for Prestressed Concrete Beams.

CAMBER DIAGRAM

NOTE: Camber is noted as the distance from the working line to the top of beam and may vary from theoretically calculated D.L. deflection.

STANDARD SLAB AND DIAPHRAGM DETAILS

No Scale

MDT MONTANA DEPARTMENT OF TRANSPORTATION

BRIDGE BUREAU

REVISED			
REVISED			
REVISED	3-15-17	D.F.J.	
REVISED	5-20-14	D.F.J.	
APPROVED	3-6-12	D.F.J.	
CHECKED	3-6-12	D.F.J.	
DRAWN	3-6-12	T.J.B.	SFILEABBREVS
$DATE$		$TIME$	

DRAWING NO.
SL-8

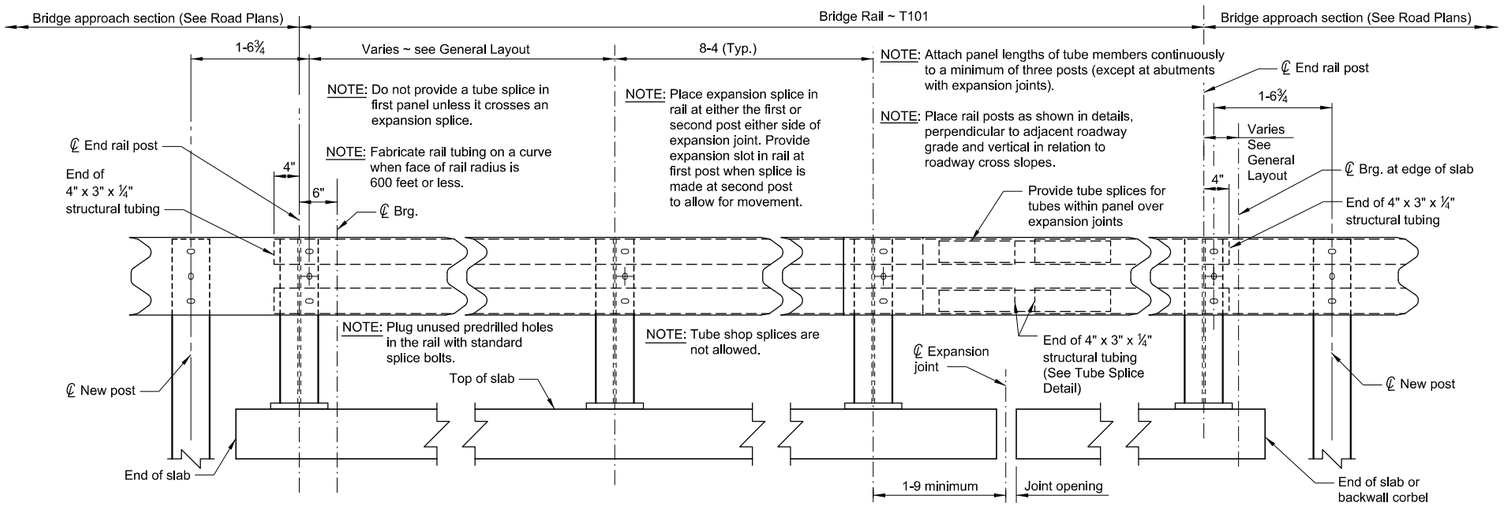

AT SQUARE BRIDGE END

INSIDE ELEVATION OF RAIL

AT SKEWED BRIDGE END

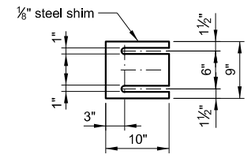

RAIL POST SHIM DETAIL

NOTE: Furnish shims as necessary to adjust rail to grade. Place shims between fiber reinforced pads. Place shims with slots toward roadway centerline.

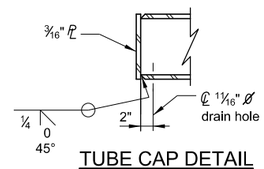

TUBE CAP DETAIL

NOTES

GALVANIZING: Galvanize all bolts, nuts, washers and pipe sleeves in accordance with ASTM F 2329. Galvanize metal guardrail in accordance with ASTM Specification A 653 or AASHTO M 111.

REFLECTORS: Place a reflector on each end rail post and at approximately equal spacing (every third rail post but not to exceed 25 feet) between end rail posts. Mount reflectors with reflectorized face toward oncoming traffic. See Dtl. Dwg. No. 606-05 for reflector detail. Mount reflector to W-beam post web with an approved adhesive. Include the cost of the reflector in the unit price bid for Bridge Rail ~ T101.

PAYMENT: Bridge Rail ~ T101 is paid for by the linear foot which is full compensation for all resources necessary to complete the item. The number of linear feet of Bridge Rail ~ T101 for payment is shown on the General Layout. Use posts and plates conforming to AASHTO M 270 Grade 36T3. Use metal guardrail conforming to AASHTO M 180 and lap in direction of traffic.

ERECTION: Set the rail parallel to the roadway grade. Adjust rail to proper rail height using vertical slots in rail post or rail post shims.

PAINTING: Paint all posts, structural tubing and plates (except as noted) in accordance with the Standard Specifications. Galvanizing the posts, structural tubing and plates in accordance with AASHTO M 111 is allowed.

EXCEPTIONS: Use details shown on this drawing only as they apply to the project. Anchorage details may vary. Refer to other drawings for variations in these details.

FABRICATION: For the purposes of fabrication, this rail system is considered an ancillary item. The requirements of subsection 1.3.7 of AASHTO/AWS D1.5 apply.

RAIL WEIGHT: For informational purposes only, the rail weight is approximately 40.0 lb/ft.

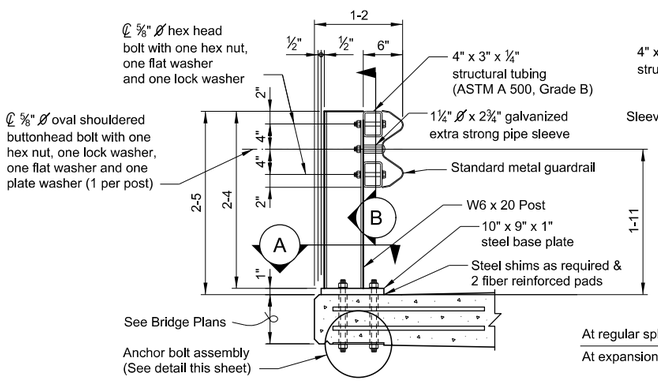

RAIL POST DETAIL

NOTE: See Dtl. Dwg. No. 606-84 for rectangular plate washer detail.

NOTE: Finish the top of slab under each rail post to a smooth and uniform surface to assure a proper alignment of the post and a tight fit between the fiber reinforced pad and concrete. Bush hammering is acceptable only to remove high spots.

NOTE: Use fiber reinforced pads meeting the requirements of subsection 711.16 of the Standard Specifications. Size and position the pads so that not less than ½" of the pad protrudes on all sides of the base plate. Punch slotted holes in pads to match base plate.

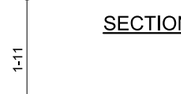

SECTION C

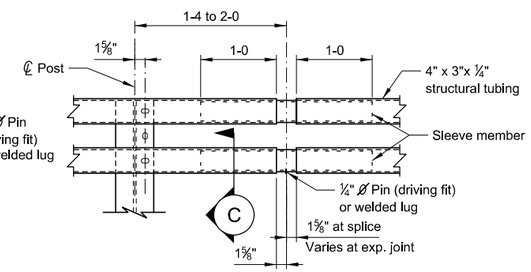

TUBE SPLICE DETAIL

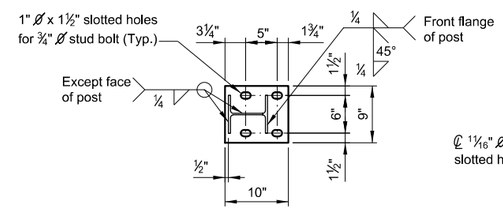

SECTION A

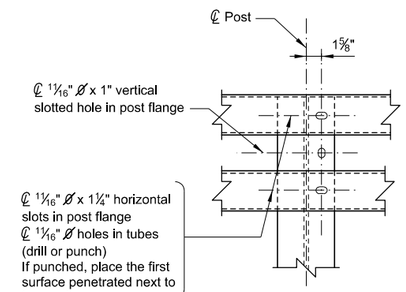

SECTION B

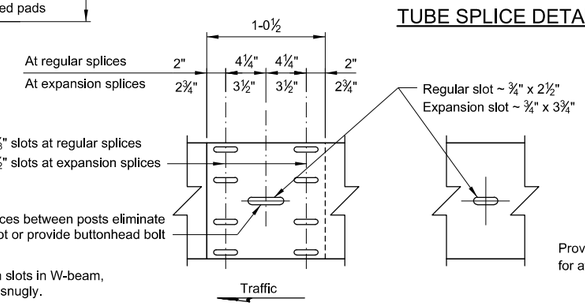

NOTE: At expansion slots in W-beam, tighten bolts snugly.

RAIL SPLICE

POST CONNECTION

NOTE: Provide ⅝" Ø oval shouldered buttonhead bolts with hex nuts at all splice slots.

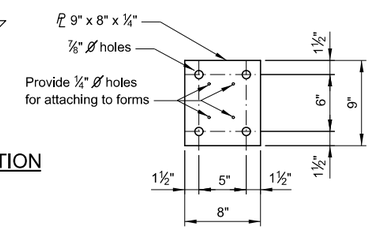

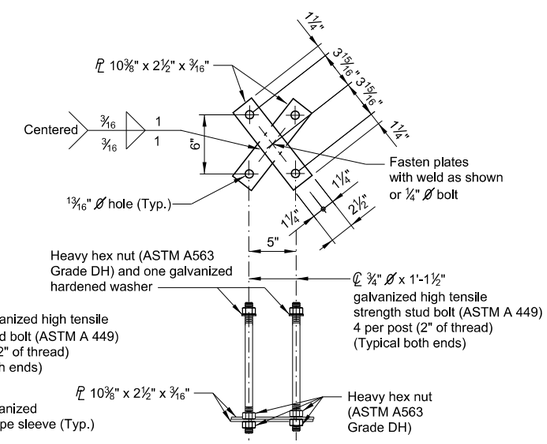

ANCHOR BOLT ASSEMBLY DETAIL

(Typical for flat slab and U-type bent)

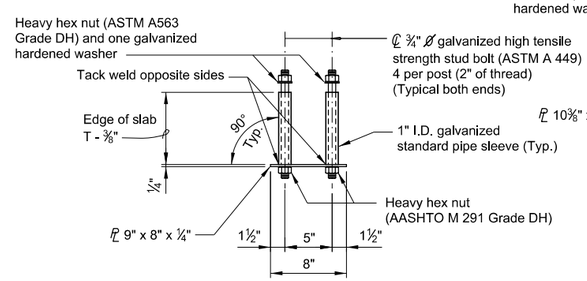

ANCHOR BOLT ASSEMBLY DETAIL

(For typical slab)

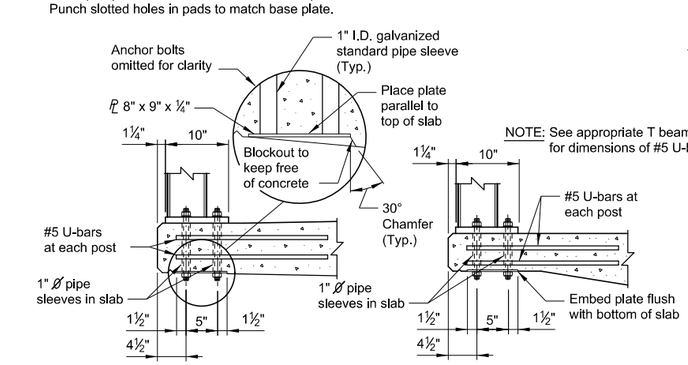

STANDARD SLAB

BULB T BEAM

FLAT SLAB

POST MOUNTING DETAILS

NOTE: Fabricate sleeves using channels, angles, plates, or bent plates meeting the dimensions shown. Weld and grind smooth as required. Fabricate sleeves using no more than four welds. Fabricate sleeves with a minimum wall thickness of ¼".

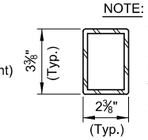

SLEEVE FABRICATION OPTIONS

STANDARD BRIDGE RAIL
TYPE T101

No Scale

MDT MONTANA DEPARTMENT OF TRANSPORTATION — BRIDGE BUREAU

REVISED	3-15-17	D.F.J.	
REVISED	9-17-12	D.F.J.	
REVISED	2-1-11	D.F.J.	
REVISED	4-1-08	T.J.B.	
APPROVED	12-18-07	D.F.J.	
CHECKED	11-29-06	M.L.R.	
DRAWN	6-21-06	L.M.S.	
$DATES	$TIMES	$FILEABBREVS	

DRAWING NO.
SBR-T101

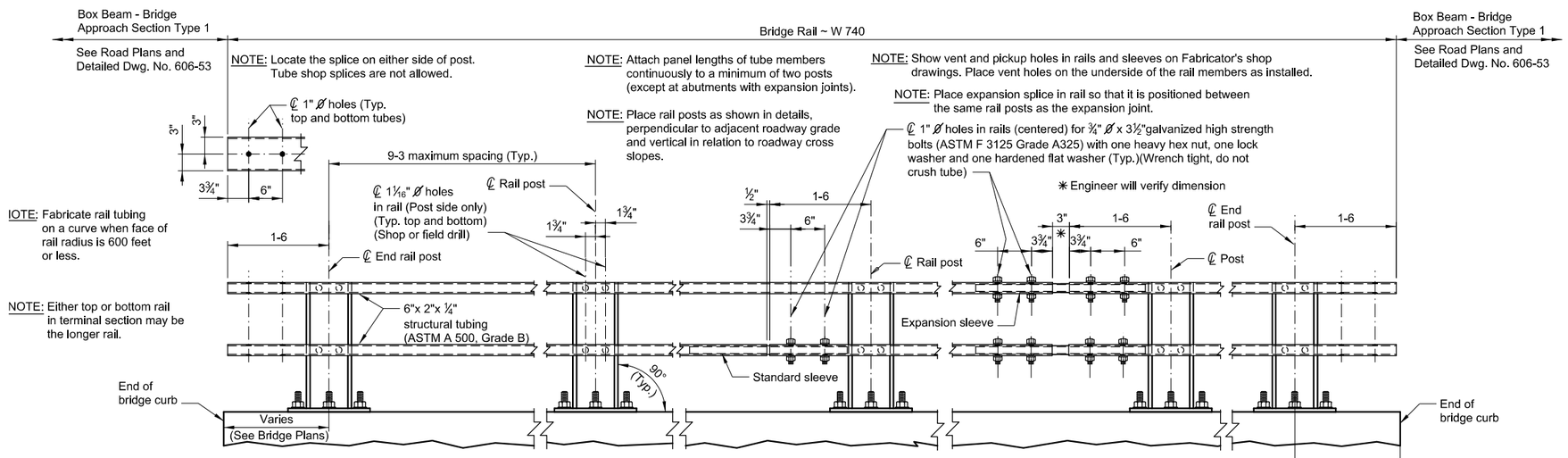

ELEVATION AT BOX BEAM GUARDRAIL CONNECTION

NOTE: Do not provide a tube splice in first panel unless it crosses an expansion joint.

STANDARD SPLICE

(Top or bottom rail)

EXPANSION SPLICE

(Top and bottom rail)

INSIDE ELEVATION OF RAIL

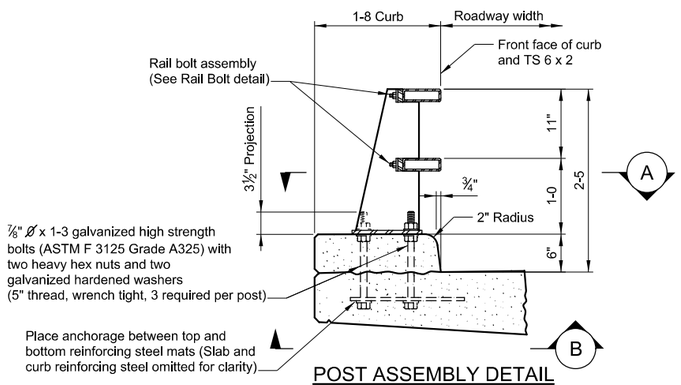

POST ASSEMBLY DETAIL

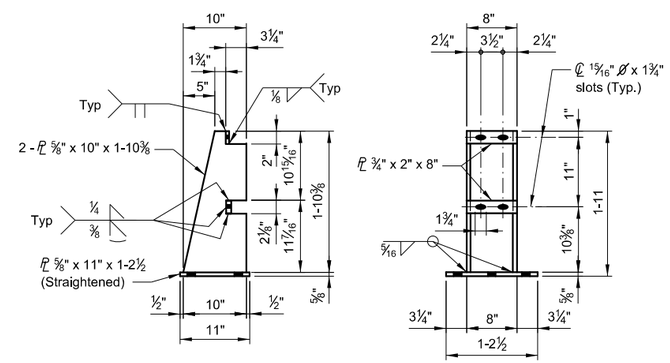

POST DETAILS

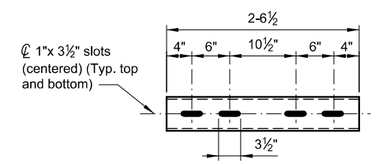

EXPANSION SLEEVE DETAIL

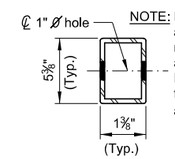

NOTE: Fabricate sleeves using channels, angles, plates, or bent plates meeting the dimensions shown. Weld and grind smooth as required. Fabricate sleeves using no more than four welds. Fabricate sleeves with a minimum wall thickness of 3/16".

SLEEVE FABRICATION OPTIONS

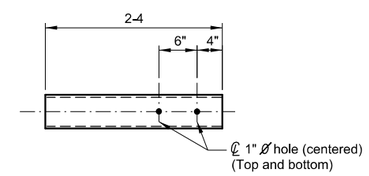

STANDARD SLEEVE DETAIL

NOTES

GALVANIZING: Galvanize all bolts, nuts, washers and pipe sleeves in accordance with ASTM F 2329.

REFLECTORS: Place a white reflector on top of the top tube rail at equal spacing (not to exceed 30 foot spacing) between ends of rail. See Dtl. Dwg. No. 605-00 for reflector detail. Mount the reflector on the tube rail with an approved adhesive. Include the cost of reflector in the unit price bid for Bridge Rail ~ W740.

PAYMENT: Payment for Bridge Rail ~ W740 per linear foot includes compensation for the cost of Concrete Class Deck in the curb and for all resources necessary to complete the work. See the General Layout for the number of linear feet for payment of Bridge Rail ~ W740. Use rail post plates and base plates conforming to AASHTO M 270 Grade 36 T3. Use AASHTO M 270 Grade 36 for all other plates.

ERECTION: Place rail posts as shown in details, perpendicular to adjacent roadway grade and vertical in relation to roadway cross slopes. Place posts in proper alignment prior to placement of curb.

PAINTING: Paint all posts, structural tubing and plates (except as noted) in accordance with the Standard Specifications. Galvanizing the posts, structural tubing and plates in accordance with AASHTO M 111 will be allowed.

EXCEPTIONS: Use details shown on this drawing only as they apply to the project. Anchorage details may vary. Refer to other drawings for variations in these details.

FABRICATION: For the purposes of fabrication, this rail system is considered an ancillary item. The requirments of subsection 1.3.7 of AASHTO/AWS D1.5 apply.

RAIL WEIGHT: For informational purposes only, the rail weight is approximately 123.0 lb/ft for the curb and 39 lb/ft for the rail.

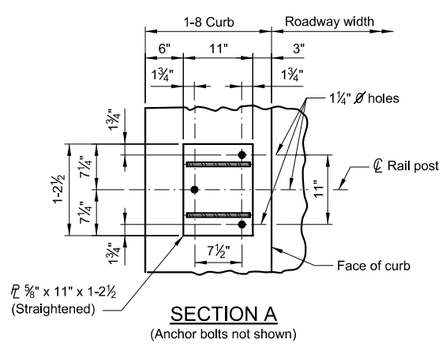

SECTION A

(Anchor bolts not shown)

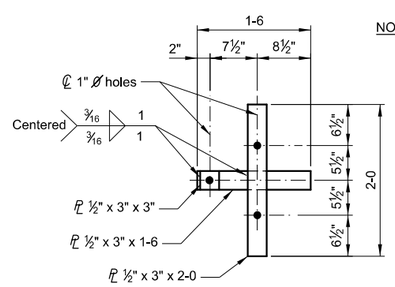

NOTE: Anchor bolts may be tack welded to anchorage (shop or field).

VIEW B(STANDARD SLAB)

(Do not galvanize)
(Anchor bolts not shown)

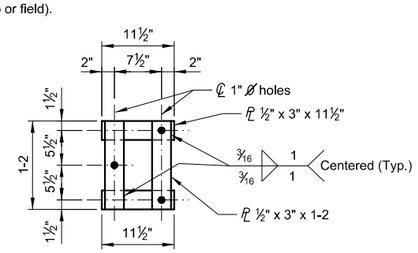

VIEW B (U-TYPE BENT)

(Do not galvanize)
(Anchor bolts not shown)

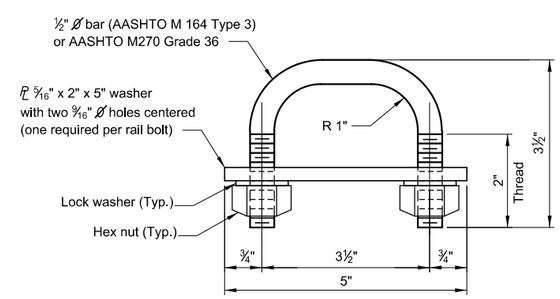

RAIL BOLT DETAIL

STANDARD BRIDGE RAIL
TYPE W740

No Scale

MDT MONTANA DEPARTMENT OF TRANSPORTATION
BRIDGE BUREAU

REVISED		
REVISED	3-15-17	D.F.J.
REVISED	5-20-14	D.F.J.
REVISED	2-1-11	D.F.J.
APPROVED	3-26-08	D.F.J.
CHECKED	12-4-06	M.L.R.
DRAWN	6-27-06	L.M.S.
$DATE$	$TIME$	$FILEABBREV$

DRAWING NO.
SBR-W740

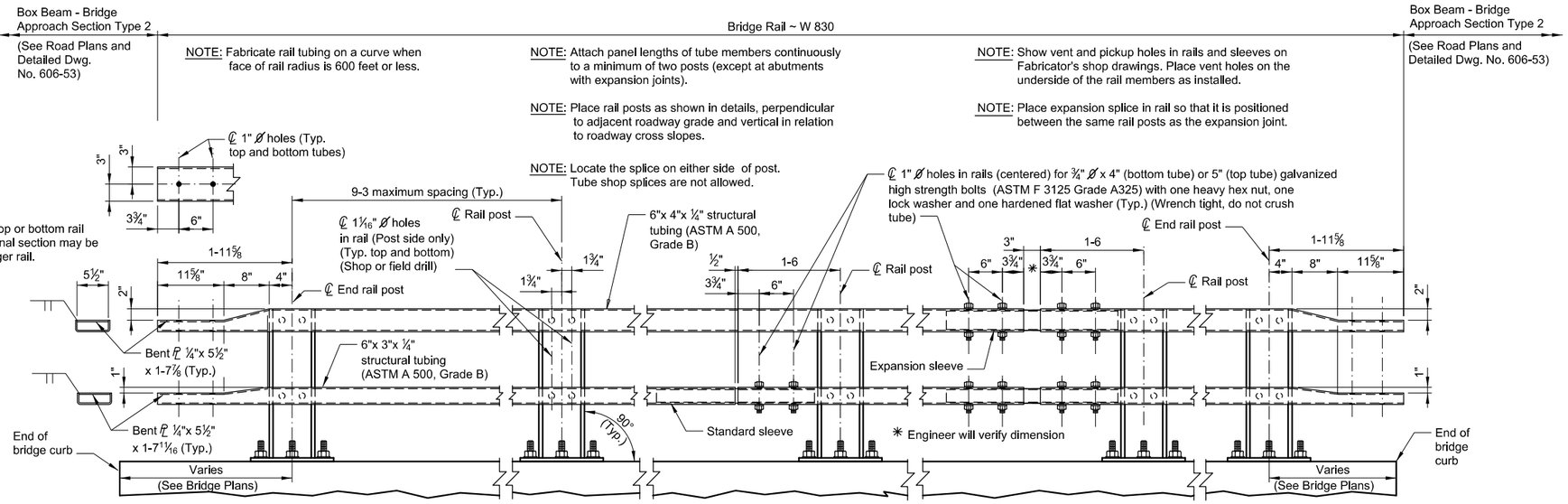

ELEVATION AT BOX BEAM GUARDRAIL CONNECTION

NOTE: Do not provide a tube splice in first panel unless it crosses an expansion joint.

STANDARD SPLICE

(Top or bottom rail)

EXPANSION SPLICE

(Top and bottom rail)

INSIDE ELEVATION OF RAIL

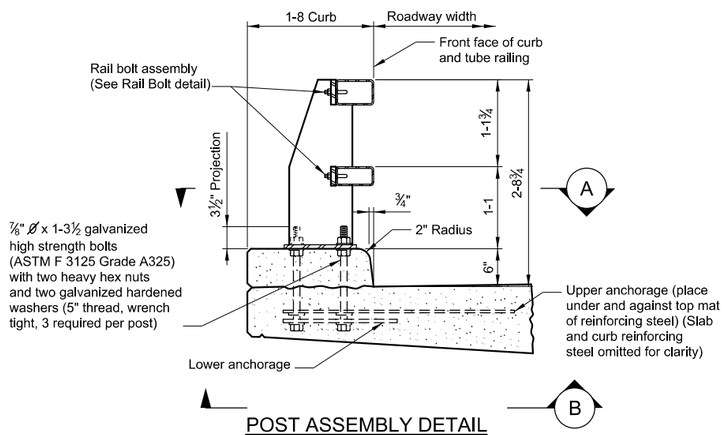

POST ASSEMBLY DETAIL

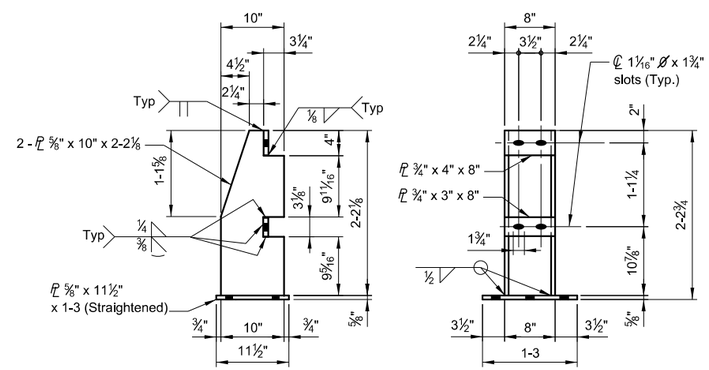

POST DETAILS

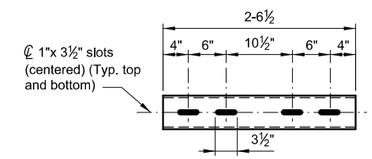

EXPANSION SLEEVE DETAIL

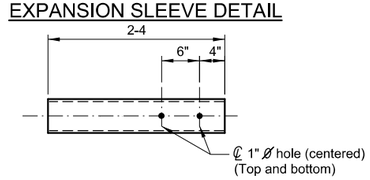

STANDARD SLEEVE DETAIL

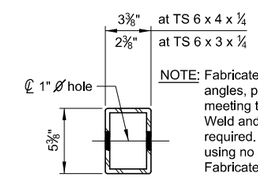

NOTE: Fabricate sleeves using channels, angles, plates, or bent plates meeting the dimensions shown. Weld and grind smooth as required. Fabricate sleeves using no more than four welds. Fabricate sleeves with a minimum wall thickness of 3/16".

SLEEVE FABRICATION OPTIONS

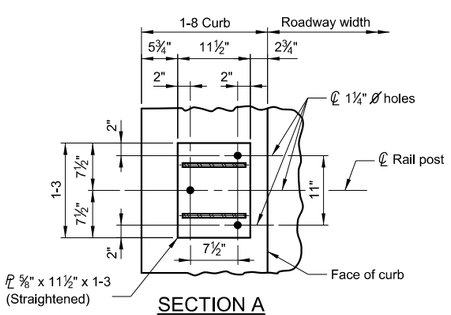

SECTION A

(Anchor bolts not shown)

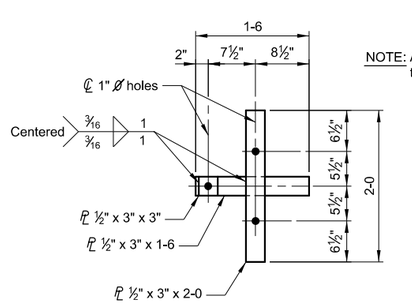

NOTE: Anchor bolts may be tack welded to anchorage (shop or field).

VIEW B

(Showing lower anchorage)
(Do not galvanize)
(Anchor bolts not shown)

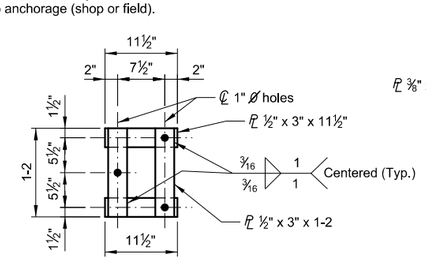

VIEW B (U-TYPE BENT)

(Do not galvanize)
(Anchor bolts not shown)

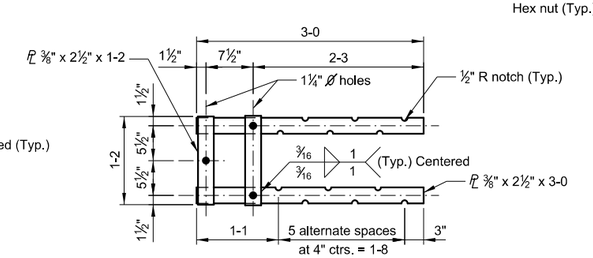

VIEW B

(Showing upper anchorage)
(Do not galvanize)
(Anchor bolts not shown)

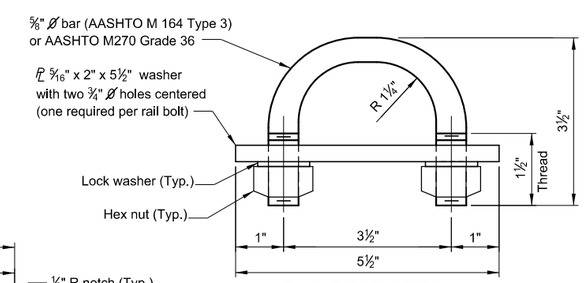

RAIL BOLT DETAIL

NOTES

GALVANIZING: Galvanize all bolts, nuts, washers and pipe sleeves in accordance with ASTM F 2329.

REFLECTORS: Place a white reflector on top of the top tube rail at equal spacing (not to exceed 30 foot spacing) between ends of rail. See Dtl. Dwg. No. 605-00 for reflector detail. Mount the reflector on the tube rail with an approved adhesive. Include the cost of reflector in the unit price bid for Bridge Rail ~ W830.

PAYMENT: Payment for Bridge Rail ~ W830 per linear foot includes compensation for the cost of Concrete Class Deck in the curb and for all resources necessary to complete the work. See the General Layout for the number of linear feet for payment of Bridge Rail ~ W830. Use rail post plates and base plates conforming to AASHTO M 270 Grade 36 T3. Use AASHTO M 270 Grade 36 for all other plates.

ERECTION: Place rail posts as shown in details, perpendicular to adjacent roadway grade and vertical in relation to roadway cross slopes. Place posts in proper alignment prior to placement of curb.

PAINTING: Paint all posts, structural tubing and plates (except as noted) in accordance with the Standard Specifications. Galvanizing the posts, structural tubing and plates in accordance with AASHTO M 111 will be allowed.

EXCEPTIONS: Use details shown on this drawing only as they apply to the project. Anchorage details may vary. Refer to other drawings for variations in these details.

FABRICATION: For the purposes of fabrication, this rail system is considered an ancillary item. The requirements of subsection 1.3.7 of AASHTO/AWS D1.5 apply.

RAIL WEIGHT: For informational purposes only, the rail weight is approximately 123.0 lb/ft for the curb and 50.0 lb/ft for the rail.

STANDARD BRIDGE RAIL
TYPE W830

No Scale

MDT MONTANA DEPARTMENT OF TRANSPORTATION
BRIDGE BUREAU

REVISED	3-15-17	D.F.J.
REVISED	5-20-14	D.F.J.
REVISED	2-1-11	D.F.J.
APPROVED	3-26-08	D.F.J.
CHECKED	3-20-08	D.J.R.
DRAWN	8-2-06	L.M.S.
$DATES	$TIMES	$FILEABBREVS

DRAWING NO.
SBR-W830

W740 TERMINATION DETAILS

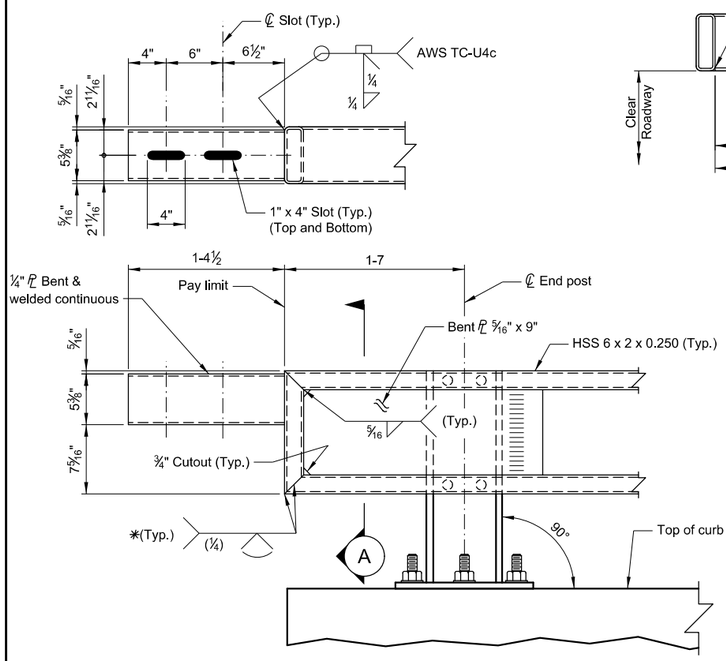

ELEVATION AT TERMINAL TYPE BOX BEAM

(Box Beam guardrail connection, Interstate exit departure end only)

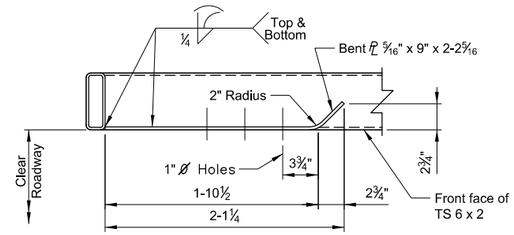

BENT PLATE DETAIL

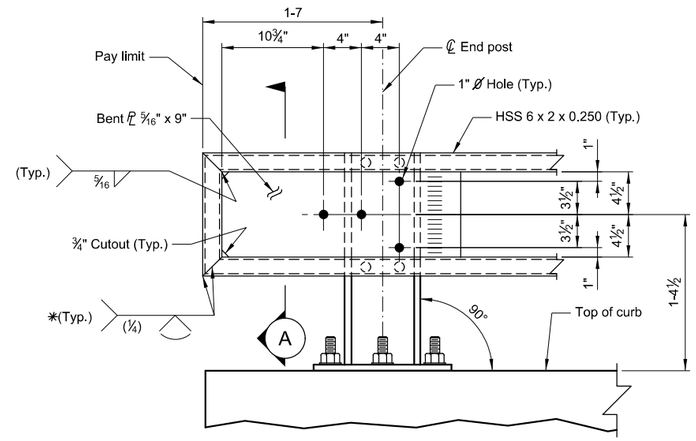

ELEVATION AT TERMINAL TYPE W-BEAM

(W-beam guardrail connection
or no guardrail connection)

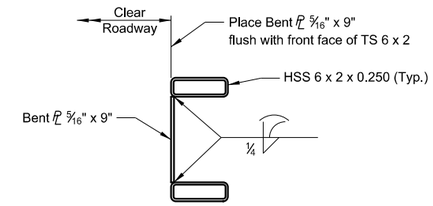

SECTION A

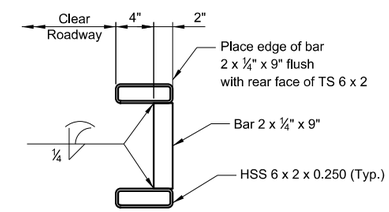

BRACE BAR DETAIL

NOTES

Either the top or bottom rail in terminal section may be the longer rail.

Railing that is part of terminal is continuous if either the top or bottom rail in the terminal is continuous over a minimum of two posts.

A brace bar is required and shall be placed 2-0 from the splice end of the shorter tube.

✳The Fabricator shall prepare a sample of the indicated joint and macroetch it to demonstrate that the required effective throat is achieved.

See Dwg. No. SBR-W740 for additional rail details.

W830 TERMINATION DETAILS

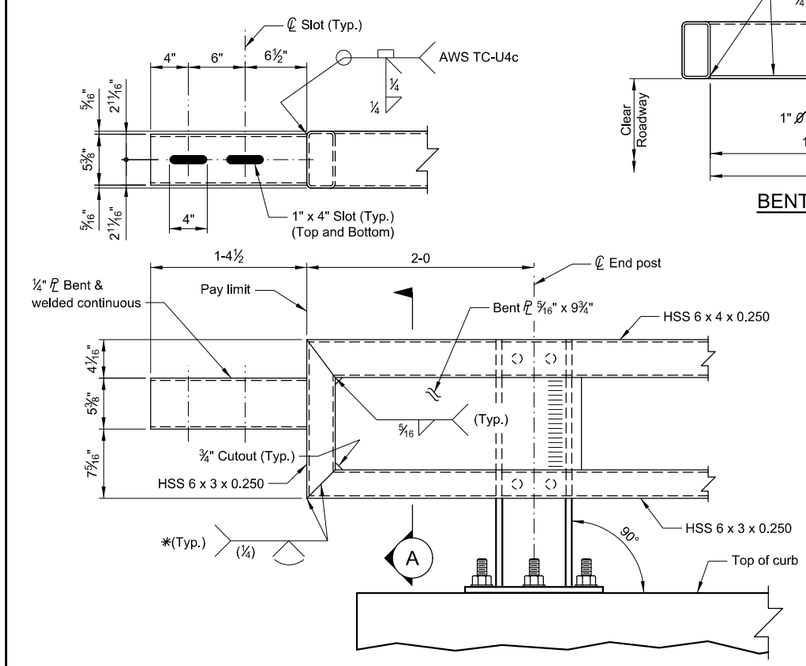

ELEVATION AT TERMINAL TYPE BOX BEAM

(Box Beam guardrail connection, Interstate exit departure end only)

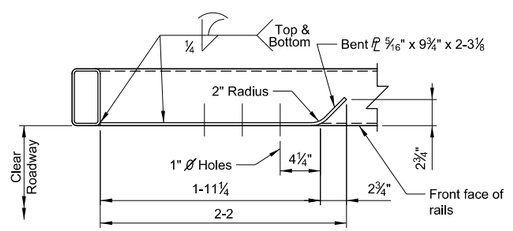

BENT PLATE DETAIL

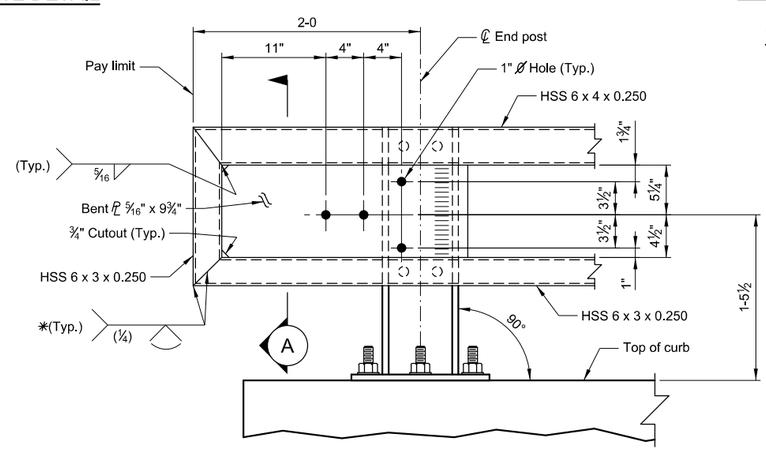

ELEVATION AT TERMINAL TYPE W-BEAM

(W-beam guardrail connection
or no guardrail connection)

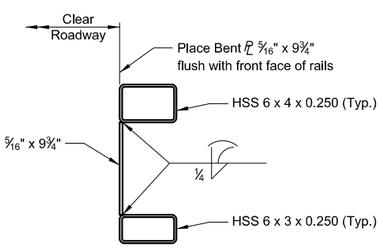

SECTION A

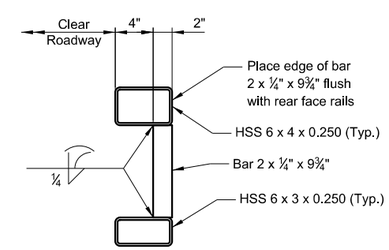

BRACE BAR DETAIL

NOTES

Either the top or bottom rail in terminal section may be the longer rail.

Railing that is part of terminal is continuous if either the top or bottom rail in the terminal is continuous over a minimum of two posts.

A brace bar is required and shall be placed 2-0 from the splice end of the shorter tube.

✳The Fabricator shall prepare a sample of the indicated joint and macroetch it to demonstrate that the required effective throat is achieved.

See Dwg. No. SBR-W830 for additional rail details.

STANDARD BRIDGE RAIL
TYPE W740 & W830
TERMINATION DETAILS

No Scale

MDT MONTANA DEPARTMENT OF TRANSPORTATION
BRIDGE BUREAU

REVISED			
REVISED			
REVISED	T.J.B.	1-19-16	
APPROVED	D.F.J.	10-28-11	
CHECKED	L.R.T.	10-28-11	
DRAWN	T.J.B.	10-3-11	
$DATES	$TIMES	$FILEABBREVS	

DRAWING NO.
SBR-WTRM

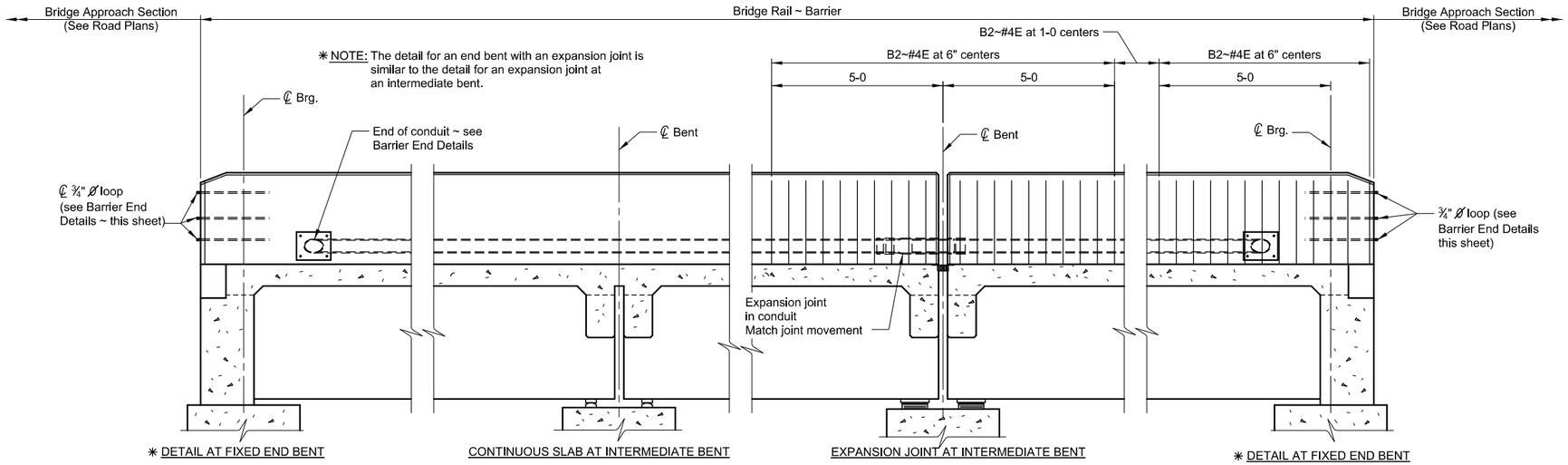

ELEVATION OF RAIL

NOTES

PLACEMENT: Do not place concrete barrier for at least 72 hours after concrete in slab has taken initial set.

REFLECTORS: Place a white reflector on top of concrete barrier at 30-0 spacing between ends of barrier. See Dtl. Dwg. No. 605-00 for reflector detail. Include the cost of reflectors in the unit price bid for Barrier Rail - Cast in Place - Br.

PAYMENT: Include all costs associated with reinforcing steel in the barrier in the unit price bid for Reinforcing Steel - Epoxy Coated. Include all other costs associated with the barrier in the unit price bid for Barrier Rail - Cast in Place - Br. See Specifications.

EXCEPTIONS: Use details shown on this drawing only as they apply to the project. Anchorage details may vary. Refer to other drawings for variations in these details.

RAIL WEIGHT: For informational purposes only, the rail weight is approximately 355.0 lb/ft.

PVC CONDUIT PIPE: Omit 4" Ø PVC conduit pipe in barrier on interstate structures.

REINFORCING: The suffix E denotes epoxy coated reinforcing.

RAIL DESIGN CAPACITY
Rw = 55 kips
Le = 4'-9"
Mc = 106 Kip * in / ft

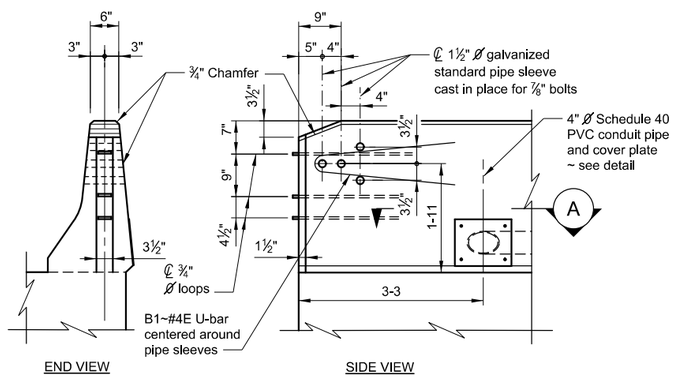

BARRIER END DETAILS

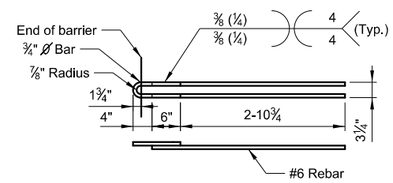

LOOP DETAIL

NOTE: Use reinforcing steel conforming to ASTM A 706, Grade 60 for rebar being welded to loops.

NOTE: Loop ends and the optional loop detail consist of smooth round bars conforming to AASHTO M 270, Grade 36.

NOTE: Cold bend the loops by using a jig that will produce an accurate radius without marring the bar. Do not heat the bar to facilitate bending.

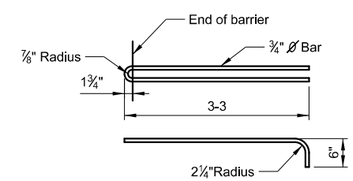

OPTIONAL LOOP DETAIL

NOTE: Weld rebar to loops using ⅛" Ø E8018 rod. Do not tack weld the pieces together prior to welding. Use a certified welder in accordance with the current edition of AWS D1.4. Do not place the welded assembly in the form until it has been inspected.

NOTE: No additional welding is permitted on the smooth round bars or reinforcing steel.

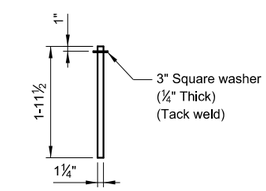

CONNECTING PIN DETAIL

NOTE: Use connecting pins conforming to AASHTO M 270, Grade 36.

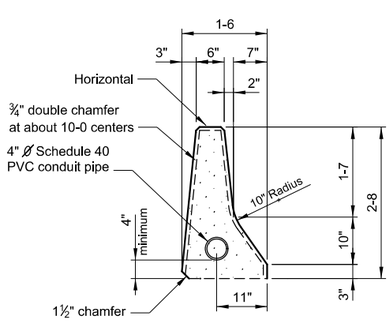

BARRIER DETAIL

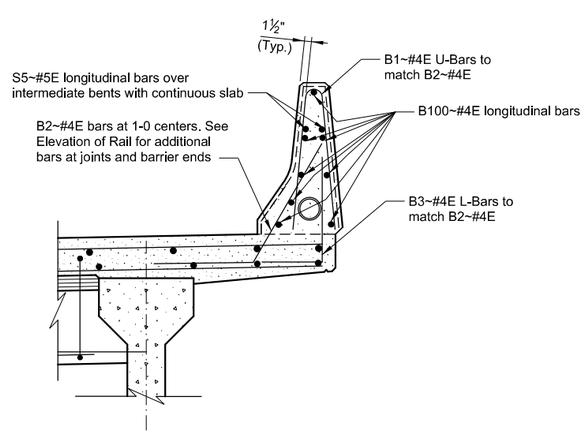

BARRIER REINFORCING DETAILS

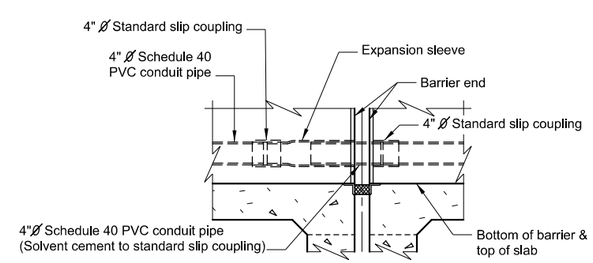

CONDUIT EXPANSION JOINT DETAIL

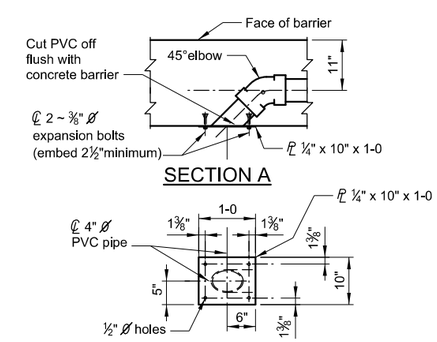

CONDUIT COVER PLATE DETAIL

NOTE: Galvanize plates in accordance with AASHTO M 111. Galvanize expansion bolts, nuts and washers in accordance with ASTM A 653 or AASHTO M 111.

STANDARD BRIDGE RAIL
TYPE BARRIER

No Scale

MDT MONTANA DEPARTMENT OF TRANSPORTATION
BRIDGE BUREAU

REVISED	3-15-17	D.F.J.
REVISED	6-18-14	D.F.J.
REVISED	1-2-12	S.L.F.B.
REVISED	2-1-11	D.F.J.
APPROVED	3-26-08	D.F.J.
CHECKED	3-12-08	D.J.R.
DRAWN	3-3-08	T.J.B.
$DATE$	$TIME$	$FILEABBREV$

DRAWING NO.
SBR-BRR

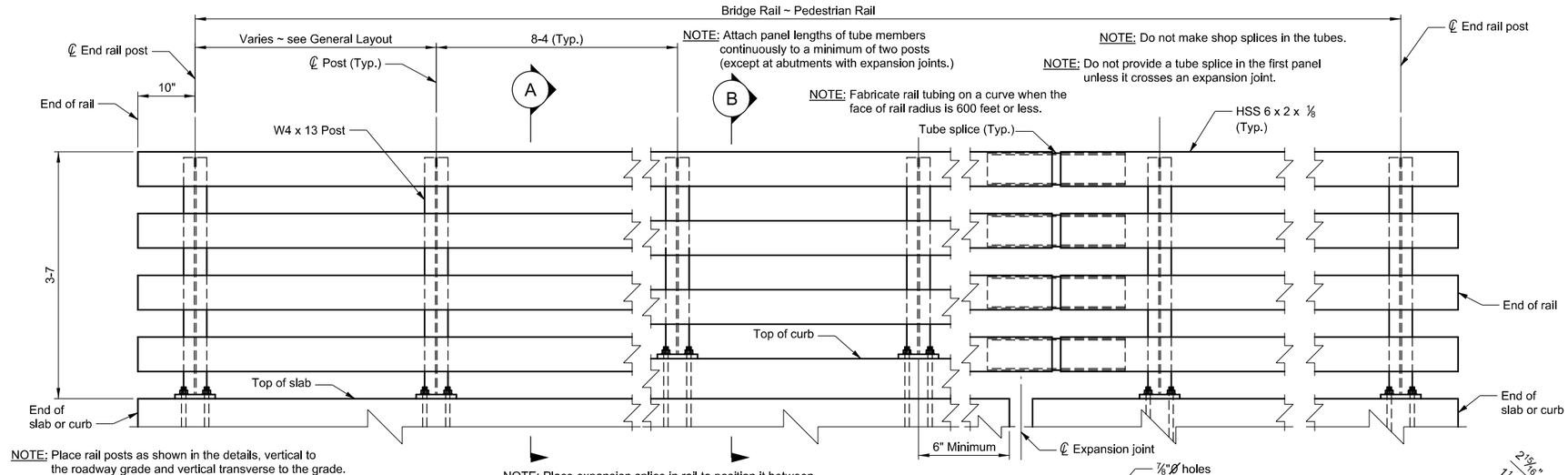

NOTE: Place rail posts as shown in the details, vertical to the roadway grade and vertical transverse to the grade.

NOTE: Place expansion splice in rail to position it between the same rail posts as the expansion joint.

INSIDE ELEVATION OF RAIL

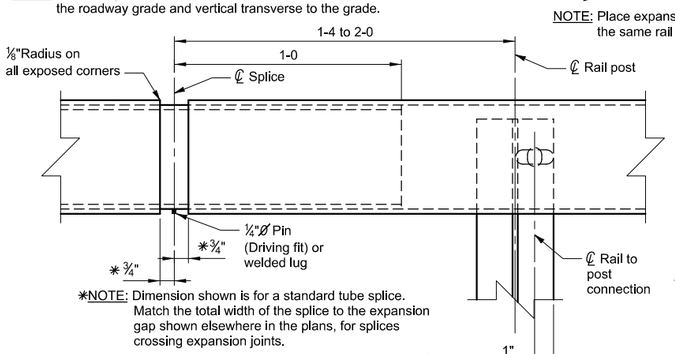

*NOTE: Dimension shown is for a standard tube splice. Match the total width of the splice to the expansion gap shown elsewhere in the plans, for splices crossing expansion joints.

TUBE SPLICE DETAIL

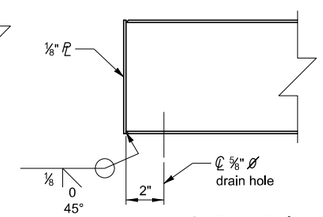

TUBE CAP DETAIL

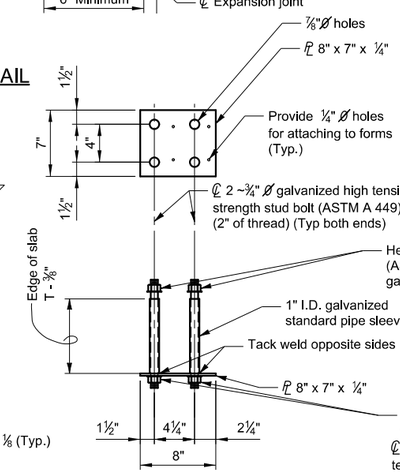

STANDARD SLAB

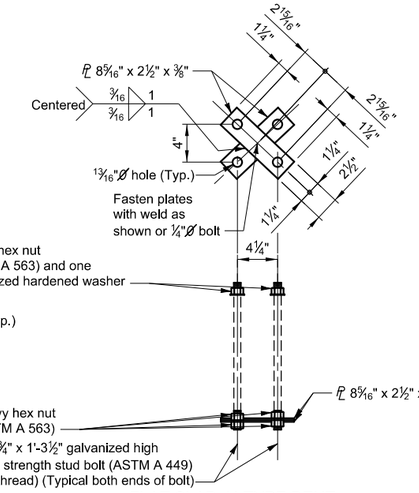

FLAT SLAB, U-TYPE BENT AND CURB

ANCHOR BOLT ASSEMBLY DETAIL

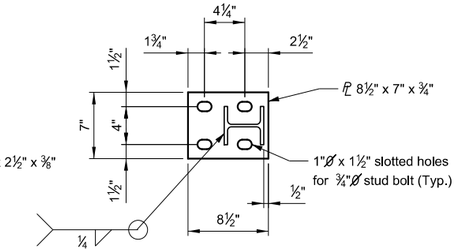

RAIL POST BASE PLATE

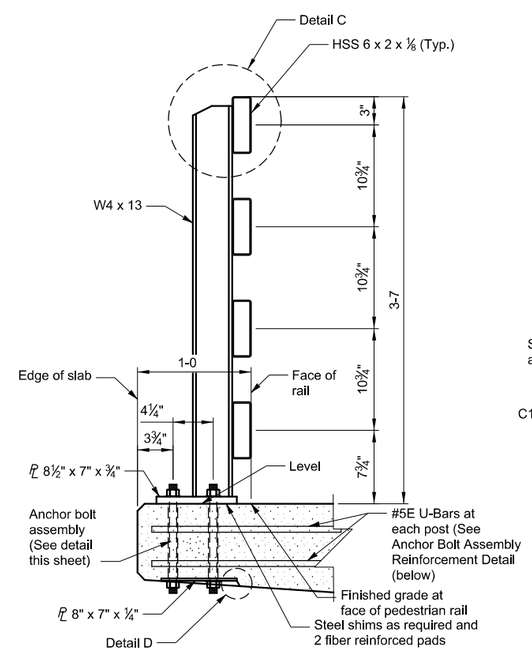

SECTION A

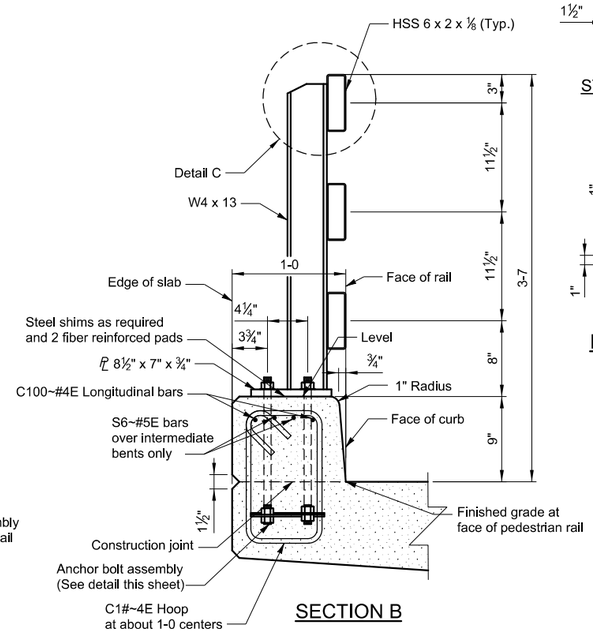

SECTION B

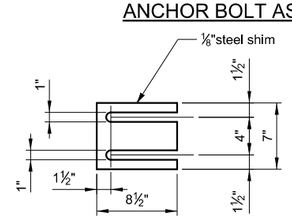

RAIL POST SHIM DETAIL

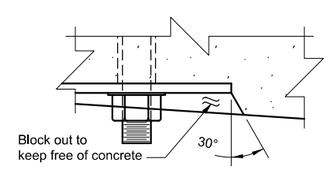

DETAIL D

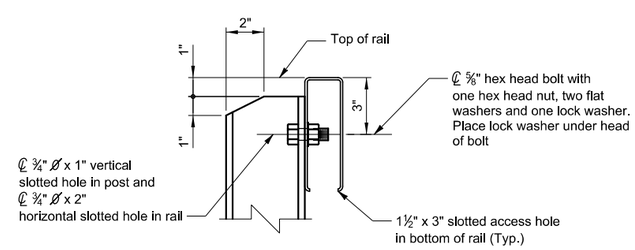

DETAIL C

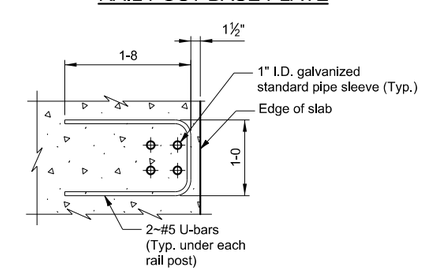

ANCHOR BOLT ASSEMBLY REINFORCEMENT

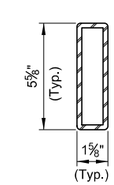

NOTE: Fabricate sleeves using channels, angles, plates, or bent plates meeting the dimensions shown. Weld and grind smooth as required. Fabricate sleeves using no more than four welds. Fabricate sleeves with a minimum wall thickness of ¼".

SPLICE FABRICATION OPTIONS

NOTES

GALVANIZING: Galvanize all bolts, nuts, washers and pipe sleeves in accordance with ASTM F 2329.

PAYMENT: Bridge Rail ~ Pedestrian is paid for by the linear foot, which is full compensation for all resources necessary to complete the item. The General Layout shows the number of linear feet of Bridge Rail ~ Pedestrian for payment. Use posts and plates conforming to AASHTO M 270 Grade 36 and ASTM A500 Grade B for the tubing.

ERECTION: Set the rail parallel to the roadway grade. Adjust the rail to the proper height using the vertical slots in the rail posts or shims under the posts.

PAINTING: Paint all posts, structural tubing and plates (except as noted) in accordance with the Standard Specifications. Galvanizing the posts, structural tubing and plates in accordance with AASHTO M 111 is allowed.

EXCEPTIONS: Use details shown on this drawing only as they apply to the project. Anchorage details may vary. Refer to other drawings for variations in these details.

FABRICATION: Consider this rail system an ancillary item for the purposes of fabrication. Meet the requirements of subsection 1.3.7 of AASHTO/AWS D1.5.

SHIMS: Place shims as necessary to adjust the rail to grade. Place the shims between fiber reinforced pads.

FIBER REINFORCED PADS: Use fiber reinforced pads meeting the requirements of subsection 711.16 of the Standard Specifications. Size and position the pads so that not less than ½"of the pad protrudes on all sides of the base plate. Punch slotted holes in the pads to match the base plate.

FINISHING: Finish the top of the slab or curb under each rail post to a smooth and uniform surface to assure a proper alignment of the post and a tight fit between the fiber reinforced pad and concrete. Bush hammering is acceptable only to remove high spots.

RAIL WEIGHT: For informational purposes only, the rail weight is approximately 33.5 lb/ft for a four-tube rail and 26.0 lb/ft for a three-tube rail.

REINFORCING: The suffix E denotes epoxy coated reinforcing.

STANDARD BRIDGE RAIL
TYPE PEDESTRIAN

No Scale

MDT MONTANA DEPARTMENT OF TRANSPORTATION
BRIDGE BUREAU

REVISED		
REVISED		
REVISED	3-15-17	D.F.J.
REVISED	6-24-14	T.J.B.
APPROVED	8-26-10	D.F.J.
CHECKED	10-29-09	N.N.M.
DRAWN	10-1-09	T.J.B.
$DATES	$TIMES	$FILEABBREVS

DRAWING NO.
SBR-PED

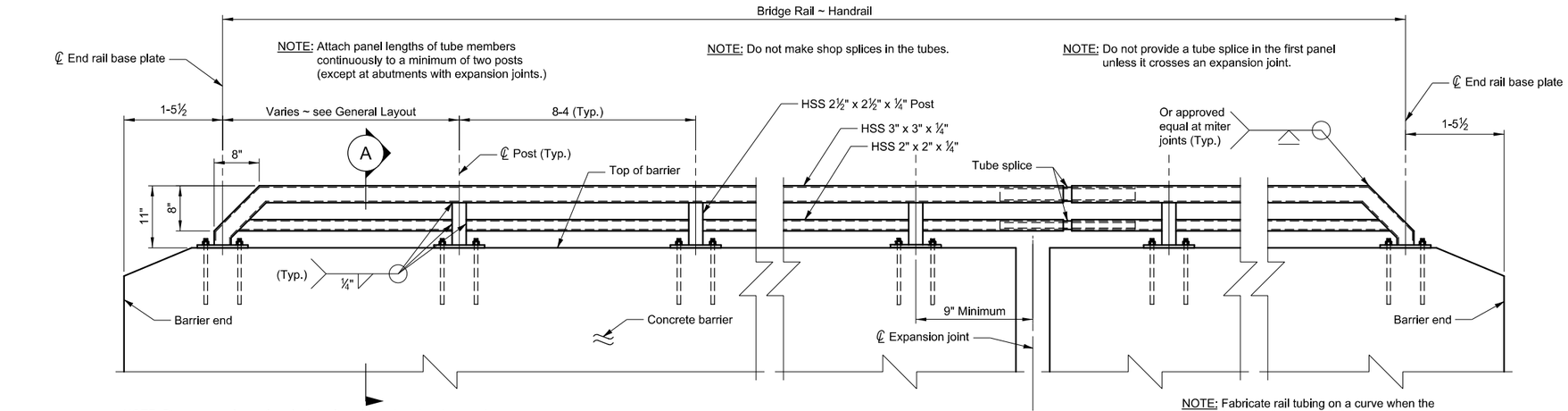

NOTE: Place expansion splices in the rail positioned so that they are between the same pair of rail posts as the expansion joint.

NOTE: Fabricate rail tubing on a curve when the face of rail radius is 600 feet or less.

INSIDE ELEVATION OF RAIL

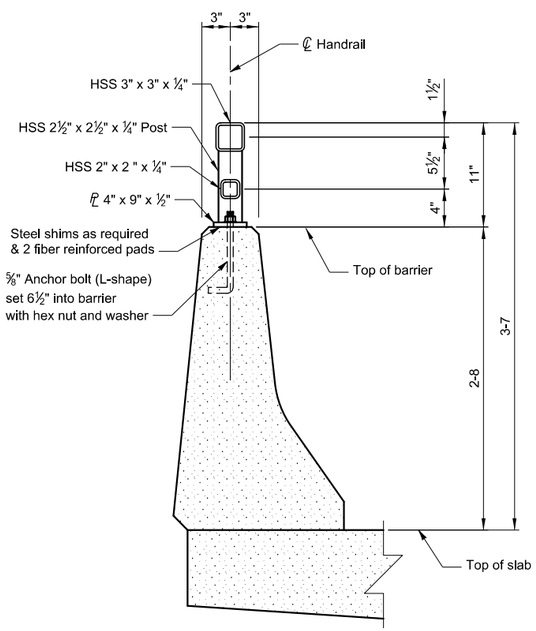

SECTION A

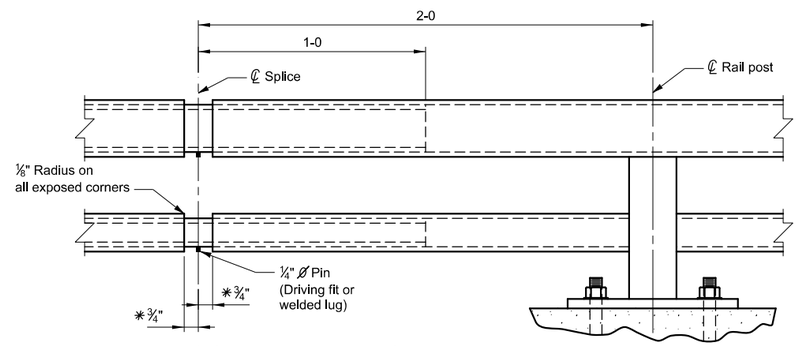

*NOTE: The dimension shown is for a standard tube splice. For splices crossing expansion joints, match the total width of the splice to the expansion gap shown elsewhere in the plans.

TUBE SPLICE DETAIL

NOTE: Fabricate sleeves using channels, angles, plates, or bent plates meeting the dimensions shown. Weld and grind smooth as required. Fabricate sleeves using no more than four welds. Fabricate sleeves with a minimum wall thickness of ¼".

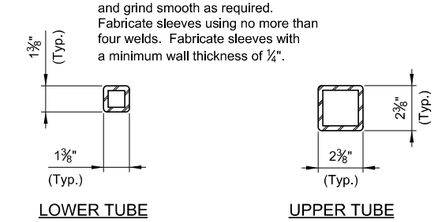

SPLICE FABRICATION OPTIONS

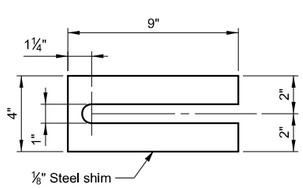

RAIL SHIM DETAIL

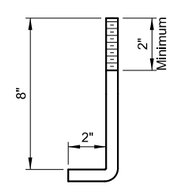

ANCHOR BOLT DETAIL

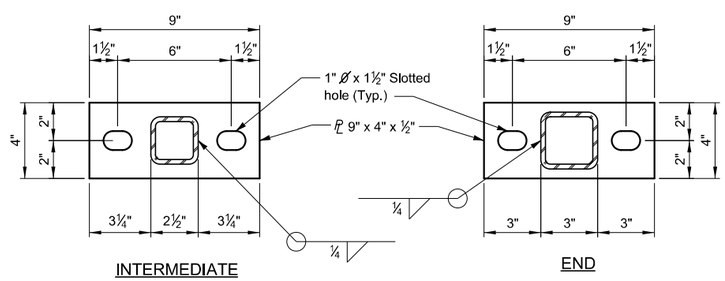

RAIL BASE PLATES

NOTES

GALVANIZING: Galvanize all bolts, nuts, washers and pipe sleeves in accordance with ASTM F 2329.

PAYMENT: Handrail is paid for by the linear foot, which is full compensation for all resources necessary to complete the item. The General Layout shows the number of linear feet of Handrail for payment. Use posts and plates conforming to AASHTO M 270 Grade 36 and tubing conforming to ASTM A500 Grade B. Use anchor bolts conforming to AASHTO M 314 Grade 36, nuts conforming to ASTM A 563 Grade A and washers conforming to ASTM F 844.

ERECTION: Set the rail parallel to the top of barrier. Adjust the rail to the proper rail height using rail post shims.

PAINTING: Paint all posts, structural tubing and plates (except as noted) in accordance with the Standard Specifications. Galvanizing the posts, structural tubing and plates in accordance with AASHTO M 111 is allowed.

EXCEPTIONS: Use details shown on this drawing only as they apply to the project. Anchorage details may vary. Refer to other drawings for variations in these details.

FABRICATION: Consider this rail system an ancillary item for the purposes of fabrication. Meet the requirements of subsection 1.3.7 of AASHTO/AWS D1.5.

SHIMS: Place shims as necessary to adjust the rail to grade. Place the shims between fiber reinforced pads with the slots toward oncoming traffic.

FIBER REINFORCED PADS: Use fiber reinforced pads meeting the requirements of subsection 711.16 of the Standard Specifications. Size and position the pads so that not less than ½"of the pad protrudes on all sides of the base plate. Punch slotted holes in the pads to match the base plate.

FINISHING: Finish the top of the barrier under each rail post to a smooth and uniform surface to assure a proper alignment of the post and a tight fit between the fiber reinforced pad and concrete. Bush hammering is acceptable only to remove high spots.

CONCRETE BARRIER: See Dwg. No. SBR-BRR for additional barrier details.

RAIL WEIGHT: For informational purposes only, the rail weight is approximately 15.4 lb/ft.

STANDARD BRIDGE RAIL
TYPE HANDRAIL

No Scale

MDT MONTANA DEPARTMENT OF TRANSPORTATION
BRIDGE BUREAU

REVISED		
REVISED		
REVISED		
REVISED	3-15-17	D.F.J.
APPROVED	8-26-10	D.F.J.
CHECKED	8-26-10	N.N.M.
DRAWN	10-1-09	T.J.B.
$DATE$	$TIME$	$FILEABBREV$

DRAWING NO.
SBR-HND

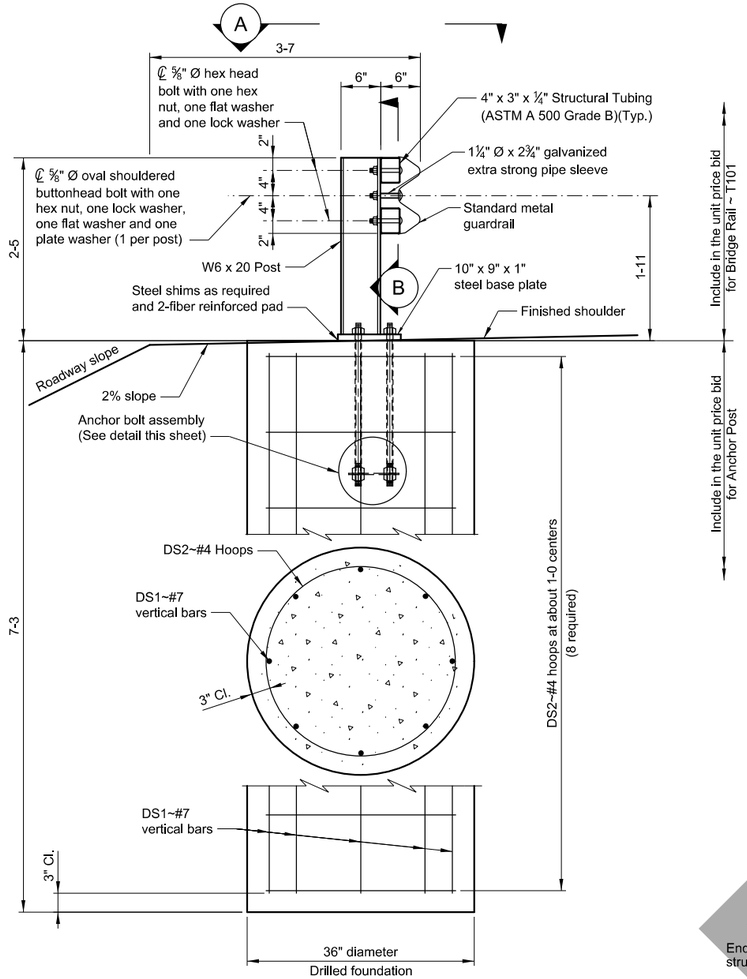

ELEVATION

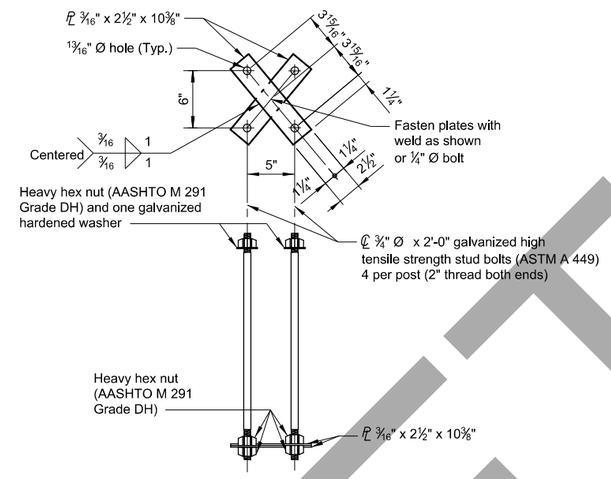

ANCHOR BOLT ASSEMBLY DETAIL

BILL OF REINFORCING STEEL

FOR ONE ANCHOR POST ONLY
(ALL DIMENSIONS ARE OUT TO OUT)

TYPE STR TYPE T3

Mark	Size	No.	Type	Length	A	B	C	D	E	G	N
DS1	#7	8	STR	6-10							
DS2	#4	8	T3	8-9	1-8			2-3			

NOTES

PAYMENT: Anchor Post is paid for at the unit price bid which is full compensation for all resources necessary to complete the item.

ERECTION: Set rail posts perpendicular to roadway grade and set rail parallel to the roadway grade. Adjust rail to proper rail height using vertical slots in the rail posts or rail post shims.

Use Class DD-Bridge Concrete. Estimated volume per foundation = 1.9 cubic yards

Use new deformed type reinforcing steel meeting the requirements of AASHTO M 31 Grade 60. Estimated rebar weight per foundation = 159 lbs.

Construct the portion of the approach fills, where the drilled foundation is constructed,of select material meeting the specified requirements for embankments.

See Std. Dwg. No. SBR-T101 for additional notes and details.

See Bridge Plans for location of the drilled foundations.

Finish the top of the foundation under each rail post to a smooth and uniform surface to assure a proper alignment of the post and a tight fit between the fiber reinforced pad and concrete.Bush hammering is acceptable only to remove high spots.

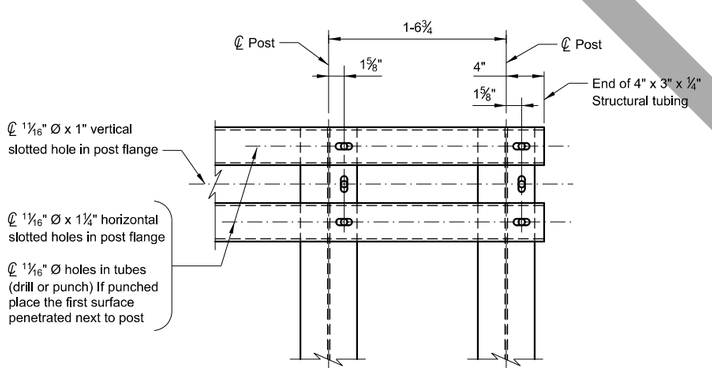

SECTION B

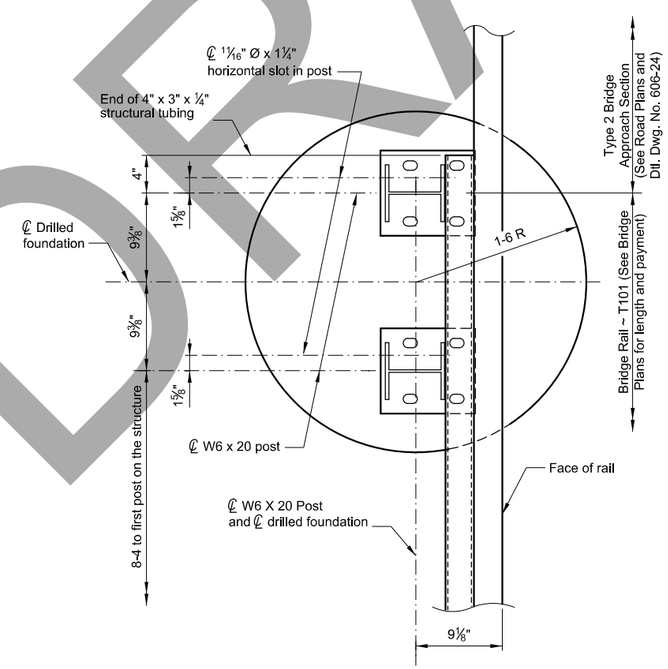

VIEW A

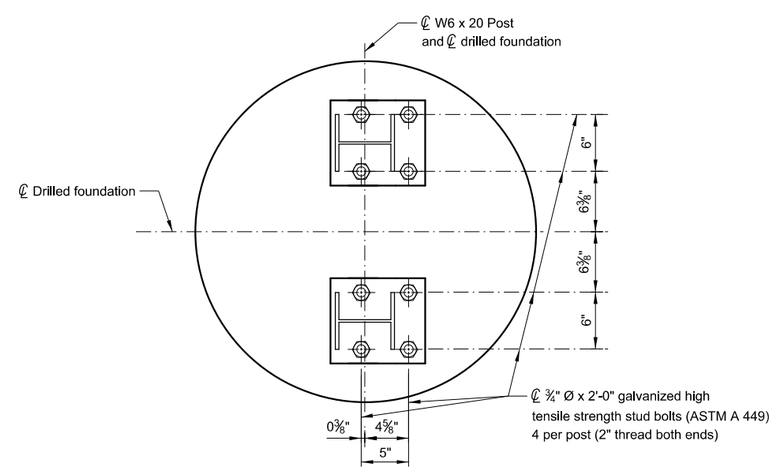

T101 POST ANCHOR BOLT LOCATION

DRILLED FOUNDATION
ANCHOR POST
PRELIMINARY
No Scale

MDT MONTANA DEPARTMENT OF TRANSPORTATION
BRIDGE BUREAU

REVISED		
REVISED		
REVISED		
REVISED		
APPROVED	XX-XX-XX	X.X.X.
CHECKED	XX-XX-XX	X.X.X.
DRAWN	12-29-16	T. J.B.
$DATE$	$TIME$	$FILEABBREV$

DRAWING NO.
DS

DRAFT

NOTES

GALVANIZING: Galvanize all bolts, nuts, washers and pipe sleeves in accordance with AASHTO M 232. Galvanize metal guardrail in accordance with ASTM Specification A 653 or AASHTO M 111.

REFLECTORS: Place a reflector on each end rail post and at approximately equal spacing (every third rail post but not to exceed 25 feet) between end rail posts. Mount reflectors with reflectorized face toward oncoming traffic.See Dtl. Dwg. No. 606-00 for reflector detail. Mount reflector to W-beam post web with an approved adhesive. Include the cost of the reflector in the unit price bid for Revise Timber Bridge Rail -T101.

PAYMENT: Revise Timber Bridge Rail - T101 is paid for by the linear foot which is full compensation for all resources necessary to complete the item. The number of linear feet of Revise Timber Bridge Rail - T101 for payment is the distance between centerlines of the drilled foundation anchor posts as shown on this sheet (See Summary Table below). Use posts and plates conforming to AASHTO M 270 Grade 36T3. Use metal guardrail conforming to AASHTO M 180 and lap in direction of traffic.

ERECTION: Set the rail parallel to the roadway grade. Set rail posts perpendicular to adjacent roadway grade and vertical in relation to roadway cross slopes. Adjust rail to proper rail height using vertical slots in rail posts.

PAINTING: Paint all posts, structural tubing and plates (except as noted) in accordance with the Standard Specifications. Galvanizing the posts, structural tubing and plates in accordance with AASHTO M 111 is allowed.

SELECT STRUCTURAL TIMBER FOR SOLID BRIDGING: Use standard sawn inter-mountain Douglas Fir, Western Larch or Pacific Coast Douglas Fir conforming to AASHTO M 168 meeting the requirements for numerical stress values shown on the table below for Dense No. 1 timber for solid bridging. Clearly note the grade of timber on the shop plans to avoid oversight. AASHTO classification for solid bridging is Beams and Stringers. Use treated timber meeting the requirements of Standard Specification Section 706.

DESCRIPTION	EXTREME FIBER IN BENDING Fb & TENSION PARALLEL TO GRAIN Ft		HORIZ. SHEAR Fv	COMPRESSION		MODULUS OF ELASTICITY E
				PERPENDICULAR TO GRAIN Fc ⊥	PARALLEL TO GRAIN Fc	
Solid Bridging	Fb	Ft	85	730	1100	1,700,000
	1550	775				

DIMENSIONS: Verify all dimensions in the field before ordering any materials and before fabrication is begun.

Details shown on this drawing apply to both sides for the entire length of the structure.

Remove existing rails, rail posts, curb and hardware as shown on this drawing. All removed items remain the property of the State. Set aside for pickup by State Forces. Removal costs are included in the unit price bid for Revise Timber Bridge Rail - T101.

Replace any timber which is to be incorporated in the rehabilitated structure that is damaged during construction at no additional cost to the State.

Chamfer edge of deck directly under location where ½" plate connects with rail post to clear fillet weld as shown in Detail A.

Plug open holes exposed by revisions with treated dowels. Thoroughly coat all new holes, cuts and chamfers as per Standard Specifications.

FABRICATION: For the purposes of fabrication, this rail system is considered an ancillary item. The requirements of subsection 1.3.6 of AASHTO/AWS D1.5 apply.

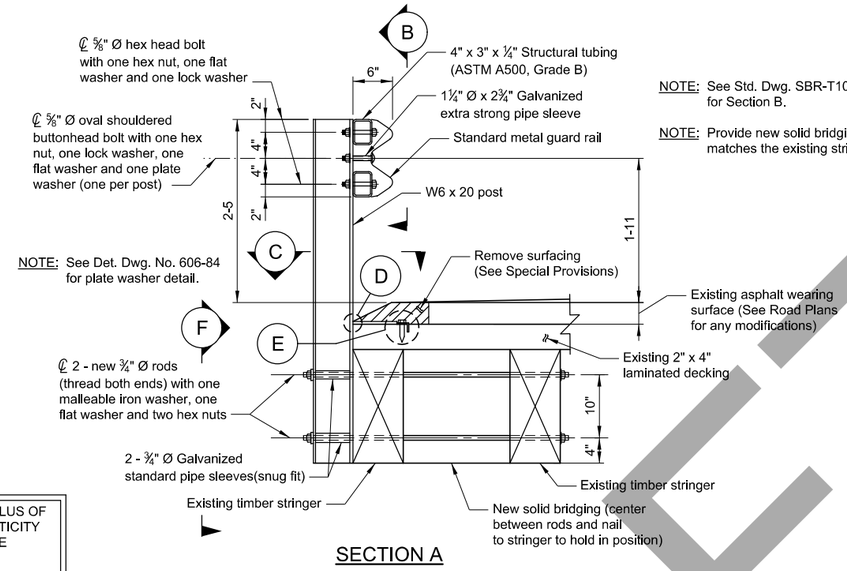

SECTION A

NOTE: See Std. Dwg. SBR-T101 for Section B.

NOTE: Provide new solid bridging that matches the existing stringer size.

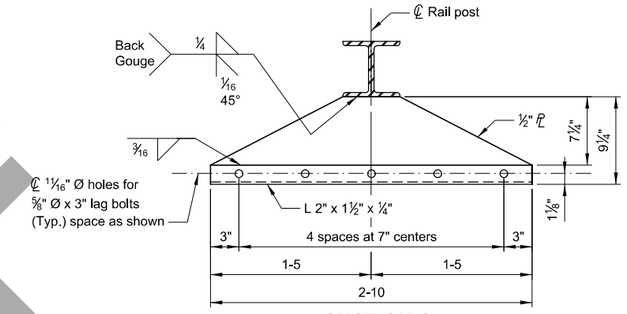

SECTION C

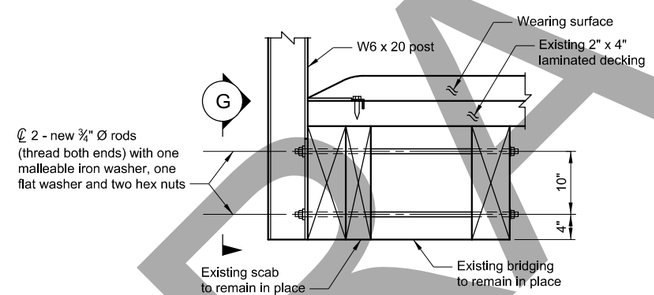

SECTION A
Post At ℄ Intermediate Bent

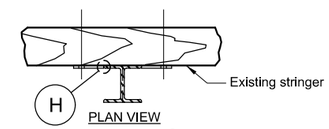

PLAN VIEW

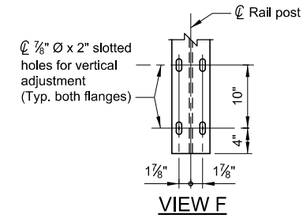

VIEW F

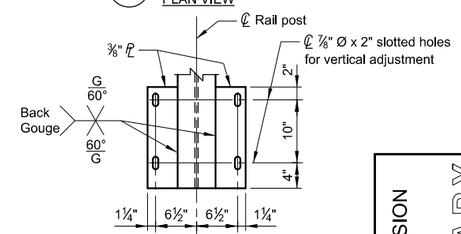

VIEW G

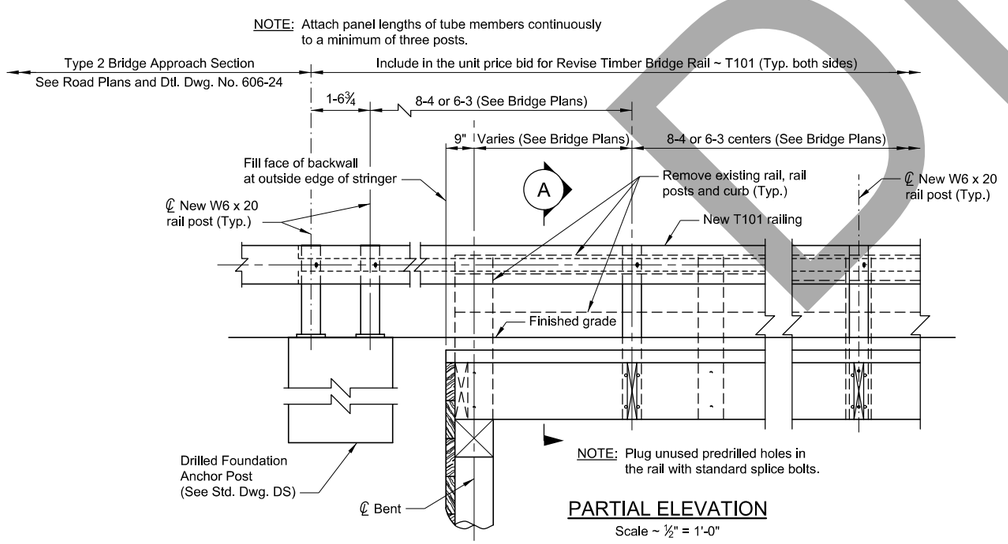

PARTIAL ELEVATION
Scale ~ ½" = 1'-0"

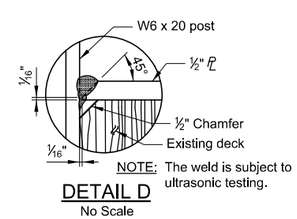

DETAIL D
No Scale

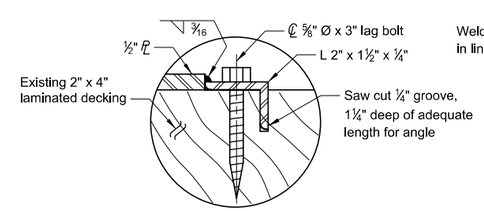

DETAIL E
No Scale

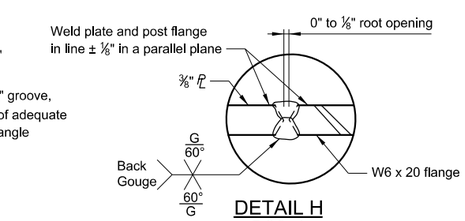

DETAIL H
Full Scale

TIMBER RAIL REVISION

PRELIMINARY

No Scale

MDT MONTANA DEPARTMENT OF TRANSPORTATION — BRIDGE BUREAU

REVISED		
REVISED		
REVISED		
REVISED		
APPROVED	XX-XX-XX	X.X.X.
CHECKED	XX-XX-XX	X.X.X.
DRAWN	12-29-16	T.J.B.
$DATE$	$TIME$	$FILEABBREV$

DRAWING NO.
TRR

DRAFT

NOTES

Locate the longitudinal and transverse ℄ of the load frame directly above the ℄ of the static load test pile.

The Load Cell, Hemispherical Bearing, Jack, Base Plate, Dial indicators and their support system, and Timber Blocks funished by the contractor. Include all costs associated with furnishing and installing these items in the unit price bid for Static Load Test.

Estimated weight of Static Load Test Frame for handling:
Full Assembly = 7.5 Tons
Girder Only = 6.0 Tons

Details shown for steel pipe piles. The details for H-Piles are similar except as noted.

Handle Static Load Test Frame by crane only.

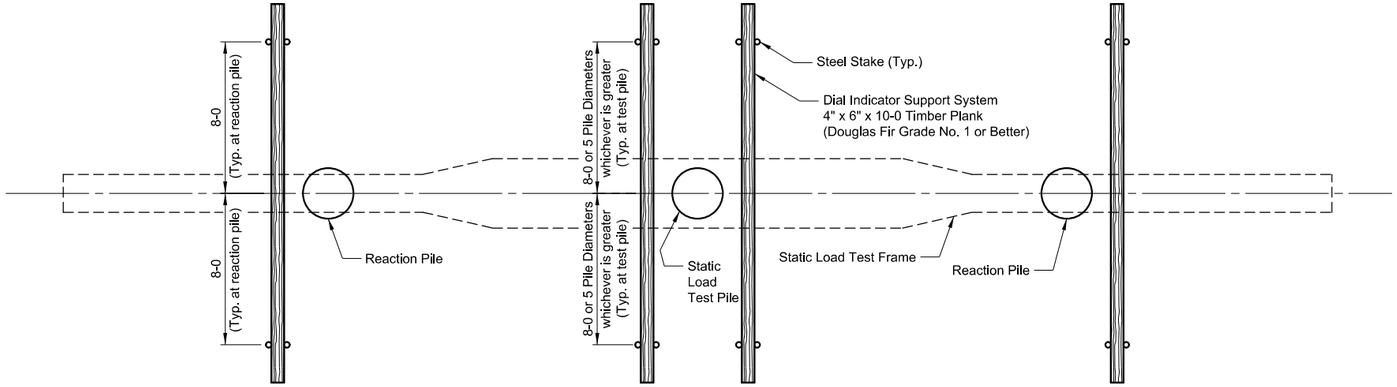

PLAN

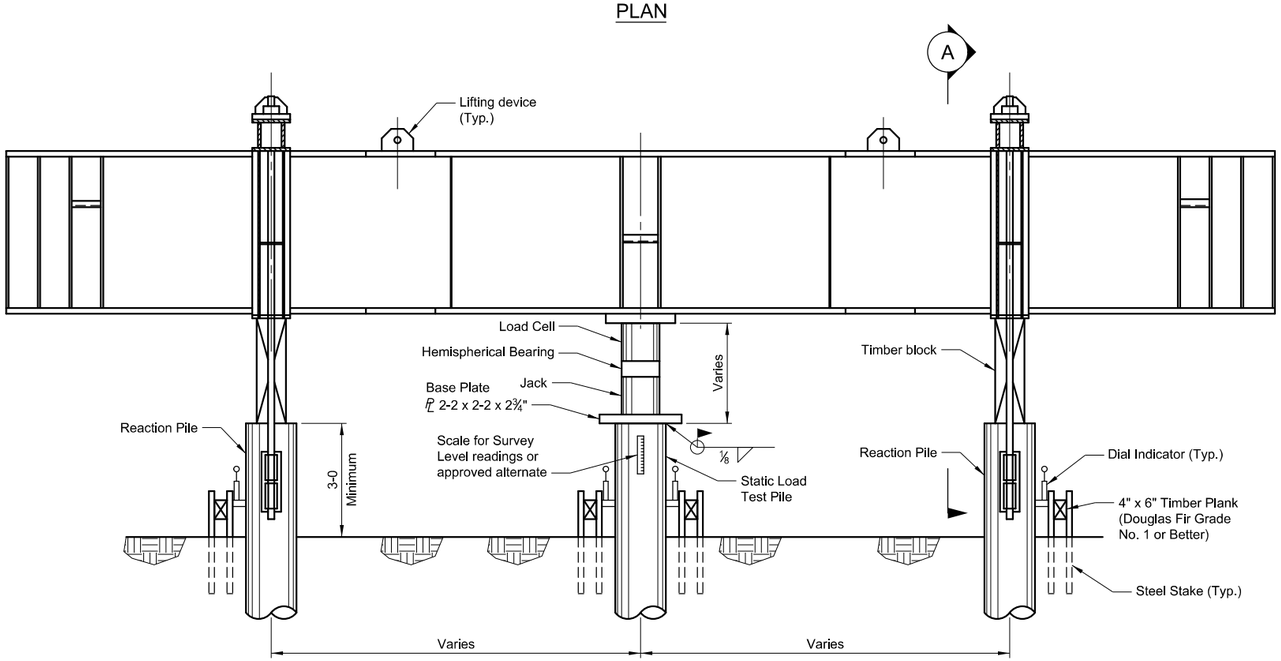

ELEVATION

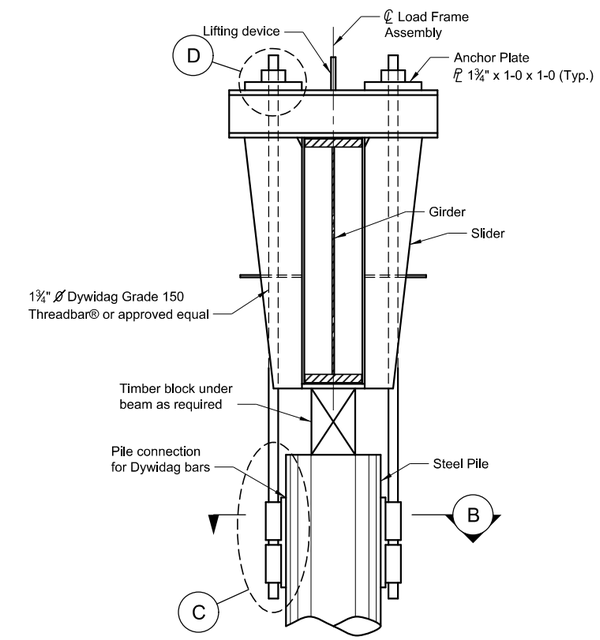

SECTION A

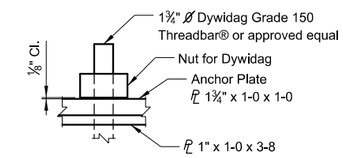

DETAIL D

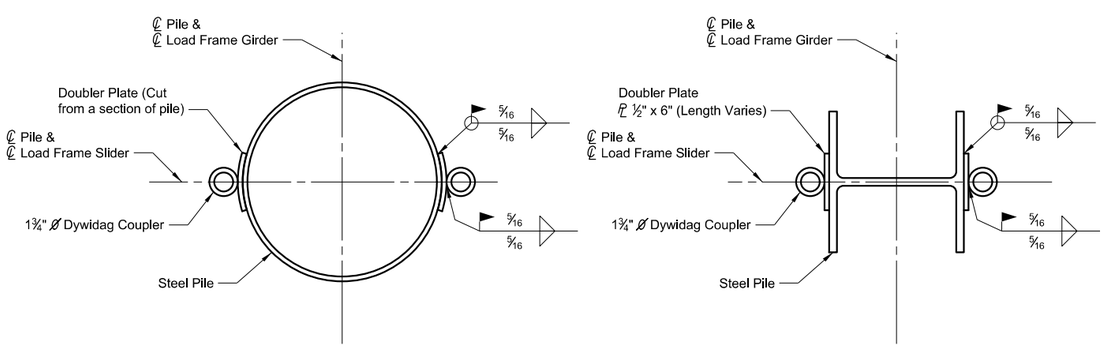

PIPE PILE

H-PILE

SECTION B

TABLE OF COUPLER LENGTH	
LOAD	MINIMUM REQUIRED COUPLER LENGTH
450	12"
550	15"
650	18"
750	21"

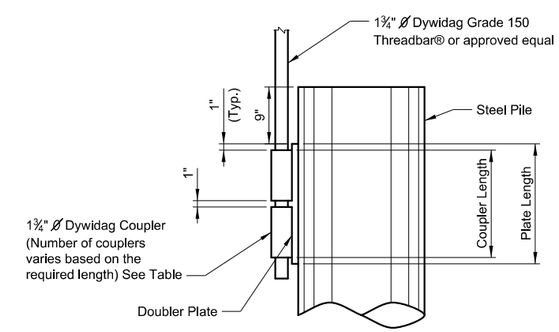

DETAIL C

STANDARD STATIC LOAD TEST FRAME FIELD SETUP DETAILS

No Scale

MDT MONTANA DEPARTMENT OF TRANSPORTATION

BRIDGE BUREAU

REVISED		
REVISED		
REVISED		
REVISED	3-5-14	T.J.B.
APPROVED	3-7-13	D.F.J.
CHECKED	3-6-13	C.W.H.
DRAWN	3-4-13	T.J.B.
$DATE$	$TIME$	$FILEABBREV$

DRAWING NO.
SLTF

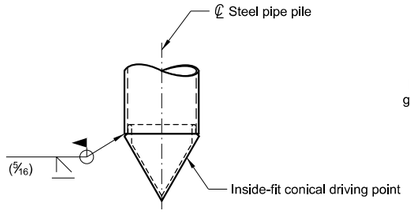

CONICAL DRIVING POINT WELD DETAIL

Slip driving point inside pipe.

NOTE: Refer to AWS D1.5 for prequalified joint designation B-U5a.

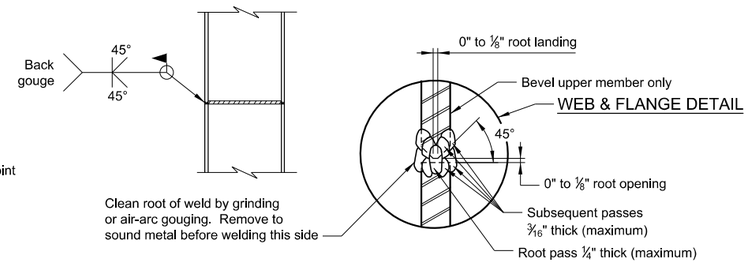

PILE EXTENSION AFTER DRIVING

(Pile Vertical)

NOTE: Refer to AWS D1.5 for prequalified joint designation B-U3b.

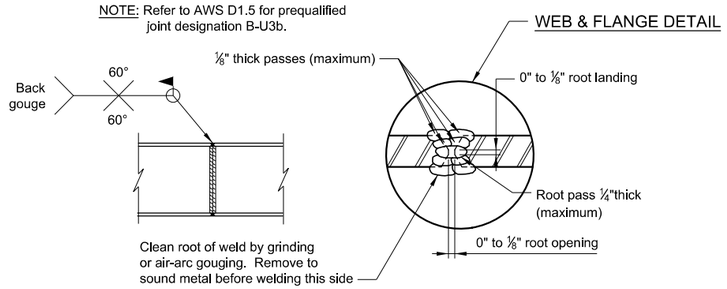

PILE EXTENSION BEFORE DRIVING

WELDED SPLICES FOR STEEL HP PILES

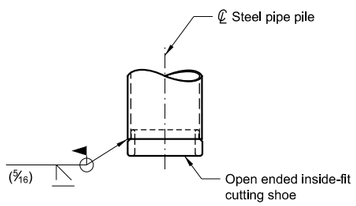

CUTTING SHOE WELD DETAIL

Slip shoe inside pipe.

NOTES

PILE SPLICES: Use only E7018 series electrodes. Prepare the weld surfaces to a smooth, uniform finish. Remove all fins, tears, loose scale, slag, rust, grease, moisture and other material that would prevent proper welding.

PILE TIPS: Use only E7018 series electrodes to attach pile tips.

PILE TYPE: See Footing Plan sheets for correct pile type, pile tip and pile tip elevations.

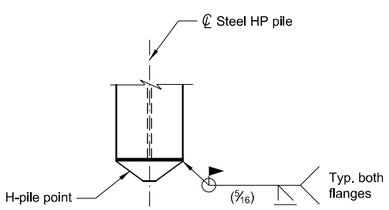

H-PILE POINT WELD DETAIL

Do not weld web or inside of flanges.

NOTE: Refer to AWS D1.1 for prequalified joint designation B-U4a.

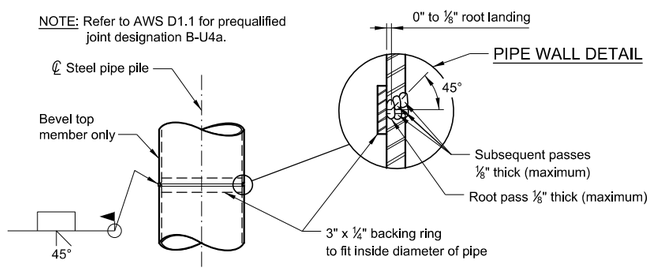

PILE EXTENSION AFTER DRIVING

(Pile Vertical)

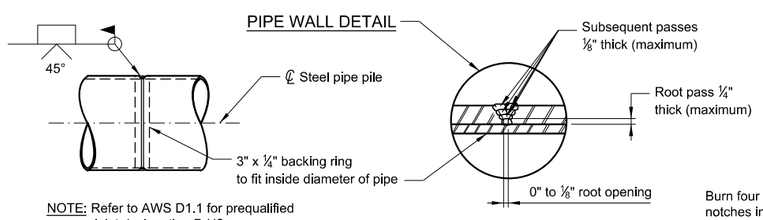

NOTE: Refer to AWS D1.1 for prequalified joint designation B-U2a.

PILE EXTENSION BEFORE DRIVING

WELDED SPLICES FOR STEEL PIPE PILES

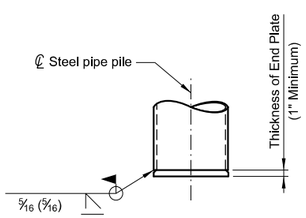

PLATE END WELD DETAIL

Align plate with outside of pipe.

FIRST STEP:
Burn or cut slits in valleys.

SECOND STEP:
Crimp with tool or use sledge.

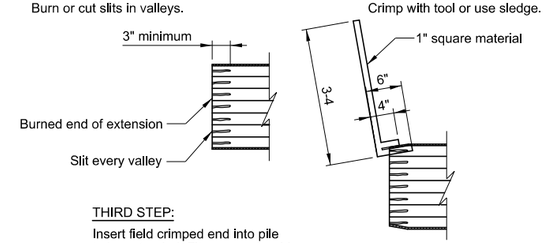

THIRD STEP:
Insert field crimped end into pile to be extended. Fit snug and weld.

FIELD CRIMPING DETAIL FOR CUT-OFF EXTENSIONS

Gage of Pile T	Weld Size S
9 gage (0.1495")	1/4"
7 gage (0.1793")	5/16"
5 gage (0.2092")	5/16"
3 gage (0.2391")	3/8"

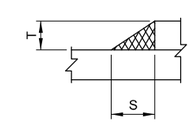

NOTE: Refer to AWS D1.1 for weld requirements.

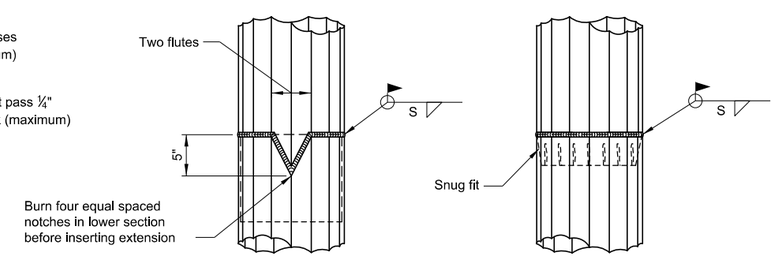

FACTORY CRIMPED EXTENSION

FIELD CRIMPED EXTENSION

WELDED SPLICES FOR STEEL FLUTED PILES

STANDARD PILE SPLICE DETAILS AND PILE TIPS

No Scale

MDT MONTANA DEPARTMENT OF TRANSPORTATION

BRIDGE BUREAU

REVISED		
REVISED		
REVISED		
REVISED		
APPROVED	1-30-15	D.F.J.
CHECKED	1-30-15	D.F.J.
DRAWN	1-23-15	T.J.B.
$DATES	$TIMES	$FILEABBREVS

DRAWING NO.
PSD

BRIDGE TABLES

SHEET – 1

QUANTITIES TABLE NEW

QUANTITIES TABLE REHAB MAJOR

QUANTITIES TABLE REHAB MINOR

SHEET – 2

HYDRAULIC BASE FLOOD

HYDRAULIC CANAL

HYDRAULIC DESIGN FLOOD

BULB – TEE DIMENSIONS

COORDINATE TABLE FOOTING

COORDINATE TABLE GRADING

CURVE DATA

DEAD LOAD DEFLECTION 1

DEAD LOAD DEFLECTION 2

DESIGN PARAMETERS PRESTRESS

DESIGN PILE INFORMATION

DESIGN DS INFORMATION

EXPANSION GAPS

EXPANSION GAPS WITH ADJUSTMENT

SHOE FIXED ADJUSTMENTS

SHOE MOVEMENTS

SHOE MOVEMENTS WITH ADJUSTMENT

TABLE OF ELEVATIONS

SHEET – 3

BEARING DESIGN

CAMBER TABLE

DESIGN INFO STEEL

FIELD SPLICE PLATES

GIRDER DATA

GIRDER THROW

STRINGLINE SLOPE

SHEET – 4

ABBREVIATIONS

BAR MARKS LOCATION

BARRIER LENGTHS

DECK CONDITIONS SURVEY SUMMARY

POST TENSION TENDONS

REBAR LAP LENGTHS

REMOVAL & OVERLAY DEPTHS

WORK SUMMARY

FORM: QUANTITIES_TABLE_NEW
REVISED: 5/1/17

ESTIMATED BRIDGE PLAN QUANTITIES

MDT STRUCTURE NUMBER XXXXX LOCATION	LENGTH (FT)	CONCRETE CLASS - STRUCTURE (YD^3)	CONCRETE CLASS - DECK (YD^3)	TRANSVERSE DECK GROOVING (YD^2)	PRESTRESSED BEAMS TYPE XXX (FT)	REINFORCING STEEL		BRIDGE RAIL T101 (FT)	RE-DRIVE TEST PILE (EACH)	STATIC LOAD TEST (EACH)	DYNAMIC LOAD TEST (EACH)	16" X 1/2" WALL THICKNESS STEEL PIPE PILES		CONICAL DRIVING POINT (EACH)
						REGULAR (LB)	EPOXY (LB)					FURNISH (FT)	DRIVE (FT)	
BENT NO. 1														
BENT NO. 2														
SUPERSTRUCTURE														
TOTAL	0	0	0	0	0	0	0	0	0	0	0	0	0	0

FORM: QUANTITIES_TABLE_REHAB_MINOR
REVISED: 5/1/17

ESTIMATED BRIDGE PLAN QUANTITIES

MDT STRUCUTRE ID	FEATURE CROSSED	ROUTE	REFERENCE POINT	ROADWAY	GENERAL LAYOUT DRAWING NO.	TRANSVERSE DECK GROOVING (YD^2)	REVISE JOINT (LN. FT.)	JOINT SEALS POLYURETHANE (LN. FT.)	BRIDGE DECK MILLING (YD^2)	CLASS A BRIDGE DECK REPAIR (YD^2)	CLASS B BRIDGE DECK REPAIR (YD^2)	* MODIFIED CONCRETE OVERLAY (YD^2)	POLYMER OVERLAY (YD^2)	PREPARE DECK (YD^2)	REVISE BRIDGE RAIL - CONCRETE BARRIER (LN. FT.)
					PROJECT TOTAL	0.0	0.0	0.0	0	0.0	0.0	0.0	0.0	0.0	0.0

* NOTE: Concrete - Class Overlay quantities are based on the minimum overlay thickness specified on Sheet No. B3. Hydrodemolition may result in increased removal limits and increased overlay quantities.

FORM: QUANTITIES_TABLE_REHAB_MAJOR
REVISED: 5/1/17

ESTIMATED BRIDGE PLAN QUANTITIES

MDT STRUCTURE ID FEATURE CROSSED ROUTE / REFERENCE POINT / RDWY GENERAL LAYOUT DWG. NO.	LOCATION	REMOVE DECK (YD^2)	CONCRETE CLASS - DECK (YD^3)	TRANSVERSE DECK GROOVING (YD^2)	BRIDGE DECK HYDRODEMOLITION (YD^2)	REINFORCING STEEL EPOXY (LB)	CLASS A REPAIR (YD^2)	CLASS B REPAIR (YD^2)	CONCRETE LATEX MODIFIED (YD^3)
	BENT NO. 1								
	BENT NO. 2								
	SUPER STRUCTURE								
	SUBTOTAL	0	0	0	0	0	0	0	0
	BENT NO. 1								
	BENT NO. 2								
	SUPER STRUCTURE								
	SUBTOTAL	0	0	0	0	0	0	0	0
PROJECT TOTAL									

BRIDGE TABLES SHEET - 1

FORM: HYDRAULIC_BASE_FLOOD
REVISED: 5/1/17 (7)

HYDRAULIC DATA	
Drift:	X
Ice:	X
Low Scour Elevation (Q100):	XXXX.XX
Drainage Area:	X sq. mi.
Ordinary High Water Elevation:	XXXX.XX
Q2 Elevation:	XXXX.XX
QXX Elevation (Road):	XXXX.XX
* Q100 Flow:	X cfs
Q100 Elevation	XXXX.XX
Q100 Velocity	X fps
Actual Low Beam Elevation:	XXXX.XX
Allowable Low Beam Elevation:	XXXX.XX

Also see Hydraulic Data Summary sheet.
* Q100 Elevation includes backwater.

FORM: HYDRAULIC_DESIGN_FLOOD
REVISED: 5/1/17 (7)

HYDRAULIC DATA	
Drift:	X
Ice:	X
Low Scour Elevation (Q100):	XXXX.XX
Drainage Area:	X sq. mi.
Ordinary High Water Elevation:	XXXX.XX
Q2 Elevation:	XXXX.XX
QXX Elevation (Road):	XXXX.XX
* Q100 Elevation:	XXXX.XX
* QXX Elevation:	XXXX.XX
QXX Velocity:	X fps
QXX Flow:	X cfs
Actual Low Beam Elevation:	XXXX.XX
Allowable Low Beam Elevation:	XXXX.XX

Also see Hydraulic Data Summary sheet.
* Q100 and QXX Elevation includes backwater.

FORM: HYDRAULIC_CANAL
REVISED: 5/1/17

HYDRAULIC DATA	
Drift:	X
Ice:	None
Low Scour Elevation:	None
Q2 Elevation:	XXXX.XX
Design Flow:	X cfs
Design Elevation:	XXXX.XX
Design Velocity:	X fps
Actual Low Beam Elevation:	XXXX.XX
Allowable Low Beam Elevation:	XXXX.XX

FORM: CURVE_DATA
REVISED: 5/1/17

CURVE DATA		
PI	=	X
Δ	=	X
R	=	X
R_c	=	X
L_s	=	X
θ_s	=	X
Δ_s	=	X
T	=	X
T_s	=	X
L_s	=	X
L_c	=	X
E	=	X
E_s	=	X
S	=	X
e	=	X

FORM: SHOE_MOVEMENTS_W_ADJUSTMENT
REVISED: 5/1/17

TABLE OF EXPANSION SHOE MOVEMENTS

LOCATION		TEMPERATURE (ºF)						Adjustment for 1/8" movement (ºF)
		-40	0	38	60	90	115	
BENT NO. 1	A							XXX ºF
	B							
BENT NO. 4	A							XXX ºF
	B							

FORM: SHOE_FIXED_ADJUSTMENTS
REVISED: 5/1/17

TABLE OF FIXED SHOE ADJUSTMENTS

LOCATION		TEMPERATURE (ºF)								
		-40	-20	0	20	38	60	80	100	115
BENT NO. 2	A									
	B									
BENT NO. 3	A									
	B									

FORM: COORD_TABLE_GRADING
REVISED: 5/1/17

COORDINATE TABLE

POINT NUMBER	N OR Y COORDINATE	E OR X COORDINATE	RPRAP ELEVATION	FINISHED GRADE ELEVATION	STATION	OFFSET (FT)	DESCRIPTION

APPLICABLE FOOTNOTES
(7)

FORM: SHOE_MOVEMENTS
REVISED: 5/1/17

TABLE OF EXPANSION SHOE MOVEMENTS

MARK	TEMPERATURE (ºF)						
	-40	-15	0	38	60	90	115
A							
B							

FORM: COORD_TABLE_FOOTING
REVISED: 5/1/17

COORDINATE TABLE

LOCATION	N OR Y COORDINATE	E OR X COORDINATE	DESCRIPTION

FORM: EXPANSION_GAPS
REVISED: 5/1/17

TABLE OF EXPANSION GAPS

LOCATION	TEMPERATURE (ºF)						
	-40	-15	0	38	60	90	115
BENT NO. 1							

NOTE: Change in temperature for 1/8" of movement = X.X ºF

FORM: EXPANSION_GAPS_W_ADJUSTMENT
REVISED: 5/1/17

TABLE OF EXPANSION GAPS

	TEMPERATURE (ºF)						Adjustment for 1/8" movement (ºF)	Total Movement (in)
	-40	0	38	60	90	115		
BENT NO. 1							XXX ºF	
BENT NO. 4							XXX ºF	

FORM: BULB_TEE_DIMENSIONS
REVISED: 5/1/17

BULB - TEE DIMENSIONS

LOCATION	INTERIOR BEAM	EXTERIOR BEAM
HEIGHT		
WEB		
WIDTH		
A		
B		
FLANGE THICKNESS		

FORM: TABLE_OF_ELEVATIONS
REVISED: 5/1/17

TABLE OF ELEVATIONS

ELEVATION	BENT NO. 1	BENT NO. 2
A		
B		
C		
D		
E		

FORM: DESIGN_PARM_PRESTRESS
REVISED: 5/1/17

PRESTRESSED BEAM DESIGN PARAMETERS

AASHTO Specifications	LRFD 7th edition with 2014 interims
Structure Type	Simple Span
Deck Concrete Strength	4000 psi
Deck Concrete Density	150 lb/ft^3
Prestressing Strand	270 ksi Low Relaxation - (0.500" or 0.600" diameter)
Shear Reinforcing	AASHTO M 31 Grade 60
Alternate Shear Reinforcing	Welded Wire Reinforcement - AASHTO M5S, M221, or MS4
Section Property Calculations	Gross Section
Prestress Loss Method	Approximate Losses per LRFD 5.9.5 and 5.9.5.3
Shear Computation Method	Sectional Model per LRFD 5.8.3
Beam / Slab Interface	Intentionally Roughened to 1/4" amplitude
Load Rating Requirements	AASHTO LRFR Design Load

PRESTRESSED BEAM LOAD TABLE

LOAD TYPE	LOADS	APPLICATION METHOD
Barrier Load	XXX kip/ft per rail	Equally to all beams
Future Wearing Surface	10 lb/ft^2 applied between curbs	Equally to all beams
Interior Diaphragm	XXX kip/diaphragm	At point load
Exterior Diaphragm	XXX kip/diaphragm	At point load
Additional Dead Load	--------	--------
Live Load	LRFD - HL-93	per AASHTO LRFD

FORM: DESIGN_DS_INFORMATION
REVISED: 5/1/17

DRILLED SHAFT INFORMATION

LOCATION	DESIGN DRILLED SHAFT TIP ELEVATION	TOP OF DRILLED SHAFT ELEVATION	ESTIMATED DRILLED SHAFT LENGTH (FT)	APPROXIMATE GROUND ELEVATION	APPROXIMATE LENGTH OF DRILLED SHAFT BELOW GROUND
BENT NO. 1			0.00		0.00
BENT NO. 2			0.00		0.00

FORM: DESIGN_PILE_INFORMATION
REVISED: 5/1/17

PILE INFORMATION

LOCATION	DESIGN PILE TIP ELEVATION	MAXIMUM PILE CUT-OFF ELEVATION (FT)	PILE TIP TREATMENT	REQUIRED BEARING RESISTANCE DURING DRIVING (KIP)	MAXIMUM PILE REACTION UNDER SERVICE I
BENT NO. 1					
BENT NO. 2					

FORM: DEAD_LOAD_DEFL_(1)
REVISED: 5/1/17

DEAD LOAD DEFLECTION TABLE

TYPE XXX PRESTRESSED CONCRETE BEAM					
SPAN LENGTH	TENTH POINT				
	0.1	0.2	0.3	0.4	0.5
XXX' - 0"					

NOTE: Deflections symmetrical about 0.5 point and do not include beam dead load.

FORM: DEAD_LOAD_DEFL_(2)
REVISED: 5/1/17

DEAD LOAD DEFLECTION TABLE

TYPE XXX PRESTRESSED CONCRETE BEAM						
SPAN LENGTH		TENTH POINT				
		0.1	0.2	0.3	0.4	0.5
XXX' - 0"	INT.					
	EXT.					

NOTE: Deflections symmetrical about 0.5 point and do not include beam dead load.

BRIDGE TABLES SHEET - 2

FORM: CAMBER_TABLE_STEEL
REVISED: 5/1/17

TABLE OF CAMBER INFORMATION

	LOCATION	SPAN 1											SPAN 2												SPAN 3										
		1.0	1.1	1.2	1.3	1.4	1.5	1.6	1.7	1.73 FS	1.8	1.9	2.0	2.1	2.2	2.29 FS	2.3	2.4	2.5	2.6	2.7	2.8	2.83 FS	2.9	3.0	3.1	3.2	3.3	3.31 FS	3.4	3.5	3.6	3.7	3.8	3.9	4.0
GIRDER G1 & G4 (EXTERIOR GIRDERS)	DIAPHRAGM & GIRDER DEFLECTION	0											0												0											0
	SLAB, HAUNCH, & COMPOSITE D.L. DEFLECTION	0											0												0											0
	TOTAL D.L. DEFLECTION	0											0												0											0
	VERTICAL CURVE	0											0												0											0
	TOTAL CAMBER	0											0												0											0
GIRDER G2 & G3 (INTERIOR GIRDERS)	DIAPHRAGM & GIRDER DEFLECTION	0											0												0											0
	SLAB, HAUNCH, & COMPOSITE D.L. DEFLECTION	0											0												0											0
	TOTAL D.L. DEFLECTION	0											0												0											0
	VERTICAL CURVE	0											0												0											0
	TOTAL CAMBER	0											0												0											0

FORM: DESIGN_INFO_STEEL
REVISED: 5/1/17

TABLE OF DESIGN INFORMATION

		SPAN NO. 1		SPAN NO. 2		SPAN NO. 3		BENT NO. 1		BENT NO. 2		BENT NO. 3		BENT NO. 4	
		GIRDER G1 & G4	GIRDER G2 & G3	GIRDER G1 & G4	GIRDER G2 & G3	GIRDER G1 & G4	GIRDER G2 & G3	GIRDER G1 & G4	GIRDER G2 & G3	GIRDER G1 & G4	GIRDER G2 & G3	GIRDER G1 & G4	GIRDER G2 & G3	GIRDER G1 & G4	GIRDER G2 & G3
MOMENT	DL														
	LL + I														
REACTION	DL														
	LL + I														
SHEAR	DL														
	LL + I														
DEFLECTION	DL														
	LL + I														

FORM: STRING_LINE_SLOPE
REVISED: 5/1/17

STRING LINE SLOPE TABLE (%)

SPAN NO. 1	SPAN NO. 2	SPAN NO. 3

FORM: GIRDER_THROW
REVISED: 5/1/17

GIRDER THROW CALCULATIONS

BENT NO. 1		BENT NO. 2		BENT NO. 3		BENT NO. 4	
Ts	Tw	Ts	Tw	Ts	Tw	Ts	Tw

FORM: GIRDER_DATA
REVISED: 5/1/17

TABLE OF GIRDER DATA

	DIMENSION				
	A	B	C	D	E
GIRDER G1					
GIRDER G2					
GIRDER G3					
GIRDER G4					
CL ROADWAY					

FORM: FIELD_SPLICE_PLATES
REVISED: 5/1/17

FIELD SPLICE PLATE INFORMATION

MEMBER	FIELD SPLICE 1		FIELD SPLICE 2		FIELD SPLICE 3	
	SECTION A	SECTION B	SECTION A	SECTION B	SECTION A	SECTION B
TOP FLANGE TOP PLATE						
TOP FLANGE FILLER PLATE	---		---		---	
TOP FLANGE						
TOP FLANGE BOTTOM PLATE						
BOTTOM FLANGE TOP PLATE						
BOTTOM FLANGE						
BOTTOM FLANGE FILLER PLATE	---		---		---	
BOTTOM FLANGE BOTTOM PLATE						

FORM: BEARING_DESIGN
REVISED: 5/1/17

BEARING DESIGN TABLE (SERVICE I LIMIT STATE)

AASHTO Design Method	
Elastomer Grade	
Elastomeric Pad Unloaded Height	
Total Bearing Assembly Unloaded Height	
Shear Modulus at 73 ^{0}F	
Dead Load Reaction	
Live Load Reaction (without impact)	

FORM: WORK_SUMMARY
REVISED: 5/1/17

BRIDGE WORK SUMMARY										
MDT STRUCTURE ID	CLASS A DECK REPAIR	CLASS B DECK REPAIR	THICK CONCRETE OVERLAY	TRANSVERSE DECK GROOVING	THIN POLYMER OVERLAY	BRIDGE DECK CRACK SEAL	REVISE BRIDGE RAIL	JOINT SEALS POLYURETHANE	REPLACE EXPANSION JOINT	REMOVE GUARD ANGLE

FORM: DECK_CONDITION_SURVEY_SUMMARY
REVISED: 5/1/17

DECK CONDITION SURVEY SUMMARY			
MDT STRUCTURE ID	DELAMINATED AREA (SQ YD)	AVERAGE COMPRESSIVE STRENGTH (PSI)	DATE OF SURVEY

A bridge deck condition survey was performed on this structure. The complete set of field investigation and test results is considered too voluminous to include in the bidding package. This information is available for review upon request. Contact the Inspection Operations Supervisor at (406) XXX-XXXX to review the full testing information. Bridge deck condition surveys are not warranted to be representative of the actual conditions encountered.

FORM: REMOVAL_&_OVERLAY_DEPTHS
REVISED: 5/1/17

TABLE OF REMOVAL AND OVERLAY DEPTHS				
MDT STRUCTURE ID	DECK TREATMENT	REMOVAL DEPTH (IN)	OVERLAY THICKNESS (IN)	TOTAL GRADE RAISE (IN)

FORM: POST_TENSION_TENDONS
REVISED: 5/1/17

TRANSVERSE VOIDED SLAB TENDONS					
NUMBER & SIZE	STRESSEING FORCE (kips)	TENDON LENGTH (ft)	WEIGHT / TENDON (lbs)	NUMBER OF TENDONS	TOTAL WEIGHT (lbs)

FORM: BARRIER LENGTHS
REVISED: 5/1/17

BARRIER LENGTHS		
	Right Side	
	Left Side	
	Right Side	
	Left Side	
	Right Side	
	Left Side	
	Right Side	
	Left Side	

FORM: ABBREVIATIONS
REVISED: 5/1/17

ABBREVIATIONS	
F.F.	Fill Face
N.F.	Near Face
E.F.	Each Face
B.C.	Bottom of Cap
B.F.	Bottom of Footing
T.C.	Top of Cap
T.F.	Top of Footing
The suffix E denotes epoxy coated reinforcing	

FORM: BAR_MARKS_LOCATIONS
REVISED: 5/1/17

REINFORCING STEEL BAR MARK LOCATIONS	
BAR MARK	LOCATION
C	CAP
B	BARRIER
BS	BEAM SEATS
BW	BACKWALL
CL	COLUMN
CW	CURTAIN WALL
DS	DRILLED SHAFT
FW	FACIA WALL
P	PIER
R	RAIL
T	TIES
WW	WINGWALL

FORM: REBAR_LAP_LENGTHS
REVISED: 5/1/17

REINFORCING STEEL LAP LENGTHS	
BAR DIAMETER	LAP LENGTH
#3 OR #3W	1-4
#4 OR #4W	1-9
#5 OR #5W	2-2
#6 OR #6W	2-7
#7 OR #7W	3-3
#8 OR #8W	4-3
#9 OR #9W	5-4
#10 OR #10W	6-9
#11 OR #11W	8-4
#14 OR #14W	Mechanical Splice Only
#18 OR #18 W	Mechanical Splice Only
#3E	1-11
#4E	2-7
#5E	3-3
#6E	3-10
#7E	4-10
#8E	6-4
#9E	8-0
#10E	10-2
#11E	12-6
#14E	Mechanical Splice Only
#18E	Mechanical Splice Only

BRIDGE TABLES SHEE - 4

MISCELLANEOUS DETAILS

STANDARD REBAR BENDS AND HOOKS

STANDARD REBAR SHAPE CELLS – SHEET 1

STANDARD REBAR SHAPE CELLS – SHEET 2

OLD STANDARD BRIDGE RAILS

STANDARD BRIDGE BORDER – QSHEET

STANDARD BRIDGE BORDER – QSHEET CNST

STANDARD BRIDGE BORDER

RECOMMENDED END HOOKS					
BAR SIZE	D	180° HOOKS		90° HOOKS	OUTSIDE RADIUS
		A or G	J	A or G	
# 3	2¼"	5"	3"	6"	1½"
# 4	3"	6"	4"	8"	2"
# 5	3¾"	7"	5"	10"	2½"
# 6	4½"	8"	6"	1-0	3"
# 7	5¼"	10"	7"	1-2	3½"
# 8	6"	11"	8"	1-4	4"
# 9	9½"	1-3	11¾"	1-7	5⅞"
#10	10¾"	1-5	1-1¼	1-10	6⅝"
#11	1-0	1-7	1-2¾	2-0	7 7/16"
#14	1-6¼	2-3	1-9¾	2-7	10 13/16"
#18	2-0	3-0	2-4½	3-5	1-2¼

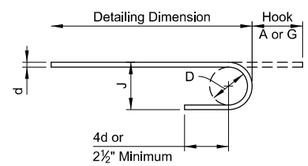

180° HOOK

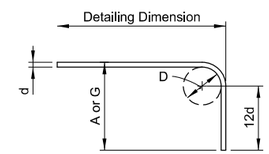

90° HOOK

STIRRUP / TIE HOOK					
BAR SIZE	D	90° HOOKS	135° HOOKS		OUTSIDE RADIUS
		A or G	A or G	H (approx)	
# 3	1½"	4"	4"	2½"	1⅛"
# 4	2"	4½"	4½"	3"	1½"
# 5	2½"	6"	5½"	3¾"	1⅞"
# 6	4½"	1-0	8"	4½"	3"
# 7	5¼"	1-2	9"	5¼"	3½"
# 8	6"	1-4	10½"	6"	4"

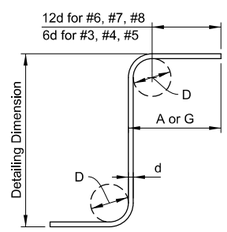

90° HOOK

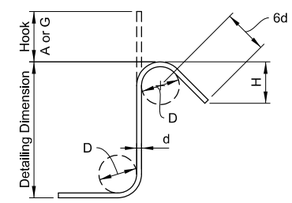

135° HOOK

135° SEISMIC STIRRUP / TIE HOOK				
BAR SIZE	D	135° HOOKS		OUTSIDE RADIUS
		A or G	H (approx)	
# 3	1½"	4¼"	3"	1⅛"
# 4	2"	4½"	3"	1½"
# 5	2½"	5½"	3¾"	1⅞"
# 6	4½"	8"	4½"	3"
# 7	5¼"	9"	5¼"	3½"
# 8	6"	10½"	6"	4"

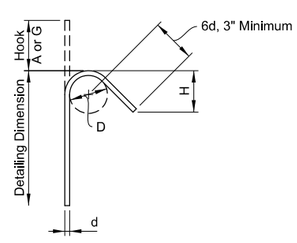

135° HOOK

REVISED 5/1/17

REBAR BENDS SHEET

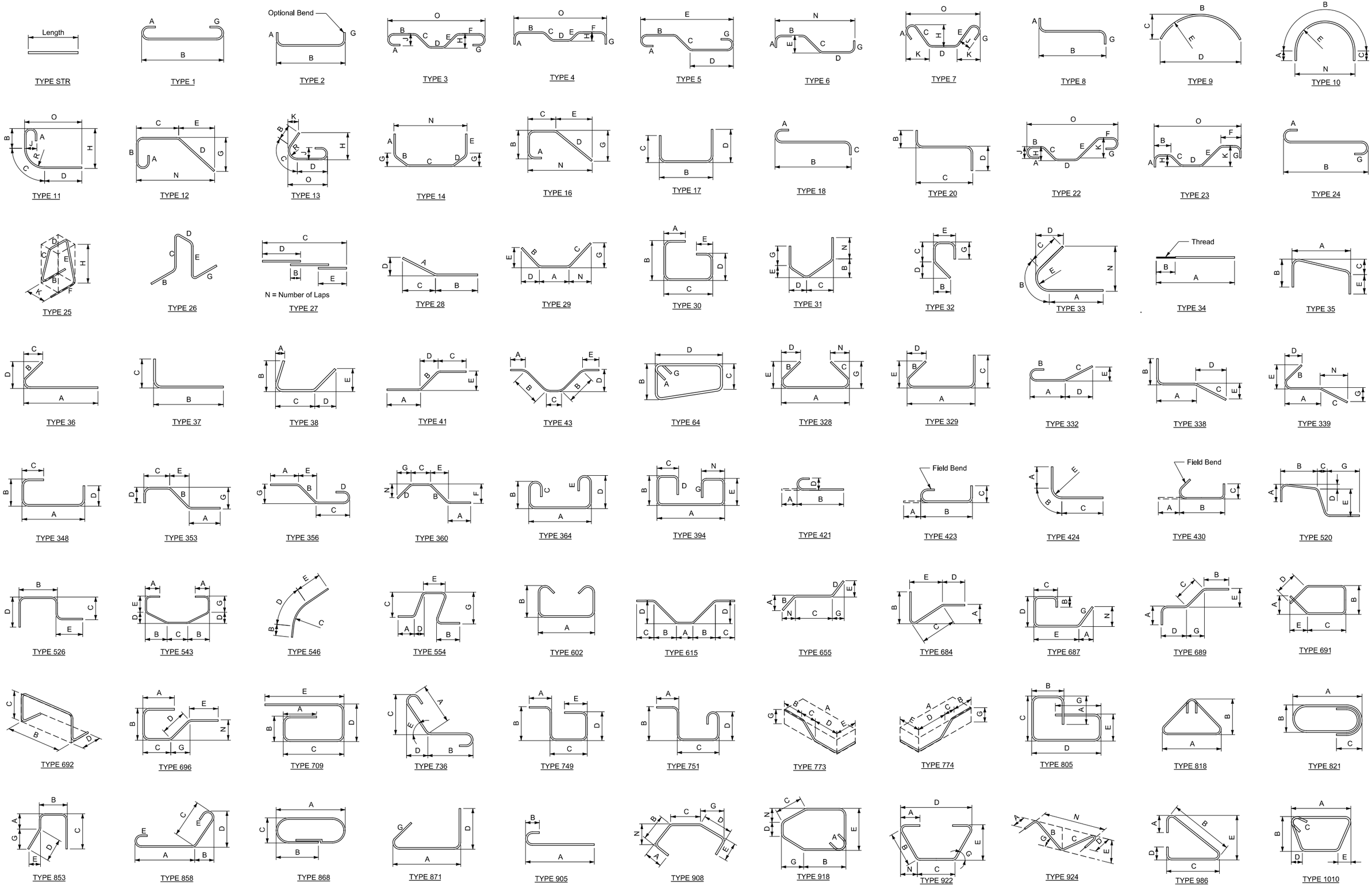

REVISED 5/1/17

REBAR SHEET - 1

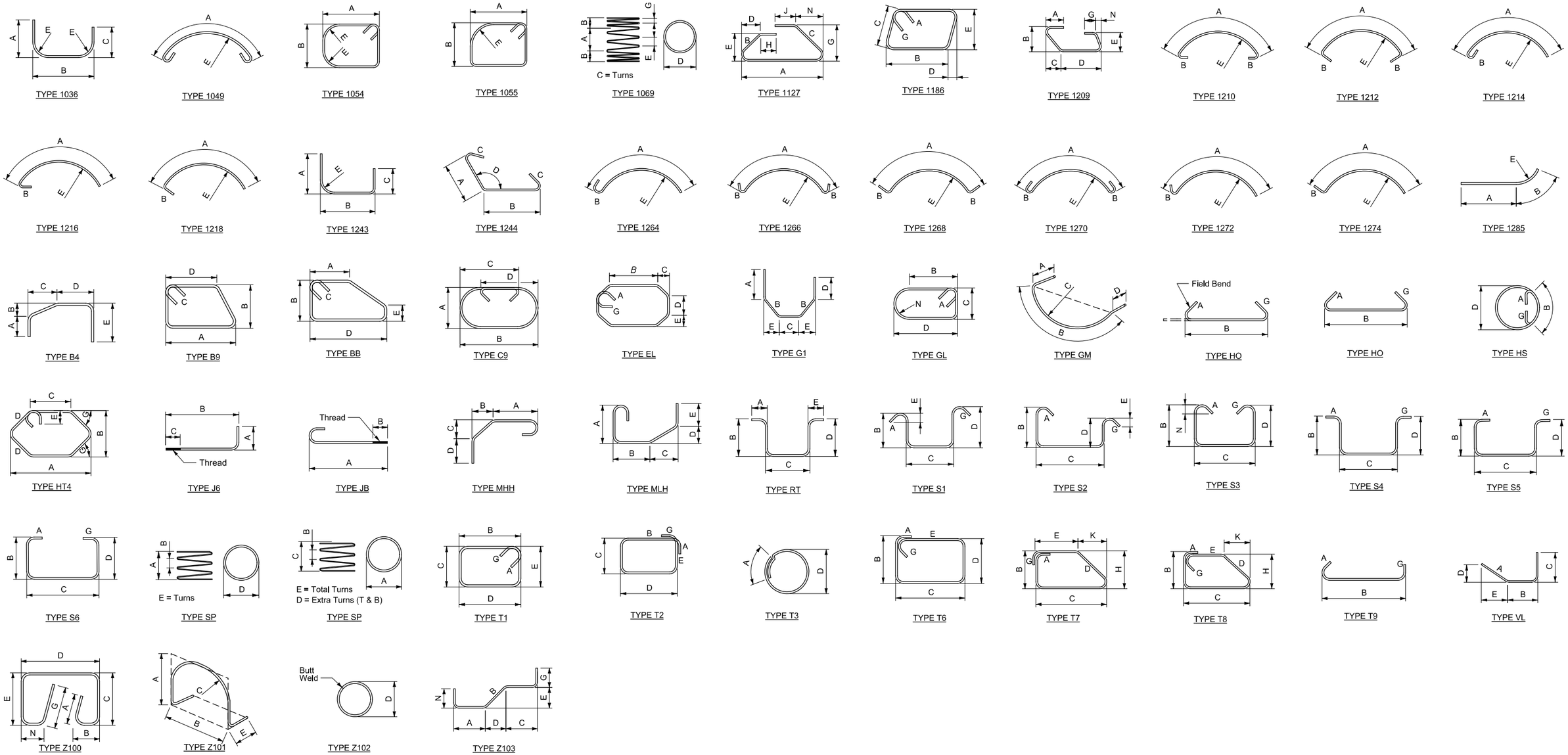

REVISED 5/1/17

REBAR SHEET - 2

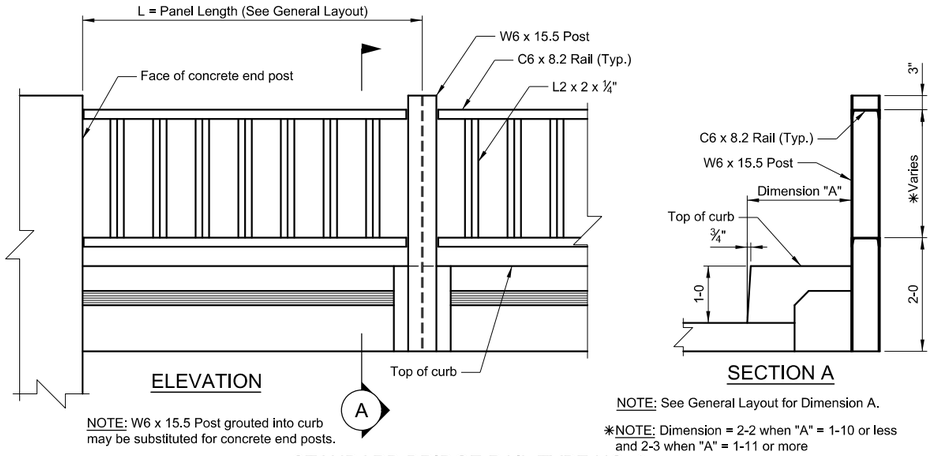

NOTE: W6 x 15.5 Post grouted into curb may be substituted for concrete end posts.

NOTE: See General Layout for Dimension A.

✱NOTE: Dimension = 2-2 when "A" = 1-10 or less and 2-3 when "A" = 1-11 or more

STANDARD BRIDGE RAIL TYPE NO. 3

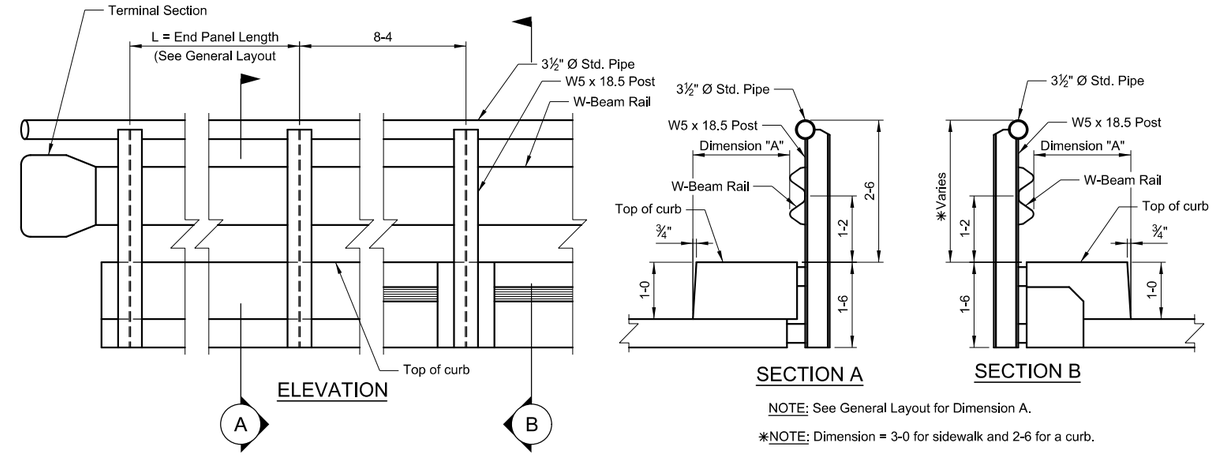

NOTE: Curb may be built as shown in Section A or Section B.

NOTE: See General Layout for Dimension A.

✱NOTE: Dimension = 3-0 for sidewalk and 2-6 for a curb.

STANDARD BRIDGE RAIL TYPE NO. 4

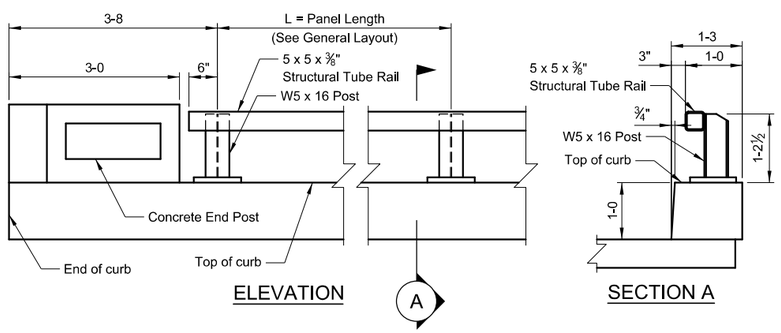

STANDARD BRIDGE RAIL TYPE NO. 5

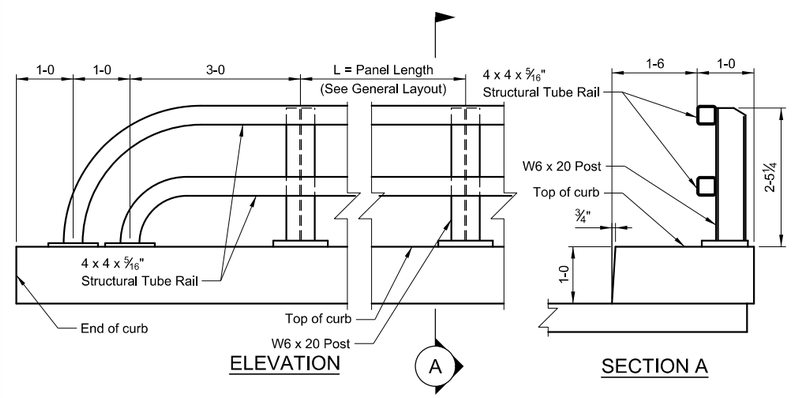

STANDARD BRIDGE RAIL TYPE NO. 6

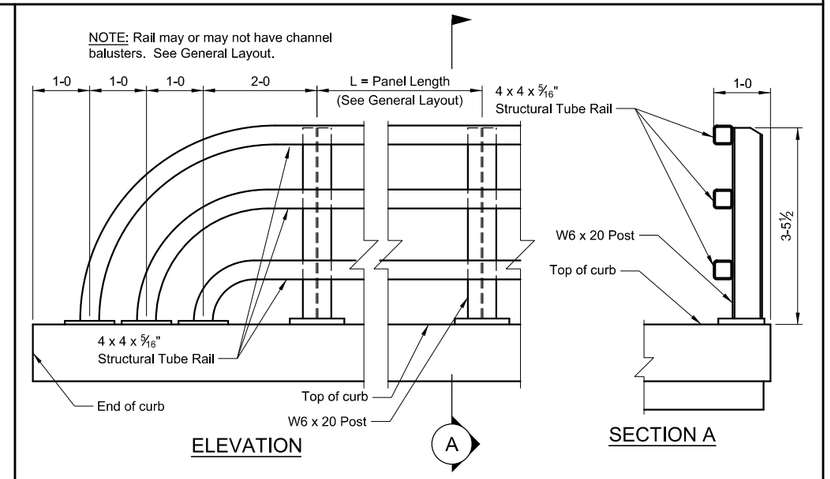

STANDARD BRIDGE RAIL TYPE NO. 7

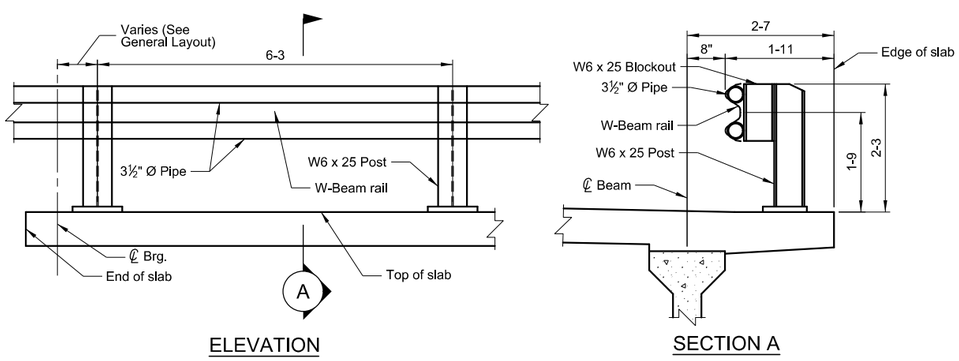

STANDARD BRIDGE RAIL TYPE NO. 8

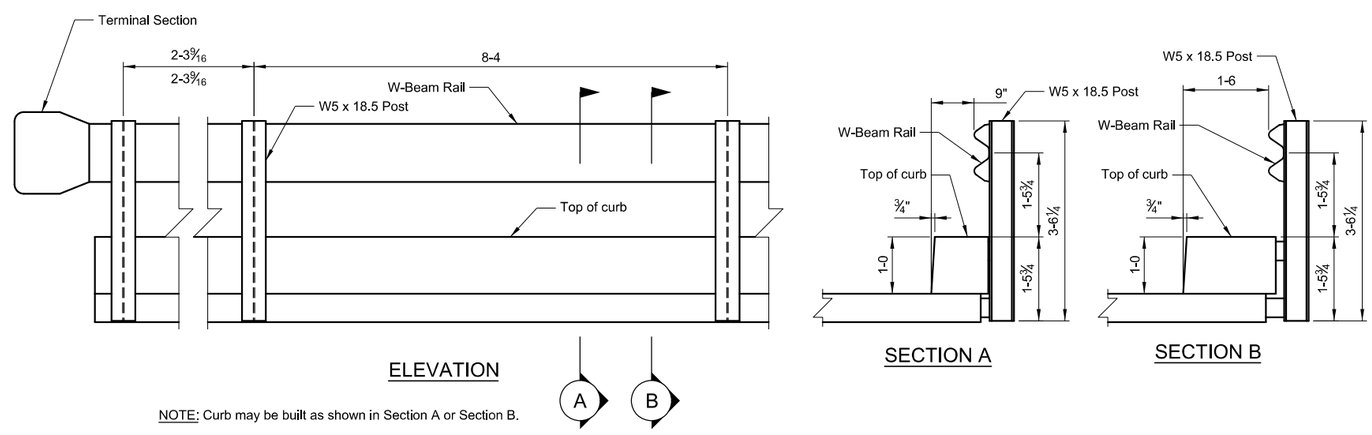

NOTE: Curb may be built as shown in Section A or Section B.

STEEL BEAM BRIDGE RAIL

REVISED 5/1/17

SCALE: ¾" = 1'-0"

OLD RAIL SHAPES

ASSOCIATED PROJECT AGREEMENT NUMBERS	
P. E.	XXXX

MONTANA DEPARTMENT OF TRANSPORTATION

BRIDGE PLANS AND QUANTITIES
FEDERAL AID PROJECT XXXXXX
XXXXX PROJECT
XXXX COUNTY

LIST OF DRAWINGS

SHEET NO.	DWG. NO.	TITLE
BRIDGE DRAWINGS		
B1	XXXXX	LIST OF DRAWINGS AND ESTIMATED BRIDGE PLAN QUANTITIES
B2	XXXXX	GENERAL LAYOUT AT STA. XX+XX.XX
B3	XXXXX	XXXXXXX

DWG. NO.	TITLE
STANDARD DRAWINGS	
MTS (REVISED 5-20-14)	STANDARD PRESTRESSED CONCRETE BEAM TYPE MTS
SL-8 (REVISED 5-20-14)	STANDARD SLAB AND DIAPHRAGM DETAILS

SHEET NO.
B1

LIST OF DRAWINGS AND ESTIMATED BRIDGE PLAN QUANTITIES

PRELIMINARY

MONTANA DEPARTMENT OF TRANSPORTATION

BRIDGE BUREAU

REVISED		
REVISED		
REVISED		
REVISED		
CHECKED	XX-XX-XX	X.X.X.
DRAWN	XX-XX-XX	X.X.X.
DESIGNED	XX-XX-XX	X.X.X.
$DATE$	$TIME$	$FILEABBREV$

UPN NUMBER
XXXXXXX

MDT STRUCTURE
XXXXX

DRAWING NO.
XXXXX

ASSOCIATED PROJECT AGREEMENT NUMBERS	
P. E.	XXXX

MONTANA DEPARTMENT OF TRANSPORTATION

BRIDGE PLANS AND QUANTITIES
FEDERAL AID PROJECT XXXXXX
XXXXX PROJECT
XXXX COUNTY

BY _____

DATE _____

SHEET NO. B1

LIST OF DRAWINGS AND ESTIMATED BRIDGE PLAN QUANTITIES

PRELIMINARY

LIST OF DRAWINGS

SHEET NO.	DWG. NO.	TITLE
BRIDGE DRAWINGS		
B1	XXXXX	LIST OF DRAWINGS AND ESTIMATED BRIDGE PLAN QUANTITIES
B2	XXXXX	GENERAL LAYOUT AT STA. XX+XX.XX
B3	XXXXX	XXXXXXX

DWG. NO.	TITLE
STANDARD DRAWINGS	
MTS (REVISED 5-20-14)	STANDARD PRESTRESSED CONCRETE BEAM TYPE MTS
SL-8 (REVISED 5-20-14)	STANDARD SLAB AND DIAPHRAGM DETAILS

MONTANA DEPARTMENT OF TRANSPORTATION

BRIDGE BUREAU

REVISED		
REVISED		
REVISED		
REVISED		
CHECKED	XX-XX-XX	X.X.X.
DRAWN	XX-XX-XX	X.X.X.
DESIGNED	XX-XX-XX	X.X.X.
$DATE$	$TIME$	$FILEABBREV$

UPN NUMBER XXXXXXX

MDT STRUCTURE XXXXXXXXXXXXXX

DRAWING NO. XXXXX

REVISED			
REVISED			
REVISED			
REVISED			
CHECKED	XX-XX-XX	X.X.X.	
DRAWN	XX-XX-XX	X.X.X.	
DESIGNED	XX-XX-XX	X.X.X.	

$DATE$ $TIME$ $FILEABBREV$

MDT
MONTANA DEPARTMENT OF TRANSPORTATION
BRIDGE BUREAU

FEDERAL AID PROJECT NO.
XXXXXXXXXXXXXXXXXXXXXXX

XXXXXXXXXX COUNTY

BRIDGE OVER

AT STA. XXXX+XX.XX

ROUTE
XXXXXXX

REFERENCE POINT
XXX + X.XXX

SHEET DESCRIPTION

SCALE: Scale

SHEET NO.
BXX

DRAWING NO.
XXXXX

MDT STRUCTURE
XXXXX

UPN NUMBER
XXXXXXX

PRELIMINARY

SAMPLE DRAWINGS

Q – SHEET

GENERAL LAYOUT

FOOTING PLAN

END BENT

END BENT DETAILS

INTERMEDIATE BENT

ERECTION PLAN

SLAB DETAILS

ASSOCIATED PROJECT AGREEMENT NUMBERS	
P. E.	STPB 209-1(8)4

MONTANA DEPARTMENT OF TRANSPORTATION

BRIDGE PLANS AND QUANTITIES
FEDERAL AID PROJECT STPB 209-1(9)4
SWAN RIVER 5 M E BIGFORK
FLATHEAD & LAKE COUNTIES

LIST OF DRAWINGS

SHEET NO.	DWG. NO.	TITLE
BRIDGE DRAWINGS		
B1	XXXXX	LIST OF DRAWINGS AND ESTIMATED BRIDGE PLAN QUANTITIES
B2	XXXXX	GENERAL LAYOUT AT STA. XX+XX.XX
B3	XXXXX	FOOTING PLAN
B4	XXXXX	BENT NO. 1 AND NO. 3
B5	XXXXX	BENT NO. 1 AND NO. 3 DETAILS
B6	XXXXX	PIER NO. 2
B7	XXXXX	ERECTION PLAN
B8	XXXXX	SLAB DETAILS

DWG. NO.	TITLE
STANDARD DRAWINGS	
PSD (APPROVED 1-30-15)	STANDARD PILE SPLICE DETAILS AND PILE TIPS
MTS (REVISED 5-20-14)	STANDARD PRESTRESSED CONCRETE BEAM TYPE MTS
SL-8 (REVISED 3-15-17)	STANDARD SLAB AND DIAPHRAGM DETAILS

ESTIMATED BRIDGE PLAN QUANTITIES

BRIDGE I.D. NUMBER 06381 LOCATION	LENGTH (FT)	PRESTRESSED BEAMS TYPE MTS-54 (FT)	TRANSVERSE DECK GROOVING (YD^2)	CONCRETE CLASS - DECK (YD^3)	CONCRETE CLASS - STRUCTURE (YD^3)	REINFORCING STEEL		16" X 1/2" WALL THICKNESS STEEL PIPE PILES		CONICAL DRIVING POINT (EACH)	DYNAMIC LOAD TEST (EACH)	BRIDGE RAIL W830 (FT)
						REGULAR (LB)	EPOXY (LB)	FURNISH (FT)	DRIVE (FT)			
BENT NO. 1					37.6	3049	434	179.6	171.3	5	1	
PIER NO. 2					17.3	2068		220.9	133.3	5	1	
BENT NO. 3					37.6	3049	434	183.1	178.8	5	1	
SUPERSTRUCTURE	247.50	1230.0	1047	345.1			61411					504.88
TOTAL	247.50	1230.0	1047	345.1	92.5	8166	62279	583.6	483.4	15	3	504.88

SHEET NO. B1

LIST OF DRAWINGS & ESTIMATED BRIDGE PLAN QUANTITIES

PRELIMINARY

MDT MONTANA DEPARTMENT OF TRANSPORTATION

BRIDGE BUREAU

REVISED		
REVISED		
REVISED		
REVISED		
CHECKED		
DRAWN	5-1-17	T.J.B.
DESIGNED		
$DATE$	$TIME$	$FILEABBREV$

UPN NUMBER 6848000

MDT STRUCTURE 06381

DRAWING NO. XXXXX

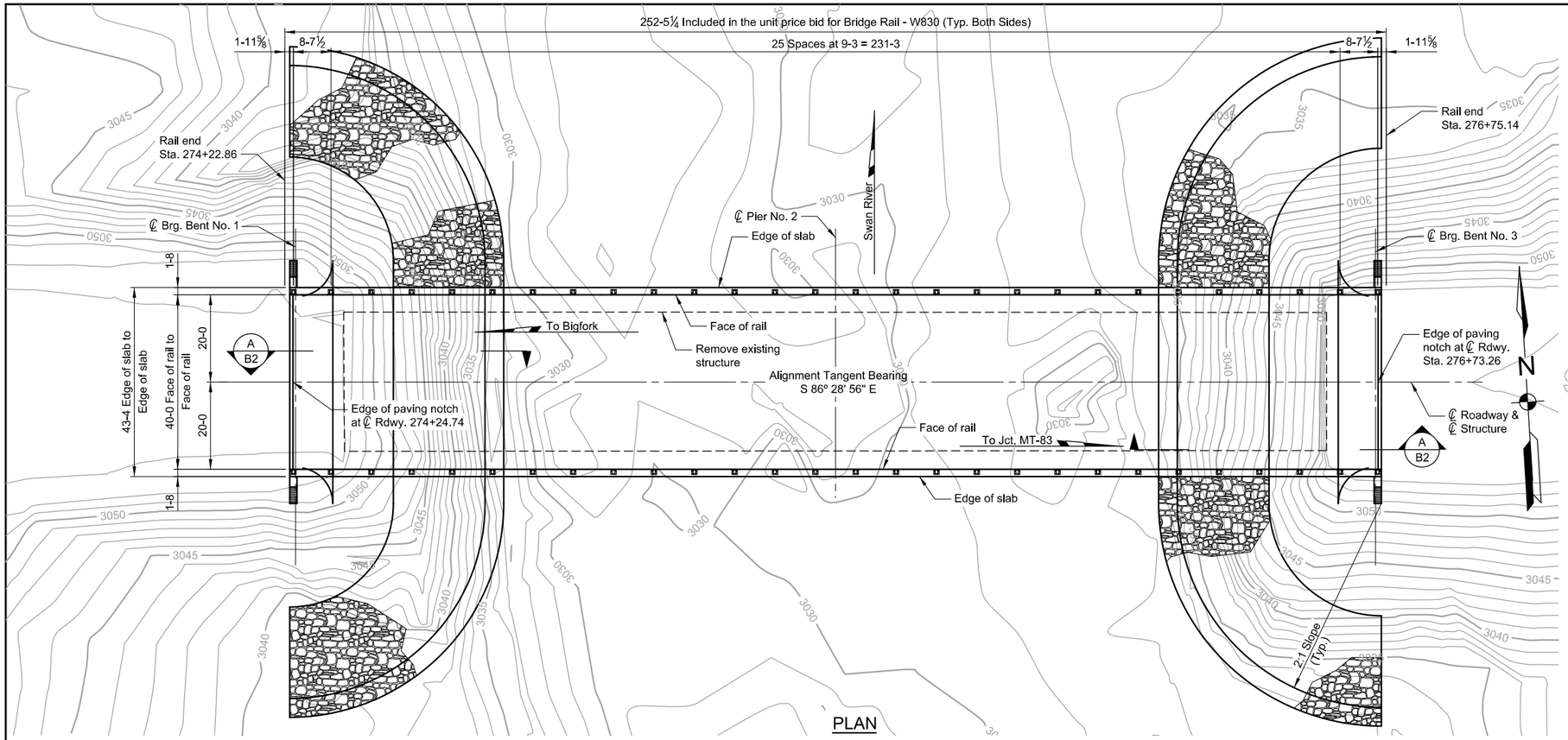

PLAN

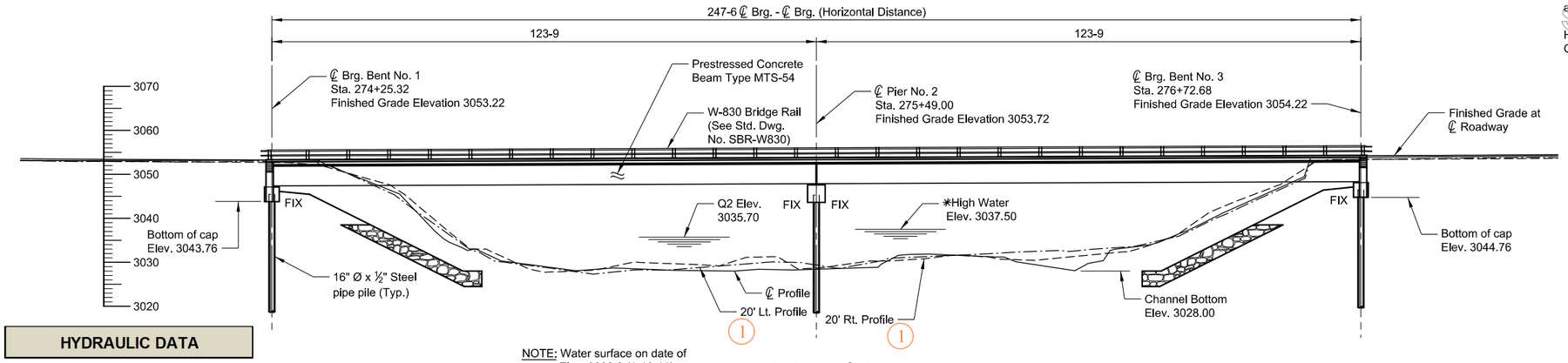

NOTE: Water surface on date of survey Elev. 3032.8 (1-10-11)

ELEVATION

HYDRAULIC DATA

Drift:	Light
Ice:	Light
Low Scour Elevation (Q100):	3028.00
Drainage Area:	671 sq. mi.
Q2 Elevation:	3035.7
Q50 Elevation:	3037.28
* Q100 Flow:	9000 cfs
Q100 Elevation	3037.5
Q100 Velocity	6.9 fps
Actual Low Beam Elevation:	3047.33
Allowable Low Beam Elevation:	3039.5

Also see Hydraulic Data Summary sheet.

* Q100 Elevation includes backwater.

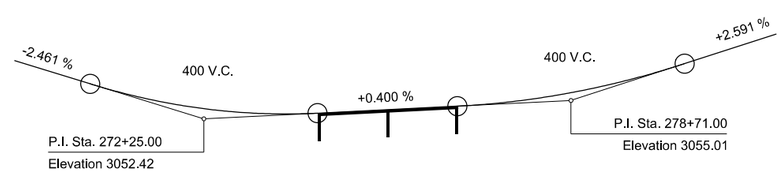

PROFILE GRADE

No Scale

NOTES

FINISHED GRADE: Finished grade of bridge at centerline roadway is the same as the Profile Grade shown on Road Plans.

LIVE LOAD: Standard HL-93 loading.

SPECIFICATIONS: Montana Department of Transportation and the Montana Transportation Commission Standard Specifications for Road and Bridge Construction, 2006 edition, and any amendments thereto, and the Special Provisions govern unless otherwise noted. The design was prepared in accordance with AASHTO LRFD Bridge Design Specifications, Seventh edition - 2014 with 2016 Interim revisions.

REINFORCING STEEL: Use new deformed type reinforcing steel meeting the requirements of AASHTO M 31 Grade 60. Include all costs associated with furnishing and placing new reinforcing steel in the unit price bid for either Reinforcing Steel or Reinforcing Steel - Epoxy Coated.

REINFORCING STEEL SUFFIX: The suffix E denotes epoxy coated reinforcing steel.

REINFORCING STEEL COVER: Unless specified otherwise on the drawings, the minimum concrete cover measured from the face of the concrete to the face of any reinforcing steel is 2" except as noted below:

Bottom of slab	1"
Top of slab	2½"
Bottom of abutment caps	3"
Concrete Barriers	1½"

Concrete cover to any tie bar is ½" less than what is listed above.

CAST IN PLACE CONCRETE: Unless otherwise approved or specified, use Concrete Class Structure for all substructure concrete and Concrete Class Deck for all superstructure concrete.

CONCRETE STRENGTH: Use f'c = 4000 p.s.i. for Concrete Class Structure. Use f'c = 4000 p.s.i. for Concrete Class Deck.

STRUCTURE EXCAVATION: Include structure excavation in the unit price bid for Concrete Class Structure.

TRAFFIC CONTROL PLAN AND SEQUENCE OF OPERATIONS: See Special Provisions.

EXISTING STRUCTURE: Remove the existing structure (see Road Plans sheets and Special Provisions).

STATE PLANE COORDINATES: Stations shown on the bridge plans are state plane grid stations based on (NAD83-1992). Dimensions shown on the bridge plans are horizontal ground distances and not state plane grid distances. The combination scale factor (CSF) at this locations is 0.99941396.

Horizontal ground distance x CSF = Grid Distance
Grid Distance/CSF = Distance to stake.

APPLICABLE FOOTNOTES

1

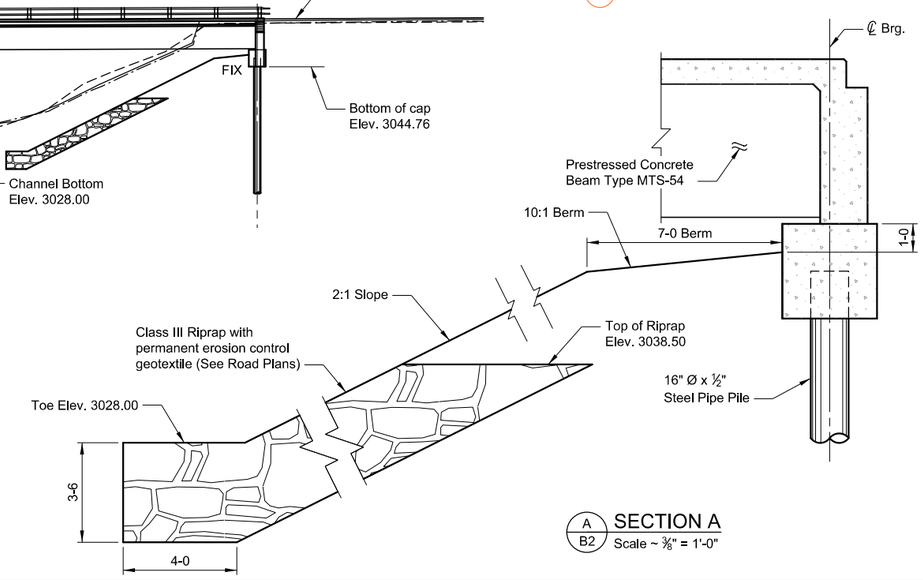

A B2 SECTION A
Scale ~ ⅜" = 1'-0"

SHEET NO. B2

GENERAL LAYOUT

SCALE: 1" = 15'-0" Except As Noted

BRIDGE OVER SWAN RIVER

AT STA. 275+49.00

REFERENCE POINT 4 + 0.488

ROUTE S-209

FEDERAL AID PROJECT NO. STPB 209-1(9)4

FLATHEAD & LAKE COUNTIES

PRELIMINARY

STANDARD - 3/17

MDT MONTANA DEPARTMENT OF TRANSPORTATION BRIDGE BUREAU

REVISED		
REVISED		
REVISED		
REVISED		
CHECKED		
DRAWN	5-1-17	T.J.B.
DESIGNED		
SDATES	STIMES	$FILEABBREV$

UPN NUMBER 6848000

MDT STRUCTURE 06381

DRAWING NO. XXXXX

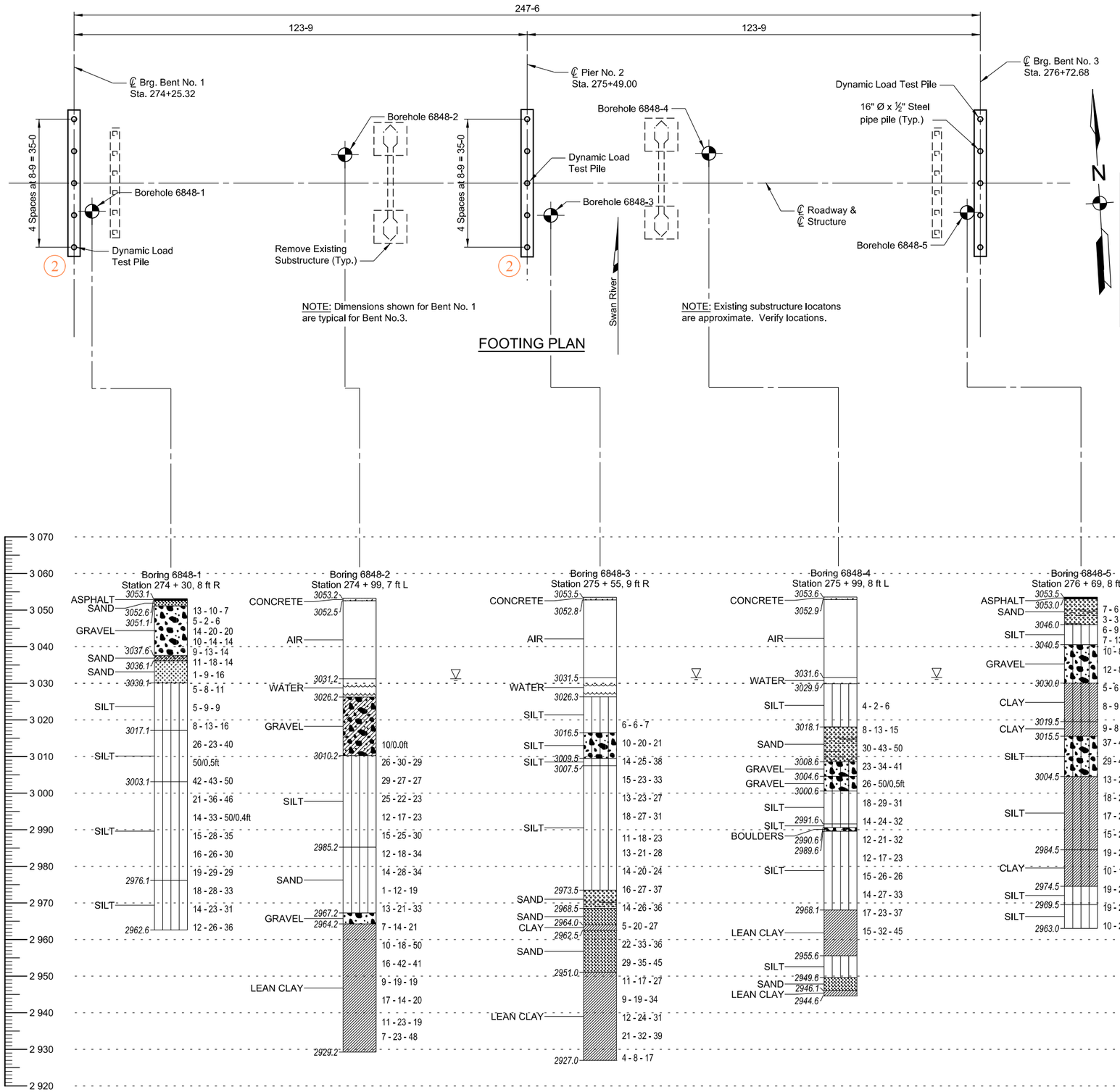

SUMMARY OF LOG OF BORINGS

COORDINATE TABLE

LOCATION	N OR Y COORDINATE	E OR X COORDINATE	DESCRIPTION
BENT NO. 1	1417298.266	873127.088	CL BRG. AT CL ROADWAY
PIER NO. 2	1417290.678	873250.532	CL PIER AT CL ROADWAY
BENT NO. 3	1417283.089	873373.977	CL BRG. AT CL ROADWAY

PILE INFORMATION

LOCATION	DESIGN PILE TIP ELEVATION	MAXIMUM PILE CUT-OFF ELEVATION (FT)	PILE TIP TREATMENT	REQUIRED BEARING RESISTANCE DURING DRIVING (KIP)	MAXIMUM PILE REACTION UNDER SERVICE I
BENT NO. 1	3009.50	3045.43.	CONICAL	300	260
PIER NO. 2	3001.75	3045.93	CONICAL	510	480
BENT NO. 3	3009.00	3046.43	CONICAL	300	260

NOTES

SOILS AND FOUNDATION MATERIALS: The Footing Plan shows points where the State of Montana, Department of Transportation, drilled boreholes.

The series of numbers on the Log of Borings shows the number of blows from a 140 pound hammer with a 30" drop required to drive a 2" split spoon sampler 6" (Standard Penetration Test). The length of the split spoon sampler is 18". The sampler length is measured as three 6" intervals. If the split spoon sampler did not penetrate 6" after 50 blows, the Log of Borings shows the measured penetration within that particular interval.

See the Special Provisions for original boring logs and additional subsurface information.

NOTE: Contact the MDT Geotechnical Section at (406)444-6281 if pile tip elevations deviate more than 1 foot from the elevation indicated

NOTE: If the project manager requires a re-drive of the test pile, re-drive the pile not less than 24 hours or more than 48 hours after initial driving.

APPLICABLE FOOTNOTES
2

SHEET NO.
B3

FOOTING PLAN

SCALE: 1" = 15'-0"

BRIDGE OVER SWAN RIVER
AT STA. 275+49.00

REFERENCE POINT
4 + 0.488

ROUTE
S-209

FEDERAL AID PROJECT NO.
STPB 209-1(9)4

FLATHEAD & LAKE COUNTIES

PRELIMINARY

MONTANA DEPARTMENT OF TRANSPORTATION
BRIDGE BUREAU

SDATES	STIMES	$FILEABBREV$
DESIGNED		
DRAWN	5-1-17	T.J.B.
CHECKED		
REVISED		
REVISED		
REVISED		
REVISED		

UPN NUMBER
6848000

MDT STRUCTURE
06381

DRAWING NO.
XXXXX

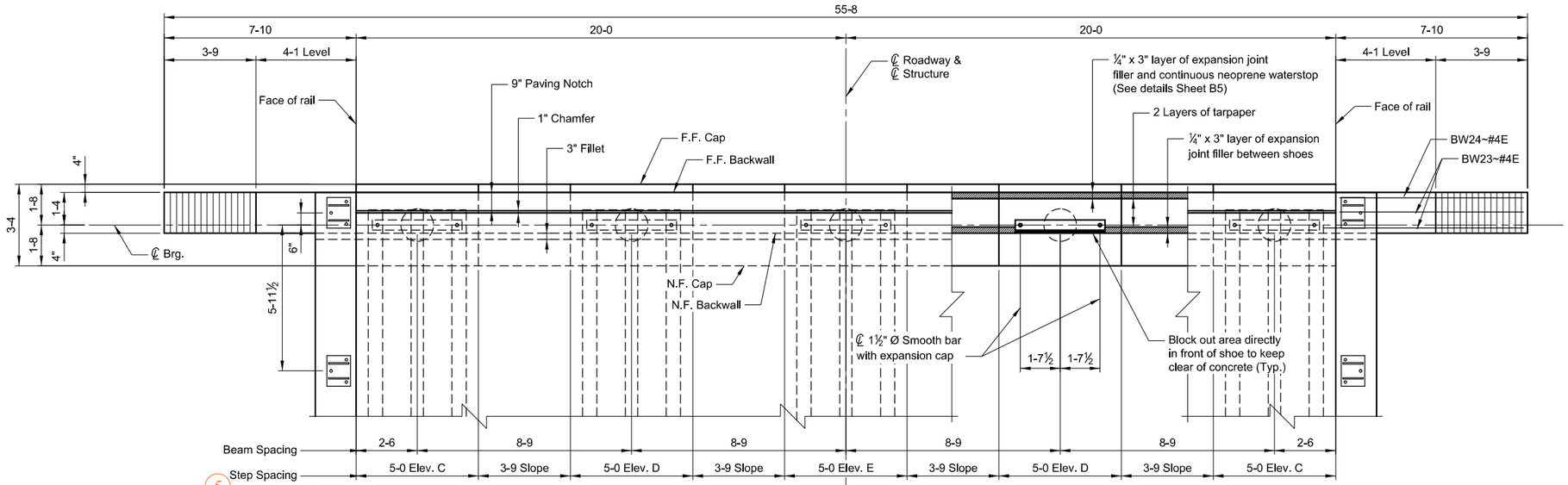

5

PLAN

NOTE: Include all costs associated with furnishing and placing the expansion joint filler, tarpaper and neoprene waterstop in the unit price bid for Concrete Class Structure.

NOTE: Securely nail expansion joint filler to pile cap concrete and hold in proper position while placing backwall concrete.

NOTE: N.F. denotes near face.
F.F. denotes fill face.

NOTE: Lap #4 bars 2-0 minimum.
Lap #5 bars 2-6 minimum.
Lap #6 bars 3-0 minimum.
Lap #5E bars 3-0 minimum.

NOTE: Slab and beam reinforcing steel is omitted for clarity. See Std. Dwg. No. SL-8, Std. Dwg. No. MST, and Sheet B8 for details.

NOTE: Finish beam seats level to the elevations shown on this drawing. Slope areas between beam seats as shown.

NOTE: Ensure reinforcing steel does not interfere with anchor bolt placement.

NOTE: See Sheet B5 for bill of reinforcing steel

8

TABLE OF ELEVATIONS

ELEVATION	BENT NO. 1	BENT NO. 3
A	3053.22	3054.22
B	3052.82	3053.82
C	3047.09	3048.09
D	3047.27	3048.27
E	3047.44	3048.44
F	3043.76	3044.76

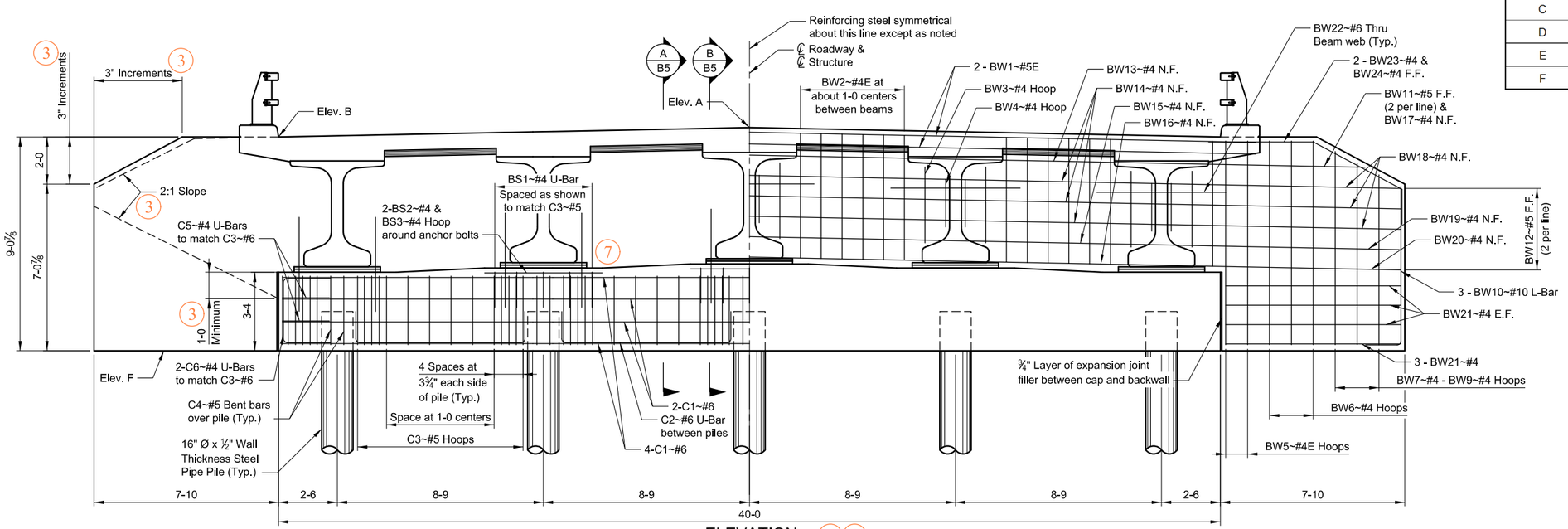

ELEVATION 6 9

Bent No. 1 Looking Back On Line
Bent No. 3 Looking Ahead On Line

APPLICABLE FOOTNOTES

3 5 6 7 8 9

SHEET NO. B4

BENT NO. 1 & NO. 3

SCALE: ⅜" = 1'-0"

BRIDGE OVER SWAN RIVER

AT STA. 275+49.00

REFERENCE POINT 4 + 0.488

ROUTE S-209

FEDERAL AID PROJECT NO. STPB 209-1(9)4

FLATHEAD & LAKE COUNTIES

MONTANA DEPARTMENT OF TRANSPORTATION

BRIDGE BUREAU

REVISED
REVISED
REVISED
REVISED
CHECKED
DRAWN 5-1-17 T.J.B.
DESIGNED
SDATES STIMES $FILEABBREVS

UPN NUMBER 6848000

MDT STRUCTURE 06381

DRAWING NO. XXXXX

PRELIMINARY
STANDARD - 3/17

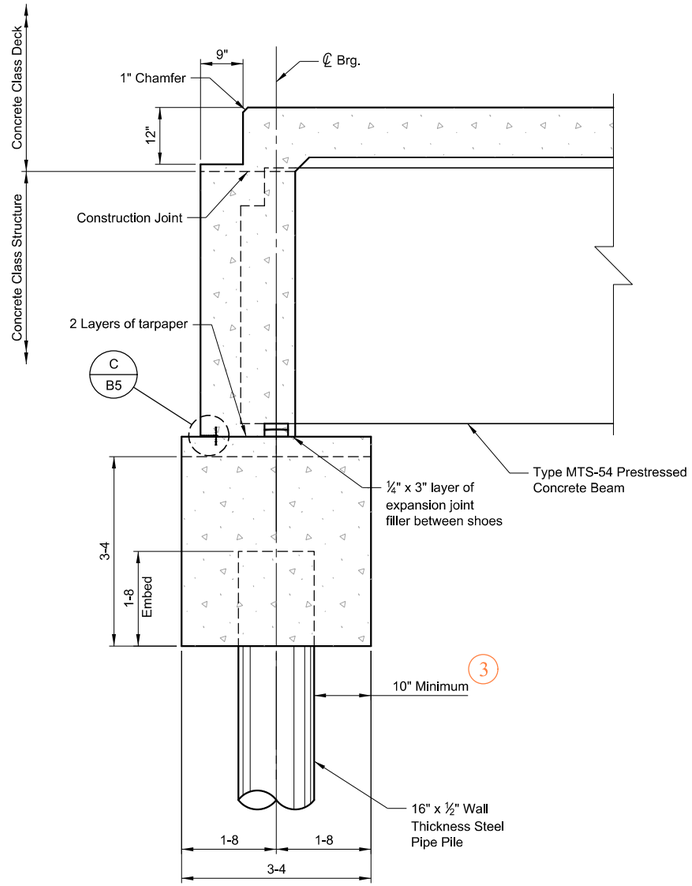

A / B4 SECTION A 7
Scale ~ ¾" = 1'-0"

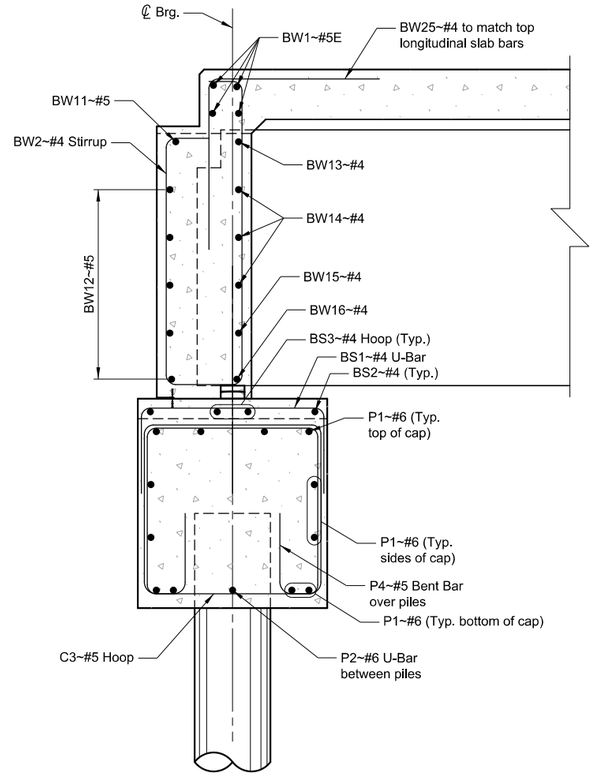

B / B4 SECTION B 7 9
Scale ~ ¾" = 1'-0"

BILL OF REINFORCING STEEL

FOR ONE BENT ONLY
(ALL DIMENSIONS ARE OUT TO OUT)

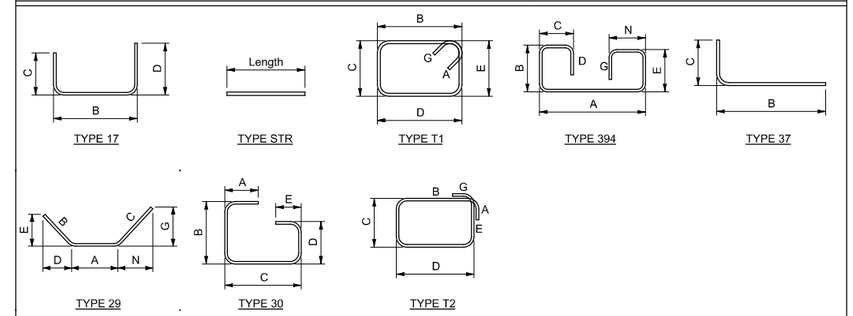

Mark	Size	No.	Type	Length	A	B	C	D	E	G	N
C1	#6	12	STR	39-8							
C2	#6	4	17	9-11		7-1	1-5	1-5			
C3	#5	68	T1	12-9	5½"	3-0	2-11	3-0	2-11	5½"	
C4	#5	10	394	12-8	3-0	2-11	6"	1-5	2-11	1-5	6"
C5	#4	8	17	6-10½		2-10½	2-0	2-0			
C6	#4	4	17	6-9½		2-9½	2-0	2-0			
BW1	#5E	4	STR	39-8							
BW2	#4E	26	30	12-3½	7"	5-3½	1-4	4-4	9"		
BW3	#4	10	T1	9-10	4½"	1-4	3-2½	1-4	3-2½	4½"	
BW4	#4	10	T1	7-5	4½"	1-4	2-0	1-4	2-0	4½"	
BW5	#4E	4	T1	20-8	4½"	1-4	8-7½	1-4	8-7½	4½"	
BW6	#4	6	T1	20-8	4½"	1-4	8-7½	1-4	8-7½	4½"	
BW7	#4	2	T1	19-10	4½"	1-4	8-2½	1-4	8-2½	4½"	
BW8	#4	2	T1	18-10	4½"	1-4	7-8½	1-4	7-8½	4½"	
BW9	#4	2	T1	17-10	4½"	1-4	7-2½	1-4	7-2½	4½"	
BW10	#4	6	37	8-2		1-6	6-8				
BW11	#5	2	STR	26-1½							
BW12	#5	10	STR	27-8							
BW13	#4	4	STR	4-5							
BW14	#4	12	STR	7-11							
BW15	#4	4	STR	7-2½							
BW16	#4	4	STR	5-7							
BW17	#4	2	STR	6-5½							
BW18	#4	6	STR	9-9							
BW19	#4	2	STR	9-4½							
BW20	#4	2	STR	8-7							
BW21	#4	18	STR	7-7							
BW22	#6	5	STR	6-0							
BW23	#4	4	29	10-2	4-3	1-6	4-5	8½"	1-4	2-1	3-11
BW24	#4	2	29	9-6	4-3	1-6	3-9	8½"	1-4	1-9	3-4
BW25	#4	44	17	6-0		3-0	3-0				
BS1	#4	15	17	6-0		3-0	1-6	1-6			
BS2	#4	6	STR	5-0							
BS2	#4	6	T2	10-1	4½"	4-0	8"	4-0	8"	4½"	

4

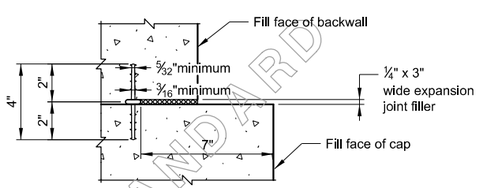

C / B5 WATERSTOP DETAIL
No Scale
NOTE: Hold waterstop in accurate position while placing concrete.

APPLICABLE FOOTNOTES
3 4 7 9

NOTE: See Sheet B4 for additional notes and detail

SHEET NO. B5

BENT NO. 1 AND NO. 3 DETAILS

SCALE: As Noted

BRIDGE OVER SWAN RIVER
AT STA. 275+49.00

REFERENCE POINT 4 + 0.488

ROUTE S-209

FEDERAL AID PROJECT NO.
STPB 209-1(9)4

FLATHEAD & LAKE COUNTIES

PRELIMINARY

MDT MONTANA DEPARTMENT OF TRANSPORTATION
BRIDGE BUREAU

REVISED		
REVISED		
REVISED		
REVISED		
CHECKED		
DRAWN	T.J.B.	
DESIGNED	5-1-17	
SDATES	STIMES	$FILEABBREV$

UPN NUMBER
6848000

MDT STRUCTURE
06381

DRAWING NO.
XXXXX

STANDARD

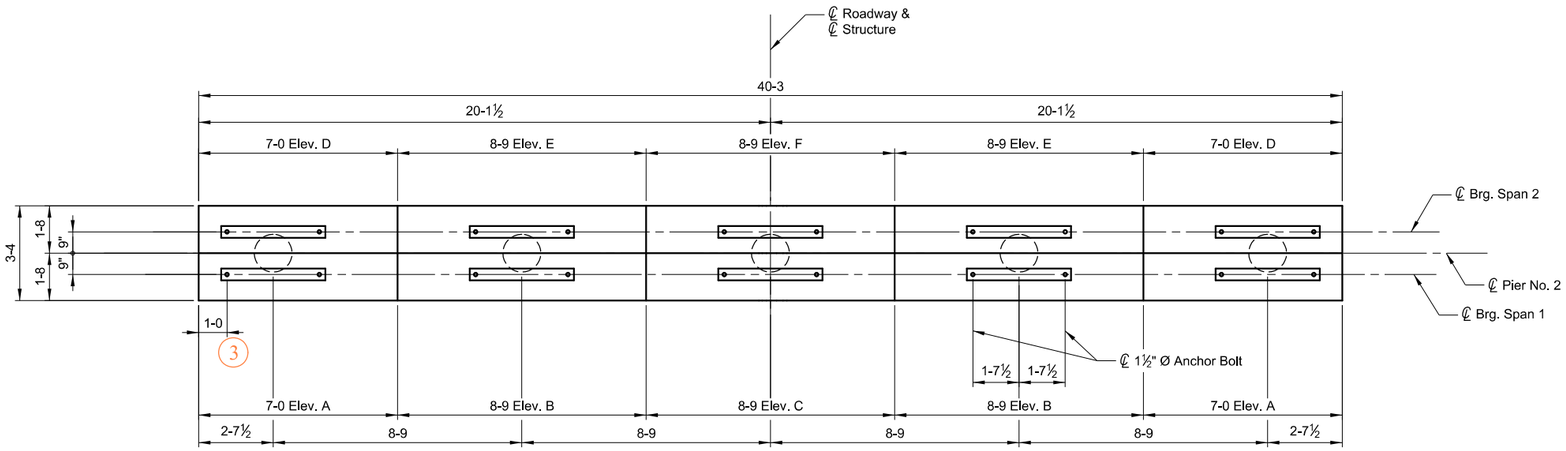

PLAN

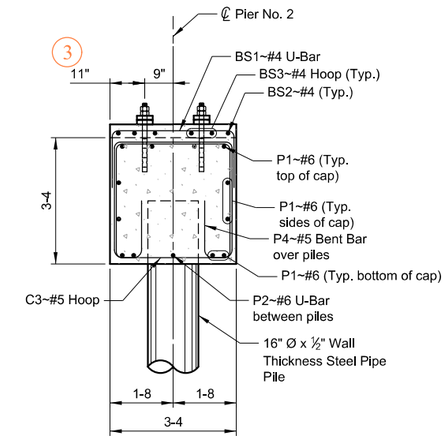

A / B6 SECTION A 7 9
Scale ~ ½" = 1'-0"

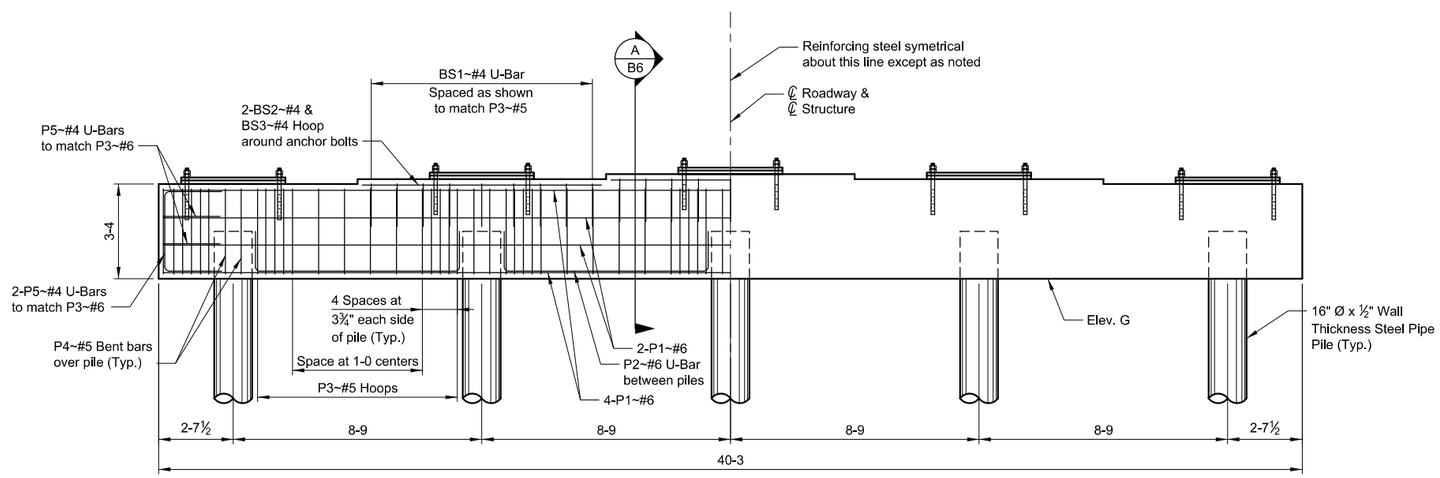

ELEVATION 7 9

8

TABLE OF ELEVATIONS	
ELEVATION	PIER NO. 2
A	3047.59
B	3047.77
C	3047.94
D	3047.6
E	3047.77
F	3047.95
G	3044.26

APPLICABLE FOOTNOTES
3 4 7 8 9

NOTE: Lap #4 bars 2-0 minimum.
Lap #5 bars 2-6 minimum.
Lap #6 bars 3-0 minimum.
Lap #5E bars 3-0 minimum.

NOTE: Ensure reinforcing steel does not interfere with anchor bolt placement.

STANDARD - 3/17
STANDARD - 3/17

BILL OF REINFORCING STEEL (ALL DIMENSIONS ARE OUT TO OUT)

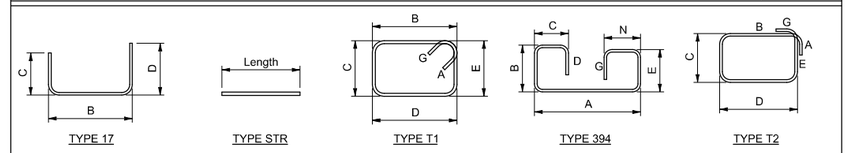

Mark	Size	No.	Type	Length	A	B	C	D	E	G	N
P1	#6	12	STR	39-11							
P2	#6	4	17	9-11		7-1	1-5	1-5			
P3	#5	68	T1	12-11	5½"	3-0	3-0	3-0	3-0	5½"	
P4	#5	10	394	13-0	3-0	3-0	6"	1-6	3-0	1-6	6"
P5	#4	12	17	6-10½		2-10½	2-0	2-0			
BS1	#4	27	17	6-0		3-0	1-6	1-6			
BS2	#4	6	STR	8-5							
BS2	#4	6	T2	10-1	4½"	4-0	8"	4-0	8"	4½"	

4

SHEET NO. B6

PIER NO. 2

BRIDGE OVER SWAN RIVER
AT STA. 275+49.00

ROUTE S-209

REFERENCE POINT 4 + 0.488

SCALE: ⅜" = 1'-0"

FEDERAL AID PROJECT NO.
STPB 209-1(9)4

FLATHEAD & LAKE COUNTIES

PRELIMINARY

MDT MONTANA DEPARTMENT OF TRANSPORTATION
BRIDGE BUREAU

REVISED
REVISED
REVISED
REVISED
CHECKED
DRAWN 5-1-17 T.J.B.
DESIGNED
$DATES $TIMES $FILEABBREV$

UPN NUMBER 6848000

MDT STRUCTURE 06381

DRAWING NO. XXXXX

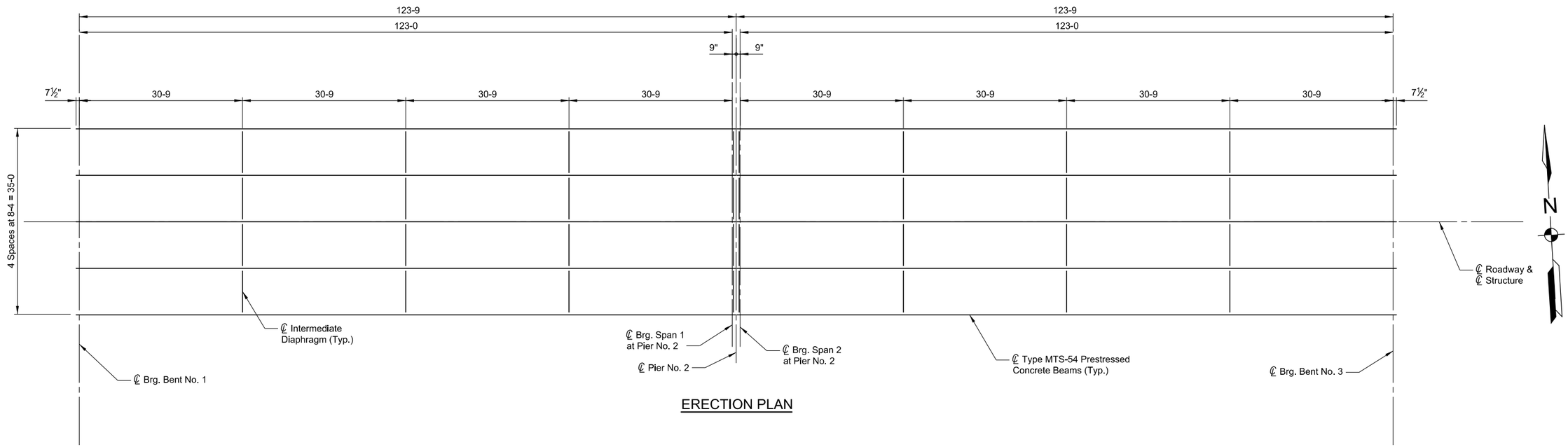

ERECTION PLAN

PRESTRESSED BEAM DESIGN PARAMETERS	
AASHTO Specifications	LRFD 7th edition with 2014 interims
Structure Type	Simple Span
Deck Concrete Strength	4000 psi
Deck Concrete Density	150 lb/ft^3
Prestressing Strand	270 ksi Low Relaxation - (0.500" or 0.600" diameter)
Shear Reinforcing	AASHTO M 31 Grade 60
Alternate Shear Reinforcing	Welded Wire Reinforcement - AASHTO M5S, M221, or MS4
Section Property Calculations	Gross Section
Prestress Loss Method	Approximate Losses per LRFD 5.9.5 and 5.9.5.3
Shear Computation Method	Sectional Model per LRFD 5.8.3
Beam / Slab Interface	Intentionally Roughened to 1/4" amplitude
Load Rating Requirements	AASHTO LRFR Design Load

PRESTRESSED BEAM LOAD TABLE

LOAD TYPE	LOADS	APPLICATION METHOD
Barrier Load	0.173 kip/ft per rail	Equally to all beams
Future Wearing Surface	10 lb/ft^2 applied between curbs	Equally to all beams
Interior Diaphragm	3.233 kip/diaphragm	At point load
Exterior Diaphragm	1.616 kip/diaphragm	At point load
Additional Dead Load	--------	--------
Live Load	LRFD - HL-93	per AASHTO LRFD

DEAD LOAD DEFLECTION TABLE

TYPE MTS-54 PRESTRESSED CONCRETE BEAM

SPAN LENGTH		TENTH POINT				
		0.1	0.2	0.3	0.4	0.5
123' - 0"	INT.	7/8"	1 5/8"	2 3/16"	2 9/16"	2 11/16"
	EXT.	7/8"	1 11/16"	2 1/4"	2 11/16"	2 13/16"

NOTE: Deflections symmetrical about 0.5 point and do not include beam dead load.

SHEET NO. B7

ERECTION PLAN

SCALE: 1" = 10'-0"

BRIDGE OVER SWAN RIVER

AT STA. 275+49.00

REFERENCE POINT 4 + 0.488

ROUTE S-209

FEDERAL AID PROJECT NO. STPB 209-1(9)4

FLATHEAD & LAKE COUNTIES

PRELIMINARY

MDT MONTANA DEPARTMENT OF TRANSPORTATION

BRIDGE BUREAU

REVISED
REVISED
REVISED
REVISED
CHECKED
DRAWN 5-1-17 T.J.B.
DESIGNED
SDATES STIMES SFILEABBREVS

UPN NUMBER 6848000

MDT STRUCTURE 06381

DRAWING NO. XXXXX

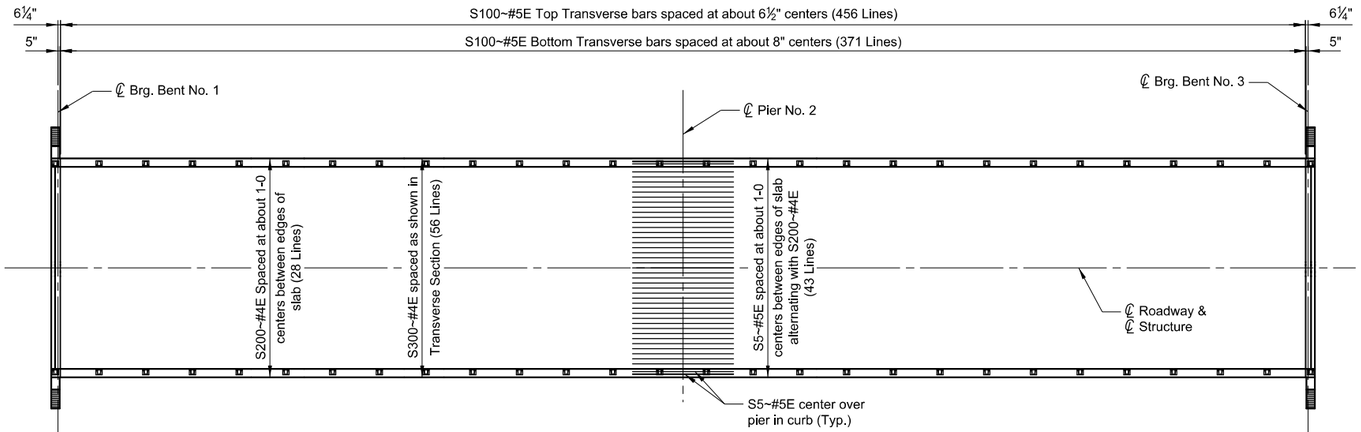

REINFORCING STEEL PLACEMENT DIAGRAM

Scale ~ 1" = 15'-0"

BILL OF REINFORCING STEEL

(ALL DIMENSIONS ARE OUT TO OUT)

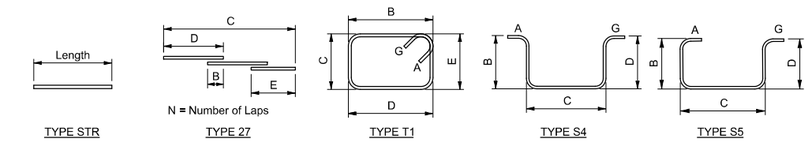

Mark	Size	No.	Type	Length	A	B	C	D	E	G	N
S100	#5E	827	STR	43-0							
S200	#4E	44	27	262-4		2-4	248-4	40-0	22-4		6
S300	#4E	56	27	262-4		2-4	248-4	40-0	22-4		6
S5	#5E	47	STR	20-0							
C300	#4E	4	27	263-10		2-4	249-10	40-0	23-10		6
C1	#4E	670	T1	5-2	4½"	1-3	11"	1-3	11"	4½"	
D1	#4E	144	S4	8-6	4½"	3-7	7"	3-7		4½"	
D2	#4E	48	T1	5-4	4½"	7"	1-8½	7"	1-8½	4½"	
D3	#4E	48	T1	6-8	4½"	7"	2-4½	7"	2-4½	4½"	
D4	#6E	48	STR	7-11							
D5	#4E	96	STR	7-11							
D6	#6E	24	STR	6-0							
D7	#4E	48	S5	3-6	4½"	2-2	7"	2-2		4½"	
D8	#6E	16	STR	7-11							

4

NOTE: 4" additional per lap splice has been provided for construction tolerances.
Lap #4E longitudinal bars 2-0 minimum, 2-4 lap provided.
Lap #5E longitudinal bars 2-5 minimum, 2-9 lap provided.

NOTE: See Std. Dwg. No. SL-8 for additional slab, rail and threaded insert details.

3/17
STANDARD 6/17

APPLICABLE FOOTNOTES

3 4

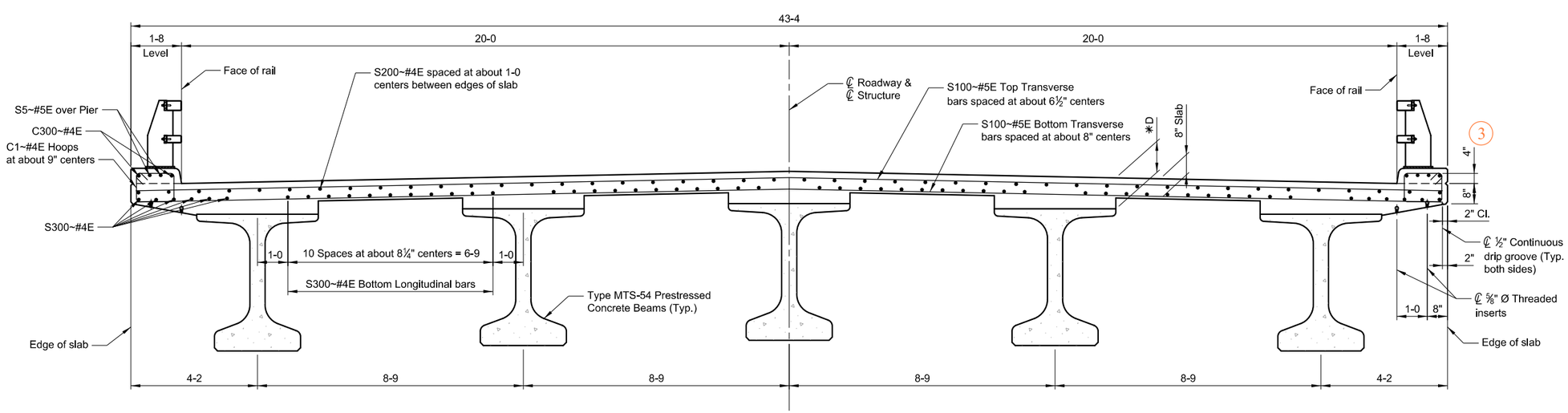

3

TRANSVERSE SECTION

SHEET NO.
B8

SLAB DETAILS

SCALE: As Noted

BRIDGE OVER SWAN RIVER

AT STA. 275+49.00

REFERENCE POINT
4 + 0.488

ROUTE
S-209

FEDERAL AID PROJECT NO.
STPB 209-1(9)4

FLATHEAD & LAKE COUNTIES

PRELIMINARY

MONTANA DEPARTMENT OF TRANSPORTATION

BRIDGE BUREAU

SDATES	STIMES	$FILEABBREV$
DESIGNED		
DRAWN	5-1-17	T.J.B.
CHECKED		
REVISED		
REVISED		
REVISED		
REVISED		

UPN NUMBER
6848000

MDT STRUCTURE
06381

DRAWING NO.
XXXXX

3D PDF

TYPICAL STUB ABUTMENT

TYPICAL PILE SUPPORTED INTERMEDIATE BENT

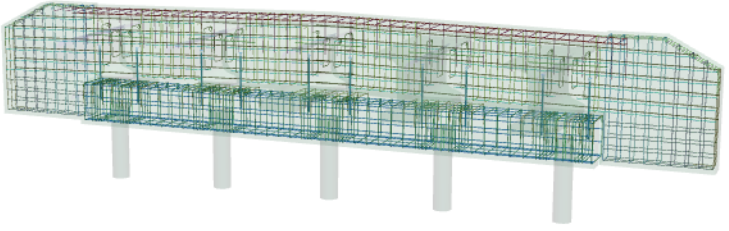

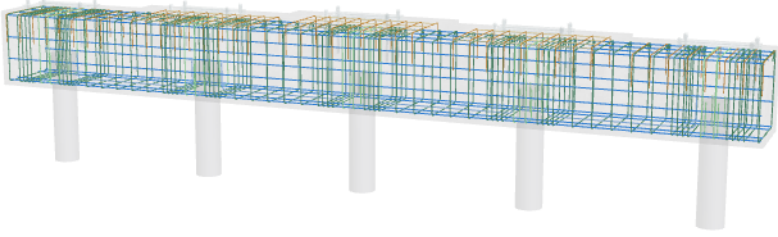

FOOTNOTES

COMMON NOTES & DETAILS

SAMPLE DRAWINGS

COMMON BRIDGE DETAILS & NOTES GUIDE FOOTNOTES

COMMON NOTES & DETAILS

1. Choose the appropriate values from the table to fill in the values in the detail.
2. Use this detail on bridge barrier projects requiring bridge barrier to attach to median rail as shown on Det. Dwg. No. 605-00. This detail requires the details from STD Dwg. No. SL-5 to be part of the plans package. Where there is no conduit in the barrier, remove the conduit and the associated dimensions and the callouts for the Side View.
3. Use these dimensions for all barrier and curb bars.
4. Place these details on the abutment sheets for a Bulb Tee Bridge. Provide similar details for a Tri Deck Bridge
5. 2" x 3/8" Strap is only necessary when total girder depth exceeds 5'-0.
6. Permissible shop splice locations based on MDT Structures Manual Page 18.7(8) Figure 18.7F.
7. Use the "Base Flood" Hydraulic Data for bridges designed to Q100, for bridges designed for water elevations other than Q100 use the "Design Flood" Hydraulic Data

COMMON BRIDGE DETAILS & NOTES GUIDE FOOTNOTES

SAMPLE DRAWINGS

1. Left and Right profiles cut at faces of outermost rails on each side of CL Roadway rounded to the nearest foot.
2. Do not dimension the cap or the pile locations in relation to the cap. Only dimension the piles and their location with respect to the CL Roadway.
3. Do not show these dimension or callouts on the plans.
4. These are the standard lengths of these bars on Standard Stub Abutments, Piers and Slabs.
5. At abutments always use a 5’-0” seat width at interior beams or 2’-6” from CL Beam toward adjacent beam at exterior beam seats.
6. Bar layout shown is for Std. Stub Abutment, adjust dimensions accordingly.
7. Show bearings and anchor bolts in all views at abutments and intermediate bents.
8. For different drawings for each abutment or a single intermediate bent the table may be omitted and elevations may be placed directly in the Plan View.
9. Reinforcing shown around and over piles is for Seismic Zone A & Minimum lateral loads. Investigate reinforcing for other conditions.

GUIDES

BRIDGE BORING LOG DRAFTING PROCEDURE

BRIDGE REFERENCE POINT LOCATION PROCEDURE

INSERT BRIDGE COMMON DETAILS

DETAIL BRIDGE PLANS IN SINGLE FILE

This Procedure is only for borings that can be generated in microstation format from Geotech.

NOTE: All borings will be drafted to have a scale of 1" = 15'-0".

NOTE: All borings will be drafted completely in the border in the sheet model.

NOTE: Place the SUMMARY OF LOG OF BORINGS below the Footing Plan.

Use only one method of placing borings in the plan sheets. Ex. Hand Drafted or Geotech Produced, if some borings can't be produced by Geotech, this will require hand drafting of all borings.

BRIDGE SUMMARY OF LOG OF BORINGS

1) Place borings received from Geotech on DMS.
    a. The borings will need to be requested by email from Geotech. Only request the borings that are relevant to the bridge job. The bridge detailer will receive a microstation file of each boring requested. Name the files as outlined below.
        i. Filename: XXXXXXXBRGBLXXX.DGN
            1. The three digit number at the end of the filename should be the number of the boring ex. (001, 052, 103)
2) Place the Elevation Scale (Cell: OB_AN_Scale) at a scale of 0.0055555 directly in to the border in the sheet model and modify as necessary.
    a. When placing this cell verify that "Scale Annotations" is not checked.
    b. Fill in the scale text using the "Auto Fill In Enter Data Fields"
3) Draw the tracer lines for the scale and borings as required directly in the border in the sheet model.
4) Add a title to the detail (SUMMARY OF LOG OF BORINGS)
5) Reference in the boring directly into the sheet model using the following settings. (Also See Figure 1)
    a. Model = Default
    b. Orientation = Coincident – World
    c. Detail Scale = Full Size 1" = 1"
6) After placing the borings, in the reference dialog box disable the annotation scaling for the borings
7) Move the references to the correct location in the border. (The borings will be referenced in to the sheet model at a location that is well beyond the border limits)
    a. To locate the borings at the correct vertical elevation, place the top of boring at a known elevation and adjust the location vertically by taking the difference in the known elevations (placement elevation and top of boring elevation) divided by 180. This is the distance to move the boring vertically (This value will be in feet) to place at the correct elevation
8) Draw the lines connecting the borings with their respective targets in the Footing Plan. This will also get drawn directly in the border.

The boring files submitted for Geotech may need some standard drafting clean up only to prevent lines from crossing over text. This is the only item that should be changed in the borings.

FIGURE 1 (REFERENCE ATTACHMENT)

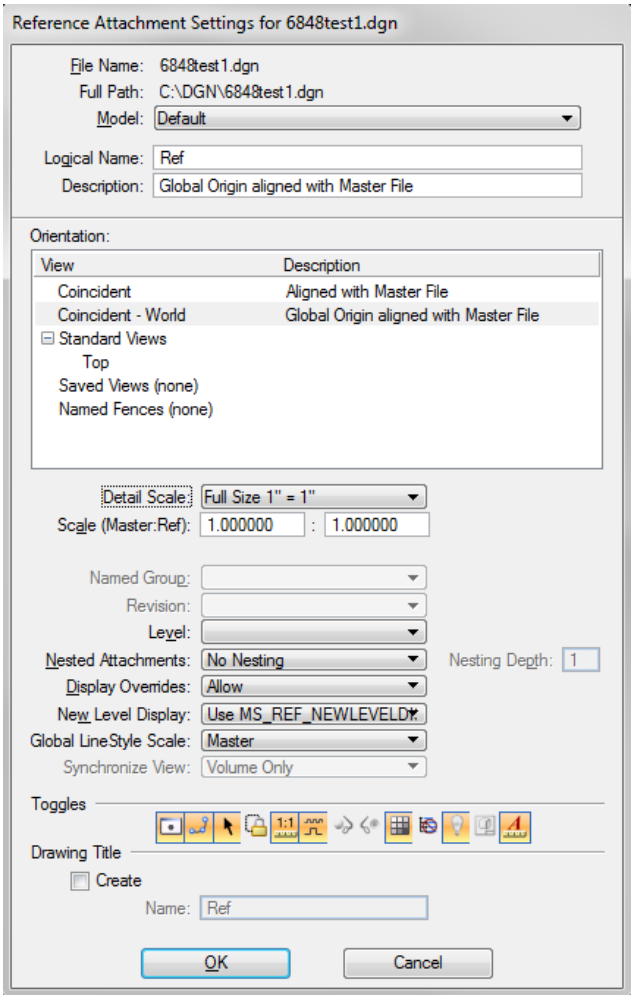

FIGURE 2 (COMPLETED BORING WITHOUT DRAFTING CLEANUP)

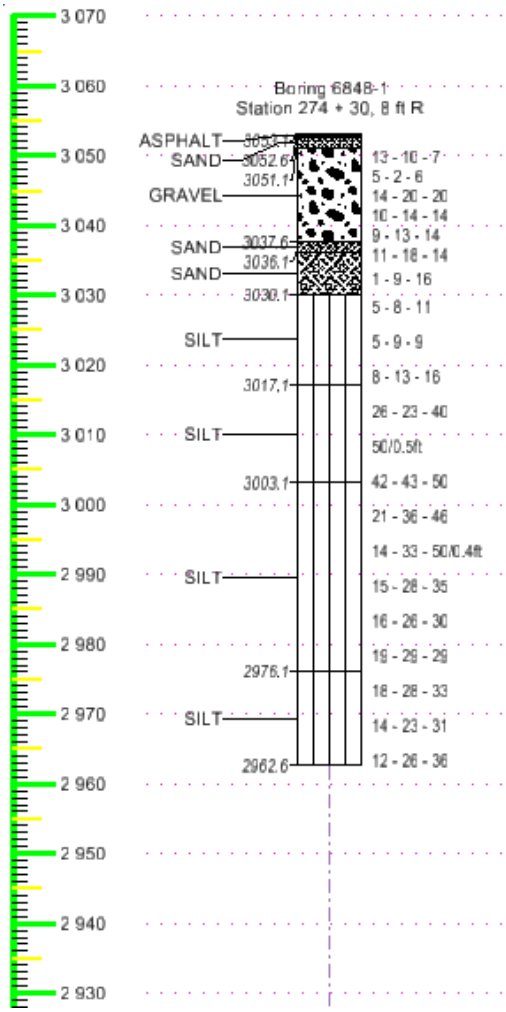

This Procedure is for locating the reference point that is to be placed on the plan sheets.

NOTE: If the coordinates of the new structure are located at a location that is not on a current alignment the system will not return a reference point.

BRIDGE REFERENCE POINT LOCATION

1) Open the following link: http://app.mdt.mt.gov/routeidtool/
2) Click the button for "Get location from coordinate" located in the upper right hand corner of the screen.
    a. 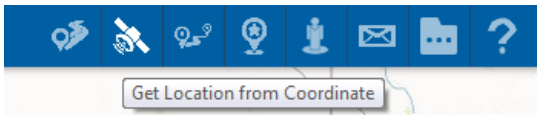

3) Choose the tab "State Plane Feet"
4) Enter the coordinates for the CL Roadway at CL Bridge
    a. These are the coordinates for the station that is displayed in the bridge border.
5) Click "Get Location"
    a. 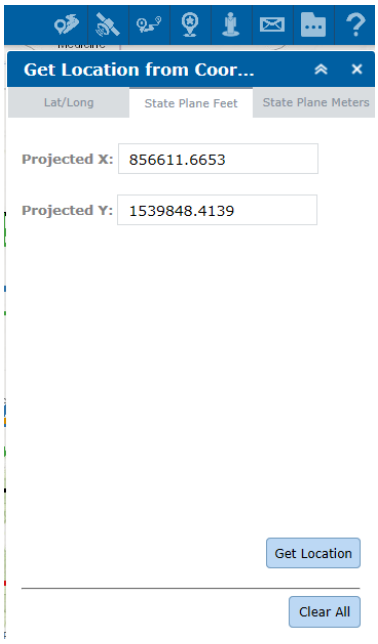

6) The map will then zoom to the location of the coordinates.
    a. If the coordinates are not located on an existing route a message will be displayed under the location in which the coordinates were entered stating
        i. No result for Reference Marker Offset returned
7) Click the icon button for "Locate mileage along a Route"

a. 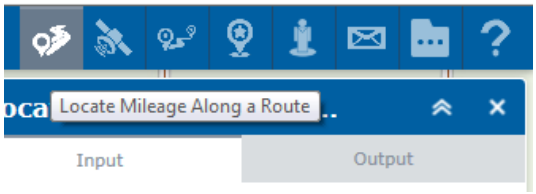

8) Set the “Search Radius” to a distance greater than the distance from the coordinates to the existing route
9) Click the button “Select Points”

a. 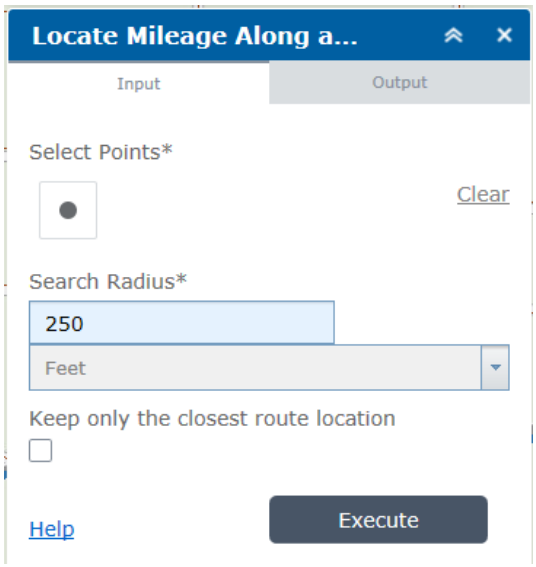

10) In the map view zoom in some on the marker displayed from the coordinate location and click as near to the center point of the circle as possible.
    a. The size of the marker will not change as you zoom in
11) Click the “Execute” button
12) The program will automatically switch to the output tab at the top of the box and display the results

a. 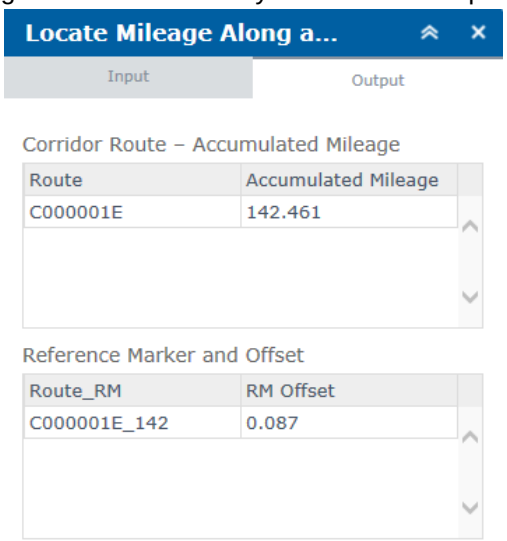

13) You will need the information displayed in the “Reference Marker and Offset” Section of the dialog
    a. Route_RM Column

        i. The last digits beyond the underscore are the reference marker
    b. RM Offset Column
        i. This is the reference point in relation to the reference post

14) For the bridge plans the above example will be displayed as the following in the reference point block in the border
    a. 142+0.087
        i. The reference point requires the following
            1. The plus sign between the reference marker and the reference point
            2. The reference point displayed at 3 decimal places

BRIDGE ROUTE NUMBER IDENTIFICATION

1) The Route displayed in the border will be the Department Route Number
    a. N-1, S-203, P-56, U-5818, L-39-1298, X-81003, I-15
2) These can be found in the dialog that will pop up when a route is clicked in the map view
    a. 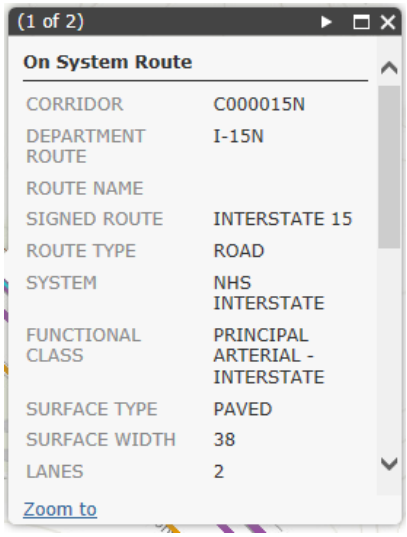

3) The letter at the end of the department route number indicates the roadway direction.
    a. Typically on non-interstate highways this will display as an “N” for north/south highways or “E” for east/west highways
    b. On interstate route this will change depending on the direction of travel on the interstate route.

FINISHED SHEET BORDER AREA

This procedure is for inserting the common bridge details as models into the plan sheets.

IMPORT COMMON BRIDGE DETAIL MODEL

1) Open the Bridge Models Dialog

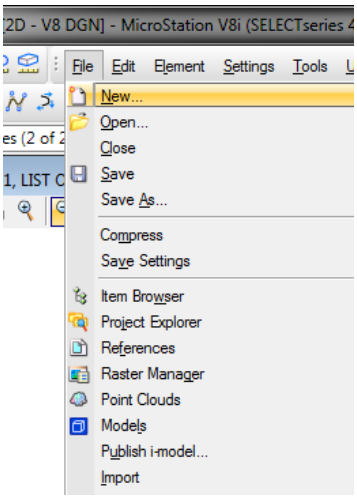

2) Click Import Model

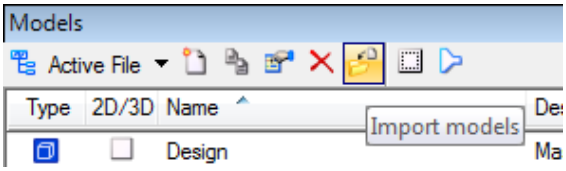

3) Browse to W:\\WORKGROUP\BRSTD\CELL
4) Select the file containing the models
    a. BridgeDetailModels.dgn
5) Choose the model which you want to import and click OK.
    a. Model names match the detail names shown in the Common Bridge Details and Notes Guide

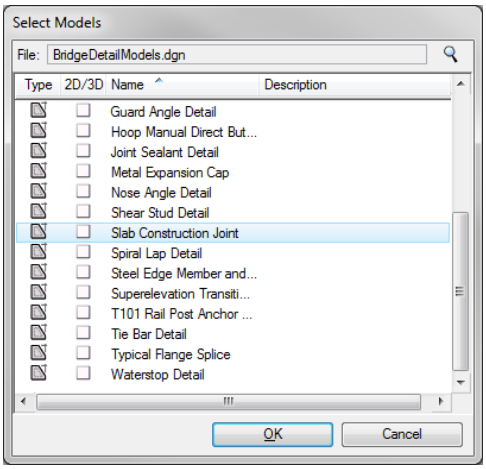

6) After selecting OK the new model will automatically open in the current microstation file
    a. This detail may now be edited directly if need in this location
    b. This detail now has the annotation scaling correctly set for the specific detail that which will be the scale it is inserted into the plans at

REFERENCE ABOVE DETAIL INTO PLANS

1) In the Bridge Models dialog switch to the sheet model in which the detail will be referenced
2) Select the new model that is to be placed in the sheet border and drag it out of the bridge models dialog and to the sheet itself. (Click and Drag)
3) Once the mouse button is released a dialog box will appear informing you that you are about to reference a file.
    a. Select Ok in this dialog box
4) An outline of the applicable model view will be visible. This is the extents of the detail that is going to be placed in the sheet.
    a. Locate the detail in the appropriate location and right click to accept.
5) A microstation drawing title will appear with the detail, this needs to be removed.
    a. Delete this drawing title
    b. After selecting delete the following dialog will appear asking about deleting the reference or just the drawing title
    c. Click “No” in this dialog box

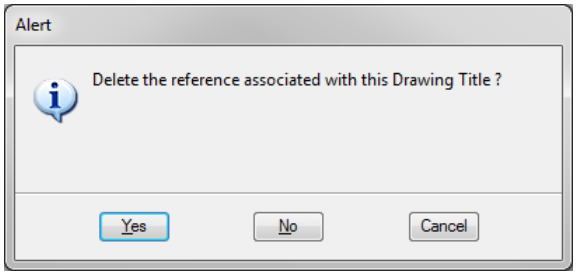

The detail is now referenced into the microstion sheet

SINGLE FILE BRIDGE PLANS FLOW CHART

This guide will layout the process for detailing the bridge in one single design file.

This guide is written using the 1000-unit workspace. The procedure is the same for the 10,000-unit workspace.

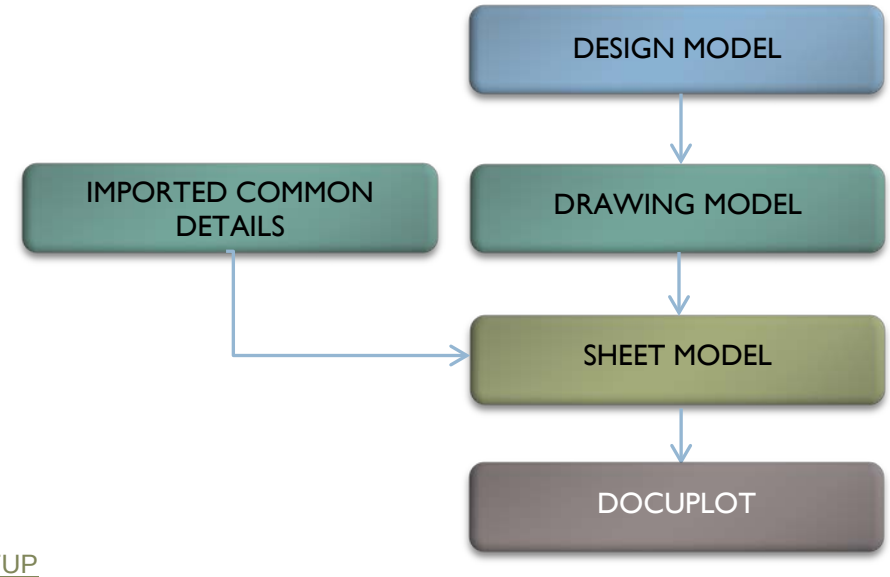

FILE SETUP

1) Create a new design file
   a. Filename: XXXXXXBRMAP001.DGN where XXXXXXX is the project UPN Number
   b. Seed File: BR_GP_SEED_SINGLE
      i. The new file will contain the following models
         1. Design
            a. Drafting of the bridge objects will take place in this model
         2. Profiles
            a. The existing ground profiles and finished grade profile
         3. Drawing Seed
            a. This is the seed file for all new drawing models in the design
         4. Sheet Seed
            a. This is the seed file for all new sheets in the design
         5. Sheet Project Info
            a. Contains all the project specific border information
2) Open the "Sheet Project Info" Model
   a. Revise the text that is common to all sheets for that bridge in the border
      i. This is the blue text
3) Detail all bridge plans in the "Design" Model, except for the general layout profiles
   a. Do not dimension or annotate anything in the "Design" model. All this will be done in the "Drawing Model
4) Place the general layout profiles in the "Profiles" model and reference these into the "Design" model.

DRAWING MODEL CREATION

1) Create a saved view of the detail

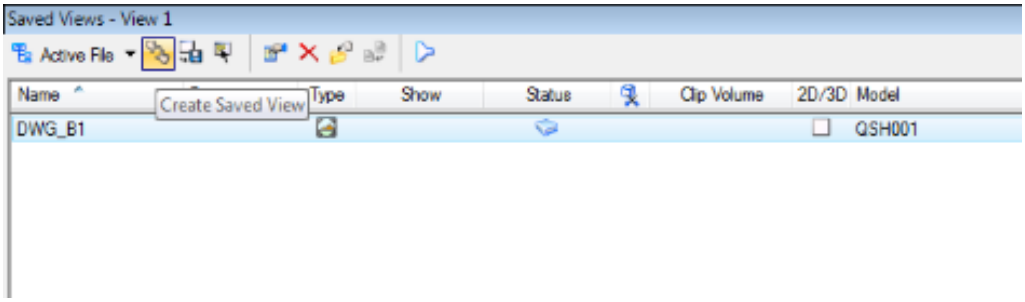

2) In the create saved view Dialog box set the following settings
   a. Name: Use MDT Standard file class and the title of the detail. Ex. GEN_Plan
   b. Method: From View
   c. View Type: Saved View
   d. Create Drawing: Verify that this is checked on

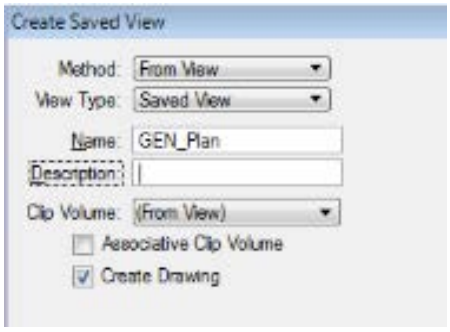

3) Click to accept the current view
4) In the create Drawing Dialog box set the following settings

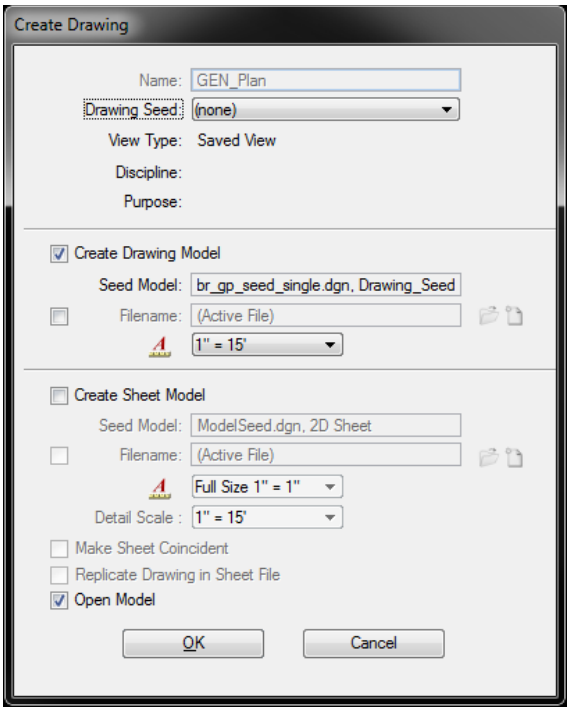

   a. Create Drawing: Checked On
   b. Seed Model: Microstation should default to the file that is shown above
   c. Annotation Scale: This is the scale that the drawing will be placed on the sheet at
   d. Create Sheet Model: Do NOT check this box
      i. Sheets need to be created by the method above
   e. Open Model: Check this box on

5) Select OK

a. Microstation will take you to the new drawing model that was just created
b. In this new model dimension and annotate the detail

SHEET MODEL CREATION

1) Open the Microstation Models Dialog Box
2) Choose create new model

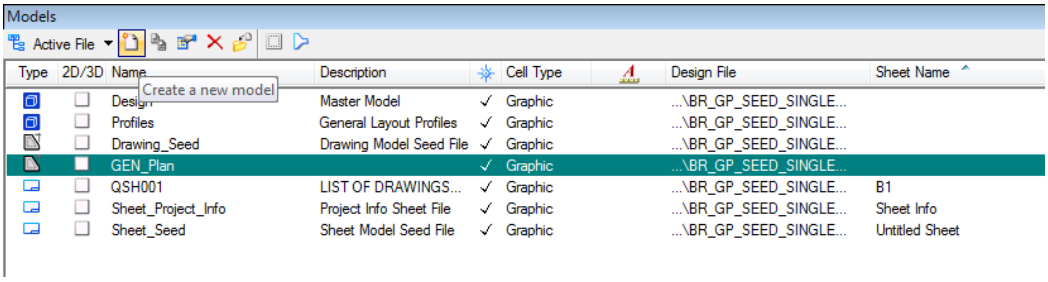

3) In the create model Dialog box set the following settings
   a. Type: Sheet from seed
   b. Seed Model: "Sheet Seed" from the current file models list of the XXXXXXBRMAP001 file you are working in.
   c. Name: Use MDT Standard file class and Series Number. Ex. GEN001.
   d. Description: The sheet name that will appear in the border of the sheet
      i. The file will use this to fill in the title in the border.
   e. Sheet Name: The sheet number of the sheet in the plan set
      i. The file will use this to fill in the sheet number in the border
      ii. Sheet Number: Use 0 for preliminary sheets until drawing numbers are assigned.
         1. The file will use this to fill in the drawing number in the border.
            a. Letters are not allowed in this field
   f. Ensure the following items are set and match the image below
      i. Annotation Scale 1" = 1"
      ii. Propagate Annotation Scale checked on

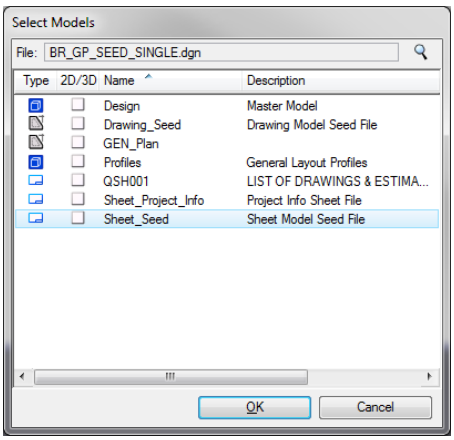

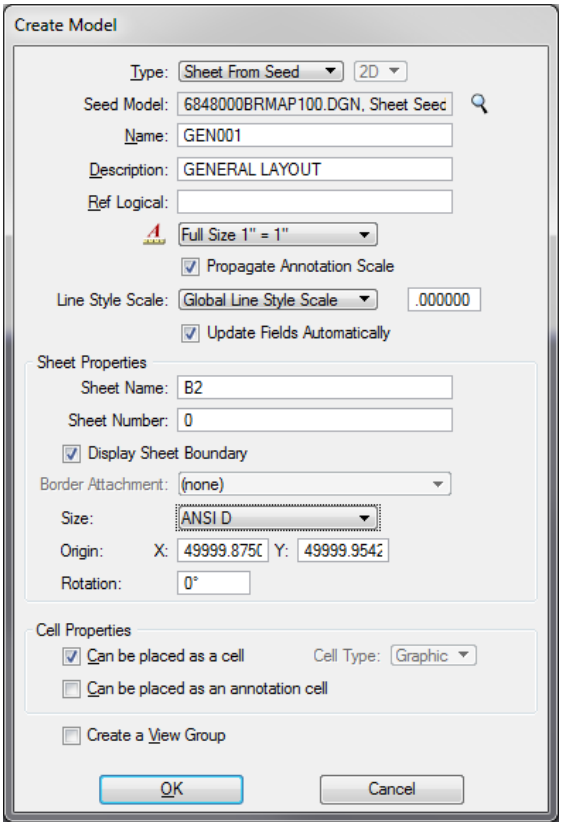

iii. Update Fields Automatically checked on
iv. Display Sheet Boundary check on
1. Verify the size and origin match what is shown above

4) Select Ok
a. Microstation will take you to the new sheet model that was just created
i. All border information will be filled in except:
1. Drawing Scale
2. Design, Drawn, & Checked Fields

PLAN SHEET CREATION

1) Drag and drop the newly created drawing models in the appropriate sheets
a. See Insert Bridge Common Details Guide for procedure.
2) Create a saved view of each sheet with the proper levels turned on or off.
a. Name: DWG_XX
i. Where "XX" is the sheet number
3) Fill in the following items in the border
a. Drawing Scale
b. Design, Drawn, & Checked Fields
i. Drawn By will be auto populated by the "Sheet Project Info" model text.

PLAN SHEET CREATION FOR CPB

NOTE: Docuplot requires a separate file for each plan sheet for it to process a Contract Plans Book (CPB)

1) Create a new blank file using the correct seed file and name per the standard naming convention
c. Seed: BR_GP_SEED
2) Reference the appropriate sheet file from the file XXXXXXBRMAP001.DGN into the sheet file in the newly created appropriately name file
a. Coincident World
b. Live Nesting = 3
c. Map reference file correctly ex. MTBR:
3) Verify the correct levels are on in the reference files in these new individual files.

NOTE: If any sheet has been renamed after creating the corresponding sheet for the CPB, the corresponding CPB sheet will need to be opened and the reference file changed to the new sheet name.

REVISIONS

ISSUED 5-1-17

COMMON BRIDGE DETAILS & NOTES GUIDE

Issued May 1, 2017

The following lists the changes and revisions to MDT's detailing and engineering practices from the Structures Manual and previous versions of the Standard Bridge Notes and Details book, which have been incorporated into the new Common Bridge Details & Notes Guide Issued May 1, 2017.

NOTES:

- Added a new note denoting the suffix "E" & "W" & "CR"
    - These will now be placed with the standard notes on the general layout.
- Remove the "Utilities" note from the general layout notes
    - This information is found in the Standard Specifications
- Moved the pile notes from the end bent and intermediate bent sections to the footing plan
- Combined the end bent and intermediate bent sections together
    - The same notes were typically used for both
- Changed the erection plan section to "Slab & Bearings"
- Added some additional rehab notes that have been used lately on several rehab jobs
- Added Standard Structural Steel Notes
- Added a note to the End & Int. Bent notes about reinforcing in conflict with anchor bolts.
- Separated out the notes and details into separate sections
- Added a note denoting the suffix "CR" for corrosion resistant reinforcing
- Remove most of the bulb tee notes and details
    - These will be incorporated into the new bulb tee standard drawing
- Updated the Beam Design Information Table
    - New material specs
- Revised standard rebar lap lengths
    - Now meet the requirements of the 7th edition 2016 interims
- Added a new Reinforcing Steel Cover Note
    - No longer need to show the cover on every detail, only where and exception to the note is required.
- Removed the "Joint Sealant" notes
    - These are covered under the standard special provisions
- Removed the pile note about "not driving service piles before test pile analysis"
- Revised the pile re-drive note to clarify that the time frame is for a test pile

DETAILS:

- Revised the "spiral lap detail" to include a table for weld size
- Revise the "metal expansion cap detail" to just a single detail
    - Detailer will fill in the appropriate values based on the table
- Added a hoop butt weld detail
- Added Standard Barrier and Curb Reinforcing dimensions
- Revised the drain details
    - Support strap now required when girder depth exceeds 5'-0" steel and prestressed concrete girders
- Removed several like details
    - Composed the like details into a single detail that the detailer can revise to meet their conditions.
- Removed the deck grid from the rehab section

    - This detail is not used any more
- Added Standard Structural Steel Details
- Added Footnotes to the details and sample drawings
- Revised the L-Bar in backwall that laps with Top Longitudinal bars to extend farther into slab
- Added additional stirrups and u-bars around and over piles
    - Required for minimum lateral loads
- Added additional bar in bottom of caps between piles
    - Required to meet temperature and shrinkage requirements
- Added additional rebar at ends of caps
    - Need to place U-Bars both directions to lap with cap bars
- Revised the beam seat reinforcing
- Footing Plan will now be placed above the borings to match format of other sheets (Plan above Elevation)
- Remove all but the "Joint Sealant" details except for the detail at concrete faces
    - The other details are no longer required due to the specifications of the sealant
- Modified the Bridge Deck Repair and Thick Overlay Definition detail
- Added a detail for Bridge Deck Repair and Thin Overlay
- Added details for Guard Angle Removal

STANDARD DRAWINGS:

- Updated SL-5, SL-6, SL-7, & SL-8
    - 2 ½" cover on slab
    - Top Longitudinal bars spaced at 1'-0" centers
    - S6 bar omitted and S5 bar now alternates with S200 bars
    - S5 bar now extends 10'-0" from centerline (20'-0" Total Length)
    - Revised references to "Erection Plan" to "Other sheets".
- Updated SBR-W740 & SBR-W830 standard drawing for placing posts after curb is placed
- Updated SBR-BRR, SBR-T101, SBR-W830, SBR-W740, SBR-PED, SBR-HND, Drilled Foundation Anchor Post for new material specifications
- Revised the Drilled Foundation Anchor Post Standard Drawing
    - It is now applicable to a new bridge and a timber bridge rail revision
    - This is a Draft version
- Made the Timber Bridge Rail Revision sheet a standard drawing.
    - Detailer only to show the rail spacing on the bridge sheets for a timber rail revision
        - Will need to include SBR-T101 and Drilled Anchor Post Standard Drawings
    - This is a Draft version

NEW ITEMS:

- New bulb tee standard drawing
- New tri deck standard drawing
- New voided slab standard drawing
- New standard prestressed concrete girder shapes drawing
- Added a sheet showing the old standard rail drawings
- Added a sheet showing the standard bar bends and hooks
- Added "Sample" Bridge Drawings

- Added footnotes to the Common Notes and Details as well as the new sample drawings

OTHER ITEMS:

- List the items in the quantities table in sequential order matching the item number of the respective items
- Use the actual bid item names for the quantities shown in the quantities table