Investigation of Prefabricated Steel-Truss Bridge Deck Systems

Report for Task 1
Literature Review

by

Damon Fick Assistant Professor
Montana State University

Michael Berry Assistant Professor
Montana State University

Jerry Stephens Professor
Montana State University

Western Transportation Institute Civil Engineering
Montana State University – Bozeman

Prepared for

Montana Department of Transportation
2701 Prospect Avenue
P.O. Box 201001
Helena, MT 59620-1001

June 3, 2016

Abstract

This report summarizes the literature review (Task 1) done for the Prefabricated Steel Truss Bridge Deck Systems project. Accelerated bridge construction (ABC) is rapidly gaining momentum in the United States as a common building practice due to the increased safety and decreased impact on the public as a result of reduced construction times. A prototype bridge structure has been proposed by Allied Steel, Inc. (Lewistown, MT) as a potential alternative for ABC projects in Montana. The system consists of a prefabricated welded steel truss topped with a concrete deck that would be cast-in-place on the truss at the fabrication facility. The composite members would be transported to the site, where they would be lifted on to the foundation. Four primary topics identified as most pertinent to this project were researched in the literature: 1) modular systems, 2) concrete decks, 3) welded connections subjected to fatigue, and 4) full-scale experimental studies.

Findings from the literature suggest the proposed steel truss/concrete deck modular system could be a viable alternative for ABC. Notably, a top ranked ABC methodology consists of a similar system that uses a steel wide flange beam topped with a composite concrete deck section, rather than the truss element proposed by Allied Steel, Inc. A possible issue with the proposed system is the fatigue-sensitive nature of the welded connections in the trusses, and this issue could influence the geometry and design of the truss. Rotational restraints at the welded connections must be included to accurately assess their effects on member stresses. In constructing the modular truss and deck elements, an innovative concrete casting technique used with the steel wide flange ABC system will be explored to potentially reduce the in-service stresses in the bridge structure.

Table of Contents

Abstract i

List of Figures iii

List of Tables iv

Literature Review 1

1. Introduction 1

2. Description of Proposed Prefabricated Bridge System. 1

3. Results 2

    3.1. Modular Steel Systems 3

    3.2. Concrete Decks 14

    3.3. Welded Connections Subjected to Fatigue 18

    3.4. Full-Scale Experimental Studies 21

4. Summary and Future Work 23

References 26

List of Figures

Figure 1: Proposed elevation and cross section of prefabricated steel truss bridge system A, option 1 (Table 1). 3
Figure 2: Detail of a Bailey Bridge panel. (Klaiber and Wipf 2004) 4
Figure 3: Bailey Configurations (SDR Engineering Consultants 2005)..... 4
Figure 4: Bailey Bridge launching diagram (SDR Engineering Consultants 2005)..... 4
Figure 5: Acrow Bridge assembled using several layers of panels to achieve the span. (Acrow Corporation of America) 5
Figure 6: US Bridge design, the "Viking Bridge." (U.S. Bridge 2015) 7
Figure 7: Crosier Bottom Crossing (McConahy 2004)..... 8
Figure 8: Prefabricated wide flange beams topped with a composite concrete deck 8
Figure 9: Prefabricated Bridge Units cast upside-down (Fort Miller Company 2016) 9
Figure 10: I-87 Prefabricated Bridge Unit Installation, I-87 bridge reconstruction (Fort Miller Company 2016) 10
Figure 11: Roize Bridge cross section and elevation. 10
Figure 12: The space truss superstructure of the Roize Bridge (Muller 1993)..... 11
Figure 13: Lully Viaduct cross section and elevation, SI dimensions (Dauner, Oribasi et al. 1998) 12
Figure 14: Lully Viaduct space truss (Dauner, Oribasi et al. 1998). 12
Figure 15: Modular precast concrete bridge concept (SDR Engineering Consultants 2005)..... 13
Figure 16: Continuous precast modular bridge concept (SDR Engineering Consultants 2005). . 14
Figure 17: Typical Transverse Sections of Prefabricated Bridge System Models (Au, Lam et al. 2008)..... 16
Figure 18: Closure strip details for four configurations considered (Au, Lam et al. 2008)..... 16
Figure 19: Proposed cross sections for a cast-in-place concrete deck without formwork (SDR Engineering Consultants 2005). 18
Figure 20: Connection configurations tested (Battistini, Wang et al. 2014) 19
Figure 21: Angle-plate cross-frame specimens (McDonald and Frank 2009)..... 20
Figure 22: Full-scale Bailey Bridge Model (King, Wu et al. 2013) 21
Figure 23: Hillsville Truss (Hickey, Roberts-Wollmann et al. 2009)..... 22

Figure 24: Typical cross-sections – single and two-truss prefabricated steel truss bridge configurations 25

List of Tables

Table 1: Prototype bridge systems 2
Table 2: Recent Bridge Installations using Fort Miller PBU's (Fort Miller Company 2016). 9
Table 3: Comparison of modular bridge systems, adapted from SDR Engineering Consultants (2005) 13

Literature Review

1. Introduction

This report summarizes the literature review (Task 1) completed for the Prefabricated Steel Truss Bridge Deck Systems project. A prototype bridge structure has been proposed by Allied Steel, Inc. (Lewistown, MT) as a potential alternative for accelerated bridge construction (ABC) projects in Montana. Accelerated bridge construction is rapidly gaining momentum in the United States as a common bridge building practice due to the increased safety and decreased impact on the public that results from the associated reduced construction times. The proposed system consists of a prefabricated welded steel truss topped with a composite concrete deck cast-in-place at the fabrication facility. These composite members are transported to the site, where they are set next to each other on a prepared foundation to create the bridge. This literature review was performed to identify the current state-of-practice related to the analysis, design, and construction of similar bridge systems constructed on an accelerated schedule. This literature review is the first of three tasks in the Prefabricated Steel Truss Bridge Deck Project. Results documented in this report will support the Analytical Evaluation (Task 2) and Analysis of Results (Task 3) objectives of the project.

This literature review focused on four primary topics pertinent to the proposed bridge system and this project: 1) modular systems, 2) concrete decks, 3) welded connections subjected to fatigue, and 4) full-scale experimental studies. This review concludes with a summary of the specific information that will be further investigated in the Analytical Evaluation (Task 2). The objective of the Analytical Evaluation is to include recent advancements in prefabricated bridge design into an analytical model to determine if the proposed welded steel truss bridge with an integral precast deck is an economical alternative for bridge construction projects in Montana.

2. Description of Proposed Prefabricated Bridge System.

Two prefabricated steel truss bridge systems with two different options for steel member cross sections have been proposed for ABC applications by Montana steel fabricator Allied Steel, Inc. (Lewistown, MT). Bridge geometry and cross sections for the different systems are presented in Table 1. A typical elevation view of the proposed system is shown in Figure 1 (specifically,

System A, Option 1 is shown in this Figure). Vertical HSS tubes and diagonal double-angle members are welded to the webs of continuous WT sections that form the top and bottom chords of the steel truss. The concrete deck is cast-in place at the fabrication facility to form the prefabricated composite system. Two (or more) composite segments are bolted together longitudinally to form the complete bridge span (Figure 1a). Similarly, two (or more) segments are bolted together transversely to generate the desired bridge width (Figure 1b). The longitudinal and transverse joints between the modular elements are reinforced and filled with concrete to create continuity between the prefabricated segments (Figure 1b).

Table 1: Prototype bridge systems

<table>
<tr><th rowspan="2">System</th><th rowspan="2">Option</th><th rowspan="2">Span (ft)</th><th rowspan="2">Width (ft)</th><th rowspan="2">Deck Thickness (in)</th><th rowspan="2">Truss Depth (in)</th><th colspan="4">Members</th></tr>
<tr><th>Top Chord</th><th>Bottom Chord</th><th>Vertical</th><th>Diagonal</th></tr>
<tr><td rowspan="2">A</td><td>1</td><td rowspan="2">148</td><td rowspan="2">32</td><td rowspan="2">7</td><td rowspan="2">75</td><td>WT 9x</td><td rowspan="2">WT 18x / WT 20x</td><td>HSS 5x5</td><td>LL 5x3 / LL 6x3</td></tr>
<tr><td>2</td><td>WT 12x</td><td>W 8x</td><td>W 8x</td></tr>
<tr><td rowspan="2">B</td><td>1</td><td rowspan="2">108</td><td rowspan="2">36</td><td rowspan="2">8.25</td><td rowspan="2">56</td><td rowspan="2">3/4in. PL</td><td rowspan="2">2in. PL</td><td>W 8x</td><td>W 8x</td></tr>
<tr><td>2</td><td>W 8x</td><td>1in. PL</td></tr>
</table>

3. Results

In reviewing these systems with a view toward investigating their deployment, four subject areas of interest were identified and researched in the literature: 1) modular steel systems, 2) concrete decks, 3) welded connections subjected to fatigue, and 4) full-scale experimental studies. Each topic, discussed in the following subsections, was selected for its impact on the analysis, design and construction of a prefabricated welded steel-truss bridge in Montana.

With these topics in mind, a thorough search was performed using four resource databases: Engineering Village, MDT Library, Transportation Research Board, and Google Scholar. The keyword “Prefabricated Bridges” was successfully combined with “Steel Truss,” and “Deck Systems” to identify potential works of interest. The articles were reviewed and further organized into categories related to the components of the proposed modular steel system. This review and filtering process identified 22 sources (journal publications, trade journal articles, and

state, federal, and private reports) as the most relevant to the proposed prefabricated steel truss bridge.

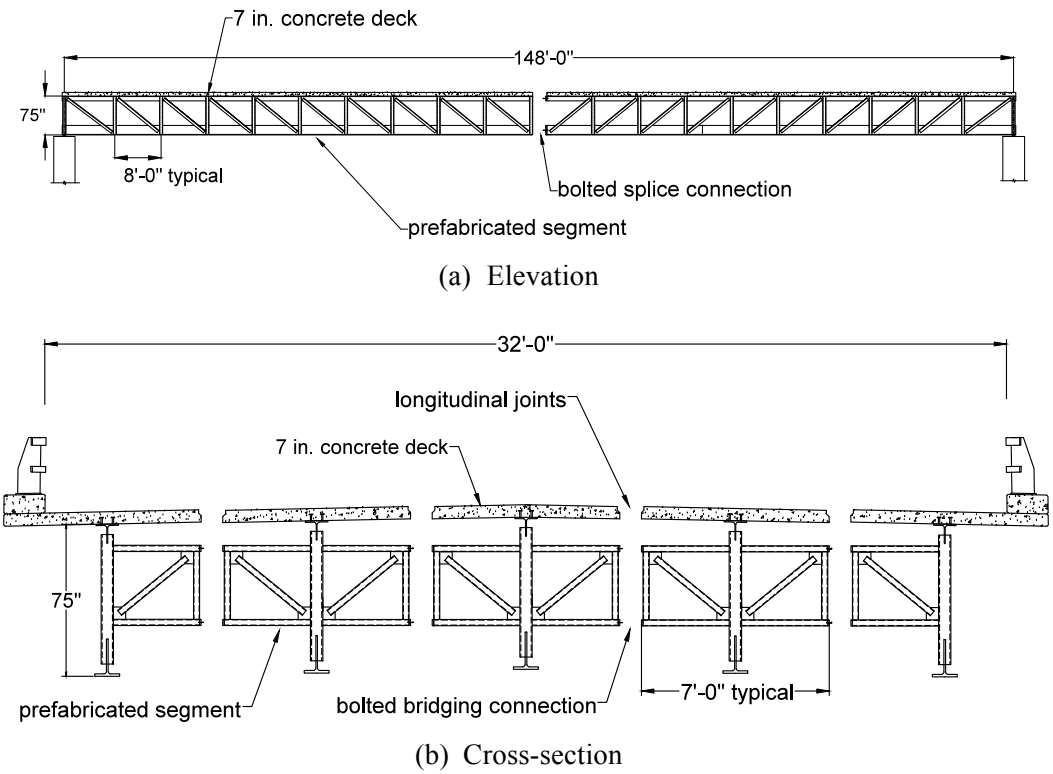

Figure 1: Proposed elevation and cross section of prefabricated steel truss bridge system A, option 1 (Table 1).

3.1. Modular Steel Systems

Prefabricated steel bridges have been constructed using a truss configuration, most notably in the Bailey Bridge and its successors. Other prefabricated steel systems include steel girders with composite concrete decks and composite space trusses.

Steel Trusses

One of the earliest forms of prefabricated bridges was the Bailey Bridge. Patented in 1943, the Bailey Bridge was designed by Sir Donald Bailey for use by the Allied Forces to build crossings during World War II (SDR Engineering Consultants 2005). A typical longitudinal section of a Bailey Bridge is shown in Figure 2. These sections, designed to fit in a standard military truck, are bolted together in the field at the top and bottom chords to form a through-truss bridge. Five different steel bridge configurations are available, using Standard Bailey Bridge System components (Figure 3). Constructing the Bailey Bridge can be done using a crane to hoist the

assembled configuration in place or launching the structure from one side of the gap to be bridged as shown in Figure 4. Portable Bailey panel bridges are currently available from Bailey Bridges, Inc.

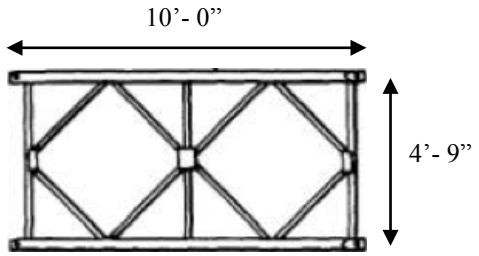

Figure 2: Detail of a Bailey Bridge panel. (Klaiber and Wipf 2004)

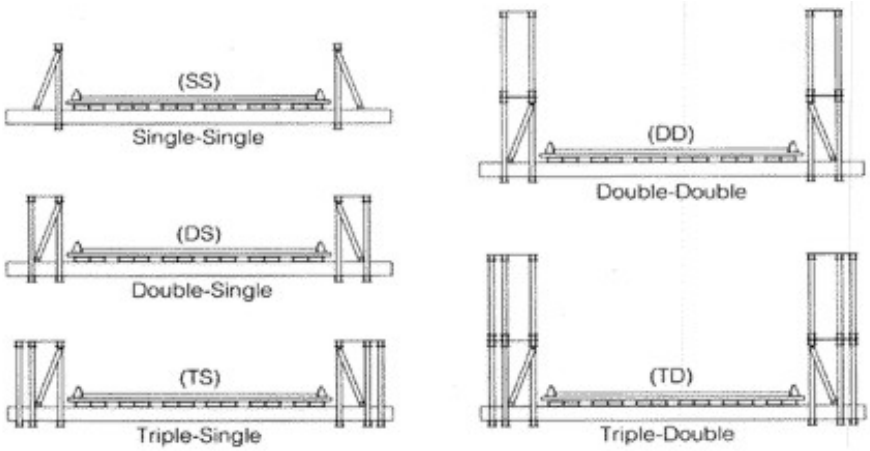

Figure 3: Bailey Configurations (SDR Engineering Consultants 2005)

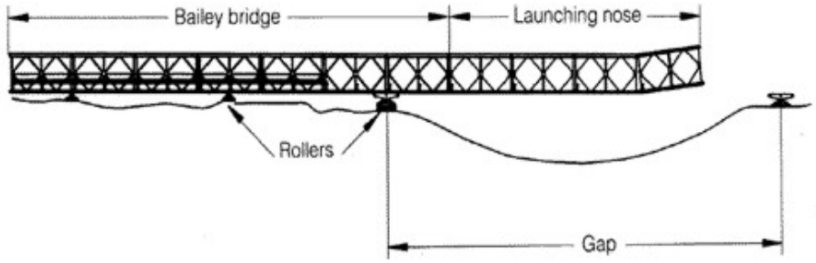

Figure 4: Bailey Bridge launching diagram (SDR Engineering Consultants 2005)

Since the expiration of the Bailey Bridge patent, Acrow Corporation of America and U.S. Bridge have developed modular bridge systems that are similar to the Bailey Bridge. These portable bridge configurations are often used for pedestrian bridges, although many state DOT's,

including Montana, have used them as temporary structures during bridge construction or in the event of an emergency.

The Acrow Panel bridge is made up of three different stock items that are assembled to form the desired configuration. A photo of an Acrow bridge is shown in Figure 5. The truss segments are 10 ft wide, 7.2 ft, tall, and 6.5 in. wide. Spans of up to 230 ft can be created by bolting the panels together and are capable of supporting three lanes of HS 25 load. Standard floor beams span between the trusses and decking panels span longitudinally along the bridge length between the floor beams. Prefabricated steel orthotropic panels are the most common deck type, although steel grids and timber options can be incorporated (Klaiber and Wipf 2004).

Figure 5: Acrow Bridge assembled using several layers of panels to achieve the span. (Acrow Corporation of America)

The Bailey Bridge System has been used in Montana for several temporary crossings where bridges were damaged, deteriorated, or collapsed. A search of Montana's Treasure State Endowment Program (TSEP) project applications and reports, the Department of Commerce project evaluations and funding recommendations, and the Department of Transportation bid packages revealed the following projects used prefabricated steel bridges (State of Montana 2016):

- A 100 ft span, double-single M2 Bailey Bridge configuration was installed over the existing bridge structure crossing Box Elder Creek, near Hammond, MT. Bids were received in August, 2009 to replace the temporary structure with a permanent one.
- Park County installed a temporary Bailey Bridge to replace the Ninth Street Bridge over the Yellowstone River in June, 2008, in Livingston. The bridge was installed over the existing structure and was posted with a speed limit of 5 mph and a maximum vehicle weight of 3 tons.

- A collapsed bridge over Fish Creek near Ryegate, in Golden Valley County, was replaced with a temporary Bailey Bridge. Bids were received in August, 2014 to replace the temporary structure with an 83 ft prestressed bulb-tee beams.
- TSEP emergency funds were used to construct a temporary Bailey Bridge over a damaged bridge crossing Racetrack Creek in Powell County (pre-2005)
- Mineral County used a temporary Bailey Bridge over the 52 ft damaged timber Cedar Creek Bridge (pre-2005).
- In December of 2002, Madison County installed a Bailey Bridge over the deteriorating Upper South Boulder Bridge to provide a temporary crossing until a permanent solution could be implemented.

The panel sizes, span lengths, and load capacities of the Bailey type bridges are consistent with the proposed systems considered in this investigation. Their long history demonstrates that modular prefabricated truss systems are an effective bridge construction strategy. That being said, these bridges are used in a through truss configuration, while the proposed systems use an underslung truss arrangement. The decks in these systems do not act compositely with the trusses, while composite action between the concrete decks and steel trusses in the proposed systems is expected to offer improved structural efficiency and stiffness.

U.S. Bridge, a descendent of the Ohio Bridge Corporation, offers prefabricated truss options that are designed for the Association of State Highway and Transportation Officials (AASHTO) HS10, HS15, HS25, and HL93 loadings (U.S. Bridge 2015). Unlike the Bailey/Acrow Panel bridge, where identical panel segments are bolted together in the field, the U.S. Bridge System uses longer, all-welded truss systems that can then be bolted together in the field. The trusses panels are prefabricated with standard W-sections and the entire welded segments are then hot-dipped galvanized (Klaiber and Wipf 2004). The trusses are through-type with parallel top and bottom chords and are available in standard lengths of up to 150 ft. For longer spans, a camel back configuration is used and is shown in Figure 6. A common deck system includes underslung floor beams carrying simply supported stringers. Traditional concrete filled pans and timber decks can also be provided.

Figure 6: US Bridge design, the "Viking Bridge." (U.S. Bridge 2015)

Completely prefabricating steel-truss bridge superstructures could potentially be a more cost-effective and permanent solution for counties that install temporary bridge structures. Albany County in New York State investigated this alternative to find cost-efficient bridge solutions in rural areas with lower traffic volumes (Heine 1990). The county replaced a 70 ft truss bridge built in 1898 with a Warren trusses with welded connections prefabricated by the Ohio Bridge Corporation. The estimated cost to install the bridge on the existing abutments was $50 per sq. ft and included the cost of material, erection, and placement of a wooden deck. Bid prices were 5 to 6 times this amount for a standard replacement (Heine 1990).

A second example of a permanent welded prefabricated truss installation is the Crosier Bottom culvert in Meade County, Kentucky (McConahy 2004). The solution for the bridge replacement was a design-build process using 80 ft prefabricated steel trusses (Figure 7). This alternative was substantially cheaper than a cast-in-place concrete bridge (McConahy 2004). The steel trusses were a U.S. Bridge product, and each truss was shipped in two 40-foot sections that were bolted together to form the final 80 ft length and then lifted by crane onto the abutments. The bridge was finished with a cast-in-place concrete deck. The entire project, including a soil investigation, design, and construction was 30 days. A detailed timeline of the construction was not provided. The Crosier Bottom bridge replacement highlights the benefits that prefabricated steel trusses can provide.

Rolled Wide-Flange Sections

Another type of prefabricated modular system consists of wide-flange beams topped with a composite concrete deck, as shown in Figure 8. One such system, originally patented under the

name “Inverset,” is now marketed by Fort Miller Co., Inc. (Schuylerville, NY) as Prefabricated Bridge Units (PBU). The composite system is similar to the proposed prefabricated system of the current study; however, the assemblies consist of two wide-flange sections, rather than steel trusses, topped with a concrete deck. Common or typical segment sizes are not provided on Fort Miller Company’s website.

Figure 7: Crosier Bottom Crossing (McConahy 2004)

Figure 8: Prefabricated wide flange beams topped with a composite concrete deck

The PBU/Inverset system uses an innovative fabrication method to obtain a more efficient composite cross-section. The segments are cast in an upside down orientation, as shown in Figure 9, in such a manner that upon subsequent erection, stresses in the composite elements are near zero in the bottom steel flange and are tensile in the top concrete flange (Klaiber and Wipf 2004). The result is a more efficient section for short to medium span bridges where stresses are dominated by live loading. The Fort Miller PBU’s have been used for spans up to 126 ft long

with skews that exceed 45 degrees (Fort Miller Company 2016). The span and width of the prefabricated segments for this specific case was not provided. Keys cast in the overhanging slabs are grouted together with non-shrink grout during construction. A similar joint system was investigated by Au et al. (2008) and is discussed in the following section of this report (Section 3.2, Concrete Decks).

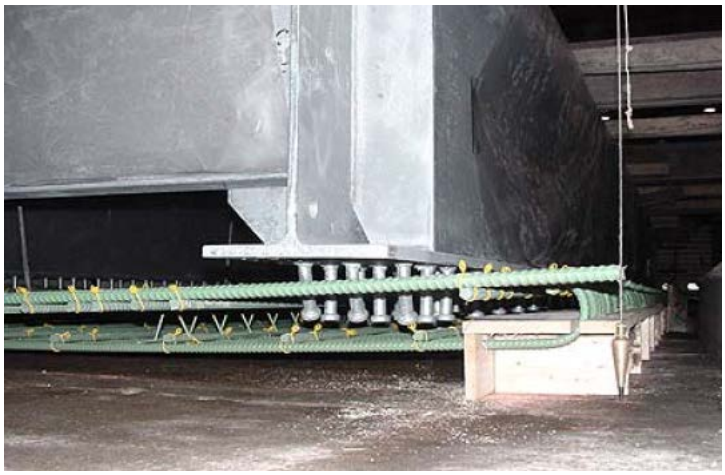

Figure 9: Prefabricated Bridge Units cast upside-down (Fort Miller Company 2016)

The New York State Department of Transportation used PBUs for the north and south bound bridges over the Mohawk River to minimize disruptions of the 110,000 vehicles that use these bridges each day. Two hundred and twenty-four prefabricated assemblies were used, including assemblies with monolithically cast traffic barriers, which is the same concept proposed by Allied Steel, Inc. for the system considered herein. High-performance concrete was used for the longitudinal and transverse joints between modular units. Installation of the prefabricated members and one of the joints is shown in Figure 10. More recent installations of Fort Miller PBU's are listed in Table 2.

Table 2: Recent Bridge Installations using Fort Miller PBU's (Fort Miller Company 2016).

Project	Date	No. of longitudinal segments	Length (ft)
Garden State Parkway, NJ	April, 2016	4	53
Route 28, MA	April, 2016	4	90

Figure 10: I-87 Prefabricated Bridge Unit Installation, I-87 bridge reconstruction (Fort Miller Company 2016)

Space Trusses

In an attempt to discover methods for reducing the weight of bridge superstructures for medium-span (50 to 150 ft) bridges, the French Highway Administration invested nearly 10 years of research before selecting a steel space truss design for demonstration deployment over the Roize River (Montens and O'Hagan 1992). The Roize Bridge was completed in 1990 and was the first structure to combine an innovative steel space truss with prestressed concrete deck panels. Similar to the proposed prefabricated system by Allied Steel, the Roize Bridge used modular building methods and composite action between the space truss and concrete deck, with the concrete deck effectively acting as the "top chord" of the truss system The bridge consisted of three spans; two 118 ft end sections and a 131 ft long center span. A typical cross-section and elevation are shown in Figure 11.

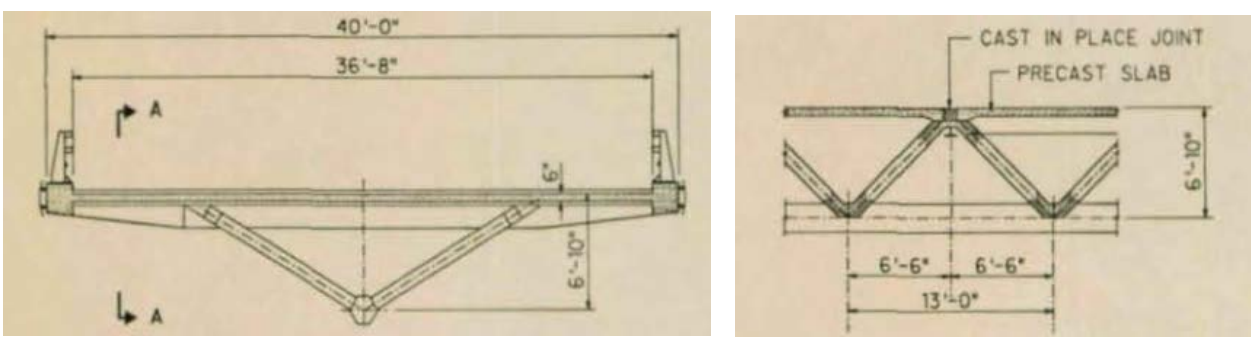

Figure 11: Roize Bridge cross section and elevation.

The bottom chord of the space truss is a hexagonal cross section made of two bent steel plates joined by a continuous longitudinal weld (Figure 12). Four diagonals are welded to stiffeners in the bottom chord, forming two inclined Warren-type trusses. The top of the diagonals is welded

to I-shaped transverse floor beams spaced at 13 ft. These 13 ft long tetrahedrons (4 diagonals, one bottom chord, one floor beam) were mass produced in the factory and assembled on-site. Rigid nodes were created along the bridge deck by extending the inclined truss members through the transverse floor beams and into the deck closure pour.

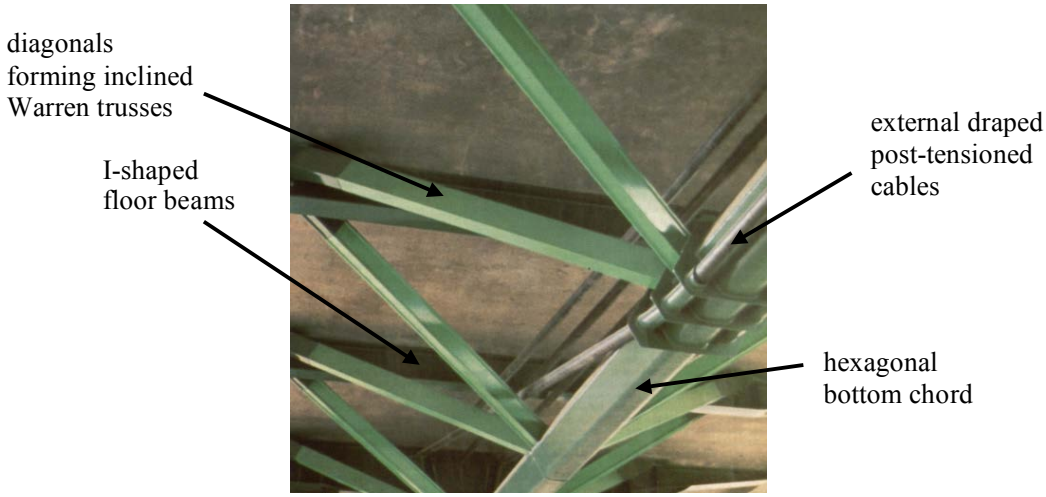

Figure 12: The space truss superstructure of the Roize Bridge (Muller 1993)

The precast concrete deck panels were 40 ft wide and 12 ft-4 in. in length. The panels were prestressed with 54 - 0.5 in. bonded strands in the longitudinal direction and post-tensioned with two 4-strand tendons located on either side of the floor beams after the closure joints were cast. After the bridge deck was assembled and cast, the superstructure assembly was continuously post-tensioned with five external draped 12-strand tendons (Figure 12). The concrete was a high-strength silica-fume with specified compression strength of 11.5 ksi. The combination of high-strength concrete and draped longitudinal post-tensioning helped reduce the long-term creep effects due to flexural loads (Montens and O'Hagan 1992).

The Lully Viaduct in Switzerland is a similar composite, prefabricated space truss bridge that was selected over two prestressed concrete box girder alternatives for its aesthetic qualities (Dauner, Oribasi et al. 1998). A typical cross-section and elevation of this bridge are shown in Figure 13. Average spans of the 1000 m bridge were 43 m, and the space truss depth was 2.9 m. Circular pipes were used for all truss members and resulted in complicated node geometry that created challenges with cutting and preparing the member ends for full penetration welds. Special equipment was used to cut the contact and welding surfaces. The prefabricated space trusses were erected in one-half span lengths (22 m). Longitudinal and transverse post-

tensioning was used after curing of the cast-in-place concrete deck. Photos of the completed structure are shown in Figure 14.

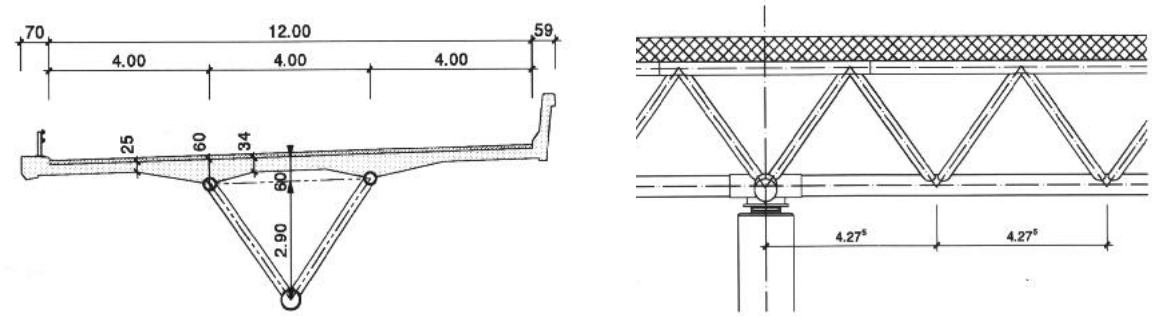

Figure 13: Lully Viaduct cross section and elevation, SI dimensions (Dauner, Oribasi et al. 1998)

Figure 14: Lully Viaduct space truss (Dauner, Oribasi et al. 1998).

Modular System Comparison

A detailed evaluation and assessment of six different modular bridge types was done by SDR Engineering Consultants (2005). Numerical ratings were assigned for each bridge in four categories of performance: aesthetics; design flexibility and service life; construction and erection; and future maintenance. The overall score was the summation of the ratings for each category and is shown in Table 3. On a scale of 0 – 100, scores ranged from a low value of 62 (temporary truss and permanent precast systems) to a high value of 87 (steel girders and concrete deck). The proposed prefabricated system being considered in this project has elements that are most similar to system 3, composite space truss, and system 4, steel girders and concrete deck, which ranked 1st and 3rd, respectively, for the bridge systems considered by SDR. Unlike the proposed system where the bridge is supported by the bottom chord, the under-slung truss

(system 5) evaluated by SDR was supported by the top chord and was not as modular as the other bridge types considered.

Table 3: Comparison of modular bridge systems, adapted from SDR Engineering Consultants (2005)

No.	Bridge Type	Unit Configurations and Aesthetics (30)	Design Flexibility and 75 Year Service Life (25)	Construction and Erection (25)	Future Maintenance (20)	Total Score (100)
1	Temporary truss and permanent precast systems	21	15	18	8	62
2	Railroad flatcar	24	18	24	14	80
3	Composite space truss	23	21	17	16	77
4	Steel girders and concrete deck	26	22	23	16	87
5	Under-slung truss	17	19	21	13	70
6	Cold-formed steel plate box	23	16	22	11	72

The highest total score for the performance criteria shown in Table 3 was a bridge with steel girders with precast composite concrete decks (No. 4). For this reason, SDR investigated a new modular precast concrete system which is shown in Figure 15. To reduce live load deflections, SDR's concept could also include continuity reinforcement at interior supports, as shown in Figure 16.

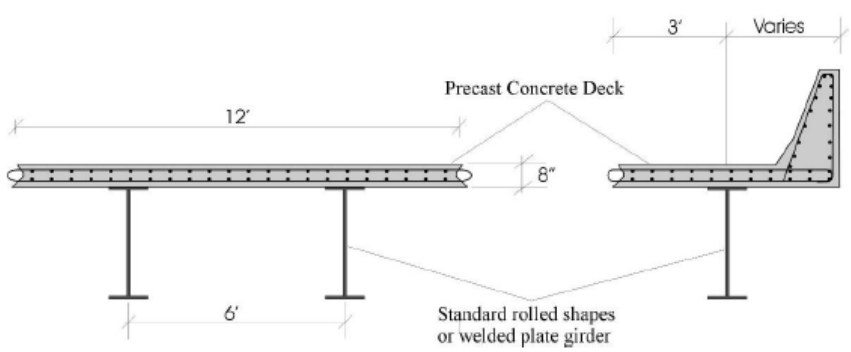

Figure 15: Modular precast concrete bridge concept (SDR Engineering Consultants 2005).

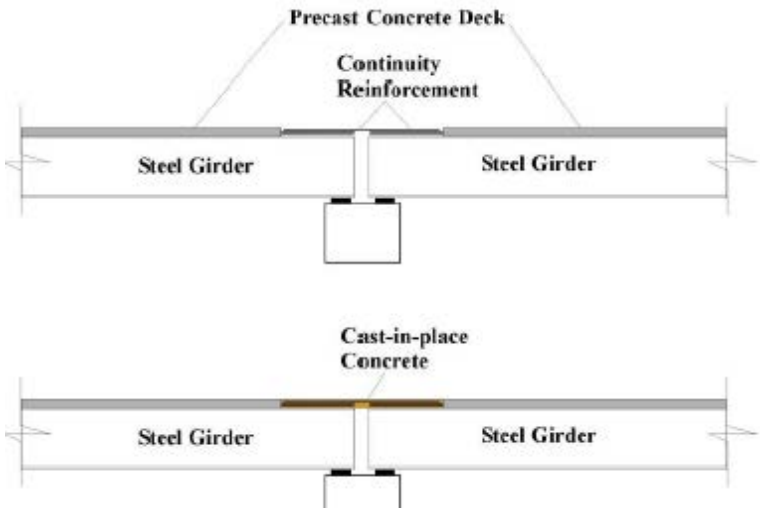

Figure 16: Continuous precast modular bridge concept (SDR Engineering Consultants 2005).

SDR also commented that the use of modular precast concrete systems can be limited by transportation constraints, a general weight limit for traditional transportation is 200 kips, and that panel widths wider than 8 ft require special permitting (SDR Engineering Consultants 2005).

The third highest total score for the bridge types shown in Table 3 is a composite space truss. These systems have high strength and stiffness-to-weight ratios, however their lack of standardized members and details leads to higher initial costs (SDR Engineering Consultants 2005). Despite their high ranking, this option was not selected for further study by SDR. The research team contacted several bridge manufacturers to determine if fabrication of a space truss with existing equipment and fabrication techniques could be accomplished. All fabricators interviewed expressed reservations on the practicality of such a system.

The predominant discouragement to the widespread, continued use of modular bridges in the United States, despite growing prevalence in Europe and Asia, is the fatigue-sensitive nature of some of the details (SDR Engineering Consultants 2005). In addition, more complete, modular bridge systems such as those by Bailey Bridges, U.S. Bridge, Acrow, and Fort Miller may not be cost-effective due to the proprietary nature of their designs.

3.2. Concrete Decks

Several different concrete deck systems have been investigated for use in accelerated bridge construction. The systems were designed with the intent of reducing the time needed to

construct a deck while maintaining equal or better performance and durability than conventionally constructed decks. These systems include precast, cast-in-place, and post-tensioned concrete decks.

Precast Concrete

Advantages of precast concrete decks include quick installation and increased quality control with higher strength and performance concrete than typically is used in cast-in-place concrete decks. A concern with precast concrete decks is the durability and structural integrity of the joints between elements (Culmo 2011). The Ministry of Transportation in Ontario, Canada performed structural testing on reduced scale precast panel joints (Au, Lam et al. 2008) to investigate the performance of different joint configurations. The prefabricated bridge systems were selected to meet the requirements of one, two, or three-span bridges with spans ranging from 66 to 164 ft.

Two types of precast panel joints were investigated and are shown in Figure 17. System A consisted of a concrete deck precast on a single steel girder forming a T-shaped prefabricated member, similar to the proposed system by Allied Steel. Closure strips for this deck system are located between the girder supports. As an alternative to offset the potentially heavy and difficult-to-transport prefabricated T-shaped members, System B consisted of separate precast concrete deck panels that were attached to the prestressed or steel girders after they were placed at the bridge site. The panel closure strips were located over the girder.

Due to practical limitations (size effects, design criteria, laboratory restrictions, and material availability), the bridge specimens were constructed with one-third scale dimensions in the vertical direction, one-seventh scale in the longitudinal direction, and one-quarter scale in the transverse direction. The authors performed an analysis of both the prototype and scaled bridge models and determined the behavior of the two systems were similar.

Two different joint configurations were constructed for each system. Specimen 1 and 2 for System A used different arrangements of top and bottom reinforcement, which are shown in Figure 18. Specimens 3 and 4 for System B utilized L-shaped and U-shaped reinforcement within the closure strip over the steel girders, which also are shown Figure 18.

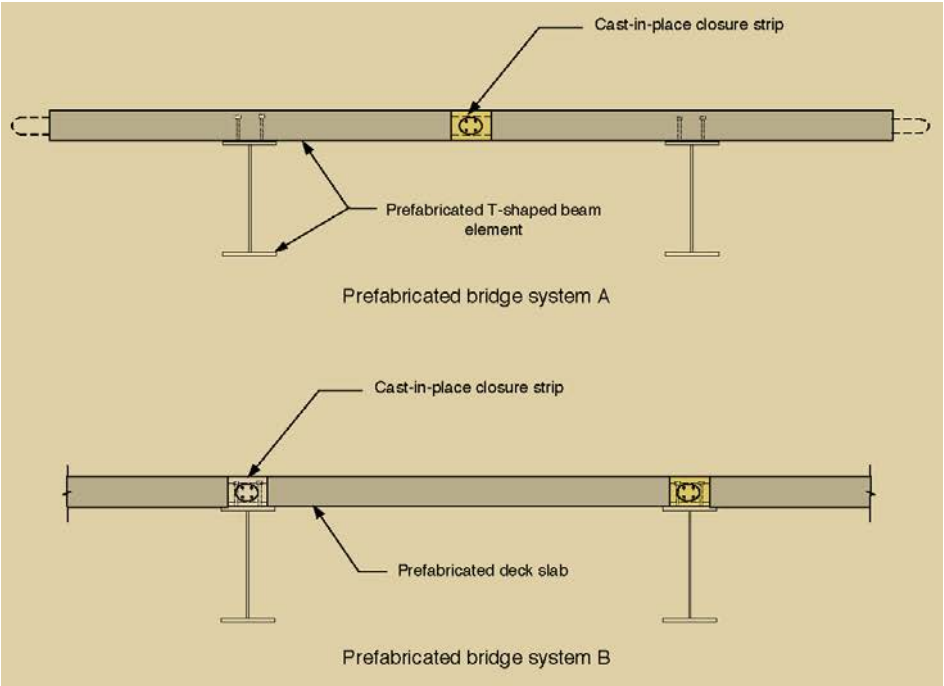

Figure 17: Typical Transverse Sections of Prefabricated Bridge System Models (Au, Lam et al. 2008)

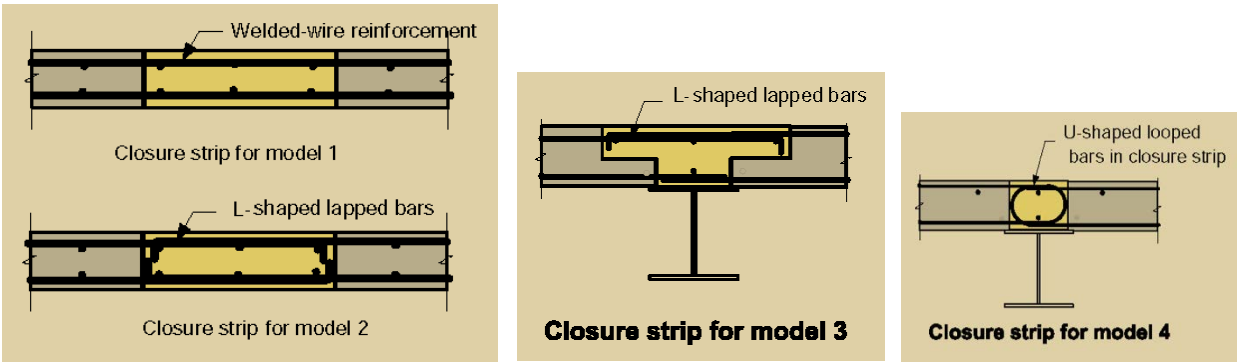

Figure 18: Closure strip details for four configurations considered (Au, Lam et al. 2008)

A total of 7 million load cycles were applied to Specimens 1 through 3. Specimen 4 was subjected to a total of 16 million load cycles. To investigate the condition of the specimens during the cyclic tests, a static load test was performed after every 1 million cycles of loading. After all cyclic load tests, punching load tests were performed to determine the post-elastic behavior of the specimens by applying a concentrated load over an area that represented a single wheel. Several loading and unloading cycles were completed before the maximum failure load was reached.

The experimental program concluded that 1) long-term performance of the longitudinal joints was acceptable, 2) higher transverse deck stiffness was achieved when the longitudinal joints

were located over the beams, and 3) the smooth bars used in the closure strip in Specimen 2 had a lower initial stiffness.

Successful or unsuccessful applications of this type of structural system were not found in the literature, however a similar bridge system was recently constructed over Maxwell Coulee, 22 miles East of Jordan, MT. The bridge was 38'-4" wide by 100' long and construction was completed in 2013. The bridge is currently being evaluated and a final report on the bridge performance is due in 2017 (Montana Department of Transportation 2012).

Post-Tensioned Concrete

Transverse post-tensioning in concrete deck slabs is a common method for connecting precast concrete segments and could be used with the bridge system proposed by Allied Steel. The tendons could be threaded through ducts in the prefabricated slab and grouted after post-tensioning. Research has shown that transverse post-tensioning improves the performance of the shear key joint and the durability of the bridge decks by reducing the number and width of cracks (Poston 1984, Grace, Jensen et al. 2012). Satisfactory performance of transverse post-tensioned joints was observed in an experimental program conducted on a precast concrete deck panel system subjected to static and fatigue loading (Yamane, Tadros et al. 1995). This deck system was designed and developed specifically for rapid construction and rehabilitation.

One of the challenges with post-tensioning deck panels assembled on site are construction tolerances. In a case study in Michigan (Attanayake, Abudayyeh et al. 2014), post-tensioning ducts were misaligned because the skew of the bridge was not correctly considered. When placing the precast panels on the prestressed bridge girders, some of the shear connector pockets did not provide enough tolerance for the twist (sweep) of the beams. This particular case study demonstrated the importance of providing adequate tolerances on precast members for efficient construction.

Cast-in-place concrete

Full-depth cast-in-place concrete decks are not a viable option for accelerated bridge construction due to the formwork and shoring required during construction. A partial-depth cast-in-place system that includes a precast or pre-manufactured form system could mitigate some of these construction issues, and result in a cast-in-place top surface that minimizes joints on the

surface of the deck. Such a concept was studied by SDR (2005), where a cold-formed steel plate is welded to steel girders to form a metal stay-in-place form as shown in Figure 19. The metal form acts as tension reinforcement for the composite system. A welded wire mesh reinforcing cage is welded to the steel plate at the factory and acts as top reinforcement for the slab.

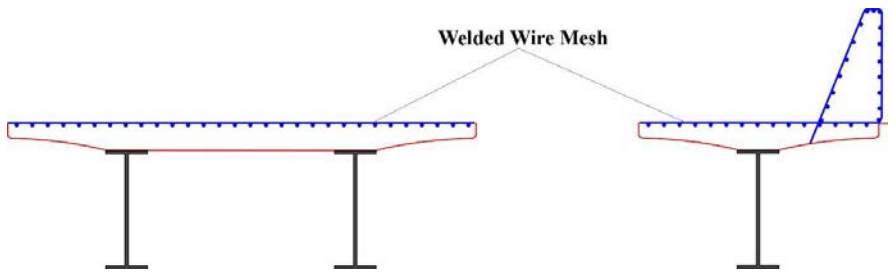

Figure 19: Proposed cross sections for a cast-in-place concrete deck without formwork (SDR Engineering Consultants 2005).

On-site, the form and reinforcement assemblies are bolted together in the longitudinal and transverse directions. A mat of steel mesh is then placed over the top of the joint to splice the reinforcement meshes together. This new concept was selected by SDR for further study because like the modular precast system described above, it also falls into the steel girder and concrete deck bridge type that had the highest total score in their evaluation and assessment (System No. 4 in Table 3).

3.3. Welded Connections Subjected to Fatigue

Fatigue in steel and notably in welded steel connections is always a concern in cyclic loading environments, which is an obvious consideration with the composite steel truss/concrete deck modular system being studied in this project. The welded connection types included in the proposed prefabricated system are longitudinal welds in a knife-plate configuration and transverse welds made at the ends of the vertical and diagonal web members. The research summarized below identifies recent articles related to connection geometry and weld configuration that can be applied to the investigation of the proposed system.

<u>Connection Geometry</u>

Extensive testing was carried out at the University of Texas at Austin with regard to fatigue strength of welded connections used in steel bridges (Battistini, Wang et al. 2014). The experimental program investigated the fatigue performance of five cross-frame connection

configurations by measuring stiffness, ultimate strength, and fatigue resistance. The project objectives were to determine the connection type that was most economical to fabricate and construct, while still providing adequate strength and stiffness for the connecting members.

The five connections tested (Figure 20) were the (a) T-stem, (b) knife plate without a stress relief hole, (c) knife plate with a stress relief hole, (d) double angle, and (e) single angle. A stress relief hole was included in three of the six knife plate specimens to mitigate stress concentrations at the forward edge of the fillet weld. The T-stem variations tested did not reach the minimum AASHTO connection fatigue requirement (E') and are not included in this review. In addition, because the back-to-back single-angle connection performance was similar to the double angle, the remainder of this section will focus on the two knife plate connections (b, c) and the double-angle connection (d) shown in Figure 20.

T-Stem (a) | Knife plate (KP) (b) | KP with stress relief (c) | Double Angle (d) | Single Angle (e)

Figure 20: Connection configurations tested (Battistini, Wang et al. 2014)

Many of the results presented were related to the specific behavior of different brace configurations, such as X-, Z-, and K-frames. Improvements to fatigue behavior were observed in some of these frame configurations when thicker center gusset plates were used and when an additional transverse weld was included on the reverse side of the angle. The following specific conclusions were made related to the fatigue tests and welded connections:

- The T-stem connections (square, round, and diamond) had poor fatigue performance, likely due to a small local eccentricity that existed in the geometry.

- The knife plate connection performed adequately in fatigue, with 5 of the 6 specimens achieving E classification; the stress relief hole further increased the connection fatigue life.
- The double angles achieved connection E' classification. The fatigue cracking initiated in the angle when the member stress range was larger than the gusset plate stress range.
- The measured fatigue life of the connections tested in this study correlated well with the tabulated fatigue categories provided by AASHTO for common connection geometries.

Weld Configuration

The influence of weld geometry was investigated by McDonald and Frank (2009) to determine if balanced welds had an influence on the fatigue strength of single-angle connections. This study attempted to estimate fatigue performance based on the geometry and the angle of connection. The specimens consisted of single-angle members attached to a plate on each end as shown in Figure 21.

Figure 21: Angle-plate cross-frame specimens (McDonald and Frank 2009).

A total of 25 specimens and six weld configurations were tested, with a stress range from 8-12 ksi in fatigue by applying axial load to the two end plates. Both eccentric and balanced welds with short and long angle legs welded to the plate were included. The balanced welds were detailed to meet the requirements of AASHTO (2009). The conclusions of the study noted the balanced welds consistently performed better than specimens with equal length welds; however, due to the fact that angle and plate length varied, it was inconclusive as to whether the balancing of welds or frame geometry led to improved fatigue performance.

A parametric study using finite element analysis (FEA) was also performed by McDonald and Frank (2009) to investigate the factors affecting the stress concentrations in the steel plate

connected to the single angles. The results of the parametric study suggested that the factor with the highest influence on the stress concentration was the length of the outstanding leg of the angle. Battistini, Wang et al. (2014) focused their parametric analysis on the relationship of the axial stiffness reduction factor for a single angle cross frame. They concluded that the length of the diagonal member of a frame affects the stiffness as well, with a longer diagonal increasing the magnitude of the reduction factor.

3.4. Full-Scale Experimental Studies

Full-scale tests on bridge systems with elements similar to those being investigated here were identified in the literature and provide information relevant to the strength and analytical modeling aspects of steel trusses.

Research by King, Wu et al. (2013) included laboratory load tests on two full-scale, Bailey bridge segments. Two 10-ft panel segments (Figure 2) were pin-connected to form 20 ft spans for each specimen. A vertical load was applied through a thick plate on both sides of the top chord at the central nodes. The test specimen and experimental setup are shown in Figure 22. Lateral buckling was observed in the top chord members adjacent to the central node at a load of 500 kN and 507 kN for the two specimens.

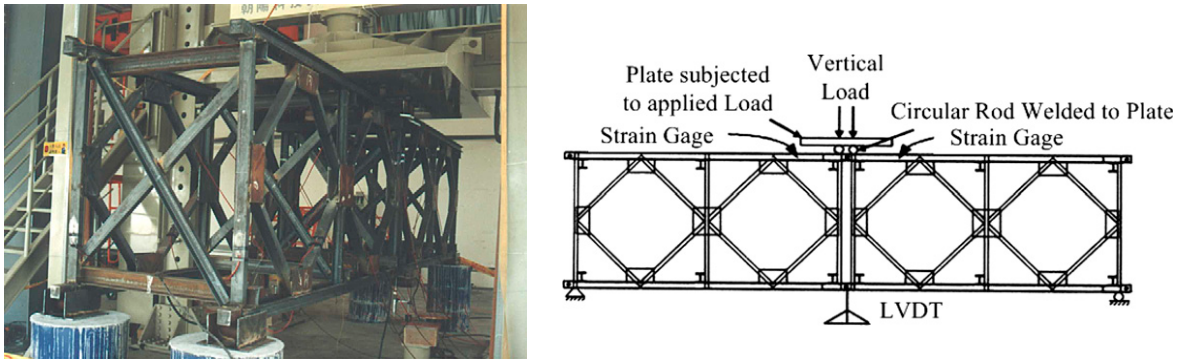

Figure 22: Full-scale Bailey Bridge Model (King, Wu et al. 2013)

A comparison was made with the AASHTO specifications (2009) for members that failed by lateral buckling. The ratio of tested capacity (P_{test}) to the calculated nominal strength (P_n) ranged from 0.81 to 1.1 and showed that AASHTO generally recommends conservative design strengths for members in compression (King, Wu et al. 2013). The top chord compression members for the proposed prefabricated truss will be braced by the composite concrete deck, however the

conservative strength predictions by AASHTO are relevant to the diagonal members in compression.

Based on test results of the two specimens and isolated tests of the individual connections, elastic and nonlinear analyses were performed. From the elastic analysis it was found that the effect of partial fixity of the connections was not significant due to the connections remaining elastic during the test. Results from the 2D nonlinear analysis compared well with the measured load displacement response, but the predicted capacity was higher because the model could not capture the out-of-plane stability behavior that was observed in the test (King, Wu et al. 2013).

A second full-scale experimental investigation was performed on the Hillsville Truss bridge over the New River in Virginia (Hickey, Roberts-Wollmann et al. 2009) shown in Figure 23. The objective of the study was to calibrate an analytical model that was used to estimate loads that could cause the bridge to collapse. This study was part of a larger endeavor to better understand the collapse of the I-35W Bridge in Minneapolis, Minnesota by conducting field tests and detailed structural analysis on a similar bridge. The Hillsville Truss was similar to other mid-twentieth century steel truss bridges that used riveted gusset plate connections between members.

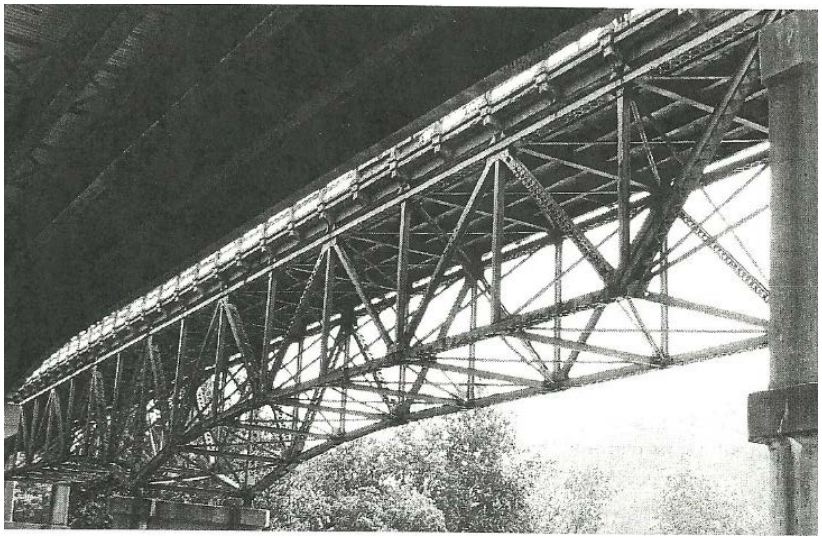

Figure 23: Hillsville Truss (Hickey, Roberts-Wollmann et al. 2009)

Loaded trucks with known dimensions and weights were parked along the bridge, and strain gauges were strategically placed to record various member strains. The field test results were used to calibrate a 2-dimensional linear elastic steel truss bridge model, after which a failure

analysis was conducted. The truss model with simple connections at the joints did not correlate with the data, so the model was updated to a frame model where bending moments could be included. Adding the transverse floor beams and stringer elements to the frame model resulted in calculated results that most closely correlated with the collected data (Hickey, Roberts-Wollmann et al. 2009). The authors concluded that the models provided evidence that moment was being transferred through the connections of the truss members, and therefore the connections should be evaluated to include flexural stresses.

An important observation from the analytical modeling of the Bailey Bridge segments and Hillsville Truss is that different conclusions were made related to the restraint provided by the connections. The welded connections for the Bailey Bridge did not provide significant restraint to member rotations and the results suggested the connections could be modeled as pinned. The pinned connections assumed in the riveted gusset plate connections of the Hillsville Truss, however, did not compare well with the measured data and additional connection restraint was necessary. These are important observations for the analytical modeling task of the current research project and will be included in the analysis of the proposed prefabricated system.

4. Summary and Future Work

The prototype bridge structure proposed by Allied Steel, Inc. consists of a prefabricated welded steel truss with a composite concrete deck, cast-in-place at the fabrication facility. These modular elements are then transported to the site, where they are lifted on to the foundation. This specific bridge and prefabricated construction technique is not well represented in the literature, and thus there is a need to identify potential bridge spans and traffic volumes where the proposed system is viable and economical.

The specific information that will be carried forward to the analytical evaluation of Task 2 of this project is summarized below.

- The most common application for modular prefabricated steel truss systems has been for temporary bridge crossings. Two cases of permanent welded truss bridge replacement projects were identified in the literature for short spans with low-volume traffic. These projects were significantly more economical than traditional solutions. With this in mind, the

analytical evaluation will determine appropriate span and traffic conditions, truss configurations, and member sizes for the proposed system.

- Fort Miller Company's Prefabricated Bridge Unit with rolled wide-flange girders cast compositely with a concrete deck in an upside-down orientation has been successfully used in several permanent installations. This casting method and the resulting stress distribution in the concrete deck and steel truss will be investigated. A primary design concern will be the welded steel truss connections. Experimental data for a connection configuration similar to one of the proposed welded connections matched fatigue detail Category E assigned by AASHTO. In addition, fatigue performance was improved when a stress relief hole was included and when balanced welds were used. With these observations in mind, the analytical evaluation will investigate different weld configurations, truss member cross sections, and bridge geometries to determine if stresses in the welded connections can meet design requirements.

- Full-scale experimental investigations of two steel truss bridges resulted in different conclusions related to the degree of rotational restraint provided by the truss connections. Different joint restraints will be evaluated to determine their effect on the analytical results.

In addition to the specific items identified from the literature review listed above, the following items will be included in the analytical evaluation.

- The use of single and two-truss assemblies as shown in Figure 24 will be further investigated to determine which system is more efficient. Member sizes and the assembly geometry will be selected based on the controlling stresses in the steel truss and consideration of length, width, and weight limitations for transportation.

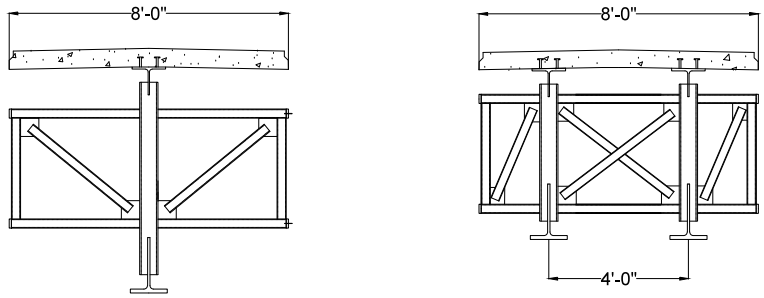

(a) single-truss (b) two-truss

Figure 24: Typical cross-sections – single and two-truss prefabricated steel truss bridge configurations

- Several investigations have been performed on details of longitudinal and transverse joints between prefabricated elements. This research has resulted in recommendations on joint configurations by the American Concrete Institute (Austin, Guthrie et al. 2001) and AASHTO (Culmo 2009). Based on these recommendations, appropriate joint details will be implemented and their influence on the analytical models will be included.

- Published literature on the connection details of prefabricated steel assemblies to form longer spans is limited. These connections will be included in the analytical model and designed for both in-service loads and construction loads.

- Prefabrication tolerances were identified as a potential cause for construction delays. The final assembly of the prefabricated components will be considered during fabrication and construction to minimize corrective actions required in the field.

References

American Association of State Highway and Transportation Officials (2009). AASHTO LRFD Bridge Design Specifications. Washington DC.

Attanayake, U., et al. (2014). "First Full-Depth Deck-Panel Accelerated Bridge Construction Project in Michigan: Constructability Challenges and Lessons Learned." Journal of Performance of Constructed Facilities **28**(1): 128-135.

Au, A., et al. (2008). "Investigation of prefabricated bridge systems using reduced-scale models." PCI Journal **53**(6).

Austin, R., et al. (2001). Emulating Cast-in-Place Detailing in Precast Concrete Structures. Farmington Hills, MI**:** 16.

Battistini, A., et al. (2014). Improved Cross Frame Details for Steel Bridges. Austin, TX, University of Texas at Austin.

Culmo, M. P. (2009). Connection details for prefabricated bridge elements and systems. Washington DC, Federal Highway Administration.

Culmo, M. P. (2011). Accelerated Bridge Construction-Experience in Design, Fabrication and Erection of Prefabricated Bridge Elements and Systems. Washington DC, Federal Highway Administration.

Dauner, H. G., et al. (1998). "The Lully Viaduct, a composite bridge with steel tube truss." Journal of constructional steel research **46**: 67-68.

Fort Miller Company, I. (2016). "Prefabricated Bridge Units." 2016, from http://www.fortmiller.com/portfolio-item/prefabricated-bridge-units/.

Grace, N. F., et al. (2012). "Transverse post-tensioning arrangement for side-by-side box-beam bridges." PCI Journal **57**(2).

Heine, M. (1990). "Welded Truss Bridges Rural Road Remedy." Roads & Bridges **28**(11).

Hickey, L., et al. (2009). Live load test and failure analysis for the steel deck truss bridge over the New River in Virginia. Richmond, VA, Virginia Department of Transportation.

King, W. S., et al. (2013). "Laboratory Load Tests and Analysis of Bailey Bridge Segments." Journal of Bridge Engineering: 12.

Klaiber, F. W. and T. J. Wipf (2004). Alternative Solutions to Meet the Service Needs of Low Volume Bridges in Iowa. Aimes, IA, University of Iowa.

McConahy, J. (2004). "County Saves Bridge Costs with Steel." Better Roads **75**(5): 58-59.

McDonald, G. S. and K. H. Frank (2009). The Fatigue Performance of Angle Cross-Frame Members in Bridges, University of Texas at Austin.

Montana Department of Transportation (2012). "Allied Modular Steel Beam Bridge With Precast Concrete Deck." Retrieved February, 2016, from http://www.mdt.mt.gov/research/projects/maxwell.shtml.

Montens, S. and D. O'Hagan (1992). "Bringing Bridge Design into the Next Century: The Construction of the Roize Bridge." Modern Steel Construction **32**(9).

Muller, J. M. (1993). "Bridge to the Future." Civil Engineering **63**(1): 40-43.

Poston, R. (1984). Improving durability of bridge decks by transverse prestressing. Department of Civil Engineering, University of Texas at Austin. **Ph.D.:** 637.

SDR Engineering Consultants, I. (2005). Prefabricated Steel Bridge Systems. Washington, DC, Federal Highway Administration.

State of Montana (2016). Retrieved February, 2016, from http://mt.gov/.

U.S. Bridge (2015). "We Get it Done Right." Retrieved September, 2015, from http://www.usbridge.com/whyusbridge.

Yamane, T., et al. (1995). Full-Depth Precast Prestressed Concrete Bridge Deck System, University of Nebraska, Lincoln.