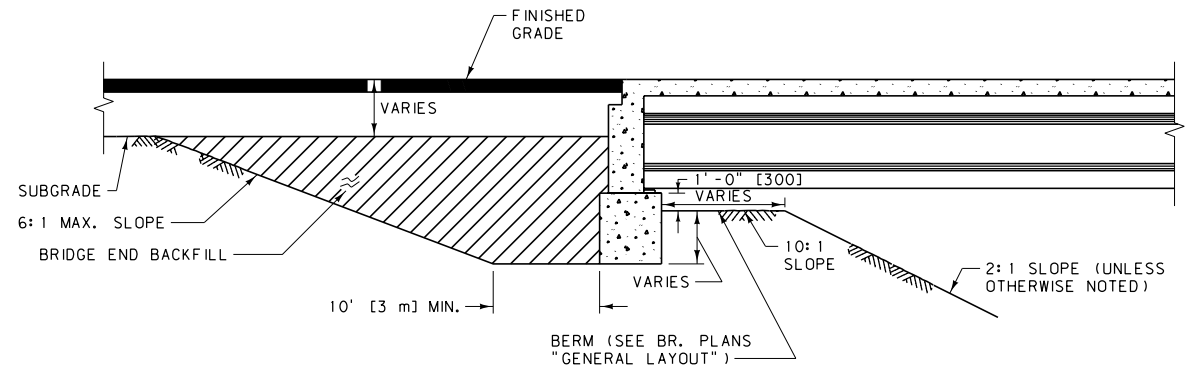

SECTION A-A

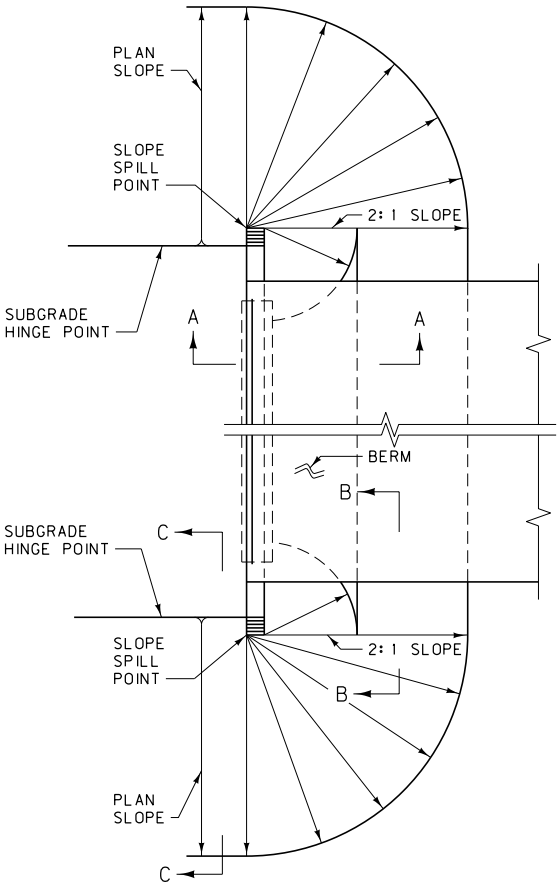

PLAN VIEW

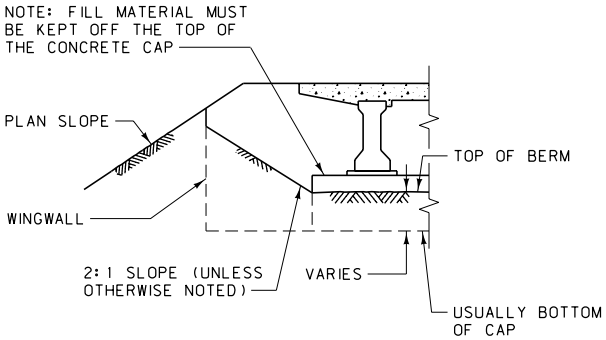

SECTION B-B

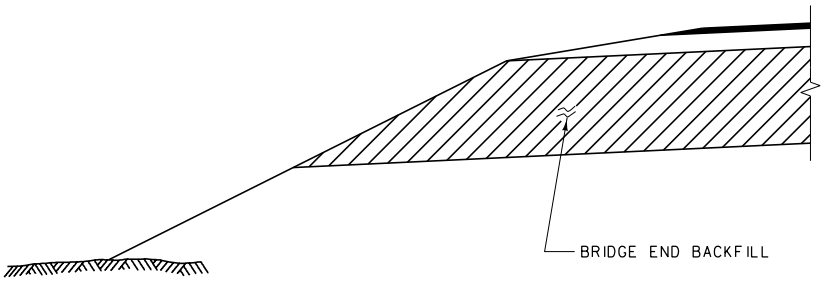

SECTION C-C

UNITS SHOWN IN BRACKETS [] ARE METRIC AND ARE IN MILLIMETERS (mm) UNLESS OTHER UNITS ARE SHOWN.

DETAILED DRAWING	
REFERENCE STANDARD SPEC. SECTION 301, 701	DWG. NO. 301-00
ROADWAY EMBANKMENT AT BRIDGE END	
EFFECTIVE: SEPTEMBER 2014	
MDT MONTANA DEPARTMENT OF TRANSPORTATION	