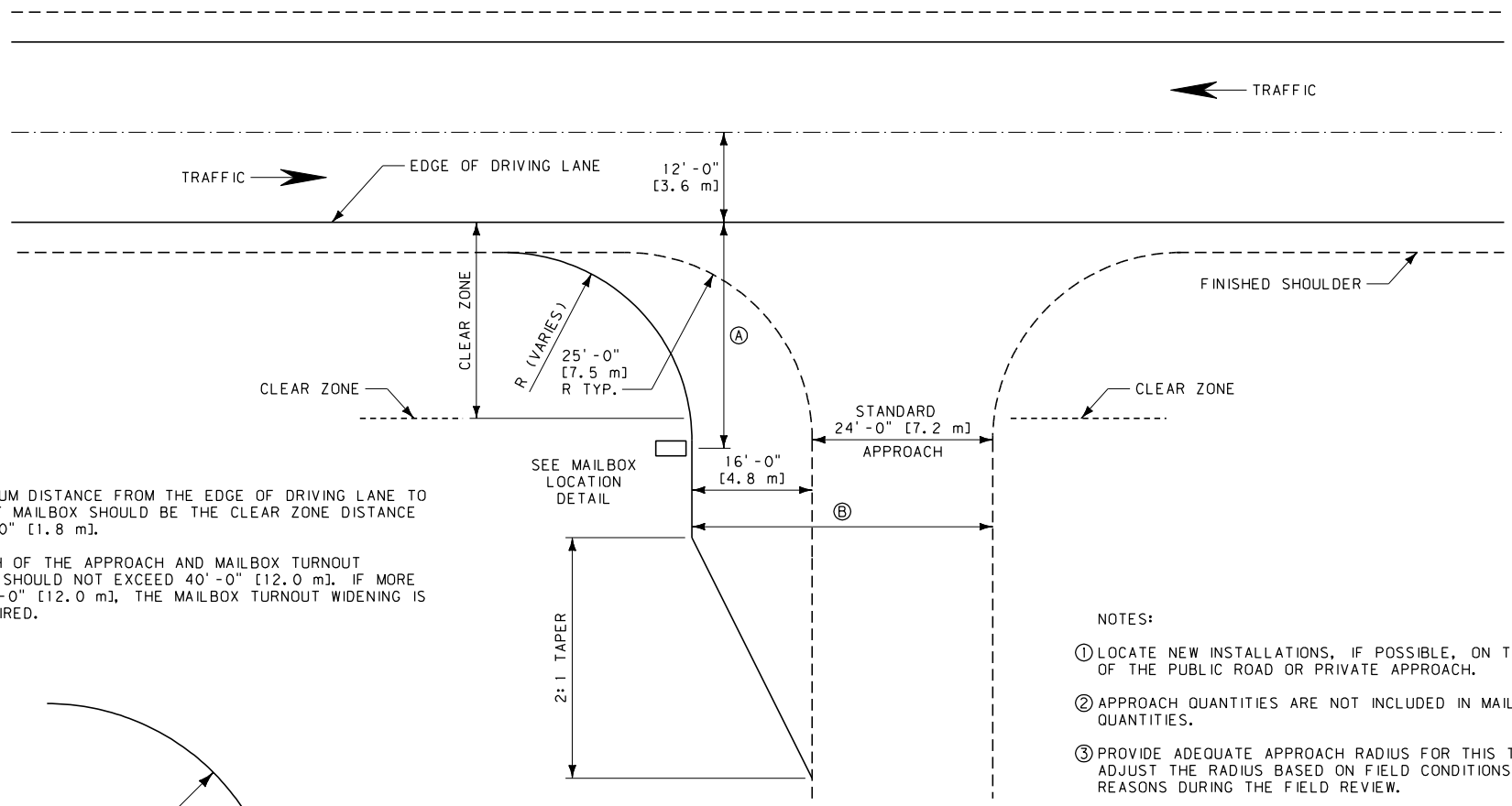

NOTES:

Ⓐ THE MINIMUM DISTANCE FROM THE EDGE OF DRIVING LANE TO THE FIRST MAILBOX SHOULD BE THE CLEAR ZONE DISTANCE PLUS 6'-0" [1.8 m].

Ⓑ THE WIDTH OF THE APPROACH AND MAILBOX TURNOUT COMBINED SHOULD NOT EXCEED 40'-0" [12.0 m]. IF MORE THAN 40'-0" [12.0 m], THE MAILBOX TURNOUT WIDENING IS NOT REQUIRED.

NOTES:

① LOCATE NEW INSTALLATIONS, IF POSSIBLE, ON THE RIGHT SIDE OF THE PUBLIC ROAD OR PRIVATE APPROACH.

② APPROACH QUANTITIES ARE NOT INCLUDED IN MAILBOX TURNOUT QUANTITIES.

③ PROVIDE ADEQUATE APPROACH RADIUS FOR THIS TURNOUT. ADJUST THE RADIUS BASED ON FIELD CONDITIONS AND DOCUMENT REASONS DURING THE FIELD REVIEW.

④ SEE DETAILED DRAWING NUMBER 203-05 FOR ADDITIONAL GUIDANCE.

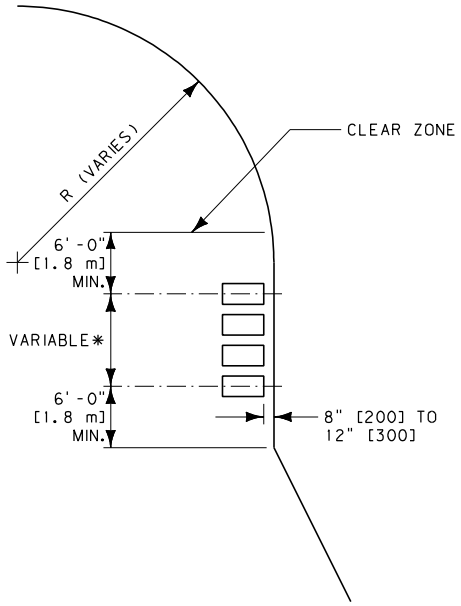

MAILBOX LOCATION DETAIL

NOTE:

* THE MINIMUM SPACING BETWEEN MAILBOXES IS EQUAL TO THREE-FOURTHS OF THEIR HEIGHT ABOVE THE GROUND. SEE DTL. DWG. NO. 623-20 AND 623-25 FOR MAILBOX DETAILS.

UNITS SHOWN IN BRACKETS [] ARE METRIC AND ARE IN MILLIMETERS (mm) UNLESS OTHER UNITS ARE SHOWN.

DETAILED DRAWING	
REFERENCE STANDARD SPEC. SECTION 623	DWG. NO. 623-10
APPROACH MAILBOX TURNOUT	
EFFECTIVE: MAY 2011	

MDT MONTANA DEPARTMENT OF TRANSPORTATION

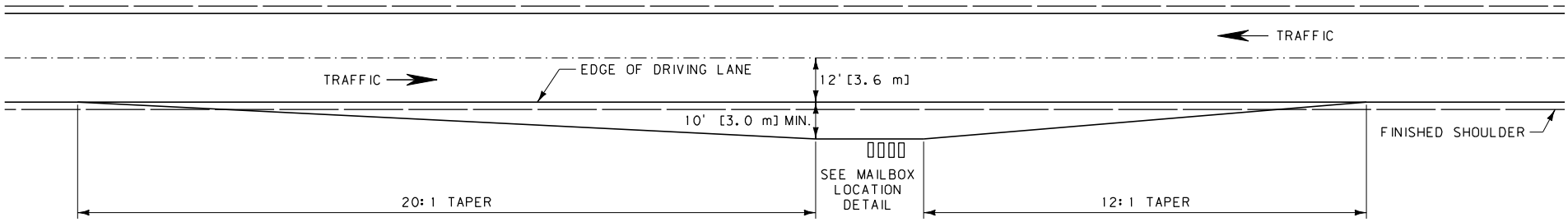

TURNOUT WITHOUT APPROACH

NOTE:
ACTUAL SIZE AND LOCATION TO BE DETERMINED BY THE PROJECT MANAGER.

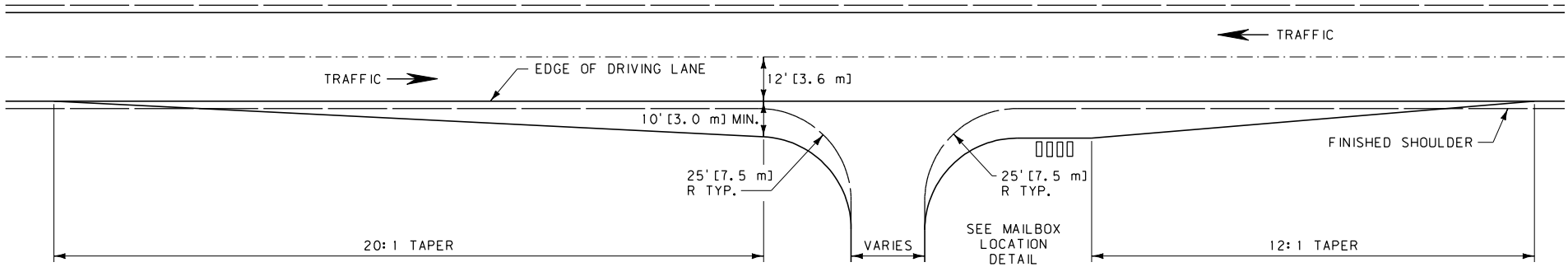

TURNOUT WITH APPROACH

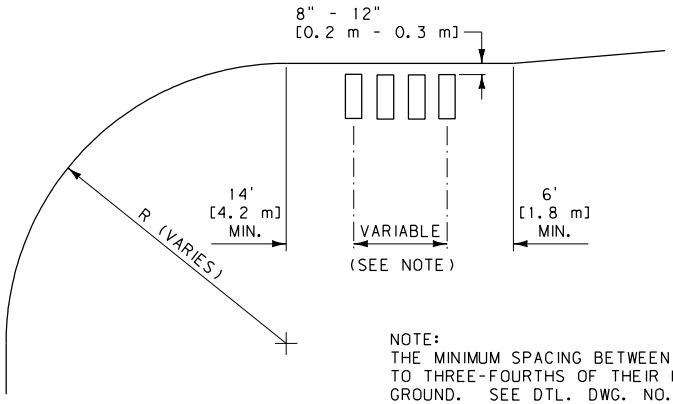

NOTE:
THE MINIMUM SPACING BETWEEN MAILBOXES IS EQUAL TO THREE-FOURTHS OF THEIR HEIGHT ABOVE THE GROUND. SEE DTL. DWG. NO. 623-20 AND 623-25 FOR MAILBOX DETAILS.

MAILBOX LOCATION DETAIL

NOTES:

1. LOCATE NEW INSTALLATIONS, IF POSSIBLE, ON THE FAR RIGHT SIDE OF AN INTERSECTION WITH A PUBLIC ROAD OR PRIVATE DRIVEWAY.
2. APPROACH QUANTITIES ARE NOT INCLUDED IN TURNOUT QUANTITIES.

UNITS SHOWN IN BRACKETS [] ARE METRIC AND ARE IN MILLIMETERS (mm) UNLESS OTHER UNITS ARE SHOWN.

DETAILED DRAWING	
REFERENCE STANDARD SPEC. SECTION 623	DWG. NO. 623-15
MAILBOX TURNOUT	
EFFECTIVE: MAY 2011	

MDT MONTANA DEPARTMENT OF TRANSPORTATION

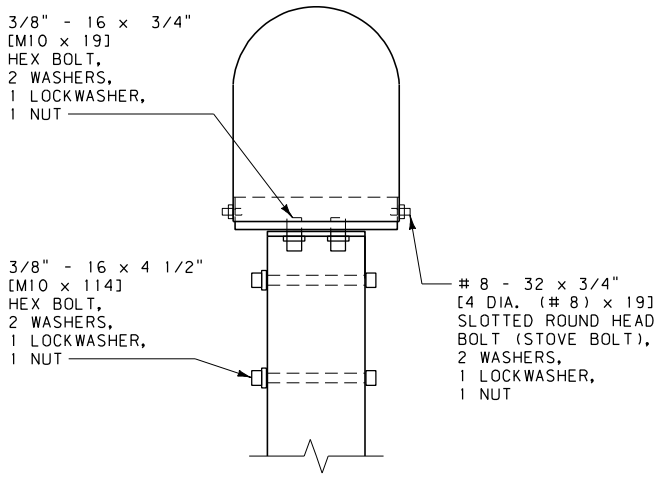

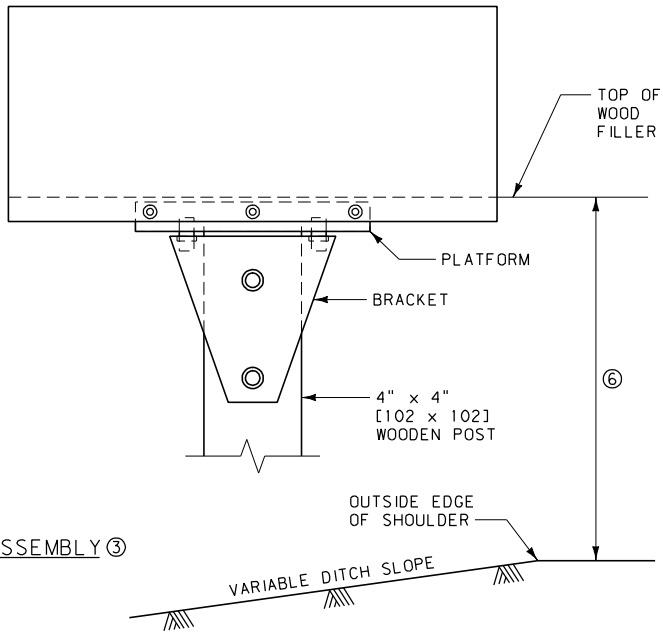

SINGLE MAILBOX ASSEMBLY ③

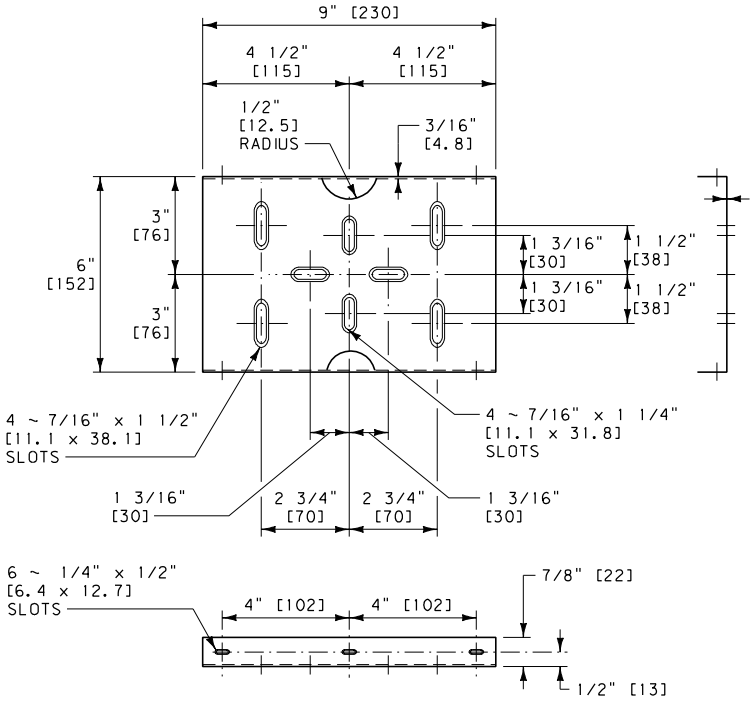

PLATFORM

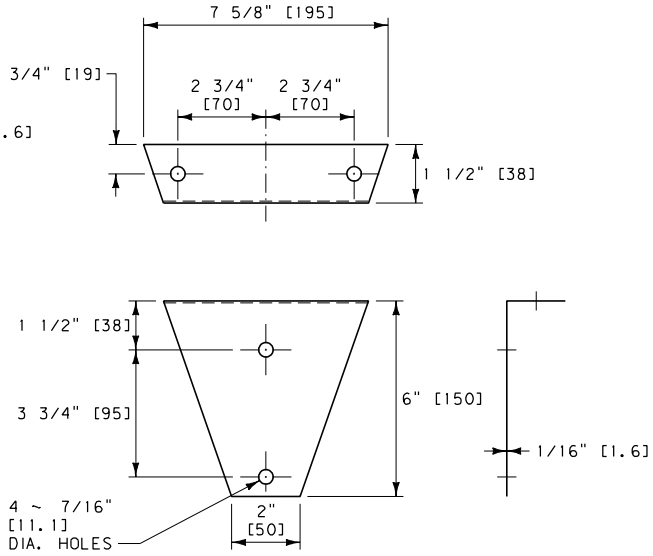

BRACKET

NOTES:

① GALVANIZE ALL MATERIALS MEETING SECTION 711.

② STAKE MAILBOX LOCATIONS BEFORE INSTALLATION FOR PROPER HEIGHT AND DISTANCE FROM THE ROADWAY. ONCE STAKED, NOTIFY THE PROJECT MANAGER AND THE POST OFFICE. THE PROJECT MANAGER AND POSTMASTER/MAILCARRIER ARE ALLOWED 48 HOURS TO REVIEW AND MODIFY THE STAKED LOCATIONS PRIOR TO FINAL INSTALLATION.

③ OTHER NCHRP 350 OR MASH CRASH TESTED MAILBOX SUPPORTS AND ASSEMBLIES MAY ALSO BE USED.

④ LOCATE THE MAILBOX 8" [0.2 m] TO 12" [0.3 m] OUTSIDE THE EDGE OF THE SHOULDER OR 6" [0.15 m] TO 12" [0.31 m] FROM THE FACE OF CURB.

⑤ FOR MULTIPLE MAILBOX INSTALLATIONS, SPACE THE MAILBOX SUPPORTS A MINIMUM DISTANCE OF 42" [1.05 m] APART.

⑥ FOR RURAL LOCATIONS USE A 38" TO 42" [965 TO 1065] MOUNTING HEIGHT. FOR URBAN LOCATIONS USE A 45" TO 48" [1145 TO 1220] MOUNTING HEIGHT.

⑦ SEE "A GUIDE TO MAILBOX SAFETY IN MONTANA" FOR ADDITIONAL INFORMATION.

UNITS SHOWN IN BRACKETS [] ARE METRIC AND ARE IN MILLIMETERS (mm) UNLESS OTHER UNITS ARE SHOWN.

DETAILED DRAWING	
REFERENCE STANDARD SPEC. SECTION 623	DWG. NO. 623-20
MAILBOX DETAIL	
EFFECTIVE: MAY 2011	

MDT MONTANA DEPARTMENT OF TRANSPORTATION

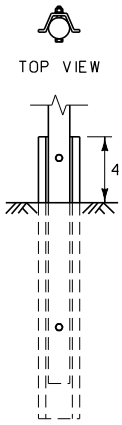

PIPE/POST CONNECTION

ROADWAY VIEW

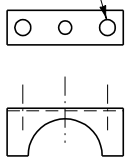

TAIL PIPE CLAMP

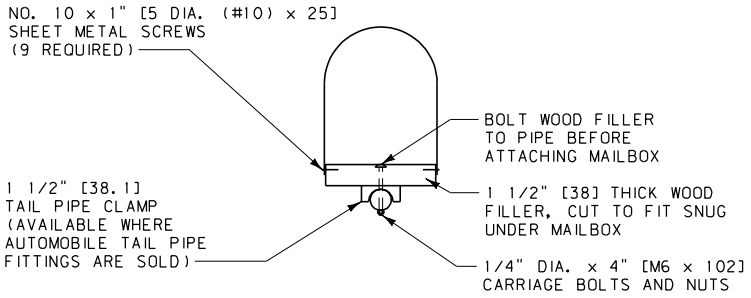

SECTION A-A

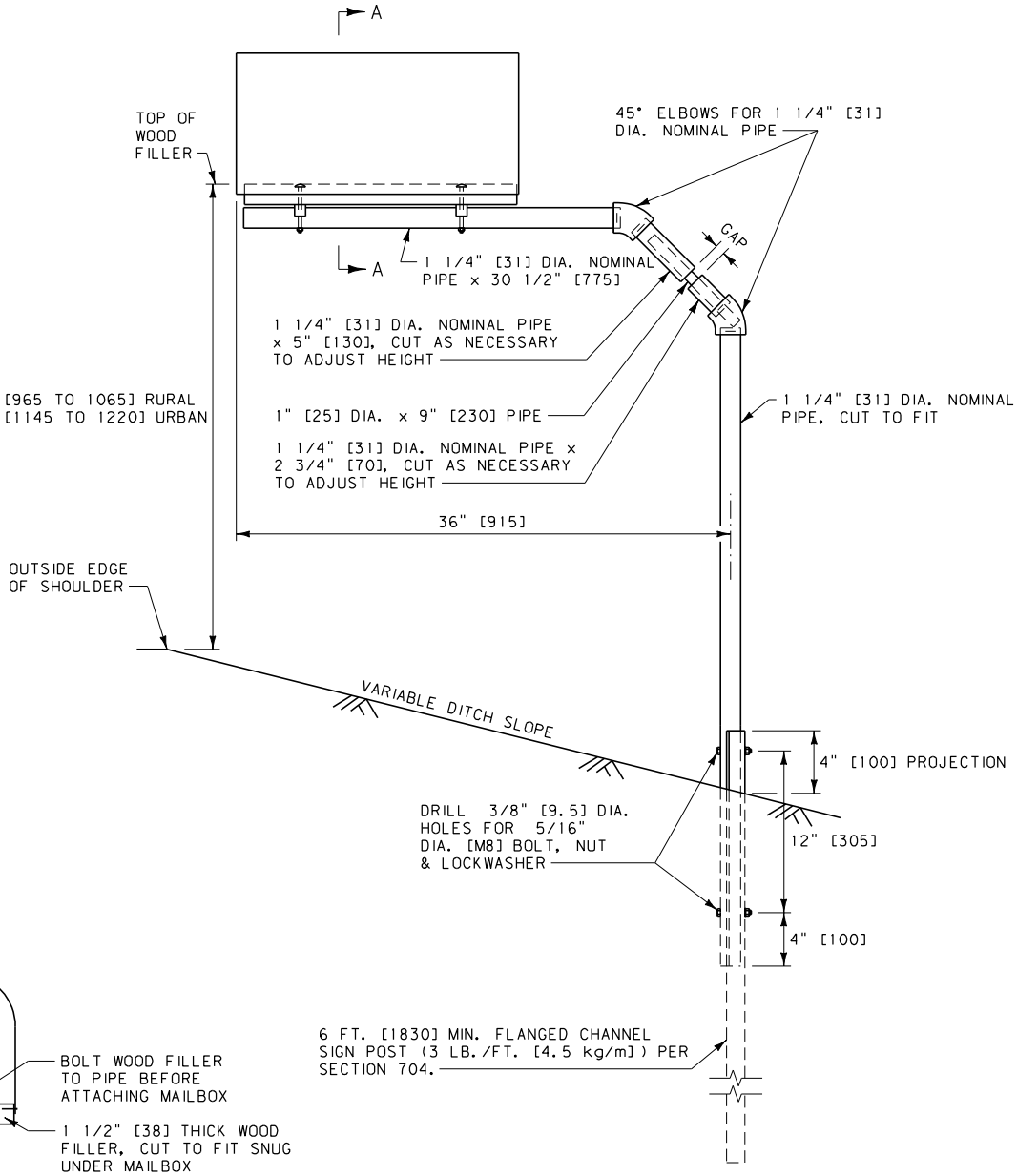

MAILBOX SUPPORT

STEEL PIPE WITH FITTINGS AND STEEL FENCE POST

NOTES:

1. GALVANIZE ALL MATERIALS MEETING SECTION 711.
2. STAKE MAILBOX LOCATIONS BEFORE INSTALLATION FOR PROPER HEIGHT AND DISTANCE FROM THE ROADWAY. ONCE STAKED, NOTIFY THE PROJECT MANAGER AND THE POST OFFICE. THE PROJECT MANAGER AND POSTMASTER/MAIL CARRIER ARE ALLOWED 48 HOURS TO REVIEW AND MODIFY THE STAKED LOCATIONS PRIOR TO FINAL INSTALLATION.
3. OTHER NCHRP 350 OR MASH CRASH TESTED MAILBOX SUPPORTS AND ASSEMBLIES MAY ALSO BE USED.
4. LOCATE THE MAILBOX 8" TO 12" [0.2 TO 0.3 METERS] OUTSIDE THE EDGE OF THE SHOULDER OR 6" TO 12" [0.15 TO 0.3 METERS] FROM THE FACE OF CURB.
5. SEE "A GUIDE TO MAILBOX SAFETY IN MONTANA", FOR ADDITIONAL INFORMATION.

UNITS SHOWN IN BRACKETS [] ARE METRIC AND ARE IN MILLIMETERS (mm) UNLESS OTHER UNITS ARE SHOWN.

DETAILED DRAWING	
REFERENCE STANDARD SPEC. SECTION 623	DWG. NO. 623-25
OPTIONAL MAILBOX DETAIL	
EFFECTIVE: MAY 2011	

MDT MONTANA DEPARTMENT OF TRANSPORTATION

ELEVATION VIEW

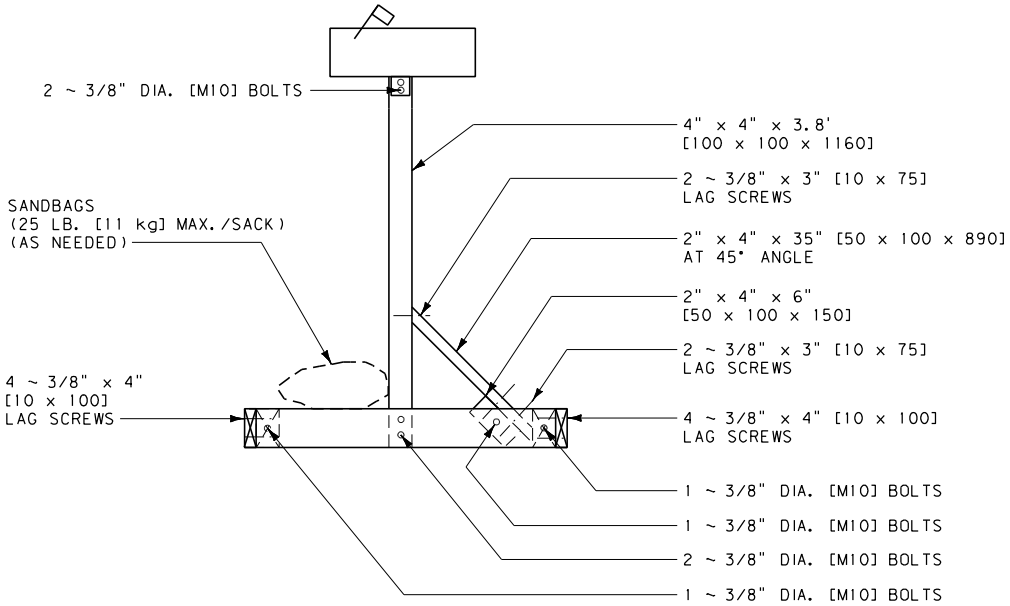

FRONT VIEW

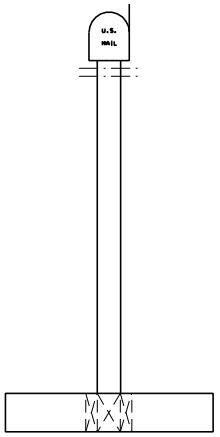

NOTES:

1. THIS MOUNTING DEVICE IS INTENDED FOR USE IN CONSTRUCTION ZONES.
2. BOLT PLACEMENT IS SYMMETRICAL THROUGHOUT MOUNTING BRACKET.
3. ALL BOLT CONNECTIONS ARE FINISHED WITH A WASHER AND NUT.
4. FOR THE POST USE EITHER DOUGLAS FIR OR HEM FIR, WHICH IS SURFACED FOUR SIDES (S4S) AND FREE OF HEART CENTER (FOHC).

PLAN VIEW

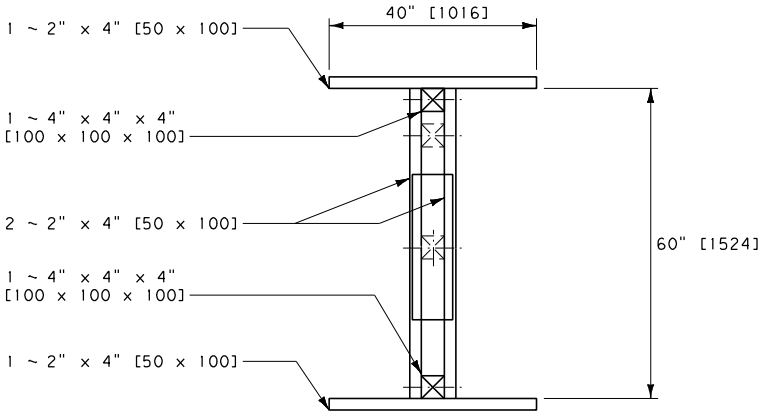

UNITS SHOWN IN BRACKETS [] ARE METRIC AND ARE IN MILLIMETERS (mm) UNLESS OTHER UNITS ARE SHOWN.

DETAILED DRAWING	
REFERENCE STANDARD SPEC. SECTION 623	DWG. NO. 623-30
TEMPORARY MAILBOX SUPPORT	
EFFECTIVE: MAY 2011	
MDT MONTANA DEPARTMENT OF TRANSPORTATION	

MOUNTING SYSTEM

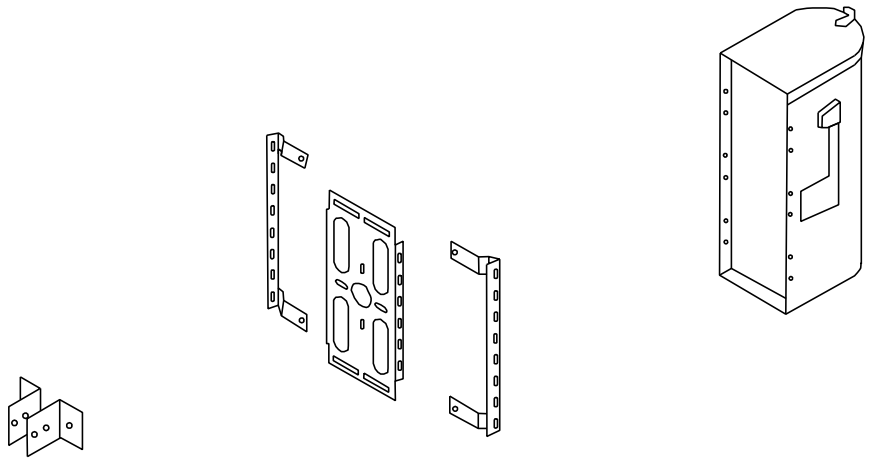

NOTES:

1. THIS MOUNTING DEVICE IS INTENDED FOR USE IN CONSTRUCTION ZONES.
2. BOLT PLACEMENT IS SYMMETRICAL THROUGHOUT MOUNTING BRACKET.
3. ALL BOLT CONNECTIONS ARE FINISHED WITH A WASHER AND NUT.

ATTACHMENT DETAILS

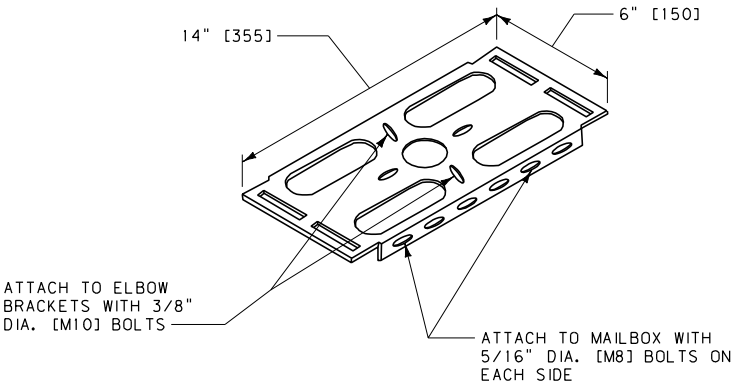

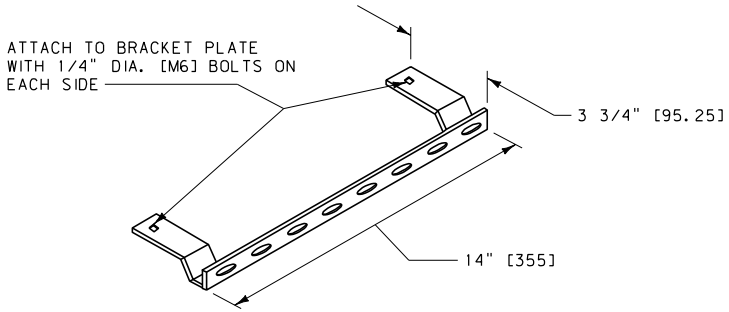

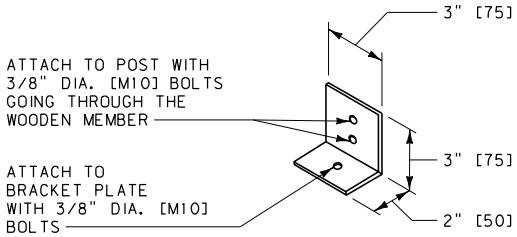

UNITS SHOWN IN BRACKETS [] ARE METRIC AND ARE IN MILLIMETERS (mm) UNLESS OTHER UNITS ARE SHOWN.

DETAILED DRAWING	
REFERENCE STANDARD SPEC. SECTION 623	DWG. NO. 623-35
TEMPORARY MAILBOX SUPPORT BRACKET DETAILS	
EFFECTIVE: MAY 2011	

MDT MONTANA DEPARTMENT OF TRANSPORTATION