ROUND PIPE

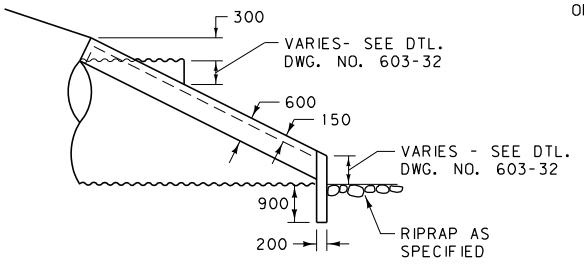

SIDE ELEVATION

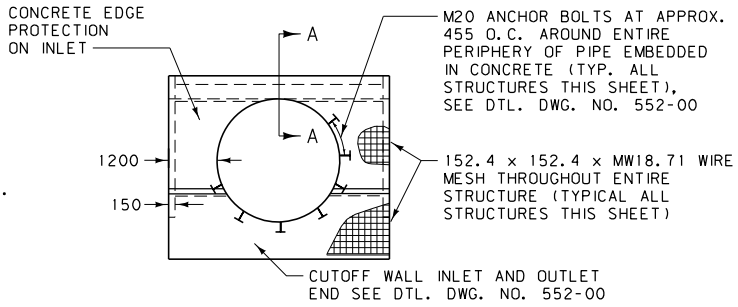

FRONT ELEVATION

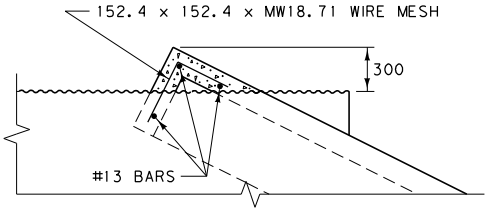

SECTION A-A

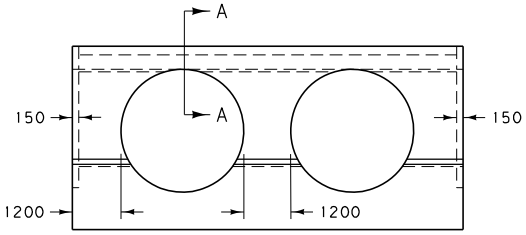

FRONT ELEVATION MULTIPLE PIPES

ARCH PIPE

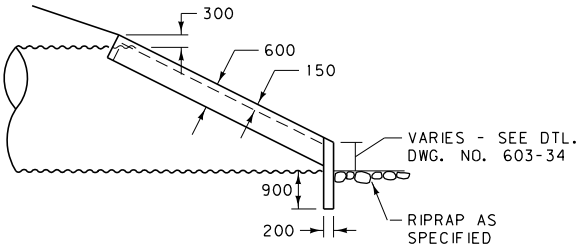

SIDE ELEVATION

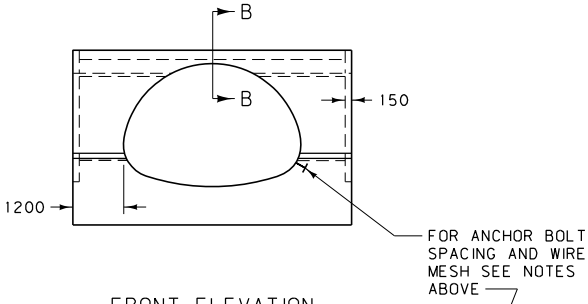

FRONT ELEVATION

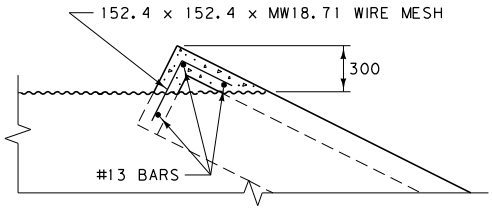

SECTION B-B

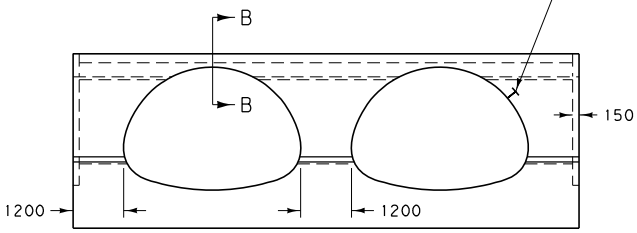

FRONT ELEVATION MULTIPLE PIPES

NOTE:
ALL CONCRETE IS CLASS "DD" OR EQUAL.

ALL DIMENSIONS ARE MILLIMETERS (mm) UNLESS OTHERWISE NOTED.

DETAILED DRAWING	
REFERENCE STANDARD SPEC. SECTION 613	DWG. NO. 613-06
CONCRETE EDGE PROTECTION FOR METAL CULVERTS	
--REVISED-- January 2008	EFFECTIVE: FEBRUARY 2005
	MDT serving you with pride — MONTANA DEPARTMENT OF TRANSPORTATION

ROUND PIPE

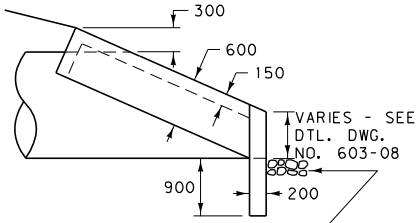

SIDE ELEVATION

RIPRAP AS SPECIFIED

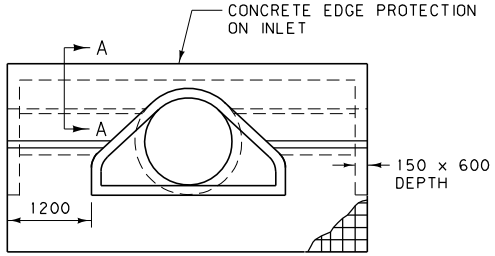

FRONT ELEVATION

ARCH PIPE

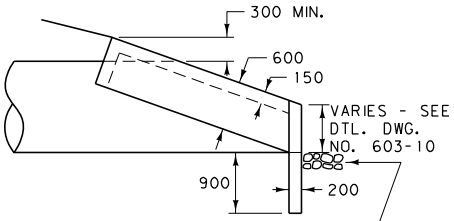

SIDE ELEVATION

RIPRAP AS SPECIFIED

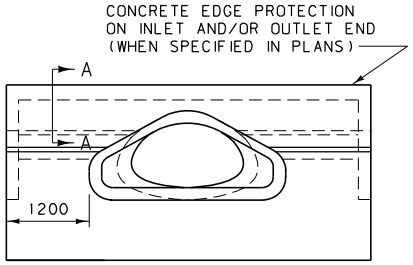

FRONT ELEVATION

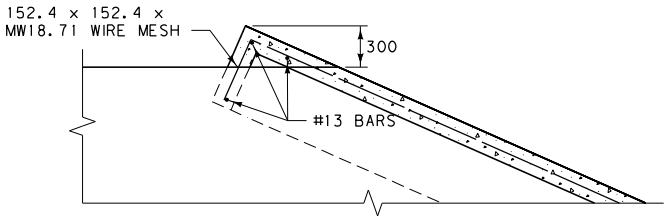

SECTION A-A

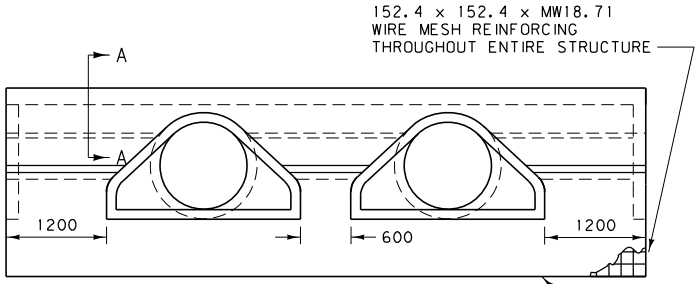

FRONT ELEVATION MULTIPLE PIPES

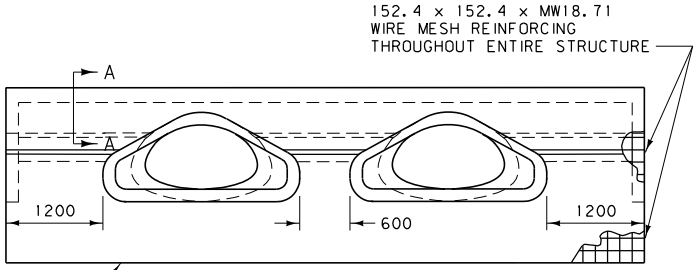

FRONT ELEVATION MULTIPLE PIPES

CUTOFF WALL INLET AND OUTLET END SEE DTL. DWG. NO. 552-00 (WHEN SPECIFIED IN PLANS)

ALL DIMENSIONS ARE MILLIMETERS (mm) UNLESS OTHERWISE NOTED.

NOTES:
ALL CONCRETE IS CLASS "DD" OR EQUAL.

DETAILED DRAWING	
REFERENCE STANDARD SPEC. SECTION 603, 613	DWG. NO. 613-08
CONCRETE EDGE PROTECTION FOR CONCRETE CULVERTS	
--REVISED-- January 2008	EFFECTIVE: FEBRUARY 2005
	MDT serving you with pride — MONTANA DEPARTMENT OF TRANSPORTATION

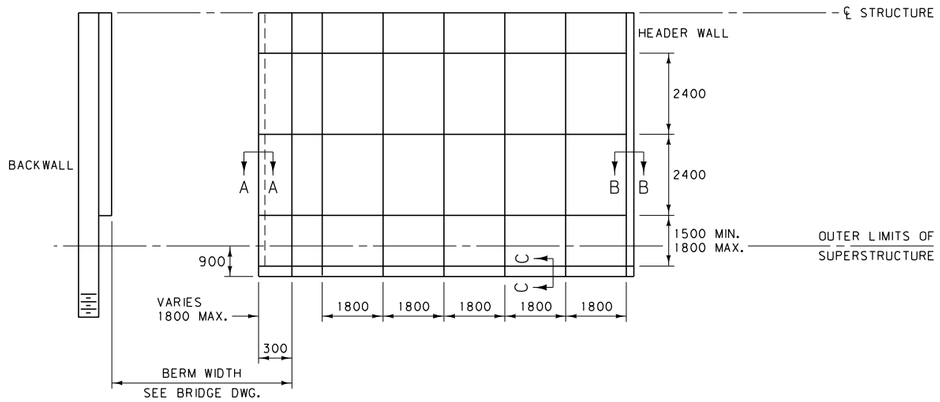

STRAIGHT STRUCTURE

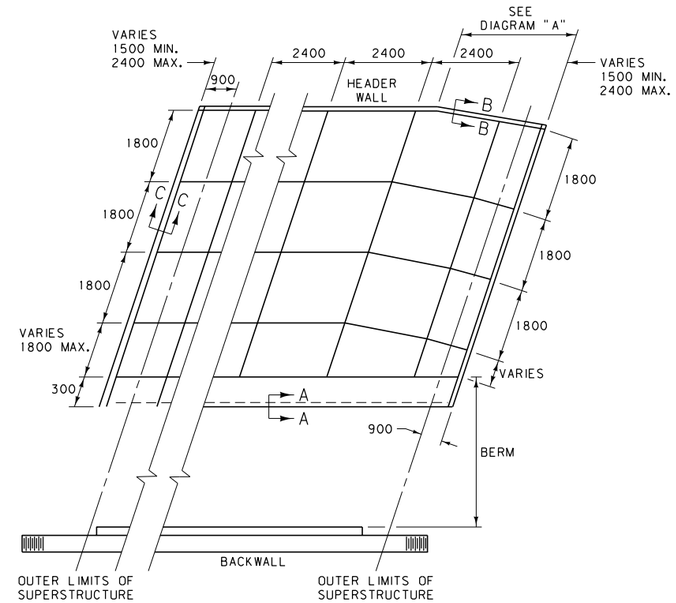

SKEWED STRUCTURE

CAST-IN-PLACE CONCRETE:

LOCATE JOINTS AS INDICATED ON THE PLANS. IF CONSTRUCTION IS STOPPED FOR OVER TWO HOURS, CREATE A CONSTRUCTION JOINT. USE CLASS "D" CONCRETE FOR ALL CAST-IN-PLACE CONCRETE.

USE AN APPROVED 13 mm EXPANSION JOINT FILLER WHENEVER THE CAST-IN-PLACE CONCRETE ABUTS AGAINST ANY PART OF THE BRIDGE STRUCTURE.

CLEAR THE EMBANKMENT SLOPE OF ALL BRUSH, DEBRIS AND RUBBLE. A CUSHION IS NOT REQUIRED FOR GRAVEL EMBANKMENT SLOPES. FINISH ALL SLOPES TO A REASONABLY UNIFORM SURFACE OR TO THE SLOPE INDICATED IN THE BRIDGE PLANS. COMPACT ALL LOOSE MATERIAL TO THE SATISFACTION OF THE ENGINEER. LEAVE THE ADJACENT SLOPE AREA IN A SMOOTH, UNIFORM CONDITION.

REINFORCING STEEL:

(MAY USE EITHER ALTERNATE LISTED BELOW)

1. #10 BARS AT 250 O.C. (HORIZONTAL AND VERTICAL SPACING) MIN. COVER OF 50 mm
2. 152.4 x 152.4 x MW18.71 WIRE MESH

300 mm OVERLAP REQUIRED AT CONSTRUCTION JOINTS FOR REINFORCING STEEL AND WIRE MESH.

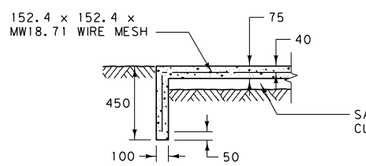

SECTION A-A

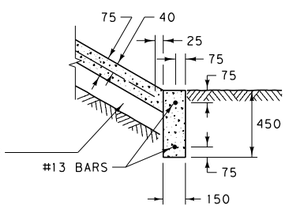

SECTION B-B
HEADER WALL

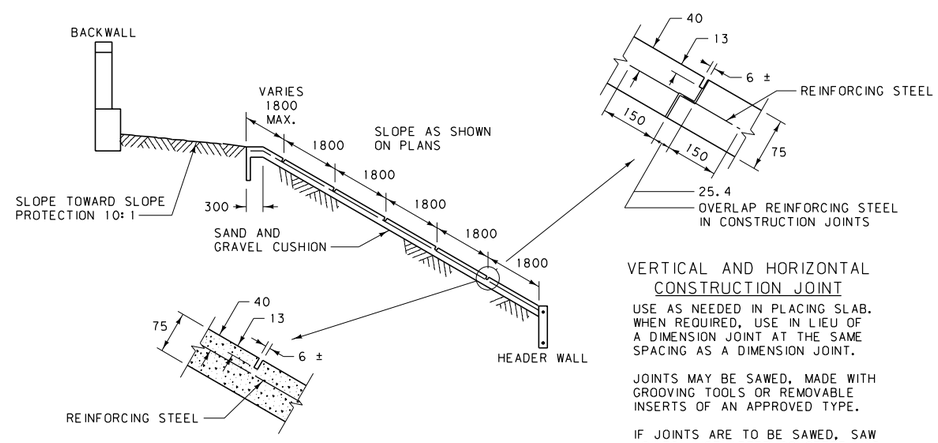

VERTICAL AND HORIZONTAL
CONSTRUCTION JOINT

USE AS NEEDED IN PLACING SLAB. WHEN REQUIRED, USE IN LIEU OF A DIMENSION JOINT AT THE SAME SPACING AS A DIMENSION JOINT.

JOINTS MAY BE SAWED, MADE WITH GROOVING TOOLS OR REMOVABLE INSERTS OF AN APPROVED TYPE.

IF JOINTS ARE TO BE SAWED, SAW JOINTS JUST AFTER CONCRETE HAS SET BUT BEFORE UNCONTROLLED CRACKING OCCURS.

VERTICAL AND HORIZONTAL
DIMENSION JOINT

1800 mm VERTICAL SPACING OR AS NOTED. 2400 mm HORIZONTAL SPACING OR AS NOTED. JOINTS MAY BE SAWED, MADE WITH GROOVING TOOLS OR REMOVABLE INSERTS OF AN APPROVED TYPE.

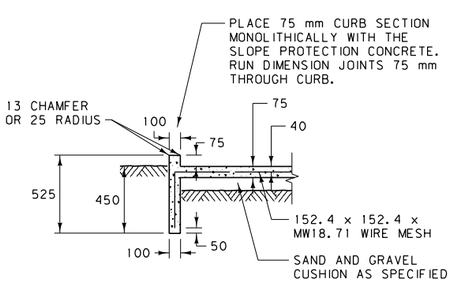

SECTION C-C

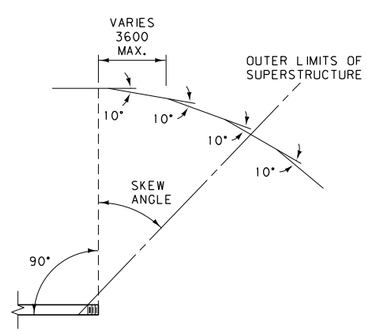

DIAGRAM "A"

ALL DIMENSIONS ARE MILLIMETERS (mm) UNLESS OTHERWISE NOTED.

DETAILED DRAWING	
REFERENCE STANDARD SPEC. SECTION 613	DWG. NO. 613-10
CONCRETE SLOPE PROTECTION	
--REVISED-- January 2008	EFFECTIVE: FEBRUARY 2005
	MDT serving you with pride — MONTANA DEPARTMENT OF TRANSPORTATION

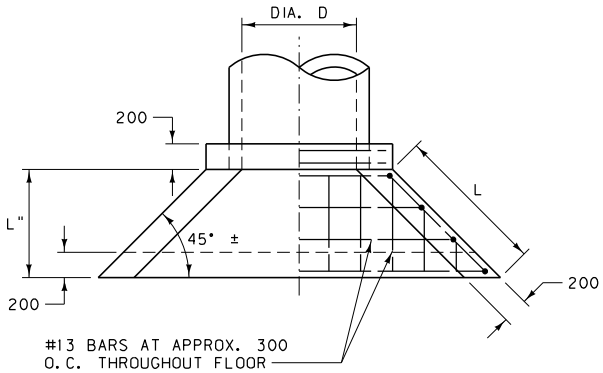

PLAN

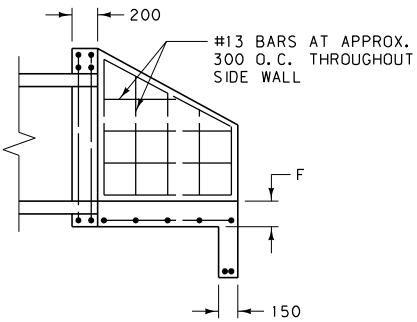

SECTION B-B

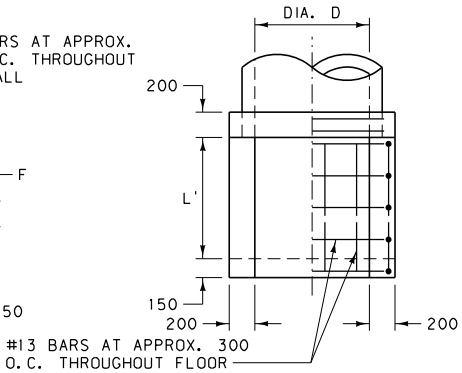

PLAN

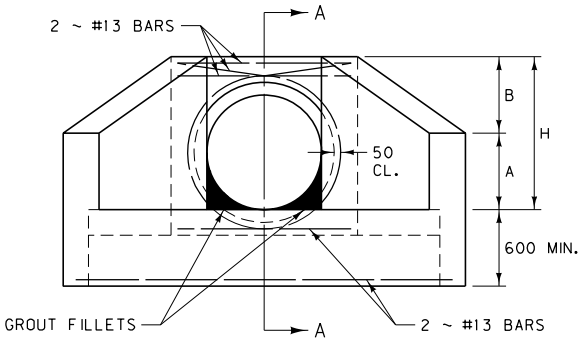

ELEVATION

INLET HEADWALL

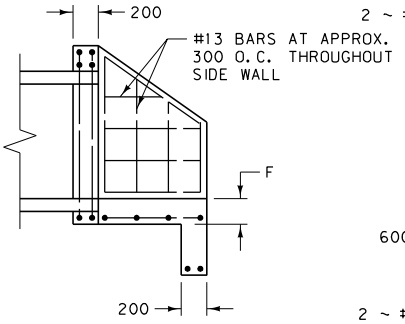

SECTION A-A

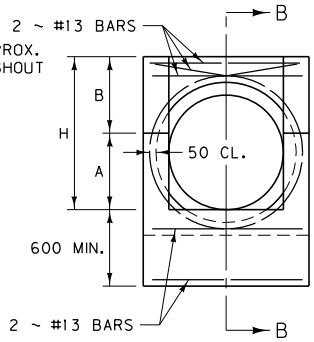

ELEVATION

OUTLET HEADWALL

CHAMFER ALL EXPOSED CORNERS 25 mm. REINFORCING STEEL TO BE NOT LESS THAN 40 mm TO NEAREST FACE OF CONCRETE.

INLET AND OUTLET HEADWALLS FOR RCP										
CULVERT		CL. "DD" CONC. OR EQUAL (m^3)		DIMENSION TABLE						
DIA. D	AREA (m^2)	INLET	OUTLET	A	B	H	L	L"	F	L'
450	0.164	0.7	0.5	400	400	800	750	550	200	650
600	0.292	0.8	0.6	450	450	900	900	650	200	750
750	0.456	1.1	0.8	550	550	1100	1050	750	200	850
900	0.657	1.4	1.0	600	600	1200	1200	850	250	950
1050	0.894	1.7	1.2	700	700	1400	1350	950	250	1050
1200	1.167	2.0	1.4	750	750	1500	1500	1050	250	1150

INLET AND OUTLET HEADWALLS FOR CMP										
CULVERT		CL. "DD" CONC. OR EQUAL (m^3)		DIMENSION TABLE						
DIA. D	AREA (m^2)	INLET	OUTLET	A	B	H	L	L"	F	L'
450	0.159	0.6	0.5	400	400	800	750	550	150	650
600	0.283	0.8	0.6	450	450	900	900	650	150	750
750	0.442	1.1	0.8	550	550	1100	1050	750	150	850
900	0.636	1.3	0.9	600	600	1200	1200	850	150	950
1050	0.866	1.6	1.1	700	700	1400	1350	950	150	1050
1200	1.131	1.8	1.3	750	750	1500	1500	1050	150	1150

ALL DIMENSIONS ARE MILLIMETERS (mm) UNLESS OTHERWISE NOTED.

DETAILED DRAWING

REFERENCE
STANDARD SPEC.
SECTION 613

DWG. NO.
613-12

INLET AND OUTLET
HEADWALLS FOR
RCP AND CMP PIPES

EFFECTIVE: FEBRUARY 2005

serving you with pride

MONTANA DEPARTMENT OF TRANSPORTATION

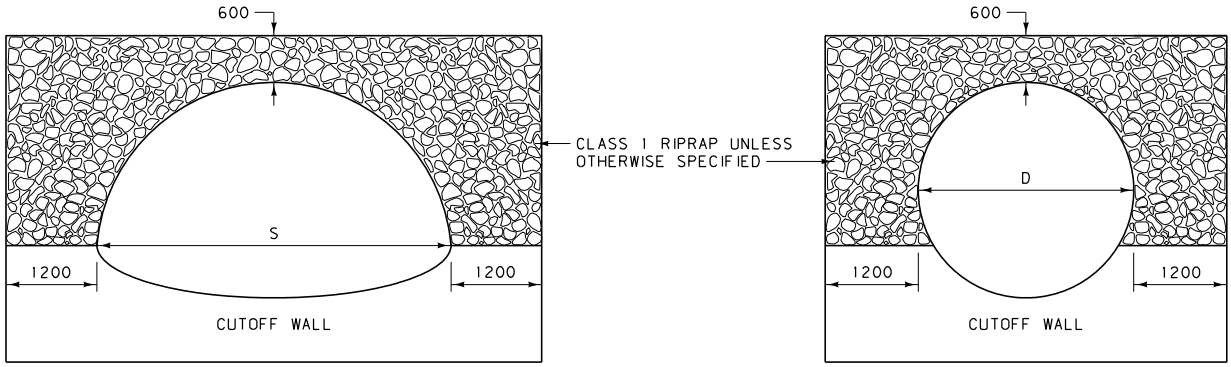

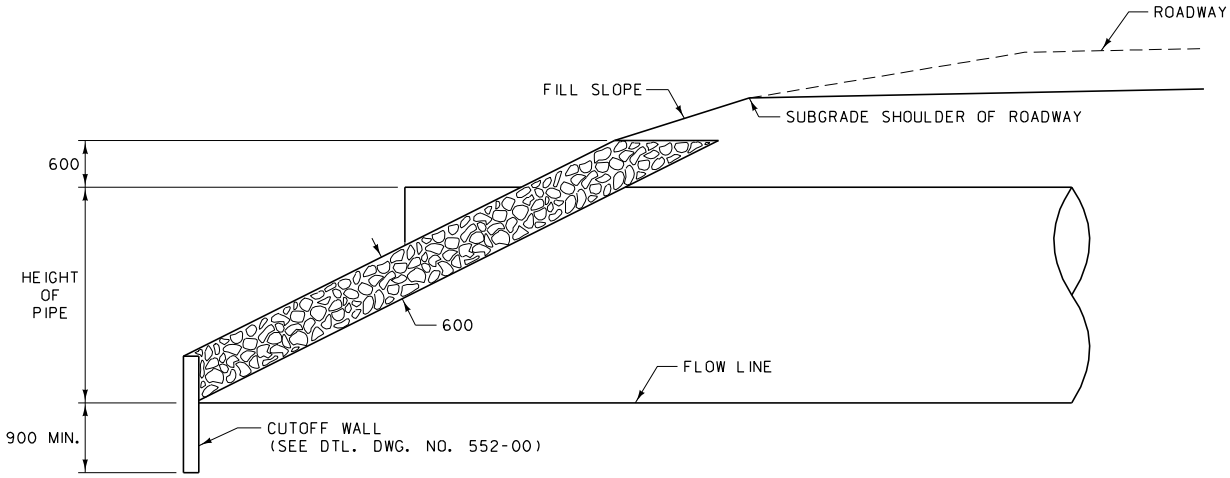

NOTES:

KEY ENDS OF RIPRAP WALLS INTO THE EMBANKMENT SLOPES A MINIMUM OF 600 mm FROM OUTER FACE OF THE RIPRAP FOR THE FULL HEIGHT OF THE RIPRAP WALL.

SEE SPECIFICATIONS FOR GRADATION, CLASS AND CONSTRUCTION METHODS.

ALL DIMENSIONS ARE MILLIMETERS (mm) UNLESS OTHERWISE NOTED.

DETAILED DRAWING	
REFERENCE STANDARD SPEC. SECTION 613	DWG. NO. 613-14
CULVERT RIPRAP	
EFFECTIVE: FEBRUARY 2005	
serving you with pride	MONTANA DEPARTMENT OF TRANSPORTATION

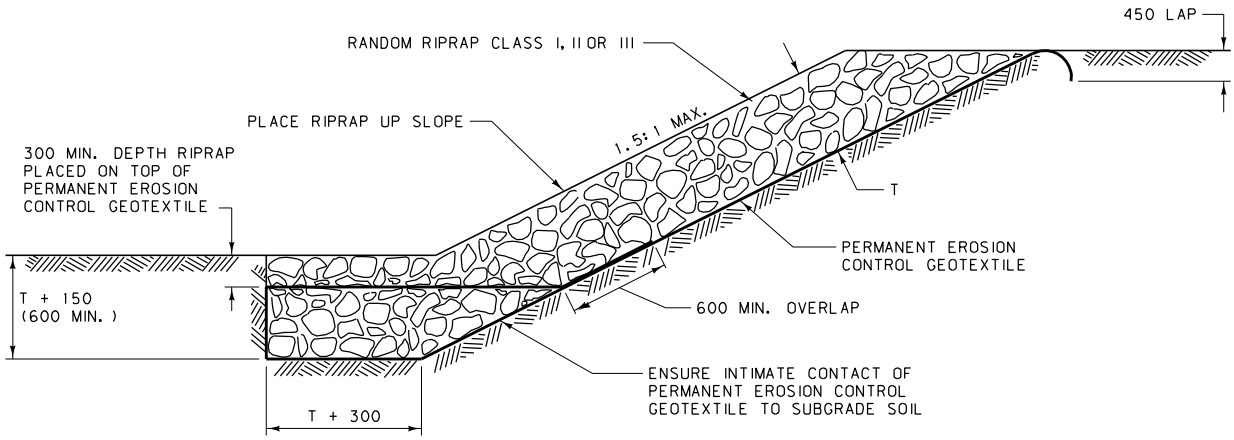

EMBANKMENT PROTECTION

MINIMUM T FOR:
CLASS I RIPRAP = 450
CLASS II RIPRAP = 750
CLASS III RIPRAP = 900

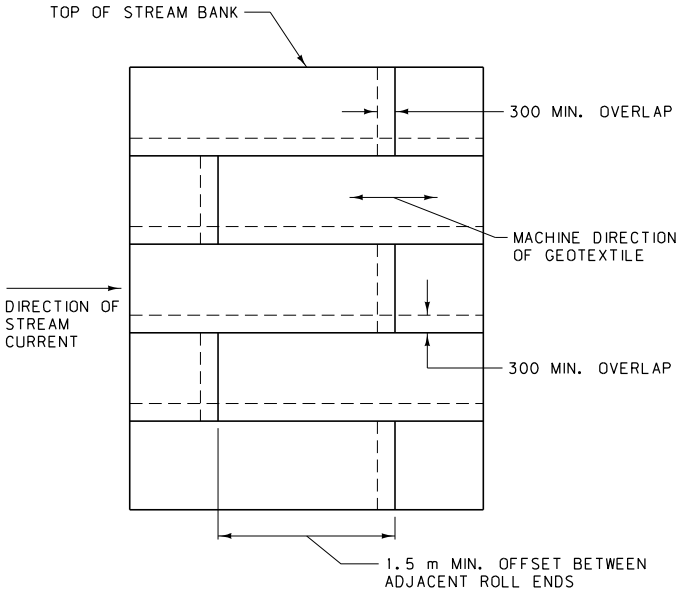

GEOTEXTILE PLACEMENT DETAIL

METHOD FOR PLACING PERMANENT EROSION CONTROL GEOTEXTILE FOR PROTECTION OF SREAM BANKS

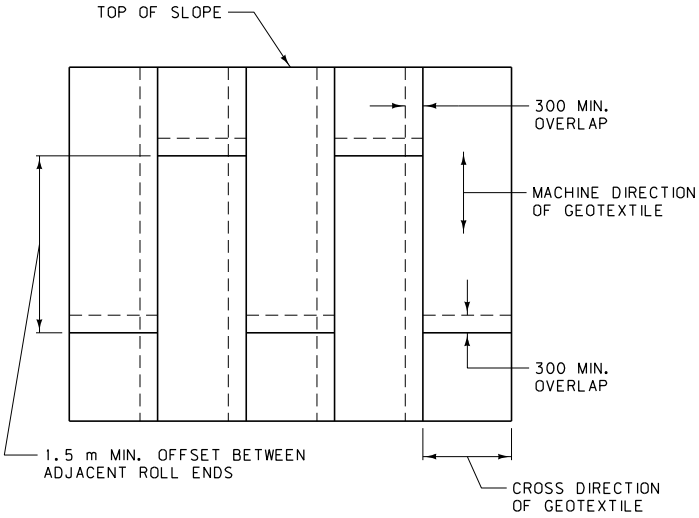

GEOTEXTILE PLACEMENT DETAIL

METHOD FOR PLACING PERMANENT EROSION CONTROL GEOTEXTILE FOR PROTECTION OF CUT AND FILL SLOPES

NOTES:

INSTALL PERMANENT EROSION CONTROL GEOTEXTILE IN ACCORDANCE WITH MANUFACTURER'S SPECIFICATIONS AND MDT STANDARD SPECIFICATIONS SECTION 622.

PROVIDE PERMANENT EROSION CONTROL GEOTEXTILE MEETING MDT STANDARD SPECIFICATIONS SECTION 716.

ALL DIMENSIONS ARE MILLIMETERS (mm) UNLESS OTHERWISE NOTED.

DETAILED DRAWING	
REFERENCE STANDARD SPEC. SECTION 613, 622	DWG. NO. 613-16
EMBANKMENT PROTECTION	
EFFECTIVE: APRIL 2006	
serving you with pride	MONTANA DEPARTMENT OF TRANSPORTATION

TURF REINFORCEMENT MAT & RIPRAP DRAINAGE CHUTE

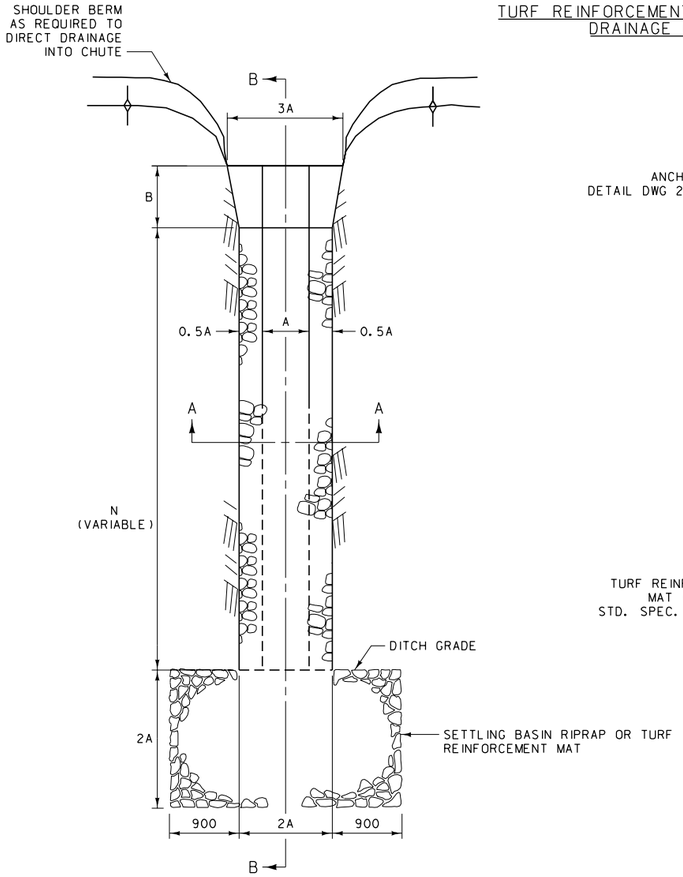

PLAN VIEW

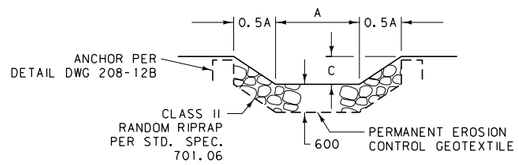

SECTION A-A

RIPRAP CHUTE

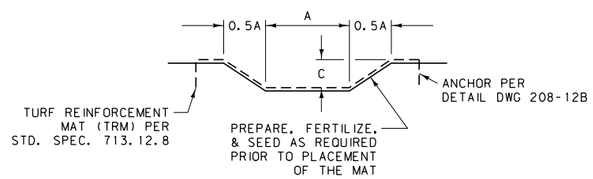

SECTION A-A

TURF REINFORCEMENT MAT CHUTE

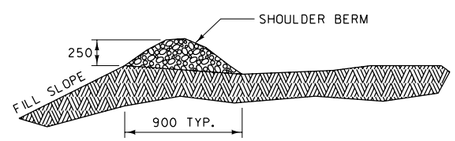

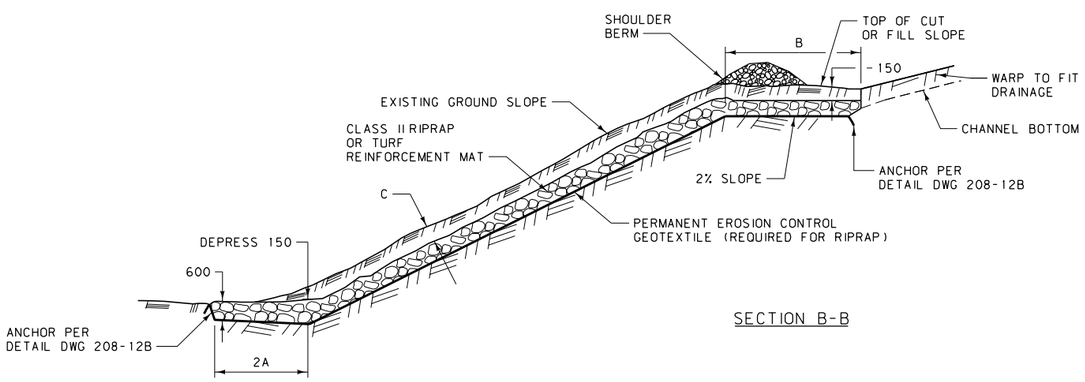

SECTION B-B

TYPE	DIMENSIONS			QUANTITIES	
	A	B	C	RIPRAP	TURF REINFORCEMENT MAT
1	600	1200	100	3.24 m³ + (N x 0.72) m³/m	5.43 m² + (N x 1.233) m²/m
2	600	1200	300	3.24 m³ + (N x 0.72) m³/m	5.63 m² + (N x 1.449) m²/m
3	1200	2400	300	10.37 m³ + (N x 1.44) m³/m	17.54 m² + (N x 2.542) m²/m
4	1200	2400	450	10.37 m³ + (N x 1.44) m³/m	17.84 m² + (N x 2.700) m²/m

CONCRETE DRAINAGE CHUTE

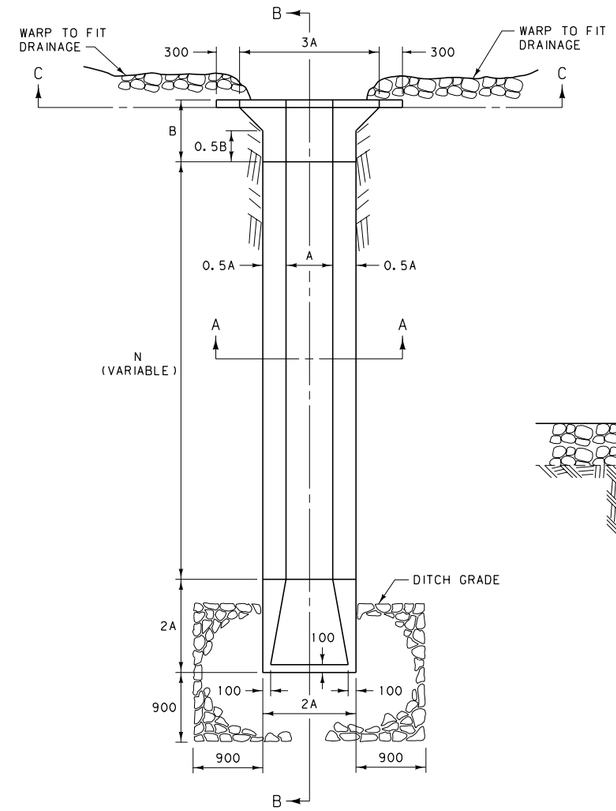

PLAN VIEW

CONCRETE:

USE CLASS "AC" OR "DC" CONCRETE UNLESS OTHERWISE NOTED, CONFORMING TO SECTION 551 OF THE STANDARD SPECIFICATIONS. CONCRETE MAY BE PNEUMATICALLY APPLIED.

✱ BANK PROTECTION:

USE TYPE III BANK PROTECTION, CONFORMING TO SUBSECTION 613.03.2 OF THE STANDARD SPECIFICATIONS. THICKNESS IS 300 mm MIN.

INLET CONDITIONS:

DEPRESS THE INLET BELOW THE NATURAL DRAINAGE BASIN TO PREVENT FLOW FROM BYPASSING THE DRAINAGE CHUTE.

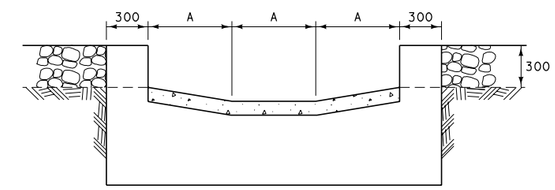

SECTION C-C

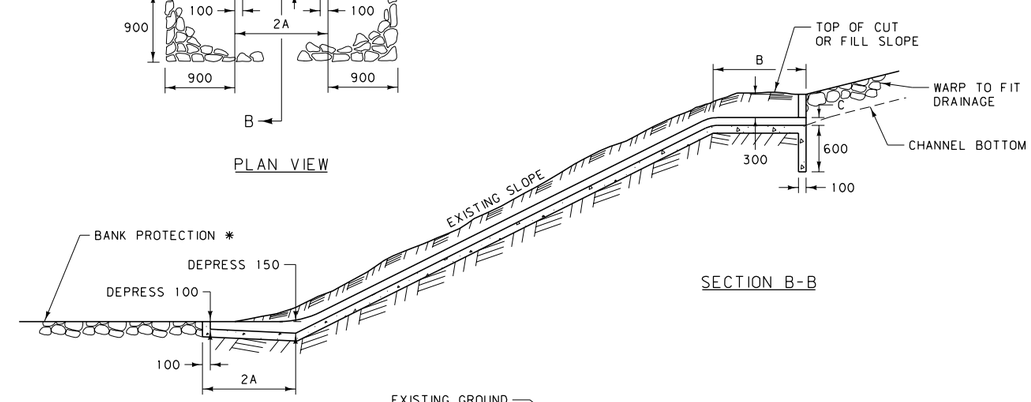

SECTION B-B

SECTION A-A

TYPE	DIMENSIONS			QUANTITIES
	A	B	C	CONCRETE
1	600	1200	100	0.49 m³ + (N x 0.123) m³/m
2	600	1200	300	0.53 m³ + (N x 0.143) m³/m
3	1200	2450	300	1.60 m³ + (N x 0.254) m³/m
4	1200	2450	450	1.66 m³ + (N x 0.269) m³/m

ALL DIMENSIONS ARE MILLIMETERS (mm) UNLESS OTHERWISE NOTED.

DETAILED DRAWING

REFERENCE STANDARD SPEC. SECTION 551.613

DWG. NO. 613-18

DRAINAGE CHUTES

--REVISED--
May 2009

EFFECTIVE: FEBRUARY 2005

serving you with pride

MONTANA DEPARTMENT OF TRANSPORTATION