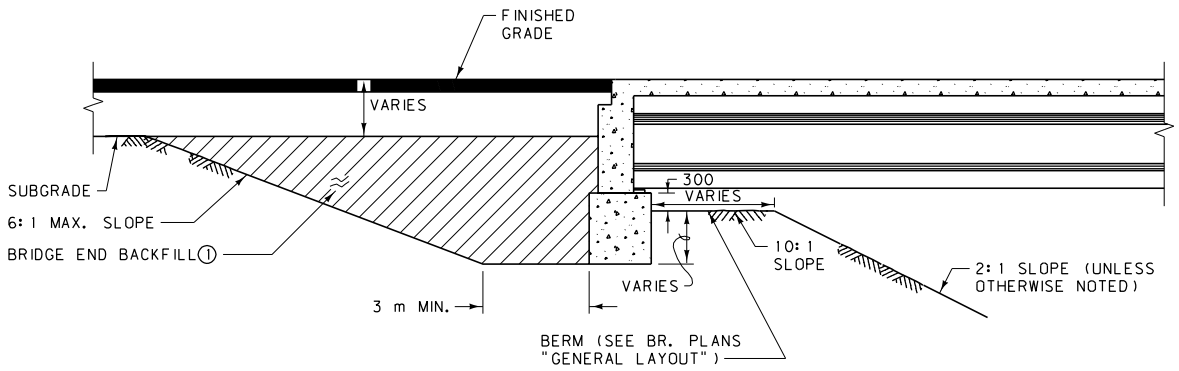

SECTION A-A

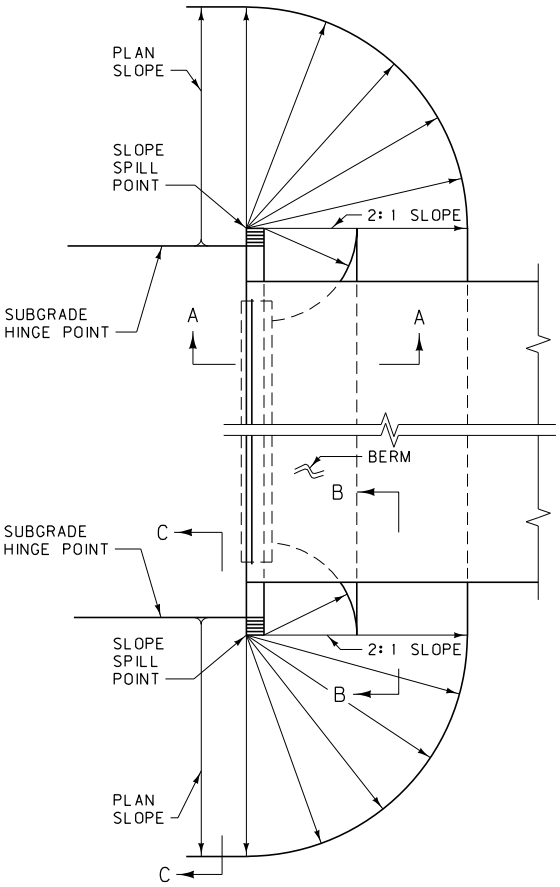

PLAN VIEW

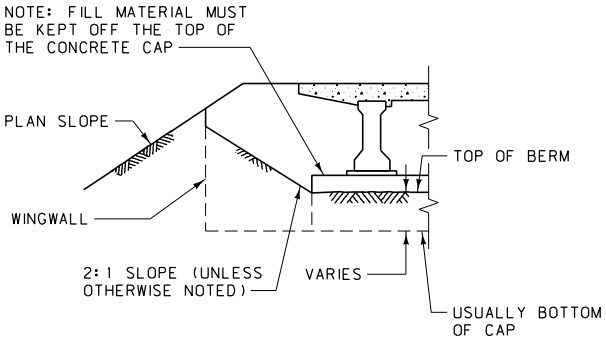

SECTION B-B

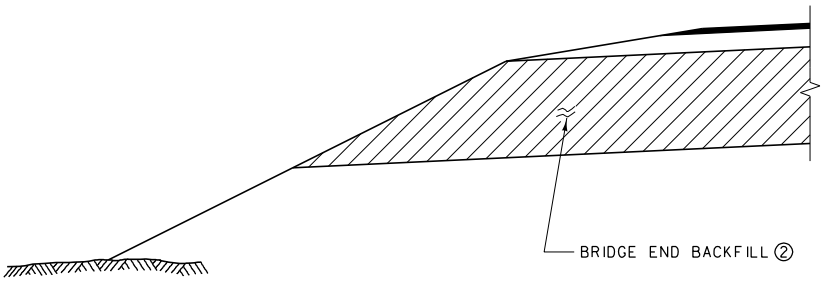

SECTION C-C

ALL DIMENSIONS ARE MILLIMETERS (mm) UNLESS OTHERWISE NOTED.

NOTES:

① DO NOT PLACE THE BRIDGE END BACKFILL UNTIL AFTER THE BACKWALL AND DECK SLAB ARE COMPLETED. PLACE ALL MATERIAL IN 155 mm LAYERS AND COMPACT IN ACCORDANCE WITH SECTION 203.03.3 OF THE STANDARD SPECIFICATIONS.

② WHEN THE BRIDGE END BACKFILL DOES NOT DAYLIGHT AT AN EMBANKMENT SLOPE TO PROVIDE DRAINAGE, EXTEND THE BRIDGE END BACKFILL 1 m BEYOND THE WINGWALL AND DAYLIGHT TO THE SLOPE FACING THE SPANNED CHANNEL.

DETAILED DRAWING	
REFERENCE STANDARD SPEC. SECTION 203	DWG. NO. 203-00
ROADWAY EMBANKMENT AT BRIDGE END	
--REVISED-- January 2008	EFFECTIVE: FEBRUARY 2005
	serving you with pride — MONTANA DEPARTMENT OF TRANSPORTATION

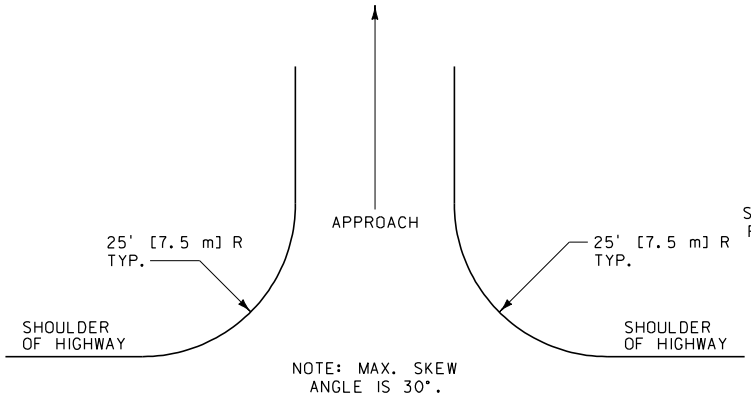

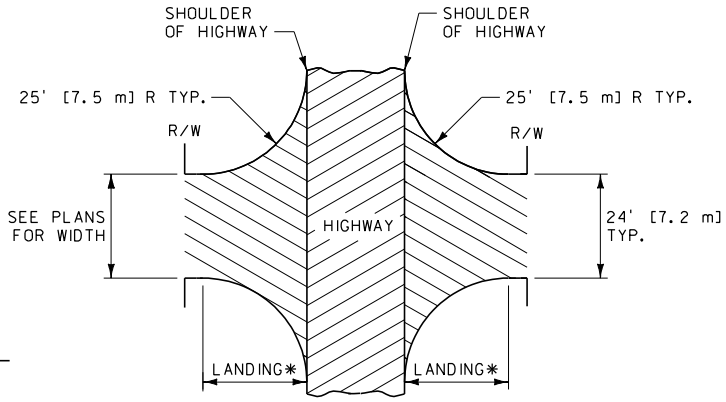

* 25.0' [7.5 m] MIN. FOR PRIVATE OR FIELD APP.
75.0' [25.0 m] MIN. FOR COUNTY AND MAIN ROADS.

LANDING GRADE (-3% DESIRABLE, +3% ALLOWABLE).

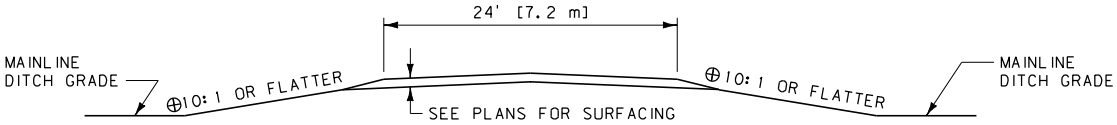

TYPICAL SECTION WITHIN CLEAR ZONE

USE A PIPE AS NECESSARY FOR DRAINAGE. INSTALL CULVERTS OUTSIDE THE CLEAR ZONE OR PROVIDE END TREATMENT.

⊕PROVIDE 6:1 SLOPES AT A MINIMUM.

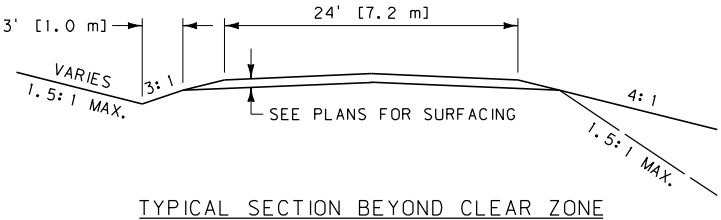

TYPICAL SECTION BEYOND CLEAR ZONE

BACK SLOPES **	
0' - 5' [0.0 m - 1.5 m]	4:1
5' - 10' [1.5 m - 3.0 m]	2:1
OVER 10' [3.0 m]	1.5:1

FILL SLOPES **	
0' - 10' [0.0 m - 3.0 m]	4:1
10' - 20' [3.0 m - 6.0 m]	2:1
OVER 20' [6.0 m]	1.5:1

NOTES:

1. APPROACH GRADE BEYOND LANDING IS NOT TO EXCEED 10% UNLESS TRAFFIC VOLUMES AND COST INDICATE SUCH TO BE JUSTIFIABLE.
2. CONSTRUCT APPROACHES TO FIT LOCAL CONDITIONS.
3. SECURE WRITTEN PERMISSION FROM LANDOWNER FOR WORK BEYOND THE RIGHT-OF-WAY.

** CRITERIA SHOWN ARE FOR PRIVATE AND FARM FIELD APPROACHES. FOR COUNTY AND MAIN ROADS USE ESTABLISHED STANDARDS FOR APPLICABLE FUNCTIONAL CLASS.

UNITS SHOWN IN BRACKETS [] ARE METRIC AND ARE IN MILLIMETERS (mm) UNLESS OTHER UNITS ARE SHOWN.

DETAILED DRAWING

REFERENCE STANDARD SPEC. SECTION 203

DWG. NO. 203-05

APPROACHES

--REVISED--
MAY 2011

EFFECTIVE: FEBRUARY 2005

MDT MONTANA DEPARTMENT OF TRANSPORTATION

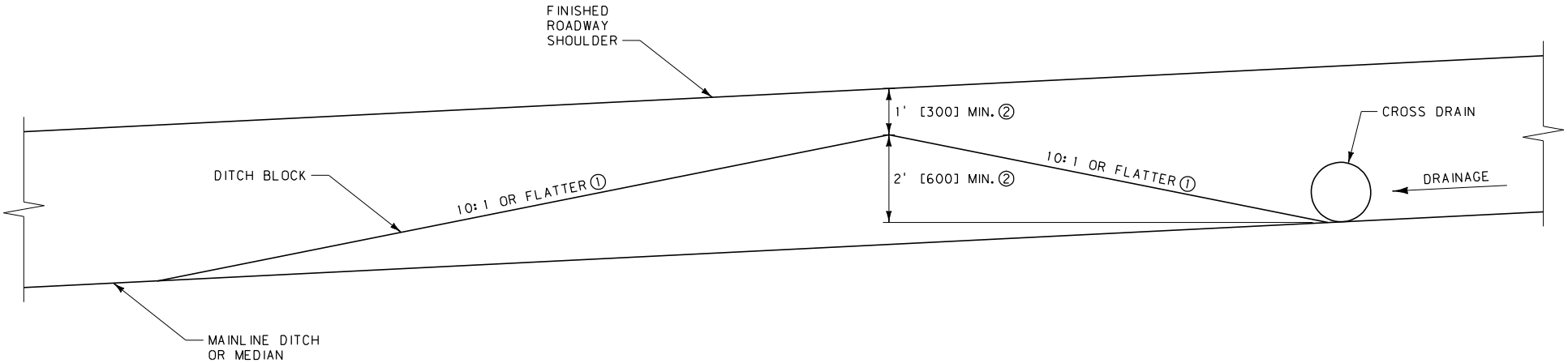

NOTES:

① CONSTRUCT DITCH BLOCKS TO FIT LOCAL CONDITIONS. WHEN CONDITIONS DO NOT ALLOW 10:1 SLOPES, USE 6:1 SLOPES.

② HEIGHTS SHOWN ARE MINIMUMS. SET HEIGHT OF DITCH BLOCKS BASED ON AMOUNT OF ANTICIPATED DRAINAGE.

UNITS SHOWN IN BRACKETS [] ARE METRIC AND ARE IN MILLIMETERS (mm) UNLESS OTHER UNITS ARE SHOWN.

DETAILED DRAWING	
REFERENCE STANDARD SPEC. SECTION 203	DWG. NO. 203-20
DITCH BLOCKS	
EFFECTIVE: FEBRUARY 2005	

--REVISED--
MAY 2011

MDT MONTANA DEPARTMENT OF TRANSPORTATION