RURAL ①

RURAL WITH GUARDRAIL ②

URBAN ③

REGULATORY
R1-1 / R1-2

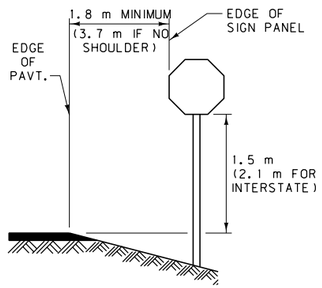

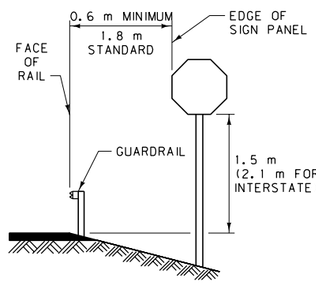

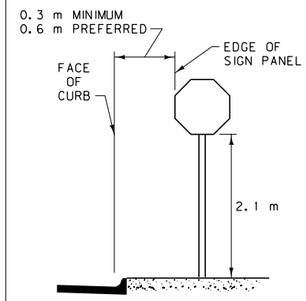

REGULATORY
EXCEPT R1-1 / R1-2

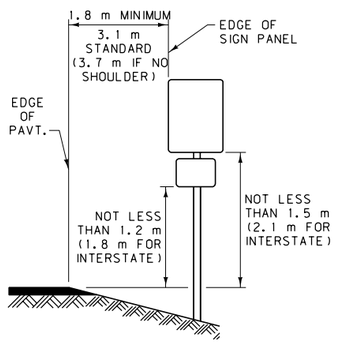

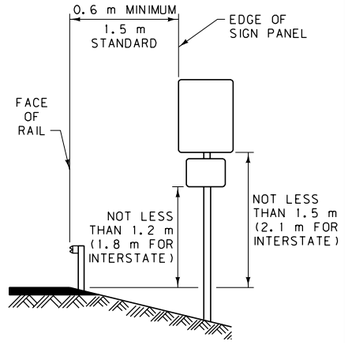

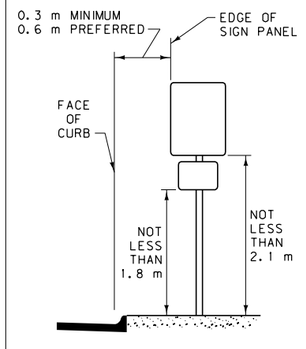

WARNING

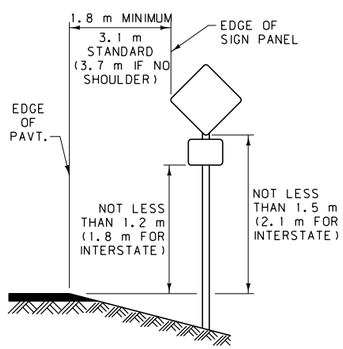

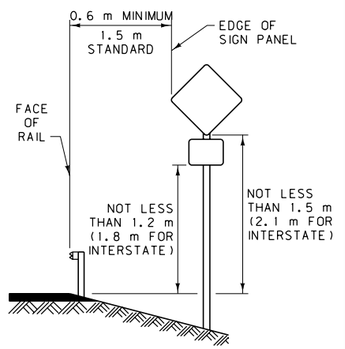

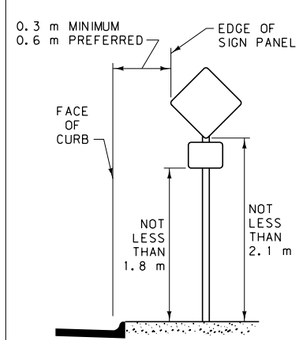

ROUTE MARKERS

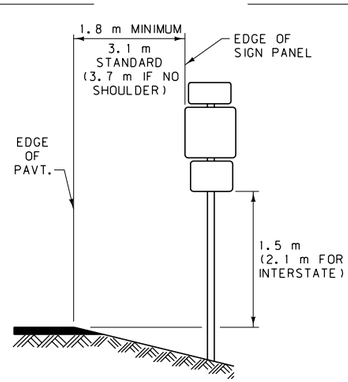

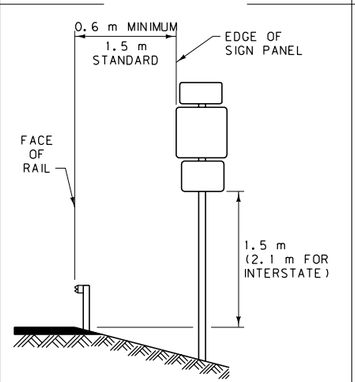

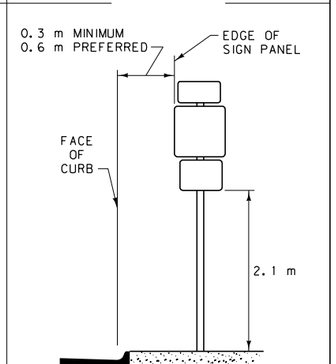

GUIDE SIGNS

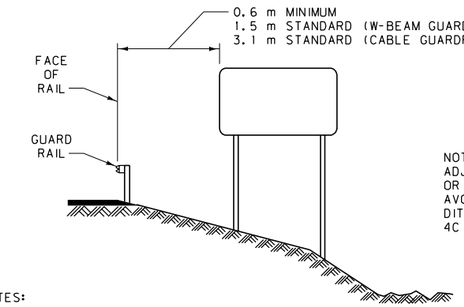

NOTE:
ADJUST SIGN LOCATION OR CLEARANCE SLIGHTLY TO AVOID PLACING POSTS IN DITCH BOTTOMS. SEE NOTE 4C BELOW.

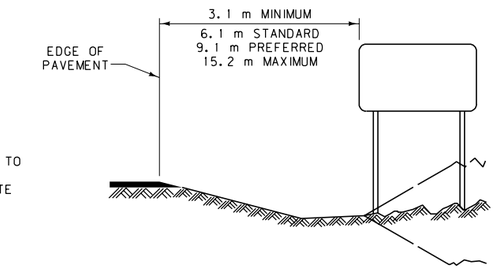

NOTES:

1. PLACE ALL SIGNS AT THE CLEARANCE AND MOUNTING HEIGHTS SHOWN.
2. FOR REGULATORY, WARNING AND ROUTE MARKER SIGNS, AND THEIR ASSEMBLIES, ON HIGHWAYS OTHER THAN INTERSTATE:
   A) USE DIAGRAMS LOCATED IN COLUMN ① WHEN PLACING THESE SIGNS IN STANDARD RURAL CONDITIONS. USE COLUMN ② WHEN PLACING THESE SIGNS BEHIND GUARDRAIL IN RURAL CONDITIONS. USE COLUMN ③ WHEN PLACING THESE SIGNS IN URBAN CONDITIONS WHERE THERE IS ADEQUATE CLEARANCE AND SIDEWALK WIDTH.
   B) WHERE SIDEWALK WIDTH IS LIMITED IN URBAN CONDITIONS, SEE DTL. DWG. NO. 619-18 FOR PLACEMENT DETAILS.
3. FOR REGULATORY (ALL OTHER), WARNING AND ROUTE MARKER SIGNS, AND THEIR ASSEMBLIES, ON INTERSTATE HIGHWAYS: THE CLEARANCE IS 6.1 m FROM THE EDGE OF PAVEMENT IN COLUMN ① FOR STANDARD RURAL CONDITIONS. THE CLEARANCES LISTED IN COLUMNS ② AND ③ REMAIN AS SHOWN.
4. FOR GUIDE SIGNS AND THEIR ASSEMBLIES:
   A) USE THE DIAGRAMS LOCATED ABOVE WHEN PLACING THESE SIGNS IN THE GIVEN RURAL CONDITIONS.
   B) FOR PLACEMENT OF THESE SIGNS IN URBAN CONDITIONS, SEE THE SIGN LOCATION AND SPECIFICATION SHEETS IN THE SIGNING PLANS FOR EACH INDIVIDUAL SIGN.
   C) THE MAXIMUM CLEARANCE OF THESE SIGNS IS 15.2 m IN ANY CONDITION.
   D) SEE DTL. DWG. NO. 619-08 FOR MOUNTING HEIGHTS.
5. WITHIN THE CITY LIMITS OR IN A SIDEWALK AND CURB AREA, MOUNT SIGNS TO HAVE THE PROPER CLEARANCES, BUT AVOID ANY CONFLICT BETWEEN THE POST AND THE MAIN WALKING AREA OF THE SIDEWALK, OR WITH DOORWAYS OR WINDOWS OF ADJACENT BUILDINGS. THE EXACT LOCATION OF THESE SIGN INSTALLATIONS WILL BE DETERMINED BY THE ENGINEER. SEE DTL. DWG. NO. 619-18 FOR VARIOUS CANTILEVER TYPE MOUNTINGS.
6. EVALUATE SIGNS WITHIN CLEAR ZONES (TABLES BELOW) FOR SUPPORT BREAKAWAY REQUIREMENTS (CONTACT MDT TRAFFIC SECTION FOR CRITERIA).

CLEAR ZONE DISTANCES
(IN METERS FROM EDGE OF DRIVING LANE)

DESIGN SPEED	DESIGN ADT	FILL SLOPES			CUT SLOPES		
		6:1 OR FLATTER	5:1 TO 4:1	3:1	3:1	4:1 TO 5:1	6:1 OR FLATTER
60 km/h OR LESS	UNDER 750	2.0-3.0	2.0-3.0	**	2.0-3.0	2.0-3.0	2.0-3.0
	750-1499	3.0-3.5	3.5-4.5	**	3.0-3.5	3.0-3.5	3.0-3.5
	1500-6000	3.5-4.5	4.5-5.0	**	3.5-4.5	3.5-4.5	3.5-4.5
	OVER 6000	4.5-5.0	5.0-5.5	**	4.5-5.0	4.5-5.0	4.5-5.0
70-80 km/h	UNDER 750	3.0-3.5	3.5-4.5	**	2.5-3.0	2.5-3.0	3.0-3.5
	750-1499	4.5-5.0	5.0-6.0	**	3.0-3.5	3.5-4.5	4.5-5.0
	1500-6000	5.0-5.5	6.0-8.0	**	3.5-4.5	4.5-5.0	5.0-5.5
	OVER 6000	6.0-6.5	7.5-8.5	**	4.5-5.0	5.5-6.0	6.0-6.5
90 km/h	UNDER 750	3.5-4.5	4.5-5.5	**	2.5-3.0	3.0-3.5	3.0-3.5
	750-1499	5.0-5.5	6.0-7.5	**	3.0-3.5	4.5-5.0	5.0-5.5
	1500-6000	6.0-6.5	7.5-9.0	**	4.5-5.0	5.0-5.5	6.0-6.5
	OVER 6000	6.5-7.5	8.0-10.0 *	**	5.0-5.5	6.0-6.5	6.5-7.5
100 km/h	UNDER 750	5.0-5.5	6.0-7.5	**	3.0-3.5	3.5-4.5	4.5-5.0
	750-1499	6.0-7.5	8.0-10.0 *	**	3.5-4.5	5.0-5.5	6.0-6.5
	1500-6000	8.0-9.0	10.0-12.0 *	**	4.5-5.5	5.5-6.5	7.5-8.0
	OVER 6000	9.0-10.0 *	11.0-13.5 *	**	6.0-6.5	7.5-8.0	8.0-8.5
110 km/h	UNDER 750	5.5-6.0	6.0-8.0	**	3.0-3.5	4.5-5.0	4.5-4.9
	750-1499	7.5-8.0	8.5-11.0 *	**	3.5-5.0	5.5-6.0	6.0-6.5
	1500-6000	8.5-10.0 *	10.5-13.0 *	**	5.0-6.0	6.5-7.5	8.0-8.5
	OVER 6000	9.0-10.5 *	11.5-14.0 *	**	6.5-7.5	8.0-9.0	8.5-9.0

* WHEN AN INVESTIGATION OR ACCIDENT HISTORY INDICATES A HIGH PROBABILITY OF ACCIDENTS, CLEAR ZONE DISTANCES GREATER THAN 9 m MAY BE PROVIDED AS INDICATED. CLEAR ZONES MAY ALSO BE LIMITED TO 9 m TO PROVIDE A CONSISTENT ROADWAY TEMPLATE WHEN EXPERIENCE WITH PREVIOUS SIMILAR PROJECTS INDICATES SATISFACTORY PERFORMANCE.

** FIXED OBJECTS, INCLUDING SIGN POSTS, SHOULD NOT BE ALLOWED IN THE VICINITY OF THE TOE OF THESE SLOPES. SEE AASHTO ROADSIDE DESIGN GUIDE FOR ADDITIONAL CONSIDERATIONS IN LOCATING SIGNS.

HORIZONTAL CURVE ADJUSTMENTS
(APPLICALBLE ON OUTSIDE OF CURVE ONLY)

RADIUS (m)	DESIGN SPEED (km/h)					
	60	70	80	90	100	110
900	1.1	1.1	1.1	1.2	1.2	1.2
700	1.1	1.1	1.2	1.2	1.2	1.3
600	1.1	1.2	1.2	1.2	1.3	1.4
500	1.1	1.2	1.2	1.3	1.3	1.4
450	1.2	1.2	1.3	1.3	1.4	1.5
400	1.2	1.2	1.3	1.3	1.4	
350	1.2	1.2	1.3	1.4	1.5	
300	1.2	1.3	1.4	1.5	1.5	
250	1.3	1.3	1.4	1.5		
200	1.3	1.4	1.5			
150	1.4	1.5				
100	1.5					

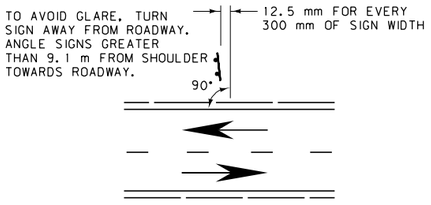

SKEW DIAGRAM

ALL DIMENSIONS ARE MILLIMETERS (mm) UNLESS OTHERWISE NOTED.

DETAILED DRAWING

REFERENCE STANDARD SPEC. SECTION 619

DWG. NO. 619-00

SIGN CLEARANCES AND MOUNTING HEIGHTS

EFFECTIVE: FEBRUARY 2005

MDT serving you with pride — MONTANA DEPARTMENT OF TRANSPORTATION

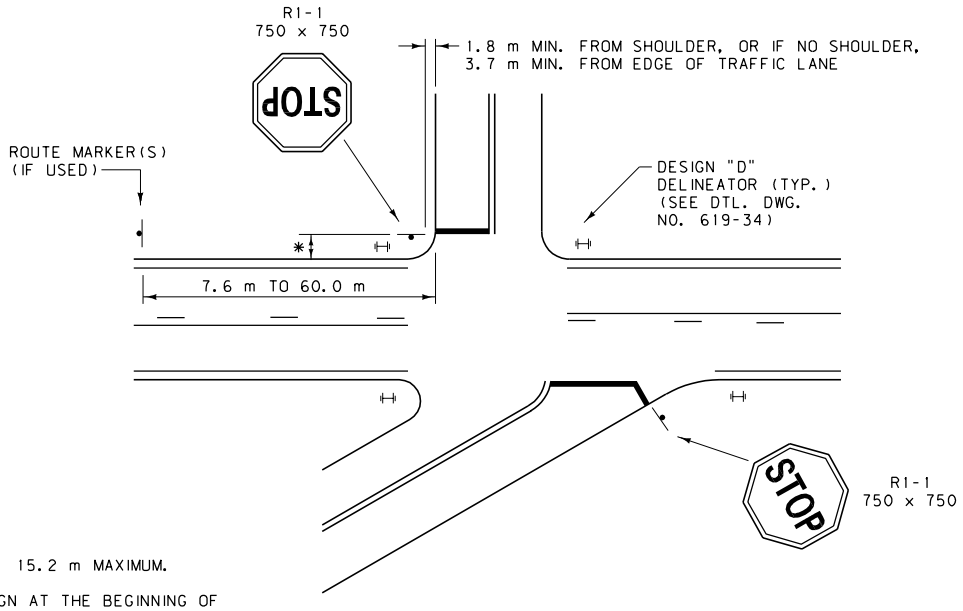

NOTES:

* 1.8 m MINIMUM; 15.2 m MAXIMUM.

PLACE R1-1 SIGN AT THE BEGINNING OF CURB RADIUS OR SHOULDER RADIUS, OR 1.2 m MIN. IN ADVANCE OF THE MARKED OR UNMARKED CROSSWALK.

SEE PLANS FOR FINAL SIGNING AND PAVEMENT MARKING LOCATIONS.

RURAL

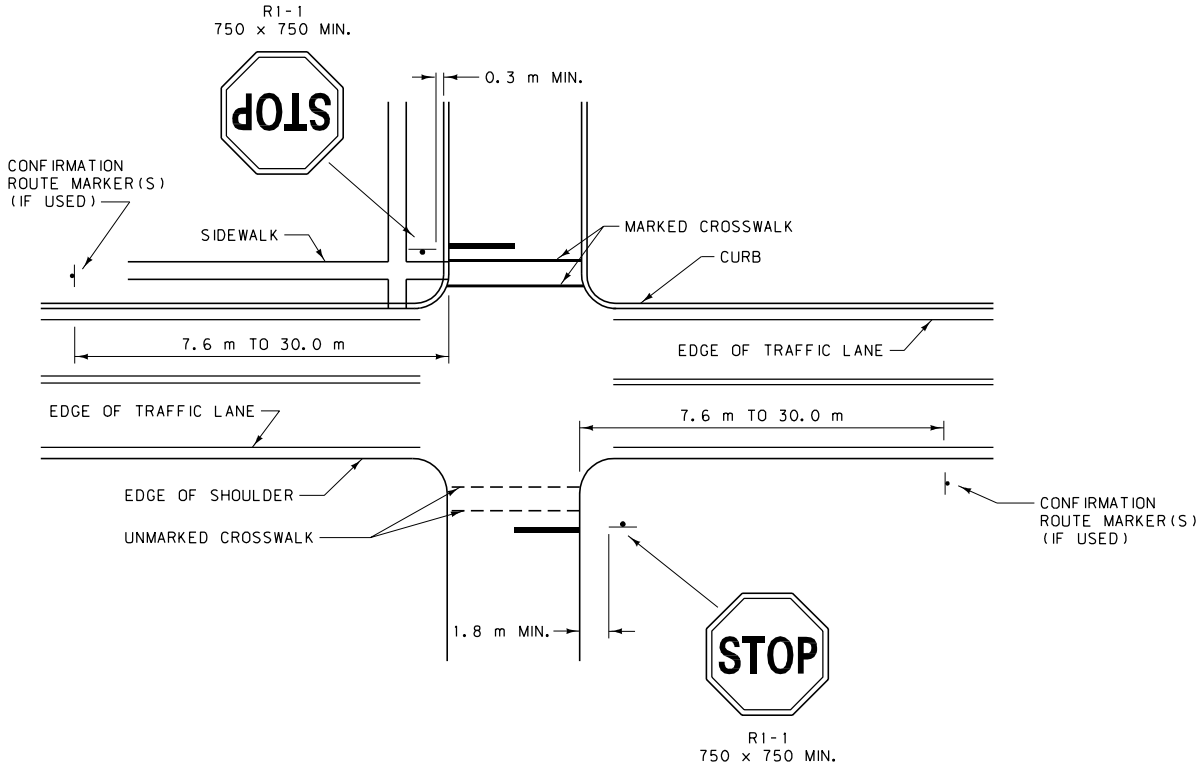

URBAN

ALL DIMENSIONS ARE MILLIMETERS (mm) UNLESS OTHERWISE NOTED.

DETAILED DRAWING	
REFERENCE STANDARD SPEC. SECTION 619	DWG. NO. 619-02
TYPICAL RURAL AND URBAN APPROACHES	
EFFECTIVE: FEBRUARY 2005	
serving you with pride	MONTANA DEPARTMENT OF TRANSPORTATION

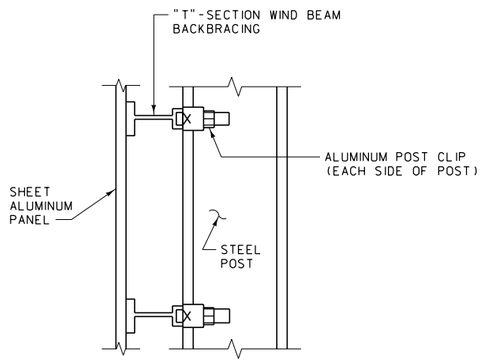

BACKBRACE DETAIL

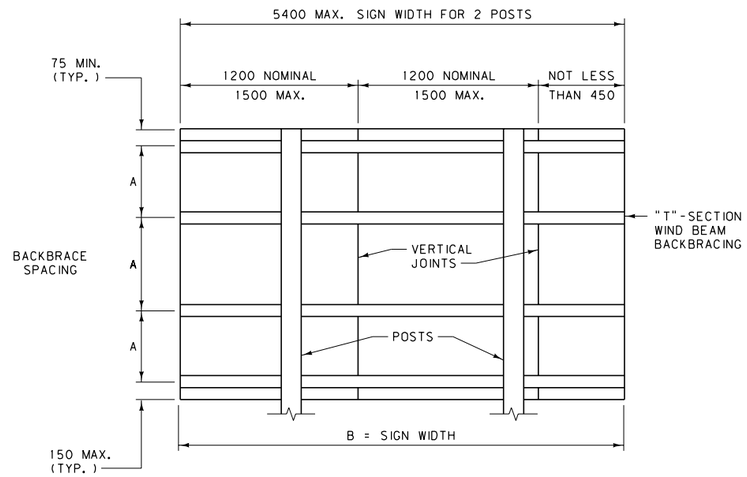

BACKBRACING TABLE - ALUMINUM SIGNS		
MAXIMUM BACKBRACE SPACING "A"	MAXIMUM WIDTH "B"	
	2 POST	3 POST
500	5400	8100
550	5100	7700
600	4950	7400
750	4425	6600
900	4050	6000
1050	3750	5550

FOR ALUMINUM PLATE THICKNESS INFORMATION SEE SECTION 704.01 OF THE STANDARD SPECIFICATIONS.

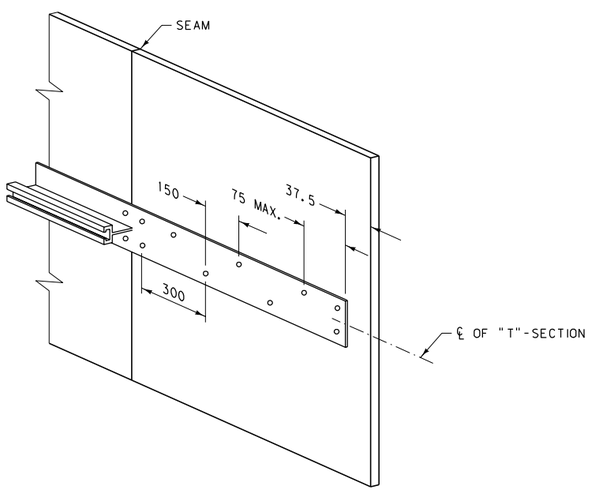

RIVET SPACING DETAIL

LOCATE RIVETS AT 150 mm ALTERNATE CENTERS ON HORIZONTAL EXTRUDED "T"-SECTION.

DOUBLE RIVETS (TOP AND BOTTOM OR LEFT AND RIGHT OF EXTRUDED "T"-SECTION) AT HORIZONTAL AND VERTICAL JOINTS IN SHEET ALUMINUM FACE AND AT ENDS OF EXTRUDED "T"-SECTION.

COLOR RIVET HEADS TO MATCH ADJACENT SHEETING.

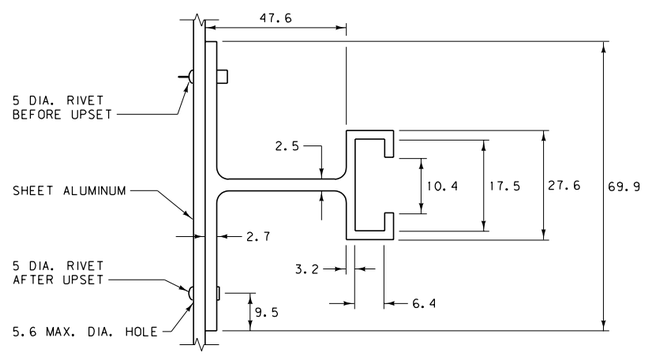

EXTRUDED "T"-SECTION BACKBRACE

NOTES:

CONFORM ALL ALUMINUM SIGNS TO SECTIONS 619, 704.01.1 AND 704.01.2 OF THE STANDARD SPECIFICATIONS.

FOR SIGNS 1200 mm HIGH BY 1800 mm LONG OR LESS USE A SINGLE SHEET OF ALUMINUM.

DO NOT USE HORIZONTAL JOINTS ON SIGNS 1800 mm IN HEIGHT AND SMALLER. THE MINIMUM SHEET WIDTH IS 450 mm.

SIGNS OVER 1800 mm HIGH MAY HAVE HORIZONTAL AND VERTICAL JOINTS. THE MINIMUM SHEET SIZE IS 450 mm WIDE BY 450 mm HIGH.

CLEAN AND DRY POST CLIP NUTS, THEN TORQUE TO 25.4 N·m.

LOCATE ALL HORIZONTAL JOINTS AT A "T"-SECTION.

NO SPLICES ARE ALLOWED IN EXTRUDED "T"-SECTIONS.

USE SCREWS, BOLTS AND LOCKWASHERS THAT ARE ALUMINUM ALLOY MEETING ASTM B 211M FOR ALLOY 2024-T4, STAINLESS STEEL, OR CADMIUM PLATED STEEL MEETING ASTM B 766.

USE ONLY ALUMINUM RIVETS.

THE MAXIMUM GAP BETWEEN INDIVIDUAL SIGN PANELS AT JOINTS IS 1.6 mm AT ANY POINT.

THE ENGINEER MAY APPROVE ADDITIONAL METHODS TO PREVENT LIGHT LEAKAGE THROUGH SIGN PANEL SEAMS.

ALL DIMENSIONS ARE MILLIMETERS (mm) UNLESS OTHERWISE NOTED.

DETAILED DRAWING	
REFERENCE STANDARD SPEC. SECTION 619, 704	DWG. NO. 619-04
ALUMINUM SHEET INCREMENT SIGN CONSTRUCTION DETAILS	
EFFECTIVE: FEBRUARY 2005	
serving you with pride	MONTANA DEPARTMENT OF TRANSPORTATION

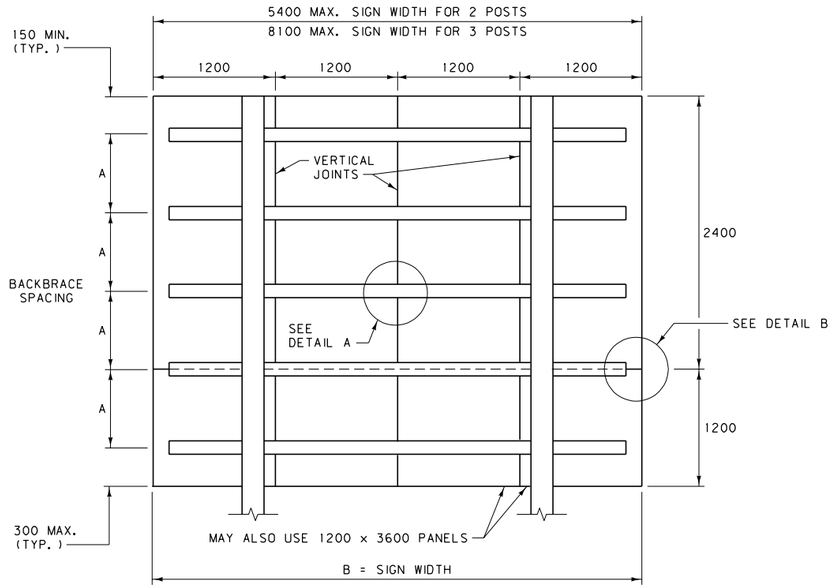

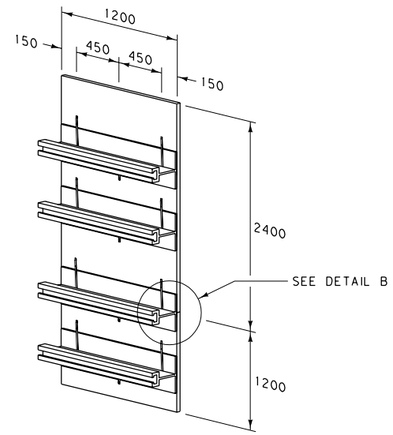

ALUMINUM CLIP PLACEMENT

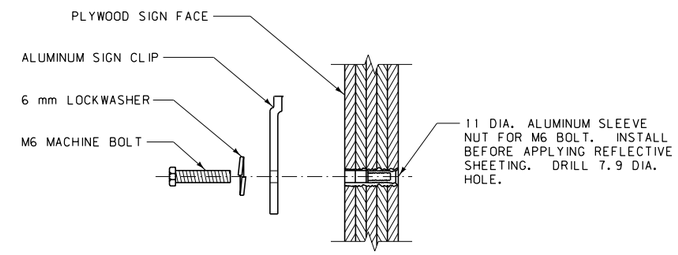

CLIP DETAIL

BACKBRACING TABLE - PLYWOOD SIGNS		
MAXIMUM BACKBRACE SPACING "A"	MAXIMUM WIDTH "B"	
	2 POST	3 POST
500	5400	8100
550	5100	7700
600	4950	7400
750	4425	6600
900	4050	6000
1050	3750	5550

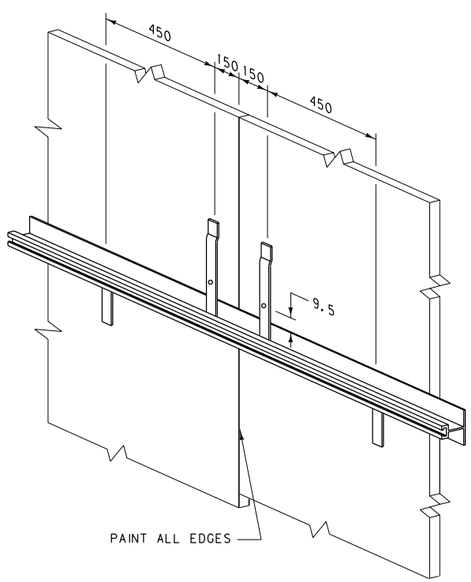

DETAIL A
VERTICAL JOINT

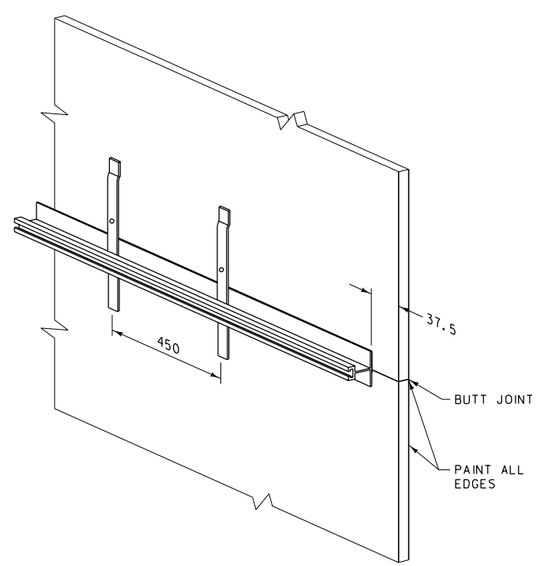

DETAIL B
HORIZONTAL JOINT

NOTES:

CONFORM ALL PLYWOOD SIGNS TO SECTIONS 619, 704.01.3 AND 704.02.2 OF THE STANDARD SPECIFICATIONS.

ON SIGNS 1200 mm HIGH AND GREATER, DO NOT USE ANY PANELS LESS THAN 1200 mm IN HEIGHT.

DO NOT USE HORIZONTAL JOINTS ON SIGNS LESS THAN 1200 mm IN HEIGHT.

FOR SIGNS WITH WIDTHS THAT ARE NOT IN MULTIPLES OF 1200 mm, PLACE THE ODD LENGTH PANEL ON THE INSIDE EDGE.

FOR SIGNS OVER 3000 mm IN HEIGHT, THE FULL HEIGHT MAY BE OBTAINED WITH PANELS HAVING A FACTORY SCARFED JOINT IN LIEU OF USING STANDARD LENGTH PANEL AS SHOWN.

THE MINIMUM SIZE PANEL IS 450 mm WIDE BY 1200 mm HIGH.

CONSTRUCT PLYWOOD SIGNS OF ONE PIECE OF PLYWOOD UNLESS THE PLANS SPECIFY OTHERWISE FOR SPECIAL DESIGN SIGNS.

ALL DIMENSIONS ARE MILLIMETERS (mm) UNLESS OTHERWISE NOTED.

DETAILED DRAWING	
REFERENCE STANDARD SPEC. SECTION 619.704	DWG. NO. 619-06
PLYWOOD SHEET INCREMENT GUIDE SIGN CONSTRUCTION DETAILS	
EFFECTIVE: FEBRUARY 2005	
serving you with pride	MONTANA DEPARTMENT OF TRANSPORTATION

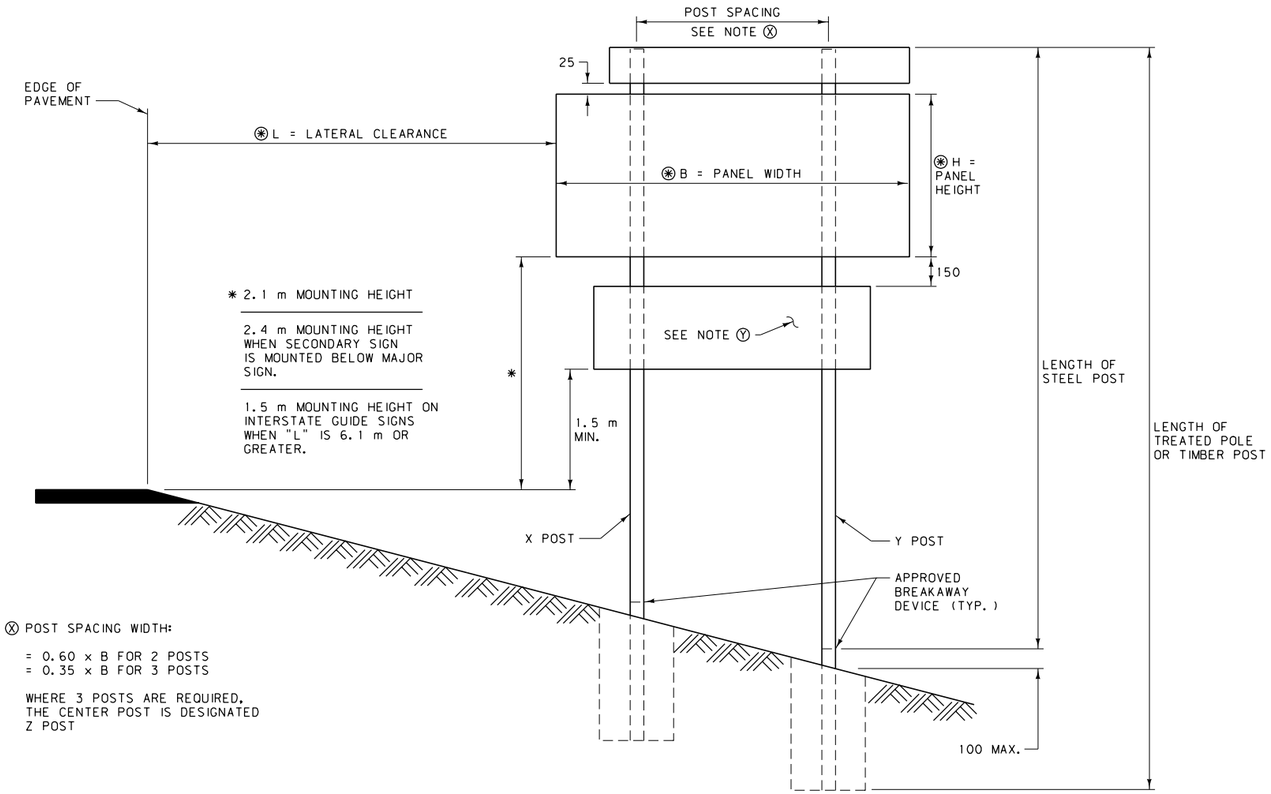

Ⓧ POST SPACING WIDTH:

= 0.60 x B FOR 2 POSTS
= 0.35 x B FOR 3 POSTS

WHERE 3 POSTS ARE REQUIRED, THE CENTER POST IS DESIGNATED Z POST

MOUNTING DETAILS

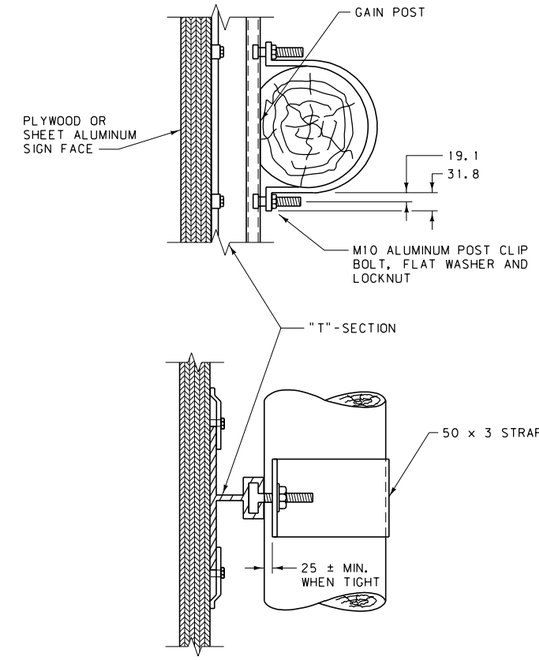

TREATED POLE

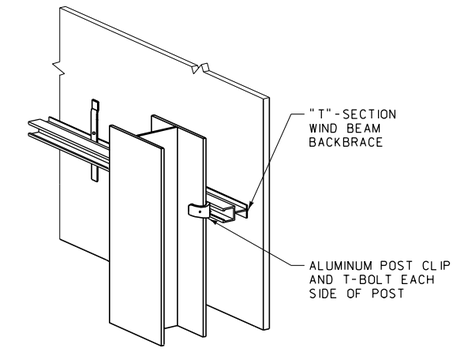

STEEL POST

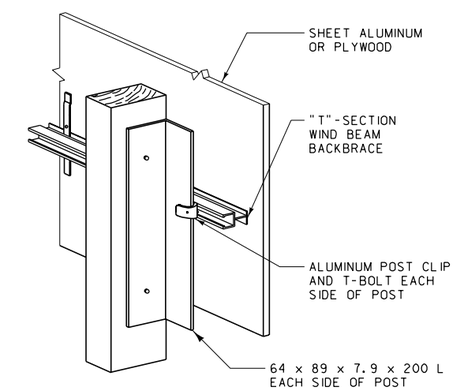

TREATED TIMBER POST

NOTES:

MOUNTING SYSTEMS SHOWN ARE TYPICAL. OTHER SYSTEMS MAY BE APPROVED BY THE ENGINEER.

ALL STEEL HARDWARE MUST BE GALVANIZED, STAINLESS, OR CADMIUM PLATED.

GAIN THE TOP HALF OF WOOD POLES ACCORDING TO THE TABLE ON DTL. DWG. NO. 619-20.

SEE THE SIGNING QUANTITIES FOR THE TYPES OF POSTS AND FOUNDATIONS.

MOUNT ONE-PANEL PLYWOOD SIGNS DIRECTLY TO WOOD POLES OR POSTS, WHEN SPECIFIED IN THE PLANS, BY BOLTING THROUGH THE SIGN PLATE AND THE POLE WITH CADMIUM PLATED BOLTS AS REQUIRED BY THE DETAILED DRAWINGS, SPECIFICATIONS AND DESIGN. USE "T"-SECTION WIND BEAMS WHEN REQUIRED BY DTL. DWG. NO. 619-06.

Ⓨ SUSPEND LARGE SUPPLEMENTAL SIGNS, ADDED AFTER INITIAL SIGN INSTALLATION, FROM MAJOR SIGN PANEL OR BACKBRACING. ATTACHMENT TO MULTIPLE POSTS/POLES IS NOT ALLOWED.

USE POST SPACING, POST SIZE AND BREAKAWAY DEVICES SPECIFIED IN THE PLANS AND IN THE SPECIFICATIONS. FOR INFORMATION REGARDING APPROPRIATE BREAKAWAY DEVICES FOR NEW INSTALLATIONS NOT SUPPORTED BY THE PLANS, CONTACT THE TRAFFIC UNIT.

IN LOCATING SIGNS, AVOID PLACING POSTS IN DITCH BOTTOMS WHERE THEY WOULD IMPEDE DRAINAGE.

⊛ DIMENSIONS ARE SPECIFIED IN THE SIGNING PLANS.

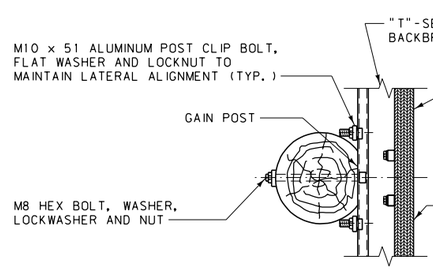

DOUBLE POLE MOUNT

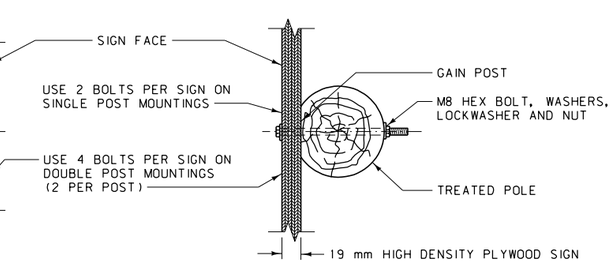

TREATED POLE
SINGLE OR DOUBLE
(USED WHEN "T"-BAR WIND BEAMS NOT REQUIRED)

ALL DIMENSIONS ARE MILLIMETERS (mm) UNLESS OTHERWISE NOTED.

DETAILED DRAWING	
REFERENCE STANDARD SPEC. SECTION 619.704	DWG. NO. 619-08
GUIDE SIGN CLEARANCE AND MOUNTING DETAILS	
EFFECTIVE: FEBRUARY 2005	
serving you with pride	MONTANA DEPARTMENT OF TRANSPORTATION

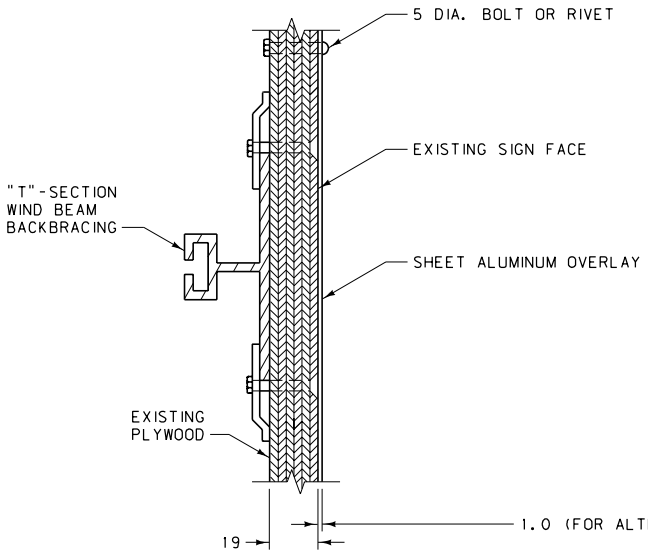

EXISTING PLYWOOD SIGNS

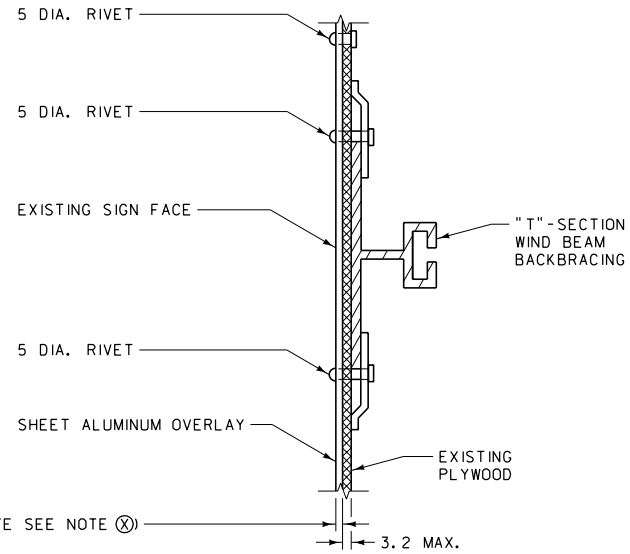

EXISTING ALUMINUM SIGNS

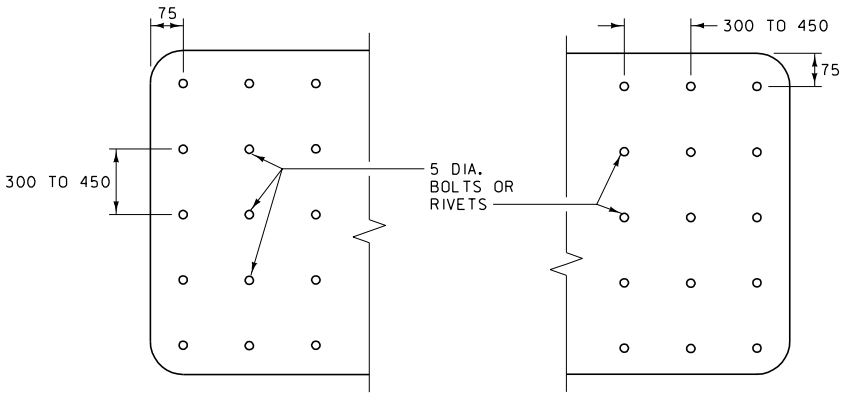

FASTENER PATTERN

NOTES:

REMOVE ALL RAISED LETTERS, NUMERALS, SYMBOLS, BORDERS AND PREVIOUS SIGN OVERLAYS TO BE REPLACED, AND CLEAN SIGN FACE TO A SMOOTH SURFACE BEFORE OVERLAYING.

ALL LETTERS, NUMERALS, SYMBOLS AND BORDERS ARE TYPE "C" CUTOUT UNLESS OTHERWISE SPECIFIED, AND APPLIED TO THE BACK-GROUND SHEETING PRIOR TO FIELD APPLICATION OF THE SIGN.

THE SIZE OF ALL GUIDE SIGN OVERLAYS AND LEGENDS MUST BE VERIFIED BY THE ENGINEER PRIOR TO FABRICATION.

Ⓧ AN ADHESIVE-BACKED SHEETING MAY BE USED AS AN ALTERNATIVE ON SIGN WIDTHS OF 1800 mm OR LESS IF IT IS PREFABRICATED TO A MINIMUM THICKNESS OF 0.13 mm AND CONSTRUCTED OF PREAPPLIED REFLECTIVE SHEETING ON ADHESIVE-BACKED ALUMINUM. APPLY ADHESIVE-BACKED OVERLAY SHEETING WHEN AIR AND SURFACE TEMPERATURES ARE ABOVE 10°C. DO NOT USE THIS TYPE OF OVERLAY MATERIAL ON OVERHEAD SIGNS.

PROVIDE A MINIMUM REFLECTIVE SHEETING INTENSITY OF ENGINEERING GRADE, MEETING THE REQUIREMENTS OF THE STANDARD SPECIFICATIONS, UNLESS SPECIFIED OTHERWISE.

APPLY ALL MATERIALS IN ACCORDANCE WITH THE MANUFACTURER'S SPECIFICATIONS AND RECOMMENDATIONS.

SEE THE STANDARD SPECIFICATIONS FOR ADDITIONAL REQUIREMENTS.

USE ALUMINUM ALLOY TYPE 6061-T6 OR AA5052-H38. CONVERSION COAT ALL ALUMINUM WITH A PROCESS SUCH AS ALODINE 1200 (OR EQUAL), AND RINSE AND DRY THOROUGHLY. PROTECT IT FROM SOIL BY ACCEPTABLE METHODS.

SIGN OVERLAYS MAY REQUIRE REMOVAL OF THE SIGN FROM THE POSTS TO AVOID PROJECTING BOLT HEADS. DO NOT LEAVE WARNING AND REGULATORY SIGNS TO BE OVERLAYED UNDISPLAYED FOR MORE THAN ONE (1) HOUR DURING DAYLIGHT. DO NOT LEAVE GUIDE SIGNS UNDISPLAYED FOR MORE THAN TEN (10) HOURS DURING DAYLIGHT. INSURE SIGNS TO BE OVERLAYED ARE OPERATIONAL PRIOR TO DARKNESS.

OVERLAY SIGNS SMALLER THAN 1200 mm x 1800 mm WITH ONE PANEL OF MATERIAL. FOR SEAMS IN LARGE OVERLAYS, USE RIVETS OR BOLTS SPACED AS SHOWN ON THIS DRAWING AND PLACE PARALLEL TO AND NO MORE THAN 75 mm LATERALLY FROM THE SEAM.

ALL DIMENSIONS ARE MILLIMETERS (mm) UNLESS OTHERWISE NOTED.

DETAILED DRAWING	
REFERENCE STANDARD SPEC. SECTION 619	DWG. NO. 619-10
SHEET ALUMINUM OVERLAY	
EFFECTIVE: FEBRUARY 2005	
serving you with pride	MONTANA DEPARTMENT OF TRANSPORTATION

NOTES:

USE TUBULAR POSTS FOR SINGLE POST MOUNTED SIGNS ONLY.

BOLT WITH HEX HEAD, HEX NUT AND 3 WASHERS EACH LOCATION. SEE TABLE FOR BOLT DIAMTER AND TORQUE. SEE PROCEDURE FOR BASE CONNECTION ASSEMBLY.

ALL BOLTS ARE ASTM A 325M.

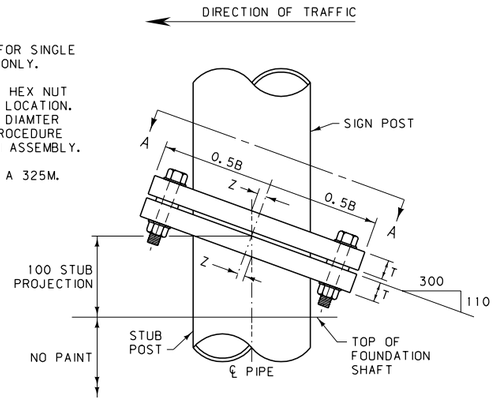

SIGN POST AND STUB POST DETAILS

SECTIONS SHOWN ARE FOR INSTALLATION ON RIGHT SHOULDER AND IN GORE. PLATE SLOT BEVELS ARE OPPOSITE HAND FROM THAT SHOWN FOR INSTALLATIONS ON LEFT SHOULDER.

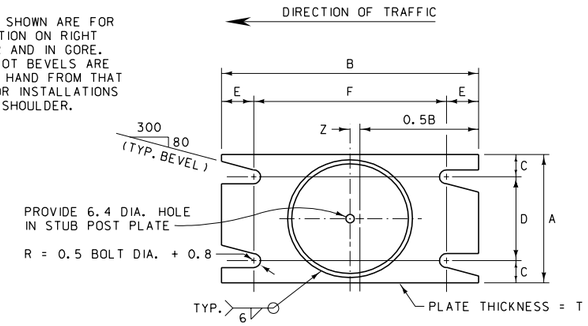

SECTION A-A

BASE PLATE DETAIL

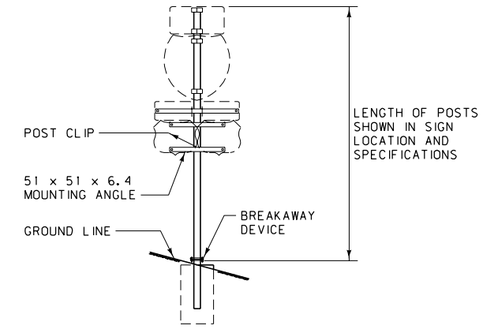

TYPICAL SIGN ELEVATION

FOR DETAILS OF MOUNTING ANGLES SEE DETAILED DRAWING NUMBER 619-16 AND BELOW.

PROCEDURE FOR BASE CONNECTION ASSEMBLY

1. ASSEMBLE POST TO STUB WITH BOLTS AND ONE FLAT WASHER BETWEEN PLATES.
2. SHIM AS REQUIRED TO PLUMB POST.
3. TIGHTEN BOLTS IN A SYSTEMATIC ORDER TO THE PRESCRIBED TORQUE (SEE TABLE BELOW).
4. LOOSEN EACH BOLT AND RETIGHTEN TO PRESCRIBED TORQUE IN THE SAME ORDER AS ORIGINAL TIGHTENING. DO NOT OVERTIGHTEN.
5. BURR THREADS AT JUNCTION WITH NUT USING A CENTER PUNCH TO PREVENT NUT LOOSENING.

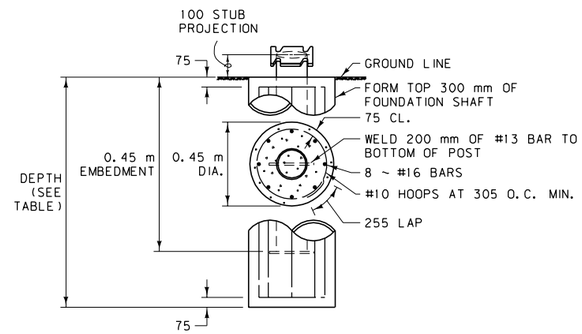

FOUNDATION SHAFT DETAIL

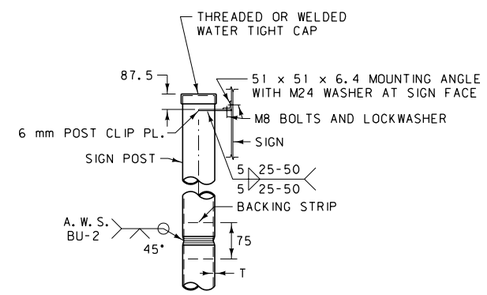

TYPICAL SPLICE

BACKING STRIP THICKNESS = T OR 8 mm MAX. LOCATE SPLICE IN TOP ONE-HALF OF POST.

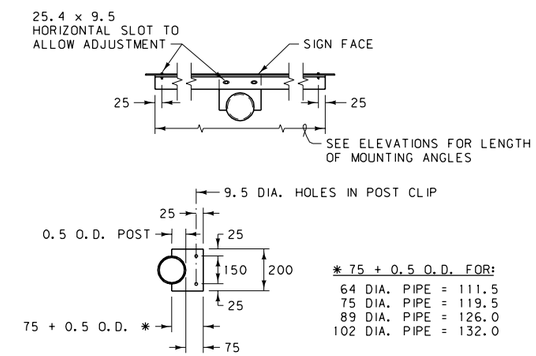

✱ 75 + 0.5 O.D. FOR:

64 DIA. PIPE = 111.5
75 DIA. PIPE = 119.5
89 DIA. PIPE = 126.0
102 DIA. PIPE = 132.0

POST CLIP DETAILS

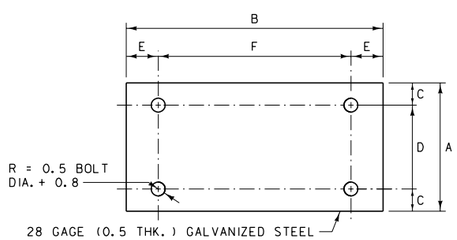

KEEPER PLATE DETAIL

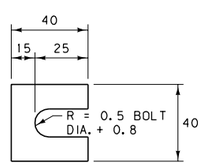

FURNISH TWO 0.3 mm ± THICK AND TWO 0.8 mm ± THICK SHIMS PER POST. USE SHIMS FABRICATED FROM BRASS SHIM STOCK OR STRIP CONFORMING TO ASTM B 36M.

SHIM DETAIL

BASE CONNECTION DATA											FOUNDATION	
NOMINAL PIPE DIA.	BOLT SIZE	BOLT TORQUE	A	B	C	D	E	F	T	Z	FOOTING DIAMETER	FOOTING DEPTH
75	M12 x 63	27 N·m	115	190	25.8	63.4	19.1	151.8	19	8	0.45 m	0.9 m
89 & 102	M12 x 63	27 N·m	140	215	25.6	88.8	18.6	177.8	19	8	0.45 m	0.9 m
127	M16 x 83	54 N·m	165	250	31.7	101.6	23.4	203.2	25	10	0.45 m	1.2 m
152	M20 x 89	88 N·m	190	285	31.5	127.0	25.0	235.0	25	10	0.45 m	1.4 m

NOTES:

USE STEEL PIPE CONFORMING TO THE REQUIREMENTS OF ASTM A 53, TYPE E OR S, GRADE B OR A 500, GRADE B.

USE CLASS "A" OR "D" CONCRETE WITH A WOOD FLOAT FINISH ON TOP. FORM TOP 300 mm OF FOUNDATION.

SEE THE STANDARD SPECIFICATIONS FOR REQUIREMENTS GOVERNING STRUCTURAL STEELS AND THEIR FABRICATION.

SUBMIT SHOP PLANS FOR APPROVAL PRIOR TO FABRICATION.

FOR SIGN PLACEMENT AND DETAILS SEE THE SIGNING DETAILED DRAWINGS.

GALVANIZE PIPE AS PER AASHTO M 111.

EXCEPT AS OTHERWISE APPROVED BY THE ENGINEER, PAINT STRUCTURAL STEEL WITH ONE SHOP COAT AND ONE FIELD COAT OF ZINC RICH BASED PAINT AND ONE FIELD COAT OF ALUMINUM PAINT AS SPECIFIED IN THE STANDARD SPECIFICATIONS, ON ALL SURFACES NOT IN CONTACT WITH THE CONCRETE.

FRANGIBLE BOLT BREAKAWAY SYSTEMS APPROVED BY FHWA ARE ALLOWED TO BE USED IN PLACE OF THE DESIGN SHOWN HERE AS AN EQUAL OPTION (PER ENGINEER'S APPROVAL).

TABLE OF WEIGHTS		
NOMINAL PIPE DIA.	NOMINAL WEIGHT (kg/m) OF PIPE	WEIGHT OF EACH BREAKAWAY DEVICE & STUB POST (kg)
75	11.28	12.71
89	13.56	16.26
102	16.06	17.44
127	21.76	27.90
152	28.23	36.99

ALL DIMENSIONS ARE MILLIMETERS (mm) UNLESS OTHERWISE NOTED.

DETAILED DRAWING

REFERENCE STANDARD SPEC. SECTION 556, 619, 704

DWG. NO. 619-12

TUBULAR SIGN POST DETAILS

EFFECTIVE: FEBRUARY 2005

MDT serving you with pride — MONTANA DEPARTMENT OF TRANSPORTATION

BASE CONNECTION DATA											FUSE PLATE DATA										FOUNDATION DATA				
POST SIZE mm x kg/m	BOLT SIZE	BOLT TORQUE	DIMENSIONS							BREAKAWAY DEVICE (kg)	DIMENSIONS								BOLT DIA.	FUSE DEVICE (kg)	FTG. DEPTH	STUB LENGTH	FTG. DIA.	BAR C SIZE	STUB POST (kg)
			A	B	C	D	E	t_1	W		F	G	H	J	K	L	N	t_3							
W100 x 19 M100 x 19.3	M16 x 70	54 N·m	215	125	18.6	69.8	27.6	19	8	9.79	95	50.8	28.2	100	57.2	21.4	16.0	10	M16	0.73	1.1 m	600	0.45 m	#16	11.79
W200 x 27			320	160	20.3	101.6	29.2	19	8	16.78	115	63.5	31.5	135	69.8	32.6	20.0	13	M20	1.48	1.7 m	750	0.60 m	#22	20.41
W200 x 36	M20 x 89	88 N·m	330	190	19.0	127.0	31.5	25	8	27.61	120	63.5	36.5	150	88.8	30.6	20.0	14	M20	2.11	2.1 m	900	0.60 m	#29	32.66
W310 x 45			430	190	21.3	127.0	31.5	25	8	35.63	135	76.2	38.8	165	88.8	38.1	22.0	14	M22	2.46	2.4 m	900	0.75 m	#29	40.82
S75 x 8	M12 x 63	27 N·m	205	75	20.0	38.0	18.5	16	6	4.70	80	38.1	29.9	65	38.0	13.5	12.0	6	M12	0.29	1.1 m	450	0.45 m	#13	3.88
S100 x 11			205	75	20.0	38.0	18.5	16	6	4.74	80	38.1	29.9	65	38.0	13.5	12.0	6	M12	0.29	1.1 m	450	0.45 m	#13	5.24
S130 x 15	M16 x 70	54 N·m	240	100	18.4	50.8	24.6	19	6	8.65	80	38.1	29.9	75	47.6	13.7	12.0	6	M12	0.30	1.1 m	450	0.45 m	#16	6.80

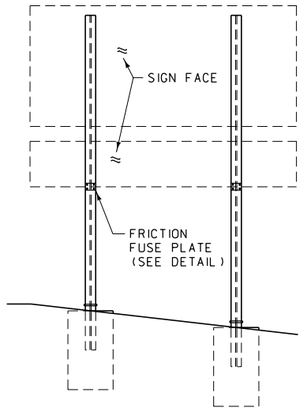

TYPICAL SIGN ELEVATION

PROCEDURE FOR BASE CONNECTION ASSEMBLY

1. ASSEMBLE POST TO STUB WITH BOLTS AND ONE FLAT WASHER BETWEEN PLATES.
2. SHIM AS REQUIRED TO PLUMB POST.
3. TIGHTEN BOLTS IN A SYSTEMATIC ORDER TO THE PRESCRIBED TORQUE (SEE TABLE).
4. LOOSEN EACH BOLT AND RETIGHTEN TO PRESCRIBED TORQUE IN THE SAME ORDER AS ORIGINAL TIGHTENING. DO NOT OVERTIGHTEN.
5. BURR THREADS AT JUNCTION WITH NUT USING A CENTER PUNCH TO PREVENT NUT LOOSENING.

NOTE:
ALL BOLTS MUST BE ASTM A 325M AND BE TIGHTENED BY USE OF A DIRECT TENSION INDICATING DEVICE (LOAD INDICATING WASHER) IN ACCORDANCE WITH THE MANUFACTURER'S SPECIFICATIONS.

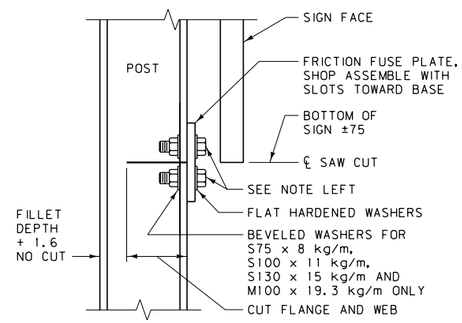

FRICTION FUSE PLATE DETAIL

DO NOT USE ON SINGLE POST SIGNS

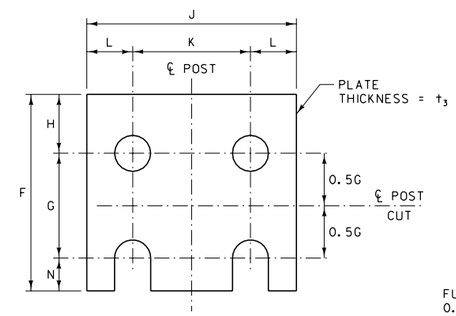

HOLE DIAMETER = BOLT DIA. + 1.6

FRICTION FUSE PLATE DETAIL

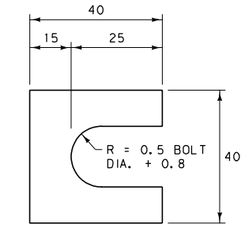

FURNISH TWO 0.3 mm ± THICK AND TWO 0.8 mm ± THICK SHIMS PER POST. USE SHIMS FABRICATED FROM BRASS SHIM STOCK OR STRIP CONFORMING TO ASTM B 36M.

SHIM DETAIL

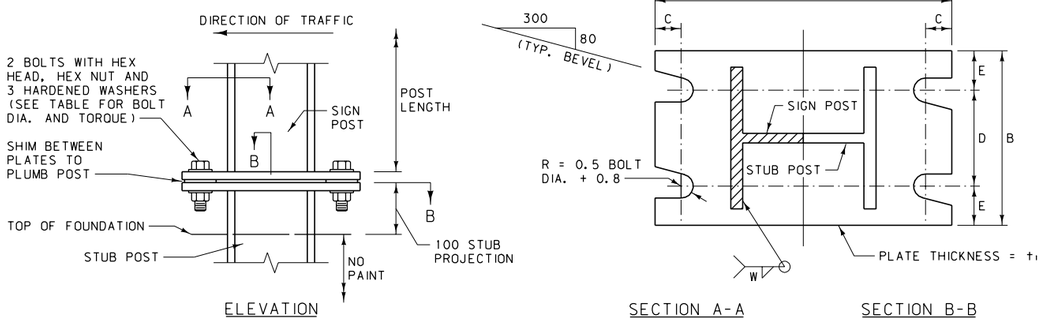

ELEVATION SECTION A-A SECTION B-B

SIGN POST AND STUB POST DETAIL "A"

NOTE:
SECTIONS SHOWN ARE FOR INSTALLATIONS ON RIGHT SHOULDER AND IN GORE. PLATE SLOT BEVELS ARE OPPOSITE HAND FROM THAT SHOWN FOR INSTALLATIONS ON LEFT SHOULDER.

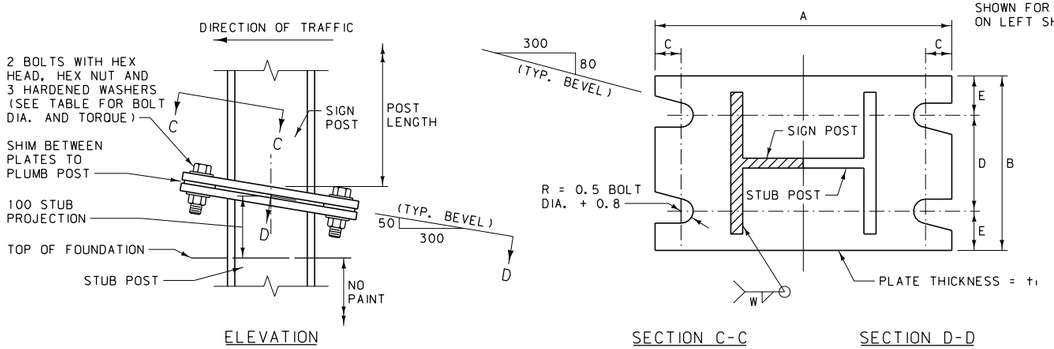

ELEVATION SECTION C-C SECTION D-D

SIGN POST AND STUB POST DETAIL "B"

USE ONLY WITH SINGLE POST SIGNS

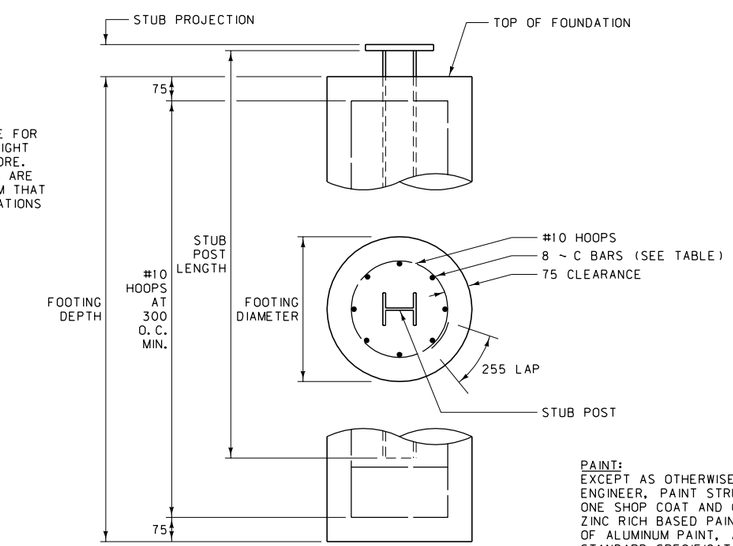

FOUNDATION DETAIL

NOTES:

USE CLASS "A" OR "D" CONCRETE WITH A WOOD FLOAT FINISH ON TOP. FORM TOP 300 mm OF FOUNDATION.

SEE THE STANDARD SPECIFICATIONS FOR REQUIREMENTS GOVERNING STRUCTURAL STEELS AND THEIR FABRICATIONS. TO AVOID OVERSIGHT, NOTE THESE REQUIREMENTS ON THE SHOP DRAWINGS.

SUBMIT SHOP PLANS FOR APPROVAL BEFORE FABRICATION IS BEGUN.

THE WEIGHT OF STEEL POSTS IS COMPUTED BY TAKING THE LENGTH OF THE POST TIMES THE NOMINAL WEIGHT PER METER PLUS THE WEIGHT OF THE BREAKAWAY DEVICE, FUSE DEVICE AND STUB POST AS SHOWN IN THE TABLE.

FOR GUIDE SIGN PLACEMENT AND DETAILS, SEE SIGNING DTL. DWG. NO. 619-08.

FRANGIBLE BOLT BREAKAWAY SYSTEMS APPROVED BY FHWA ARE ALLOWED TO BE USED IN PLACE OF THE DESIGN SHOWN HERE AS AN EQUAL OPTION (PER ENGINEER'S APPROVAL).

PAINT:
EXCEPT AS OTHERWISE APPROVED BY THE ENGINEER, PAINT STRUCTURAL STEEL WITH ONE SHOP COAT AND ONE FIELD COAT OF ZINC RICH BASED PAINT AND ONE FIELD COAT OF ALUMINUM PAINT, AS SPECIFIED IN THE STANDARD SPECIFICATIONS, ON ALL SURFACES NOT IN CONTACT WITH CONCRETE.

ALL DIMENSIONS ARE MILLIMETERS (mm) UNLESS OTHERWISE NOTED.

DETAILED DRAWING

REFERENCE STANDARD SPEC. SECTION 619

DWG. NO. 619-13

BREAKAWAY AND FOUNDATION DETAILS FOR MULTIPLE GUIDE SIGN SUPPORTS

EFFECTIVE: FEBRUARY 2005

MDT serving you with pride — MONTANA DEPARTMENT OF TRANSPORTATION

SIGNS WITHOUT BACKBRACING

(SEE PLANS FOR BACKBRACING REQUIREMENTS)

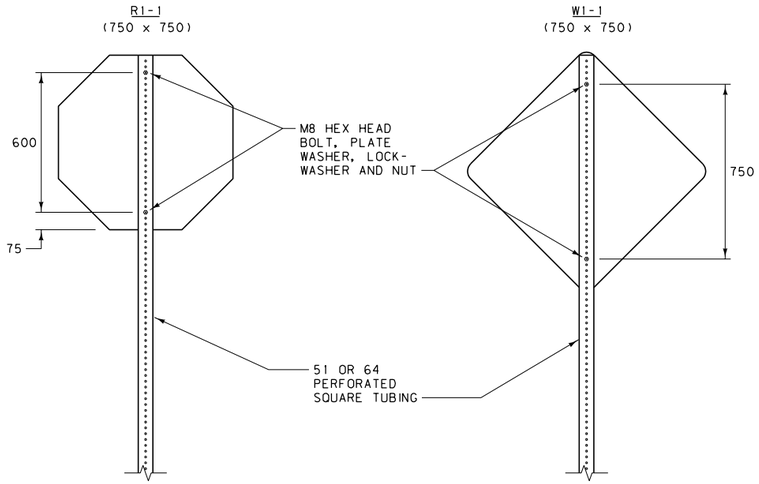

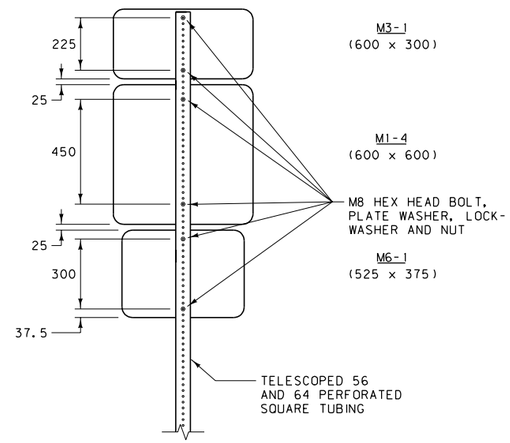

STREET NAME SIGN INSTALLATION

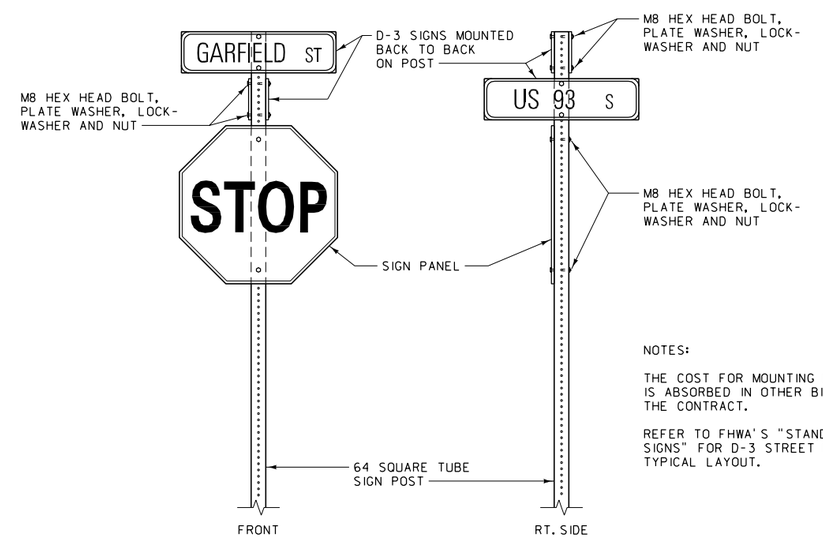

NOTES:

THE COST FOR MOUNTING D-3 SIGNS IS ABSORBED IN OTHER BID ITEMS OF THE CONTRACT.

REFER TO FHWA'S "STANDARD HIGHWAY SIGNS" FOR D-3 STREET NAME SIGN TYPICAL LAYOUT.

SIGNS WITH BACKBRACING

(SEE PLANS FOR BACKBRACING REQUIREMENTS)

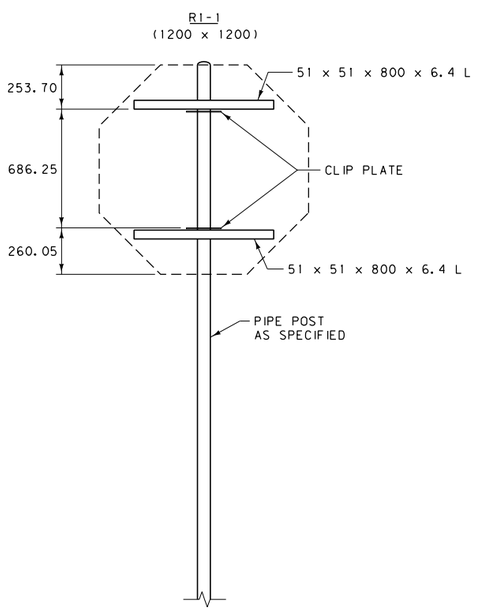

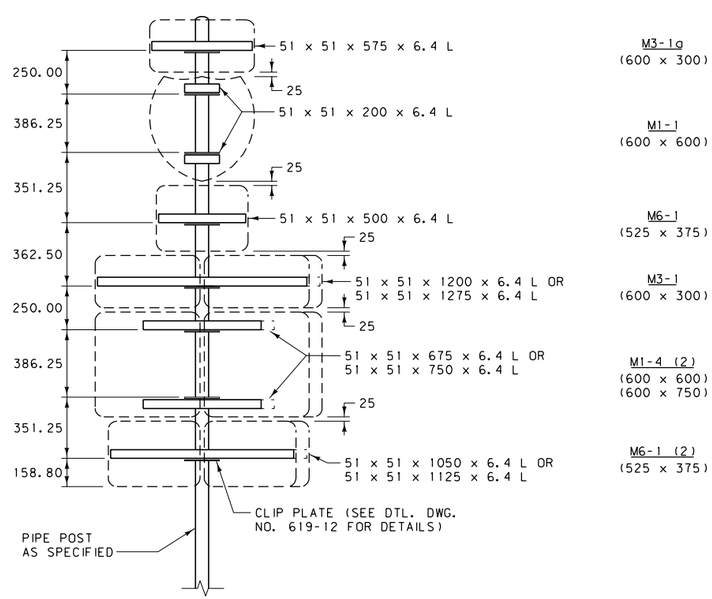

TYPICAL MOUNTING DETAILS

(FOR 75 mm DIA. AND LARGER PIPE)

ELEVATION

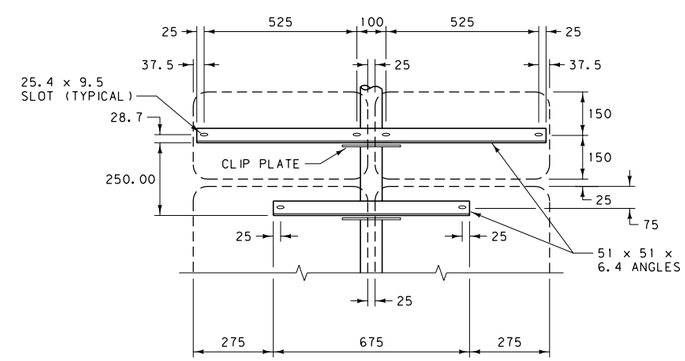

PLAN VIEW

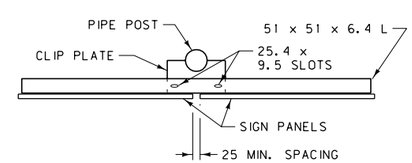

NOTES:

VERTICAL DIMENSIONS SHOWN ARE FROM TOP TO TOP OF ALL POST CLIP PLATES.

PLACE A SUITABLE WATERTIGHT CAP ON TOP OF ALL PIPE POSTS.

CONFORM MATERIAL USED IN FABRICATION OF POST CLIPS AND ANGLE BRACKETS TO SECTION 556 OF THE STANDARD SPECIFICATIONS.

THE LENGTH OF EACH ANGLE BRACKET DEPENDS ON THE MOUNTING ASSEMBLY AND HOLE SPACING OF EACH SIGN. THE ASSEMBLIES SHOWN ARE TYPICAL INSTALLATIONS. ERECT SIMILAR ASSEMBLIES IN A LIKE MANNER.

REFER TO FHWA'S "STANDARD HIGHWAY SIGNS" FOR STANDARD HOLE SPACING IN SIGNS.

ALL DIMENSIONS ARE MILLIMETERS (mm) UNLESS OTHERWISE NOTED.

DETAILED DRAWING	
REFERENCE STANDARD SPEC. SECTION 556, 619, 704	DWG. NO. 619-16
TYPICAL STEEL POST MOUNTING DETAILS	
EFFECTIVE: FEBRUARY 2005	
serving you with pride — MONTANA DEPARTMENT OF TRANSPORTATION	

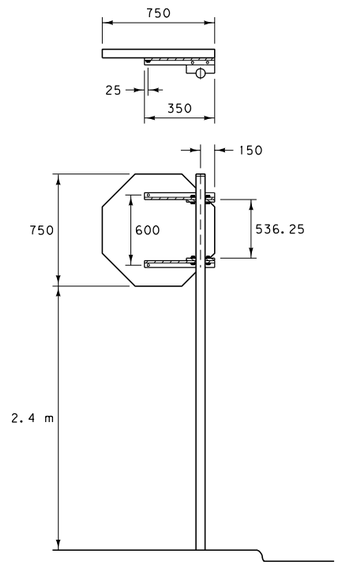

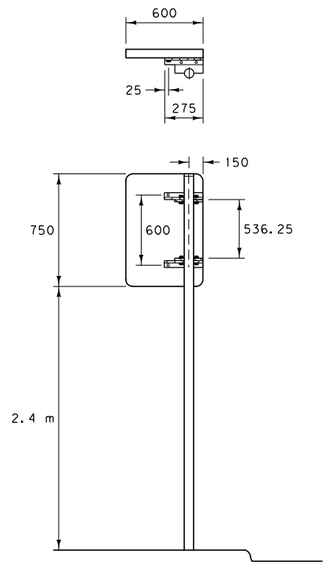

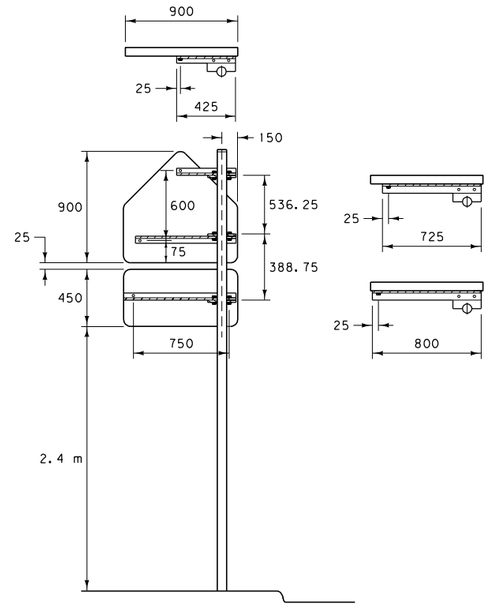

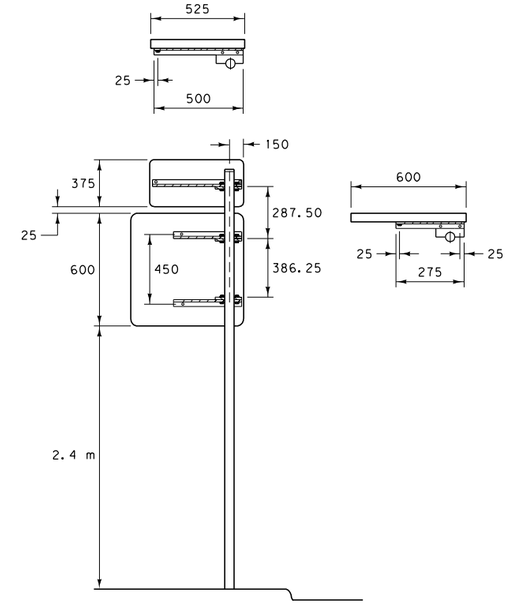

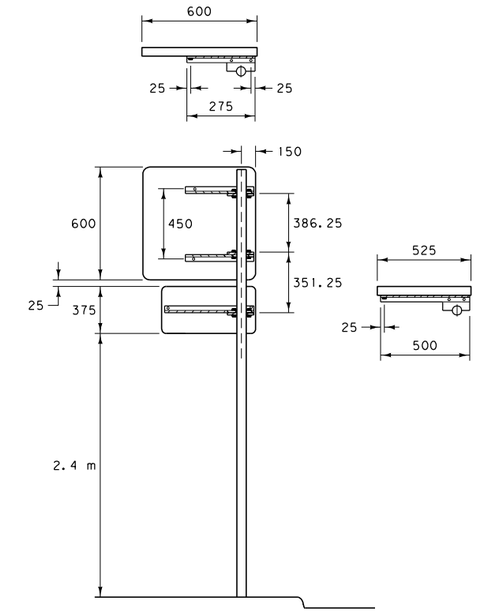

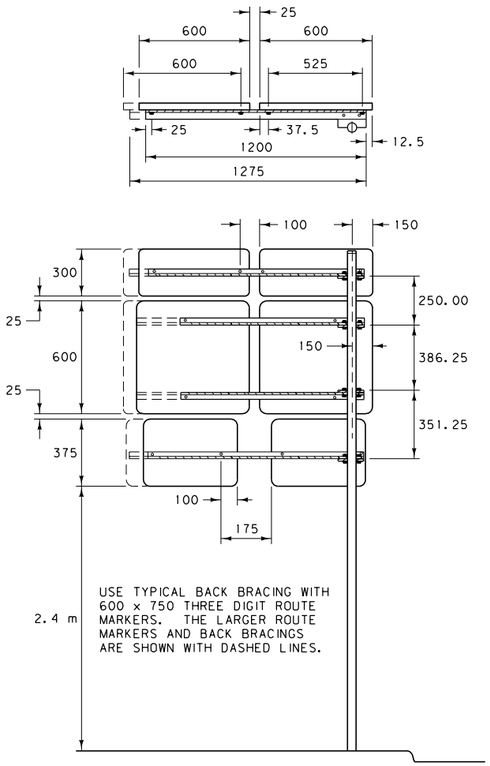

USE TYPICAL BACK BRACING WITH 600 x 750 THREE DIGIT ROUTE MARKERS. THE LARGER ROUTE MARKERS AND BACK BRACINGS ARE SHOWN WITH DASHED LINES.

NOTE:
ALTERNATE MOUNTING MUST BE APPROVED BY THE ENGINEER.

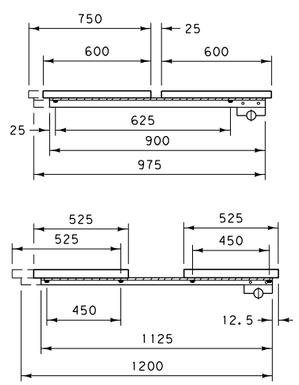

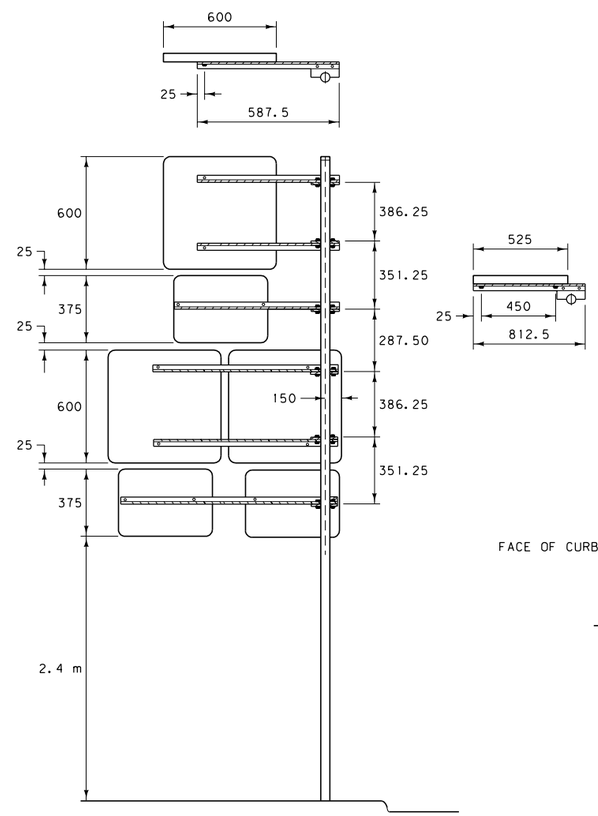

NOTES:

REFER TO FHWA'S MANUAL "STANDARD HIGHWAY SIGNS" FOR STANDARD HOLE SPACING IN SIGNS.

USE POST CLIPS AS SHOWN IN SIGNING DETAILED DRAWING NO. 619-12 WHEN CANTILEVER MOUNTING IS NECESSARY.

USE POSTS ONE SIZE LARGER THAN THOSE REQUIRED FOR STANDARD MOUNTINGS.

DIMENSIONS FOR POST CLIP SPACING ARE SHOWN TO THE TOP OF EACH CLIP.

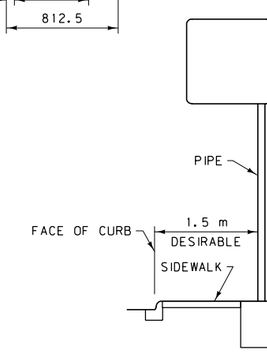

ALTERNATE A

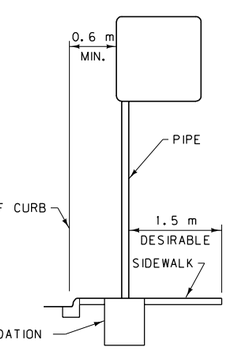

ALTERNATE B

USE THE STANDARD TYPE MOUNTING BEHIND SIDEWALKS IF R/W LIMITS PERMIT. IF R/W DOES NOT PERMIT, THEN ALTERNATE A SHOULD BE USED BEHIND SIDEWALKS OR IN THE SIDEWALK NEXT TO A BUILDING. IF CONDITIONS ARE SUCH THAT THE SIGN CANNOT BE MOUNTED ON THE BACKSIDE OF THE SIDEWALK THEN USE ALTERNATE B.

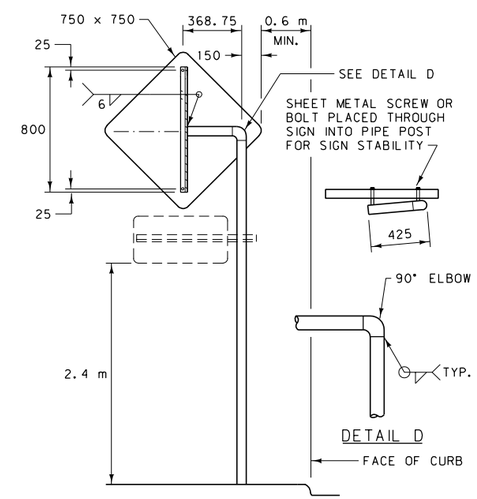

DETAIL C

ALL DIMENSIONS ARE MILLIMETERS (mm) UNLESS OTHERWISE NOTED.

DETAILED DRAWING	
REFERENCE STANDARD SPEC. SECTION 556, 619, 704	DWG. NO. 619-18
CANTILEVER TYPE SIGN SUPPORT DETAILS FOR SIDEWALK AREAS	
EFFECTIVE: FEBRUARY 2005	
serving you with pride	MONTANA DEPARTMENT OF TRANSPORTATION

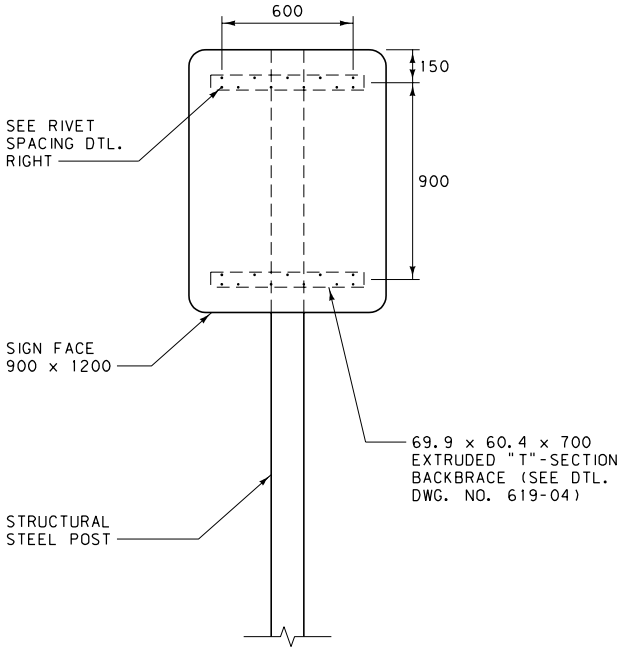

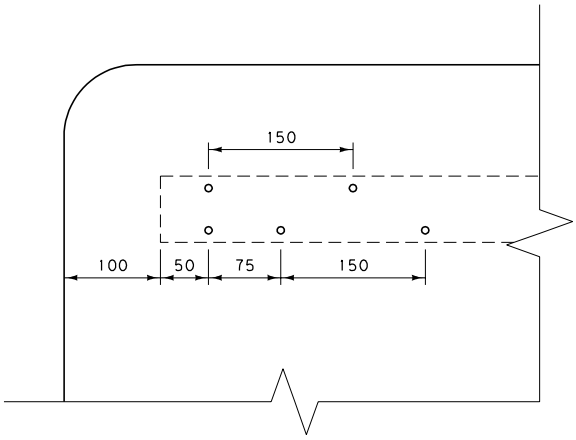

RIVET SPACING

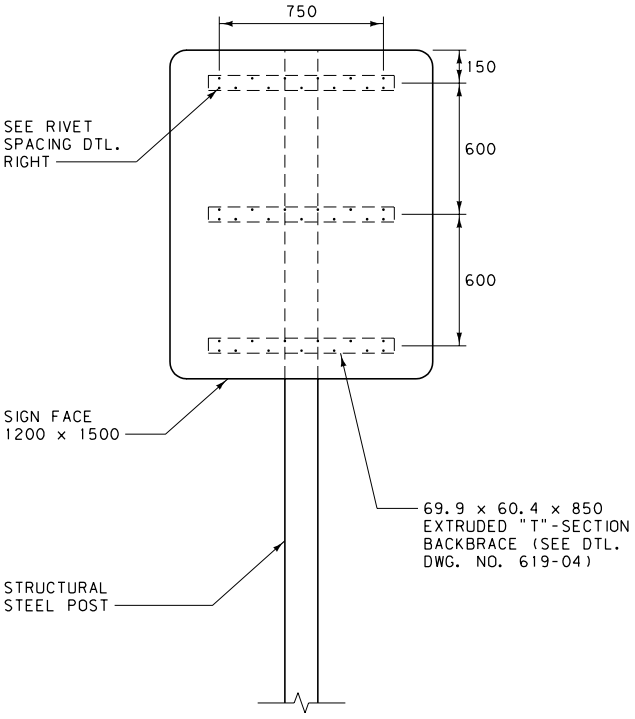

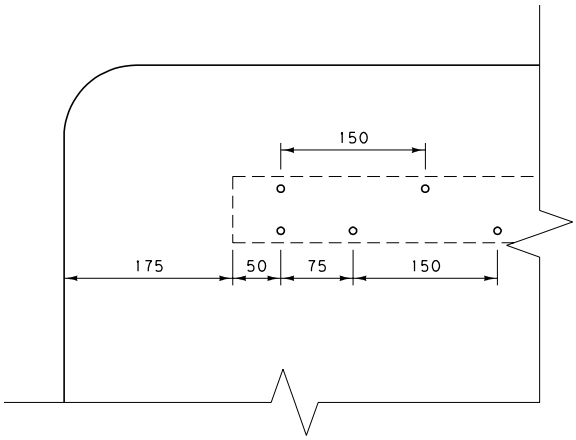

RIVET SPACING

ALL DIMENSIONS ARE MILLIMETERS (mm) UNLESS OTHERWISE NOTED.

NOTE:
SEE THE PLANS FOR BACKBRACING REQUIREMENTS.

DETAILED DRAWING	
REFERENCE STANDARD SPEC. SECTION 619, 704	DWG. NO. 619-19
STRUCTURAL STEEL POST SIGN MOUNTING DETAILS	
EFFECTIVE: FEBRUARY 2005	
serving you with pride	MONTANA DEPARTMENT OF TRANSPORTATION

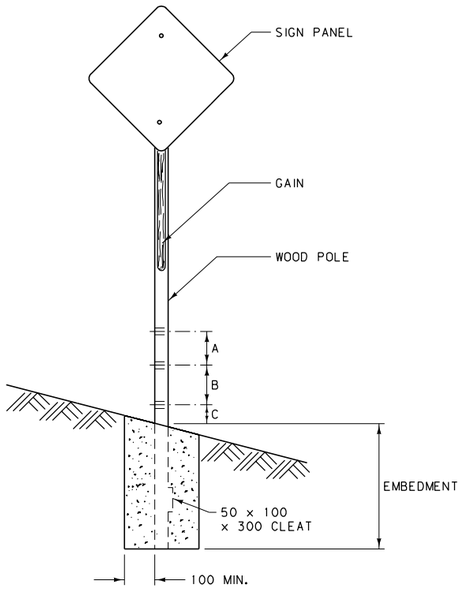

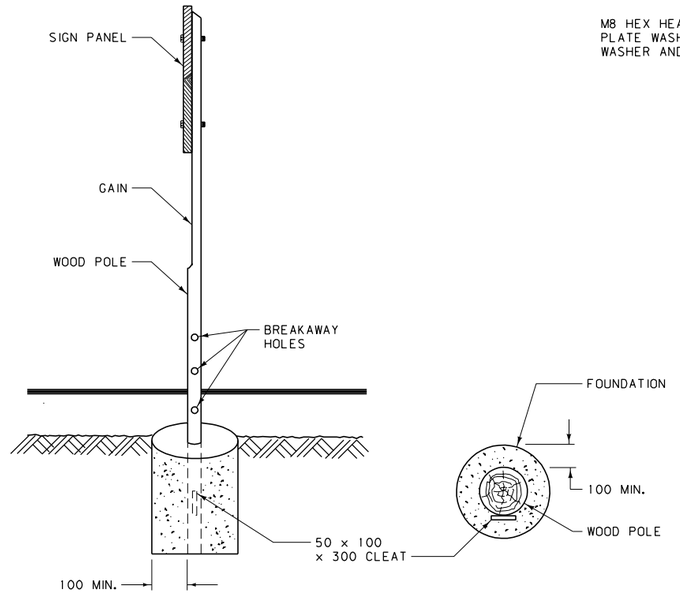

BREAKAWAY AND FOOTING DETAILS

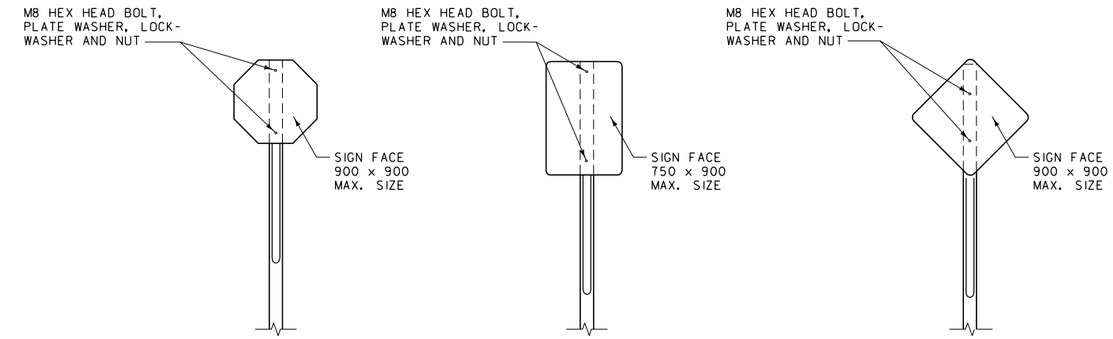

REGULATORY SIGNS

WARNING SIGNS

TYPICAL SIGN MOUNTINGS

(NO BACKBRACING)

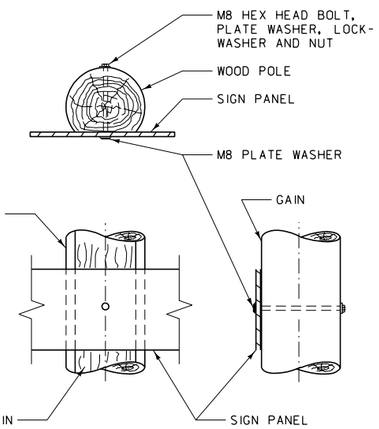

SIGN MOUNTING DETAIL

NOTES:

CONFORM ALL WOOD POLES TO THE REQUIREMENTS OF SECTION 704 OF THE STANDARD SPECIFICATIONS.

GAIN ALL POLES ON THE SIGN SIDE THE MINIMUM WIDTH SHOWN IN THE TABLE, FOR HALF THE LENGTH OF EACH POLE.

BREAKAWAY DETAILS ARE STANDARD FOR ALL WOOD POLES LISTED IN THE TABLE, ON SINGLE AND MULTIPLE SIGN SUPPORTS.

ALL BOLTS, NUTS AND WASHERS MUST CONSIST OF ALUMINUM, STAINLESS STEEL OR CADMIUM PLATED STEEL MATERIAL.

ATTACH A 50 mm x 100 mm x 300 mm BOARD 300 mm FROM THE BOTTOM OF THE POLE TO PREVENT SPINNING. ATTACH THIS CLEAT BY DRIVING TWO 16d NAILS THROUGH THE CLEAT AND INTO THE POLE. TREAT THE 50 mm x 100 mm CLEAT ACCORDING TO THE STANDARD SPECIFICATIONS.

⊗ THE MAXIMUM CROSS-SECTIONAL AREA AT A POINT 100 mm ABOVE GROUND LEVEL MAY NOT EXCEED 15 480 SQUARE MILLIMETERS EXCLUSIVE OF DRILLED BREAKAWAY HOLES FOR UNPROTECTED POST INSTALLATIONS. THE HOLE DIAMETER MAY BE ENLARGED IF NECESSARY TO INSURE THIS REQUIREMENT IS MET.

USE SOIL CEMENT FOR THE FOUNDATION - SEE SECTION 619.03.3 OF THE STANDARD SPECIFICATIONS.

FOR SIGNS REQUIRING BACKBRACING, CONSULT DTL. DWG. NO. 619-21 AND 619-22 FOR BACKBRACING OPTIONS AND DETAILS.

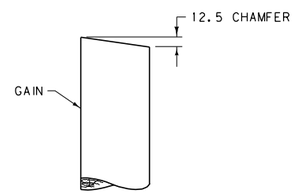

TOP END TREATMENT

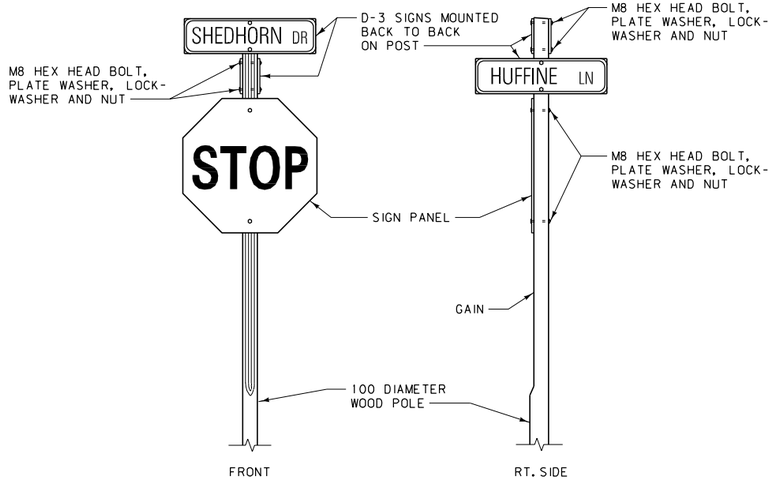

NOTES:

THE COST FOR MOUNTING D-3 SIGNS IS ABSORBED IN OTHER BID ITEMS OF THE CONTRACT.

REFER TO FHWA'S "STANDARD HIGHWAY SIGNS" FOR D-3 STREET NAME SIGN TYPICAL LAYOUT.

STREET NAME SIGN INSTALLATION

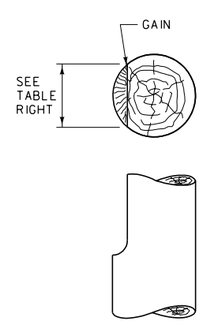

GAIN DETAIL

POLE SIZE	A	B	C	HOLE DIA. (SEE NOTE ⊗)	EMBEDMENT	GAIN
75 TOP DIA.	~	~	~	~	0.9 m	70
100 TOP DIA.	~	~	~	~	0.9 m	90
130 TOP DIA.	~	300	100	51	1.1 m	100
150 TOP DIA.	~	300	100	64	1.4 m	100
CLASS 4	~	300	100	51	1.5 m	100
CLASS 3	~	300	100	64	1.7 m	100
CLASS 2	150	150	100	51	1.8 m	100
CLASS 1	150	150	100	64	2.0 m	100

MUST BE PROTECTED OR OUT OF CLEAR ZONE

ALL DIMENSIONS ARE MILLIMETERS (mm) UNLESS OTHERWISE NOTED.

DETAILED DRAWING

REFERENCE STANDARD SPEC. SECTION 619, 704

DWG. NO. 619-20

TREATED WOOD POLE SIGN MOUNTING AND SUPPORT DETAILS

EFFECTIVE: FEBRUARY 2005

serving you with pride

MONTANA DEPARTMENT OF TRANSPORTATION

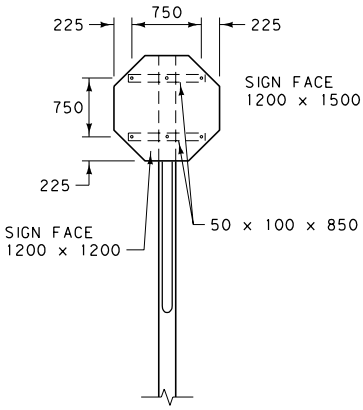

REGULATORY SIGNS

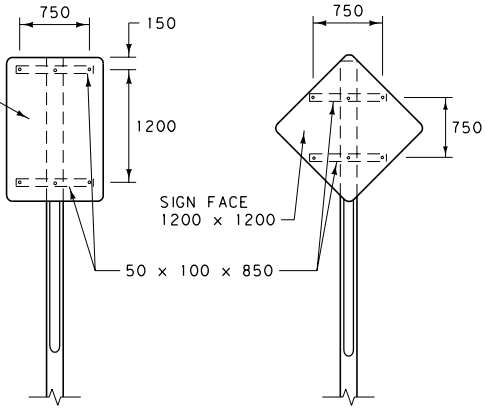

WARNING SIGNS

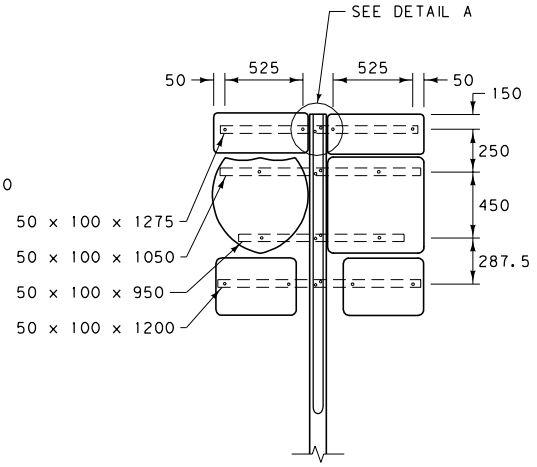

ROUTE MARKER ASSEMBLY

NOTE:

SIGNS OF THESE SIZES AND LARGER REQUIRE WOOD BACKBRACING.

SMALLER SIGNS MAY REQUIRE BACKBRACING IF THE CONDITIONS WARRANT (SEE SIGNING PLANS). IN THIS CASE, THE CONTRACTOR HAS THE OPTION OF USING WOOD OR STEEL BACKBRACING (SEE DTL. DWG. NO. 619-22).

WOOD BACKBRACE INSTALLATIONS

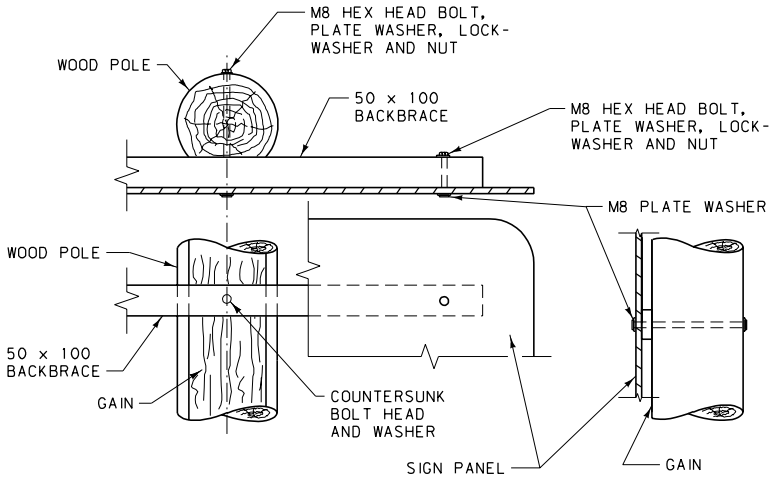

SIGN MOUNTING DETAIL

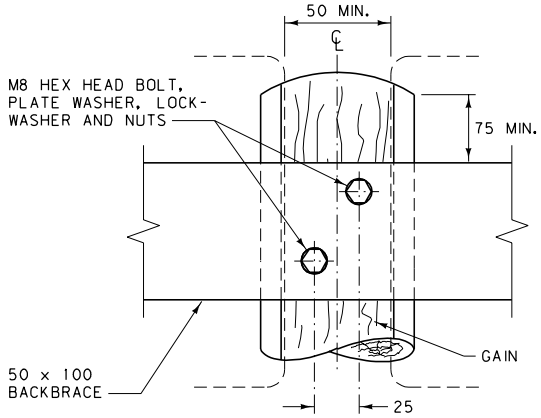

DETAIL A
(BACKBRACE)

NOTES:

CONFORM ALL WOOD POLES TO THE REQUIREMENTS OF SECTION 704 OF THE STANDARD SPECIFICATIONS.

GAIN ALL POLES ON THE SIGN SIDE THE MINIMUM WIDTH SHOWN IN THE TABLE ON DTL. DWG. NO. 619-20, FOR HALF THE LENGTH OF EACH POLE.

USE 50 mm x 100 mm S4S LUMBER FOR ALL WOOD BACK-BRACING, CONFORMING TO THE REQUIREMENTS OF SECTION 704 OF THE STANDARD SPECIFICATIONS.

ALL BOLTS, NUTS AND WASHERS MUST CONSIST OF ALUMINUM, STAINLESS STEEL OR CADMIUM PLATED STEEL MATERIAL.

SEE DTL. DWG. NO. 619-20 FOR BREAKAWAY AND SUPPORT DETAILS.

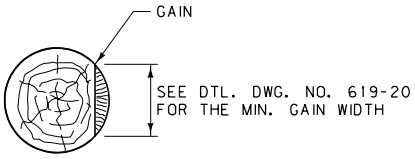

GAIN DETAIL

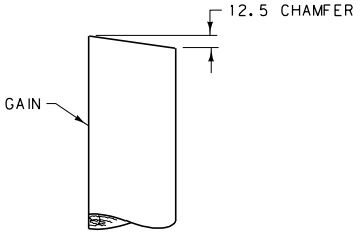

TOP END TREATMENT

ALL DIMENSIONS ARE MILLIMETERS (mm) UNLESS OTHERWISE NOTED.

DETAILED DRAWING	
REFERENCE STANDARD SPEC. SECTION 619, 704	DWG. NO. 619-21
TREATED WOOD POLE SIGN MOUNTING DETAILS	
EFFECTIVE: FEBRUARY 2005	

MDT serving you with pride — MONTANA DEPARTMENT OF TRANSPORTATION

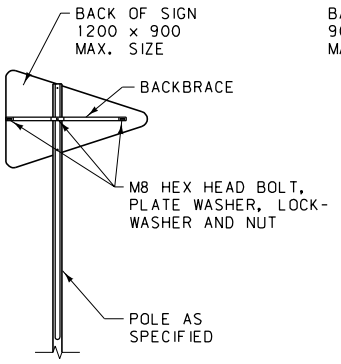

NO PASSING PENNANTS

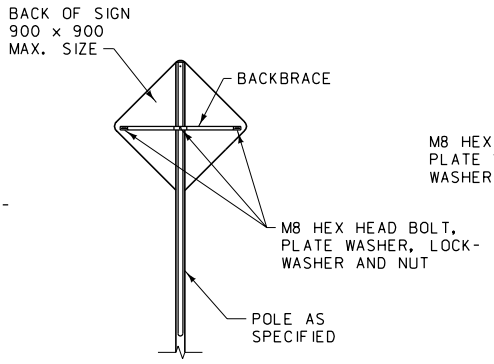

WARNING SIGNS

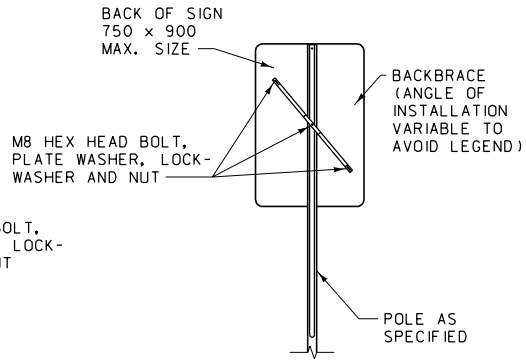

REGULATORY SIGNS

STEEL BACKBRACE INSTALLATIONS

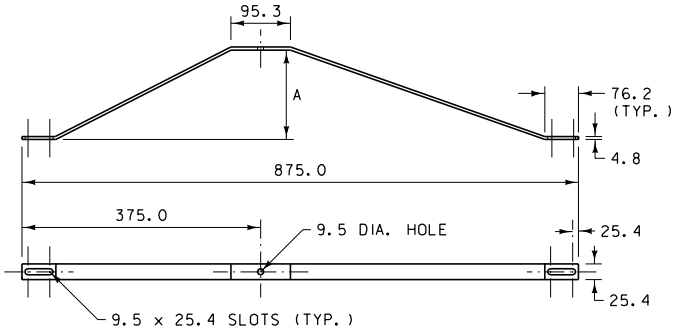

NO PASSING PENNANTS

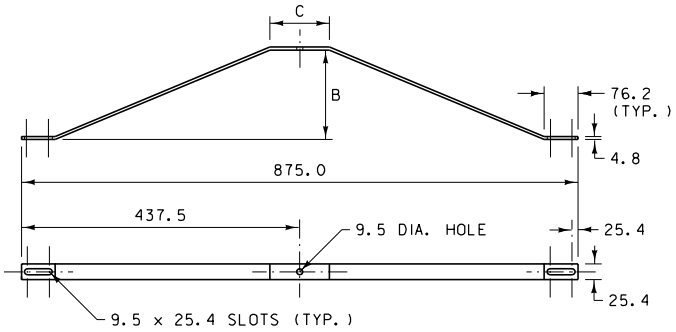

REGULATORY AND WARNING SIGNS

STEEL BACKBRACE DETAILS

POLE DIA.	A	B	C
75	54.0	54.0	95.3
100	76.2	76.2	95.3
130	~	101.6	108.0
150	~	133.4	108.0

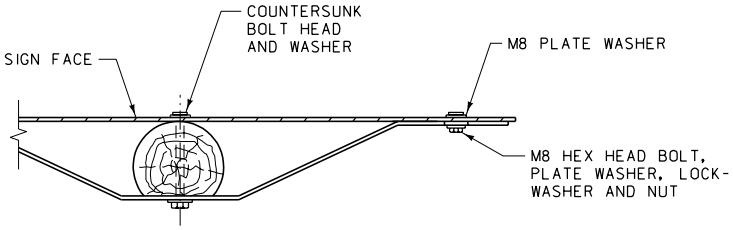

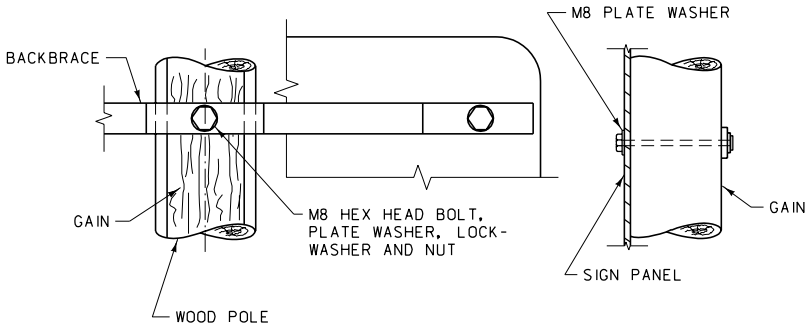

SIGN MOUNTING DETAIL

NOTES:

USE COMMERCIAL QUALITY, MILD STEEL, HOT-DIPPED AFTER FABRICATION. GALVANIZE ACCORDING TO THE SPECIFICATIONS OF AASHTO M 111.

SEE DTL. DWG. NO. 619-21 FOR APPLICATIONS OF THIS TYPE OF BRACE AND ADDITIONAL SIGN MOUNTING REQUIREMENTS.

SEE DTL. DWG. NO. 619-20 FOR BREAKAWAY AND SUPPORT DETAILS.

ALL DIMENSIONS ARE MILLIMETERS (mm) UNLESS OTHERWISE NOTED.

DETAILED DRAWING

REFERENCE
STANDARD SPEC.
SECTION 619

DWG. NO.
619-22

TREATED WOOD POLE
OPTIONAL BACKBRACE

EFFECTIVE: FEBRUARY 2005

serving you with pride

MONTANA DEPARTMENT OF TRANSPORTATION

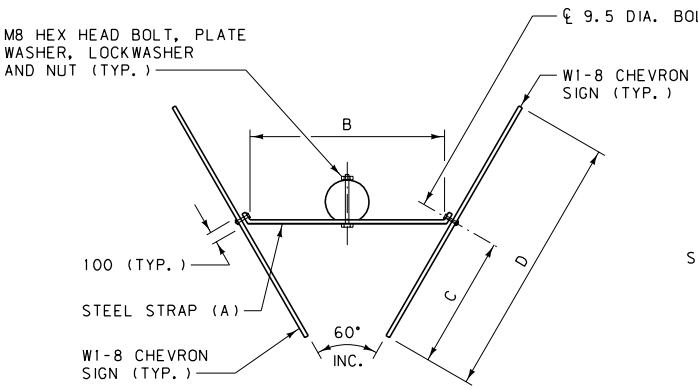

PLAN VIEW

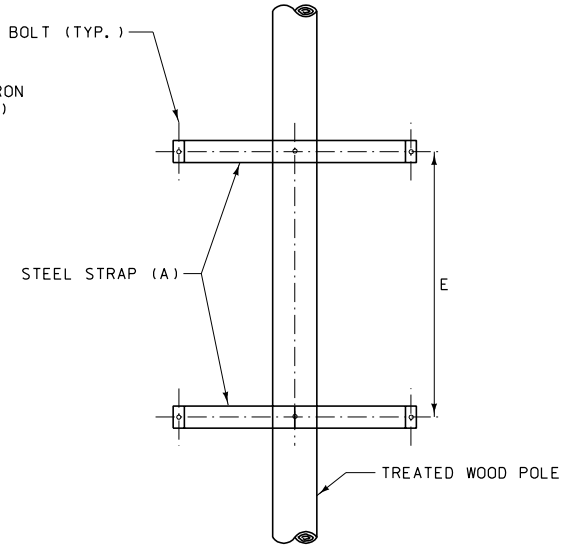

ELEVATION

SIGN SIZE	DIMENSIONS				
	A	B	C	D	E
450 x 600	6 x 50 x 580	380	225	450	450
600 x 750	6 x 50 x 655	455	300	600	600
750 x 900	6 x 50 x 735	535	375	750	750
900 x 1200	6 x 50 x 810	610	450	900	900

WOOD POST MOUNTING

MOUNT 2 CHEVRON SIGNS ON EACH POST WITH EACH PANEL ADJUSTED TO APPROXIMATE RIGHT ANGLE TO ROADWAY CENTERLINE. EXACT LOCATION AND ANGLE TO BE DETERMINED BY ENGINEER.

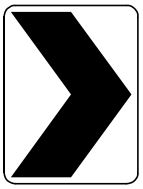

W1-8 CHEVRON ALIGNMENT SIGNS MAY BE USED AS AN ALTERNATE OR AS A SUPPLEMENT TO DELINEATION TO PROVIDE ADDITIONAL EMPHASIS AND GUIDANCE WHEN A CHANGE IN HORIZONTAL ALIGNMENT EXISTS IN THE ROADWAY.

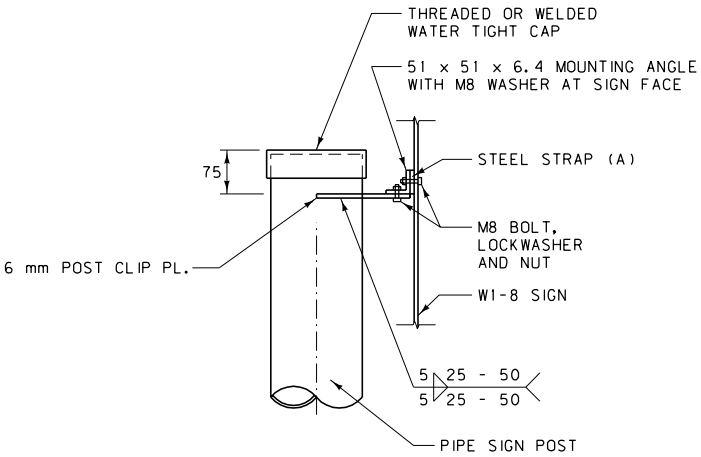

STEEL PIPE MOUNTING

NOTES:

INSTALL CHEVRONS WITH A MINIMUM 3.1 m HORIZONTAL CLEARANCE AND A 1.5 m VERTICAL MOUNTING HEIGHT.

SPACING FOR DESIGN PURPOSES IS DOUBLE THE SPACING SHOWN IN THE TABLE ON DTL. DWG. NO. 619-36, UP TO A MAXIMUM CHEVRON SPACING OF 60 m. A MINIMUM OF 3 VISIBLE CHEVRONS ARE REQUIRED THROUGH A CURVE.

FIELD INSPECT THE CHEVRONS AT NIGHT AND ADJUST THEIR LOCATIONS TO ACHIEVE 150 m OF VISIBILITY.

ALL DIMENSIONS ARE MILLIMETERS (mm) UNLESS OTHERWISE NOTED.

DETAILED DRAWING

REFERENCE STANDARD SPEC. SECTION 619

DWG. NO. 619-24

CHEVRON MOUNTING DETAILS

EFFECTIVE: FEBRUARY 2005

MDT serving you with pride — MONTANA DEPARTMENT OF TRANSPORTATION

PANELS

FOR USE ON ROUTE MARKER ASSEMBLIES

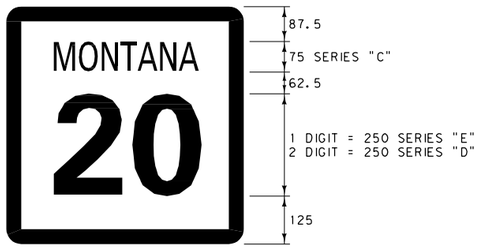

M1-5

600 x 600

MARGIN = NONE

BORDER = 37.5

CORNER RADIUS = 37.5

BLACK LEGEND AND BORDER ON A RETRO-REFLECTORIZED WHITE BACKGROUND.

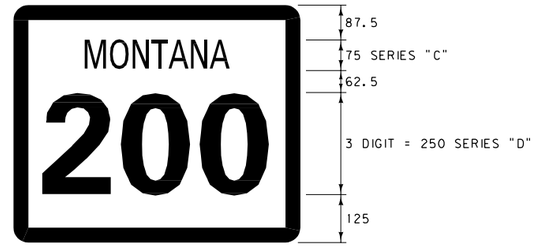

M1-5

750 x 600

MARGIN = NONE

BORDER = 37.5

CORNER RADIUS = 37.5

BLACK LEGEND AND BORDER ON A RETRO-REFLECTORIZED WHITE BACKGROUND.

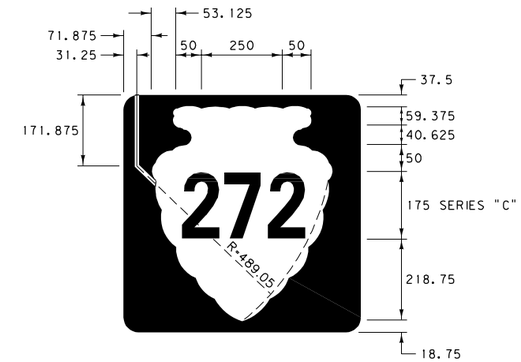

M1-10

600 x 600

MARGIN = NONE

BORDER = SEE DESIGN ABOVE

CORNER RADIUS = 37.5

BLACK LEGEND AND BORDER ON A RETRO-REFLECTORIZED WHITE BACKGROUND.

SHIELDS

FOR USE ON GUIDE SIGNS

SERIES "D" NUMERALS

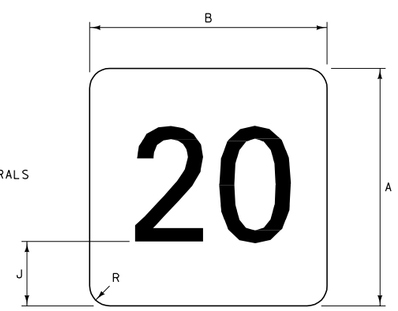

SERIES "C" NUMERALS

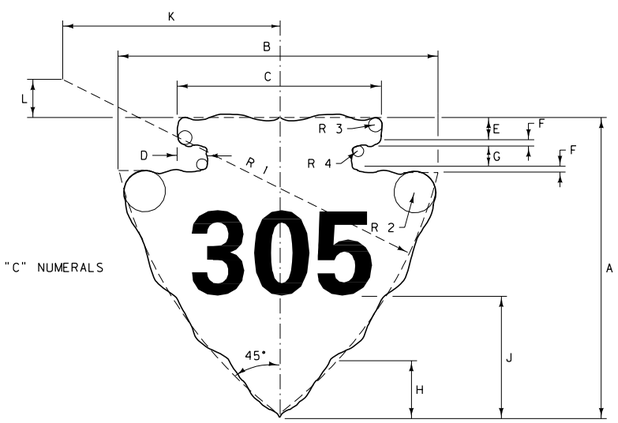

NOTES:

CENTER ALL NUMERALS USED ON PANELS AND SHIELDS OPTICALLY ABOUT VERTICAL CENTERLINE.

SEE SIGNS AND SIGNING MATERIALS CATALOG FOR COMPLETE LISTING OF SIGNS AND SIGN SIZES. DESIGNS ARE AVAILABLE FROM THE TRAFFIC UNIT FOR SIGNS UNIQUE TO MONTANA.

	250 mm NUMERALS		300 mm NUMERALS		450 mm NUMERALS	
	2 DIGIT	3 DIGIT	2 DIGIT	3 DIGIT	2 DIGIT	3 DIGIT
A	525	525	600	600	900	900
B	600	750	600	750	900	1125
J	150	150	162.5	162.5	237.5	237.5
R	37.5	37.5	50	50	62.5	62.5

BLACK LEGEND ON A RETRO-REFLECTORIZED WHITE BACKGROUND WITH NO BORDER.

													RADII			
		A	B	C	D	E	F	G	H	J	K	L	R 1	R 2	R 3	R 4
*	200 mm NUMERALS	650	700	462.5	65.625	75	7.8125	50	137.5	275	425	56.25	800	43.75	15.625	7.8125
**	250 mm NUMERALS	800	850	562.5	81.25	90.625	9.375	62.5	168.75	343.75	512.5	50	962.5	50	18.75	9.375
***	300 mm NUMERALS	1000	1050	700	100	112.5	12.5	75	210.9375	425	625	71.875	1200	62.5	25	12.5

BLACK LEGEND ON A RETRO-REFLECTORIZED WHITE BACKGROUND.

* USE WITH STANDARD 600 mm U.S. SHIELD.

** USE WITH STANDARD 750 AND 900 mm U.S. SHIELD.

*** USE WITH STANDARD 1050 mm U.S. SHIELD AND ALL INDEPENDENT USE.

ALL DIMENSIONS ARE MILLIMETERS (mm) UNLESS OTHERWISE NOTED.

DETAILED DRAWING

REFERENCE STANDARD SPEC. SECTION 619

DWG. NO. 619-26

SPECIAL DESIGN ROUTE MARKER PANELS AND SHIELDS

EFFECTIVE: FEBRUARY 2005

serving you with pride

MONTANA DEPARTMENT OF TRANSPORTATION

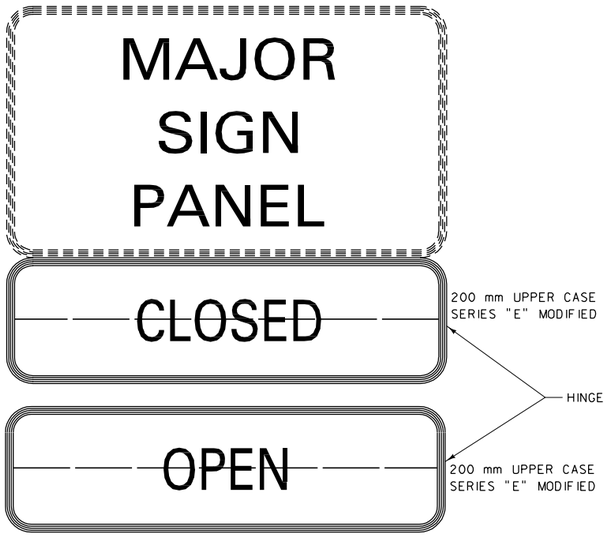

ALUMINUM SHEET MOUNTING

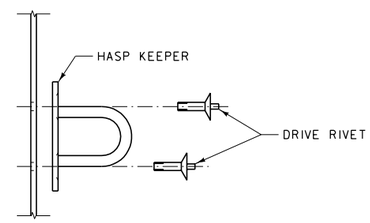

PLYWOOD MOUNTING

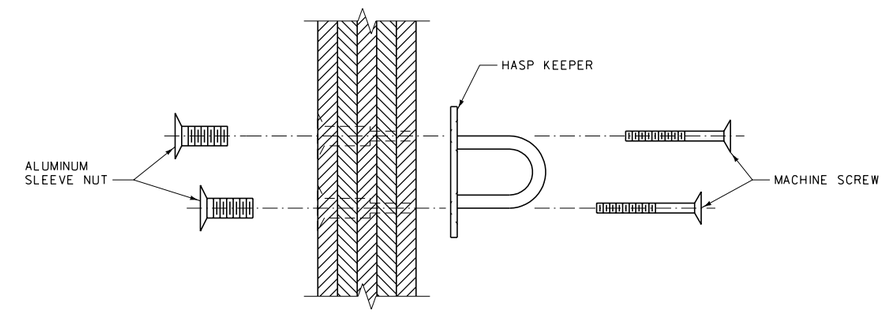

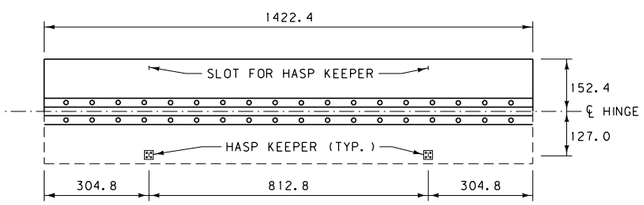

HINGE DETAIL
EXAMPLE

(1650 x 1200 D8-2A WEIGH STATION SIGN SHOWN)

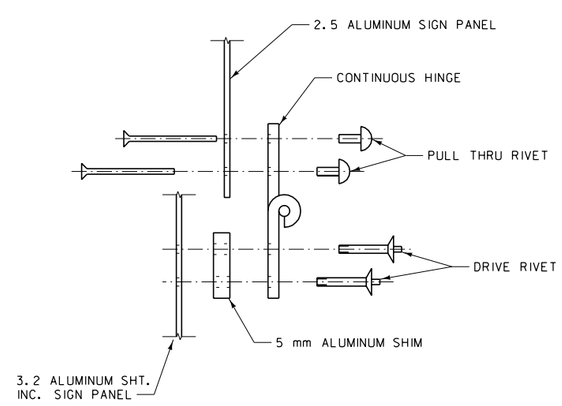

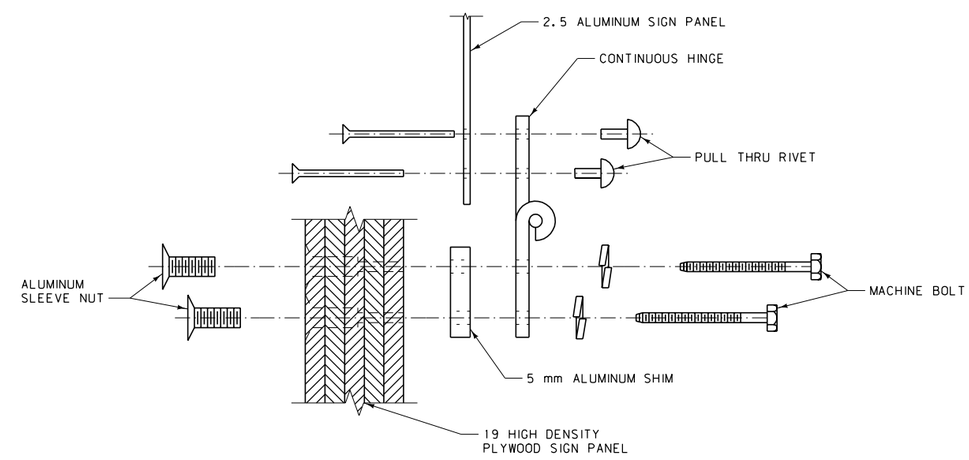

NOTES:

SEE SIGNS AND SIGNING MATERIALS CATALOG FOR COMPLETE LISTING OF SIGNS AND SIGN SIZES. DESIGNS ARE AVAILABLE FROM THE TRAFFIC UNIT FOR SIGNS UNIQUE TO MONTANA.

THE SIGN PANEL CONSISTS OF 19 mm HIGH DENSITY PLYWOOD OR 3.2 mm ALUMINUM SHEET INCREMENT AS SPECIFIED ON THE PLANS. THE HINGED PANEL CONSISTS OF 2.5 mm SHEET ALUMINUM.

PAINT ALL HARDWARE VISIBLE ON THE SIGN FACE OR COVER WITH RETRO-REFLECTIVE SHEETING, THE SAME COLOR AS THE SIGN.

SUBMIT SHOP DRAWINGS FOR APPROVAL PRIOR TO FABRICATION.

SUPPLEMENTAL SIGN PANEL BELOW MAJOR SIGN PANEL MUST HAVE RETRO-REFLECTORIZED LEGEND AND BACKGROUND MATCHING COLORS OF MAJOR PANEL.

THE MINIMUM MOUNTING HEIGHT TO THE BOTTOM OF THE SECONDARY PANEL IS 1.5 m.

ALL DIMENSIONS ARE MILLIMETERS (mm) UNLESS OTHERWISE NOTED.

DETAILED DRAWING	
REFERENCE STANDARD SPEC. SECTION 619.704	DWG. NO. 619-30
SIGN HINGE DETAILS	
EFFECTIVE: FEBRUARY 2005	
serving you with pride	MONTANA DEPARTMENT OF TRANSPORTATION

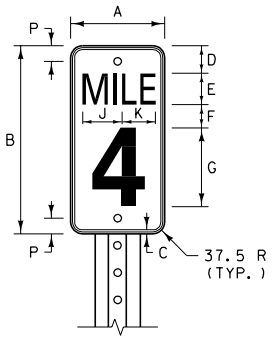

D10-1 AND D10-4

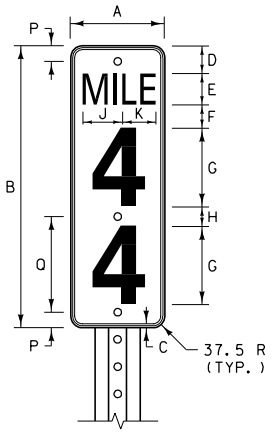

D10-2 AND D10-5

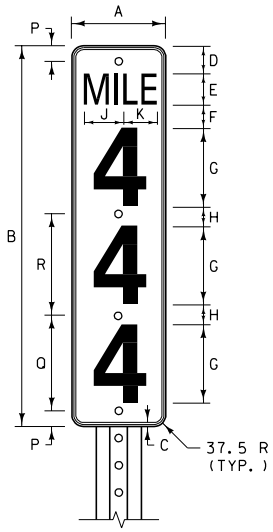

D10-3 AND D10-6

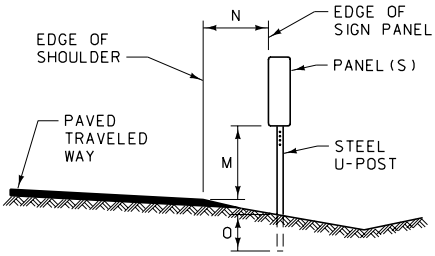

DIMENSION	INTERSTATE	NON-INTERSTATE
M	1.2 m	1.2 m
N	1.8 m	0.6 m TO 1.8 m ✱
O	0.6 m MIN.	0.6 m MIN.

✱ NORMALLY IN LINE WITH DELINEATORS

TYPICAL PLACEMENT

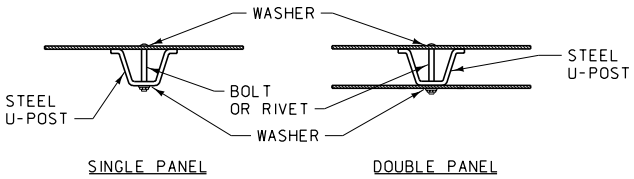

TYPICAL PANEL MOUNTING

PANEL DIMENSION INFORMATION

INTERSTATE			
DIMENSION	D10-4 (1 DIGIT)	D10-5 (2 DIGIT)	D10-6 (3 DIGIT)
A	300	300	300
B	600	900	1200
C	12.5	12.5	12.5
D	87.5	75	75
E	100 SERIES "C"	100 SERIES "C"	100 SERIES "C"
F	75	75	75
G ⊛	250 SERIES "C"	250 SERIES "C"	250 SERIES "C"
H	~	75	62.5
J	115	115	115
K	120	120	120
P	50	50	50
Q	~	325	300
R	~	~	325

NON-INTERSTATE			
DIMENSION	D10-1 (1 DIGIT)	D10-2 (2 DIGIT)	D10-3 (3 DIGIT)
A	250	250	250
B	450	675	900
C	12.5	12.5	12.5
D	50	50	50
E	100 SERIES "B"	100 SERIES "B"	100 SERIES "B"
F	50	50	50
G ⊛	150 SERIES "C"	150 SERIES "C"	150 SERIES "C"
H	~	75	75
J	90	90	90
K	95	95	95
P	37.5	37.5	37.5
Q	~	250	250
R	~	~	225

⊛ OPTICALLY CENTER DIGITS ON VERTICAL ℄ OF PANEL.

NOTES:

REFERENCE POST PANELS CONSIST OF A RETRO-REFLECTORIZED WHITE LEGEND AND BORDER ON A RETRO-REFLECTORIZED GREEN BACKGROUND.

MOUNT ALL REFERENCE POSTS ON STEEL U-POSTS (MIN. 3 kg/m) EXCEPT THE D10-6, WHICH IS MOUNTED ON A STEEL U-POST (MIN. 4.5 kg/m) AS NOTED IN THE SIGNING PLANS.

USE GALVANIZED OR CADMIUM PLATED M8 BOLT, NUT AND WASHER, AND JAM THREADS AFTER TIGHTENING. USE 8 mm DIA. ALUMINUM OR CADMIUM PLATED BOLT RIVETS OR PAINT RIVET HEADS WITH BRILLIANT GREEN SIGN ENAMEL.

DO NOT RELOCATE OR MOVE A REFERENCE POST ONCE IT HAS BEEN PROPERLY PLACED.

ALL DIMENSIONS ARE MILLIMETERS (mm) UNLESS OTHERWISE NOTED.

DETAILED DRAWING

REFERENCE
STANDARD SPEC.
SECTION 619

DWG. NO.
619-32

REFERENCE POST DETAILS

EFFECTIVE: FEBRUARY 2005

MDT serving you with pride

MONTANA DEPARTMENT OF TRANSPORTATION

DESIGN A USAGE:

USE FOR CONTINUOUS DELINEATION AND RT. SHOULDER OF ALL ROUTES.

DESIGN H USAGE:

USE ON LT. SHOULDER OF INTERSTATE ROUTES.

DESIGN B USAGE:

USE ON LT. SHOULDER OF INTERSTATE RAMPS.

DESIGN G USAGE:

USE ON RT. SHOULDER OF INTERSTATE RAMPS.

DESIGN J USAGE:

USE FOR TRUCK ESCAPE RAMPS ONLY.

DESIGN C USAGE:

USE FOR CURVES WITH RADII 170 m OR LESS, BOTH OUTSIDE AND INSIDE OF CURVE.

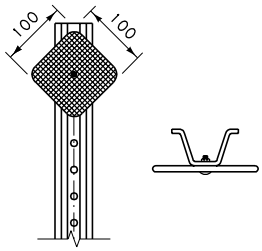

DESIGN A (WHITE)
DESIGN H (YELLOW)

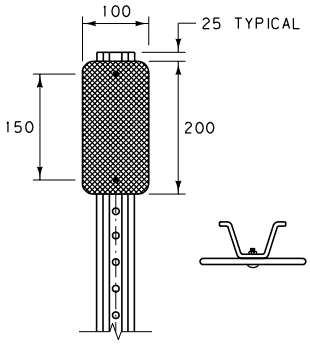

DESIGN B (YELLOW)
DESIGN G (WHITE)
DESIGN J (RED)

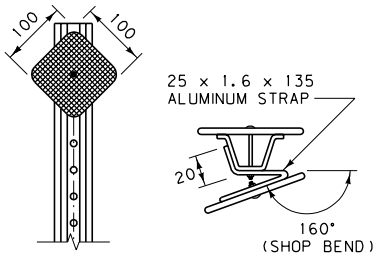

DESIGN C (WHITE)

DESIGN D USAGE:

NON-INTERSTATE ROUTES:
USE AT APPROACHES WITH STOP OR YIELD SIGNS.
INTERSTATE ROUTES:
USE FOR RAMP TERMINATION AT CROSS ROAD.

DESIGN E USAGE:

SPECIAL USE ONLY.
FORMERLY USED AT GORES AND ISLAND NOSES.

DESIGN F USAGE:

USE FOR CURVES WITH RADII GREATER THAN 170 m;
450 m TO 231 m RADIUS:
OUTSIDE ONLY.
230 m TO 171 m RADIUS:
OUTSIDE AND INSIDE OF CURVE.

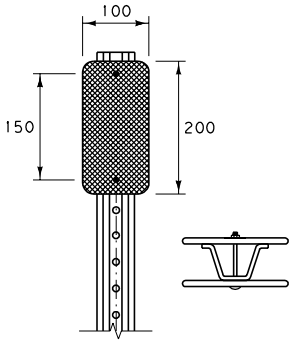

DESIGN D (YELLOW)

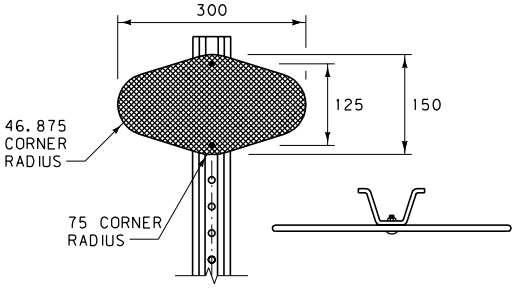

DESIGN E (YELLOW)

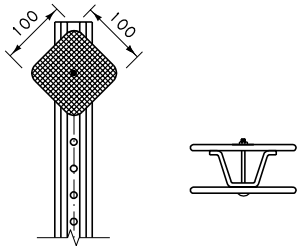

DESIGN F (WHITE)

DELINEATOR LEGEND	
DESIGN "A"	
DESIGN "B"	
DESIGN "C"	
DESIGN "D"	
DESIGN "E"	
DESIGN "F"	
DESIGN "G"	
DESIGN "H"	
DESIGN "J"	

NOTE:
SOME TYPICAL USES ARE SHOWN FOR EACH DESIGN. REFER TO THE MUTCD FOR SPECIFIC GUIDANCE.

ALL DIMENSIONS ARE MILLIMETERS (mm) UNLESS OTHERWISE NOTED.

DETAILED DRAWING

REFERENCE
STANDARD SPEC.
SECTION 619

DWG. NO.
619-34

DELINEATOR DETAILS

EFFECTIVE: FEBRUARY 2005

serving you with pride

MONTANA DEPARTMENT OF TRANSPORTATION

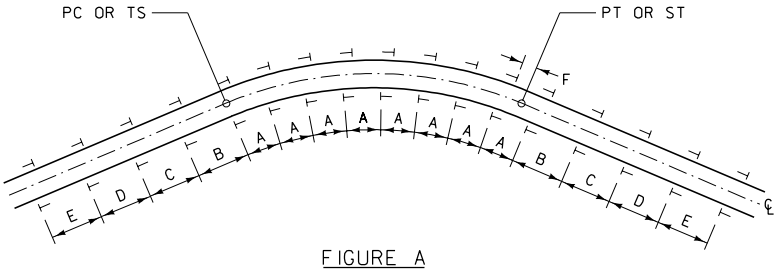

FIGURE A

SEE TABLE BELOW FOR SPACING VALUES

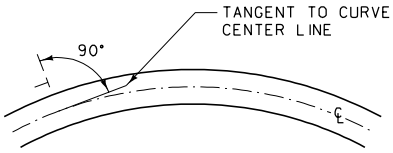

FIGURE B

HORIZONTAL CURVE SPACING TABLE					
RADIUS, m	SPACING ON CURVE, m	SPACING ON BOTH APPROACH TANGENTS, m			
	A	B	C	D	E
1750 & UP	90	120	120	120	120
900 - 1749	65	120	120	120	120
600 - 899	50	95	120	120	120
450 - 599	40	75	120	120	120
300 - 449	35	65	100	120	120
200 - 299	25	55	80	120	120
150 - 199	20	45	70	90	120
100 - 149	20	35	55	90	120
0 - 99	15	25	40	80	120

NOTES:

FURNISH RETRO-REFLECTIVE SHEETING ACCORDING TO THE STANDARD SPECIFICATIONS FOR RETRO-REFLECTIVE SHEETING B (HIGH INTENSITY). POSITION DELINEATOR FACES PERPENDICULAR TO TANGENT TO CENTERLINE OF CURVE AS SHOWN IN FIGURE B.

MOUNT DELINEATORS ON METAL U-POSTS (MIN. 1.7 kg/m) WITH 5 mm DIA. CADMIUM PLATED BOLT(S). DRILL OR PUNCH A MINIMUM OF TWELVE 9.5 mm MAXIMUM DIAMETER HOLES ON 25 mm CENTERS FROM THE TOP OF THE POST. 6.4 mm SQUARE HOLES MAY BE USED. IF SQUARE HOLES ARE USED, USE A LARGE HEADED BOLT OR AN APPROPRIATE WASHER. JAM THREADS AFTER TIGHTENING THE NUT TO PREVENT REMOVAL.

PLACE DELINEATORS AT A CONSTANT CLEARANCE DISTANCE FROM THE EDGE OF THE PAVEMENT EXCEPT WHERE GUARDRAIL OR OTHER OBSTRUCTIONS INTERFERE. ALIGN THE DELINEATORS WITH THE INSIDE EDGE OF THE OBSTRUCTION. CLEARANCE FOR DELINEATORS IS 1.8 m ON INTERSTATE HIGHWAYS, 0.6 m TO 1.8 m ON PRIMARY AND SECONDARY HIGHWAYS OR AS DETERMINED BY THE ENGINEER. THE STANDARD MOUNTING HEIGHT IS 1.2 m TO THE TOP OF THE POST. SUPPLY POST LENGTHS TO MAINTAIN THE PROPER MOUNTING HEIGHT AND A MINIMUM OF 0.45 m EMBEDMENT.

SPACE DELINEATORS ACCORDING TO THE DISTANCES FOUND IN THE TABLE ABOVE OR AS SPECIFIED IN THE PLANS. IN FIGURE A, IF "F" IS GREATER THAN 6 m ADD ONE REGULAR DELINEATOR IN AT "A" SPACING. UNDER NORMAL SPACING, SHOULD A DELINEATOR FALL WITHIN A CROSSROAD OR APPROACH, IT MAY BE MOVED IN EITHER DIRECTION A DISTANCE NOT TO EXCEED ONE QUARTER OF THE NORMAL SPACING. ELIMINATE DELINEATORS STILL FALLING IN SUCH AREAS.

ALL DELINEATOR REFLECTORS HAVE 18.75 mm CORNER RADII EXCEPT DESIGN "E".

MOUNT THE DELINEATOR REFLECTOR 25 mm BELOW THE TOP OF THE METAL U-POST.

WHEN THE ROADWAY ADT IS LESS THAN 900, DELINEATE ALL CURVES WITH 450 METER RADII OR LESS.

CONTINUOUSLY DELINEATE ROADWAYS WHEN THE ADT IS 900 AND GREATER, OR BY ENGINEERING JUDGEMENT.

ALL DIMENSIONS ARE MILLIMETERS (mm) UNLESS OTHERWISE NOTED.

DETAILED DRAWING

REFERENCE
STANDARD SPEC.
SECTION 619, 704

DWG. NO.
619-36

DELINEATOR PLACEMENT DETAILS

EFFECTIVE: FEBRUARY 2005

serving you with pride

MONTANA DEPARTMENT OF TRANSPORTATION

TYPE 1
X3-2

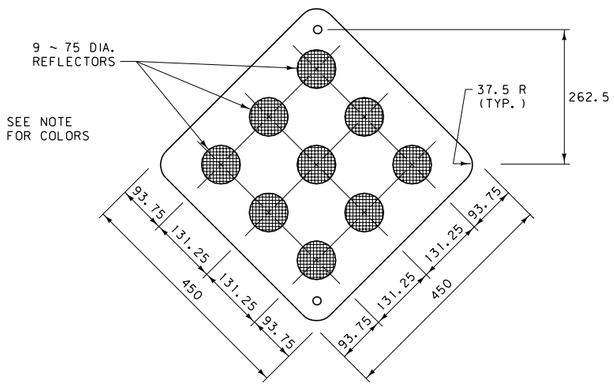

NOTE:
TYPE 1 OBJECT MARKERS HAVE YELLOW REFLECTORS ON A YELLOW OR BLACK BACKGROUND OR AN ALL YELLOW RETRO-REFLECTORIZED PANEL OF THE SAME SIZE. IF USED AS END OF ROAD MARKERS, TYPE 1 MARKERS ARE RETRO-REFLECTORIZED RED OR HAVE RED REFLECTORS ON A RED OR BLACK BACKGROUND.

TYPE 2
X3-3

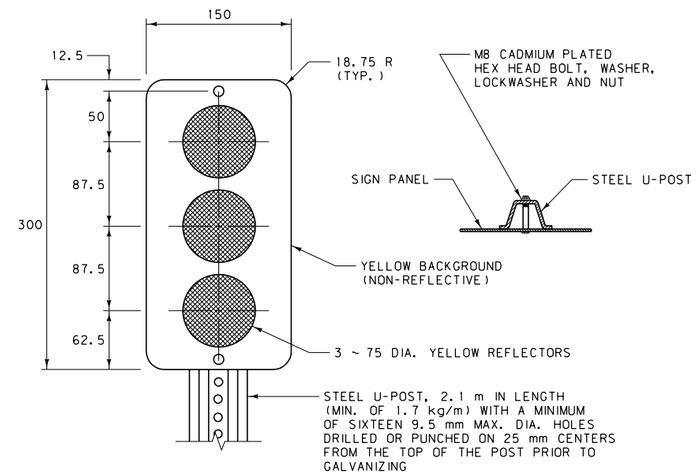

ALTERNATE DESIGN FOR TYPE 2 OBJECT MARKERS IS A YELLOW RETRO-REFLECTORIZED PANEL OF THE SAME SIZE.

TYPE 3
OM-3
(OM-3L SHOWN)

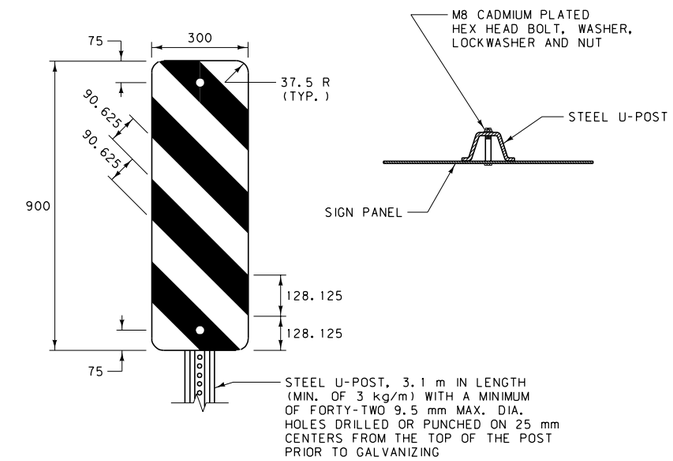

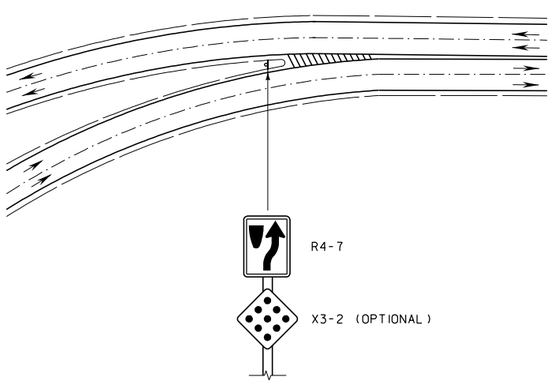

TYPICAL USE AND PLACEMENT

PLACEMENT OF X3-2 IS USED ONLY AS OPTIONAL TO ENHANCE TARGET VALUE WHEN NEEDED.

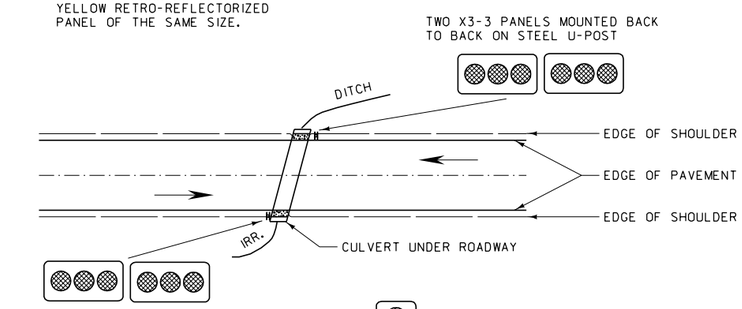

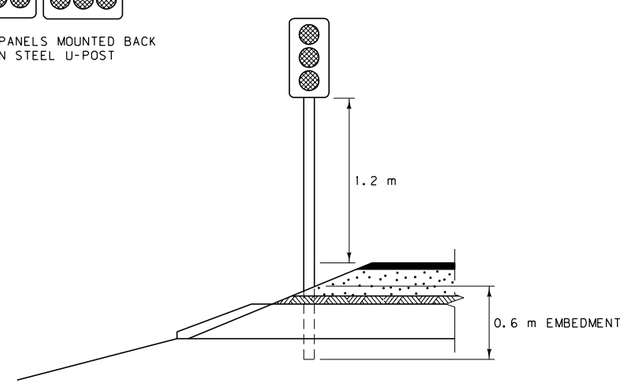

PLACE POST AND PANEL(S) SO THAT PANEL(S) ARE DIRECTLY ADJACENT TO INNER-MOST EDGE OF OBJECT NEAREST TRAVELED WAY.

TYPICAL USE AND PLACEMENT

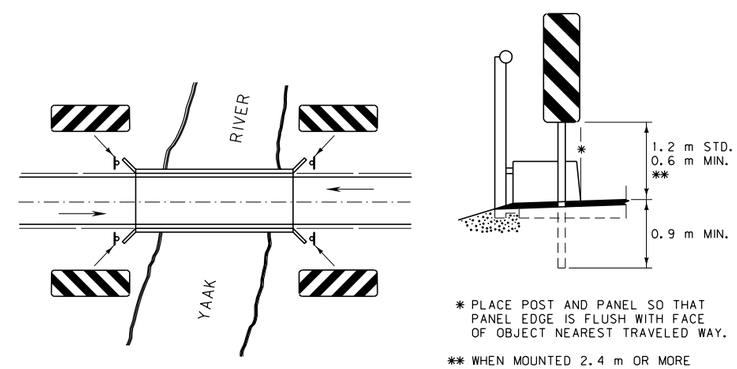

* PLACE POST AND PANEL SO THAT PANEL EDGE IS FLUSH WITH FACE OF OBJECT NEAREST TRAVELED WAY.

** WHEN MOUNTED 2.4 m OR MORE FROM CURB OR SHOULDER, THE MOUNTING HEIGHT IS MEASURED FROM THE GROUND LINE INSTEAD OF THE EDGE OF PAVEMENT.

TYPICAL USE AND PLACEMENT

ALL DIMENSIONS ARE MILLIMETERS (mm) UNLESS OTHERWISE NOTED.

DETAILED DRAWING	
REFERENCE STANDARD SPEC. SECTION 619	DWG. NO. 619-38
OBJECT MARKER DESIGN AND PLACEMENT DETAILS FOR OBSTRUCTIONS ADJACENT TO OR WITHIN HIGHWAYS	
EFFECTIVE: FEBRUARY 2005	
serving you with pride	*MONTANA DEPARTMENT OF TRANSPORTATION*

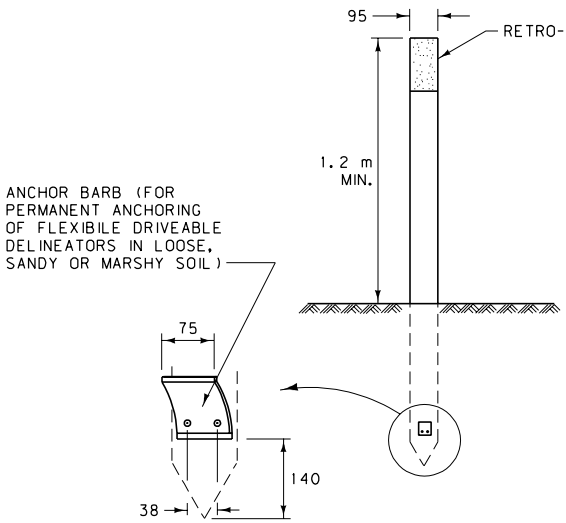

FLEXIBLE DRIVEABLE
DELINEATORS

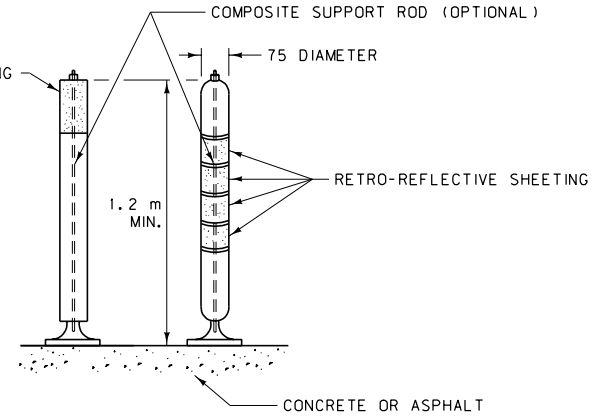

DETAILS ARE REPRESENTATIVE ONLY. ACTUAL DESIGN USED/SPECIFIED MAY VARY (SEE PLANS).

FLEXIBLE SURFACE-MOUNTED
DELINEATORS

NOTES:

USE FLEXIBLE DELINEATORS SIMILAR TO THE DESIGN AND SPECIFICATIONS SHOWN ON THIS SHEET OR IN THE SIGNING PLANS OF THE CONTRACT.

MOUNT OR EMBED FLEXIBLE DELINEATORS TO THE MANUFACTURER'S SPECIFICATIONS.

RETRO-REFLECTORIZE FLEXIBLE DELINEATORS, IF REQUIRED IN PLAN SPECIFICATIONS, BY THE ADDITION OF DELINEATOR CRYSTALS, EITHER 37.5 mm x 175 mm OR 75 mm DIAMETER, OR BY ADDING TWO 75 mm MINIMUM WIDTH BANDS OF RETRO-REFLECTIVE SHEETING TYPE HI, 360° AROUND THE TOP OF THE DELINEATOR. USE THE COLOR OF THE DELINEATOR CRYSTALS OR RETRO-REFLECTORIZED MATERIAL AS SHOWN IN THE SIGNING PLANS OF THE CONTRACT OR THE MUTCD.

THE EXACT LOCATION AND PLACEMENT OF THE FLEXIBLE DELINEATORS ARE SHOWN IN THE SIGNING PLANS.

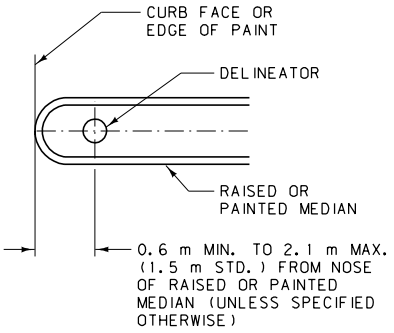

TYPICAL USE AND PLACEMENT

ALL DIMENSIONS ARE MILLIMETERS (mm) UNLESS OTHERWISE NOTED.

DETAILED DRAWING	
REFERENCE STANDARD SPEC. SECTION 619	DWG. NO. 619-40
FLEXIBLE DELINEATORS	
EFFECTIVE: FEBRUARY 2005	
serving you with pride	MONTANA DEPARTMENT OF TRANSPORTATION

BI BARRICADE

B(I)-L SHOWN

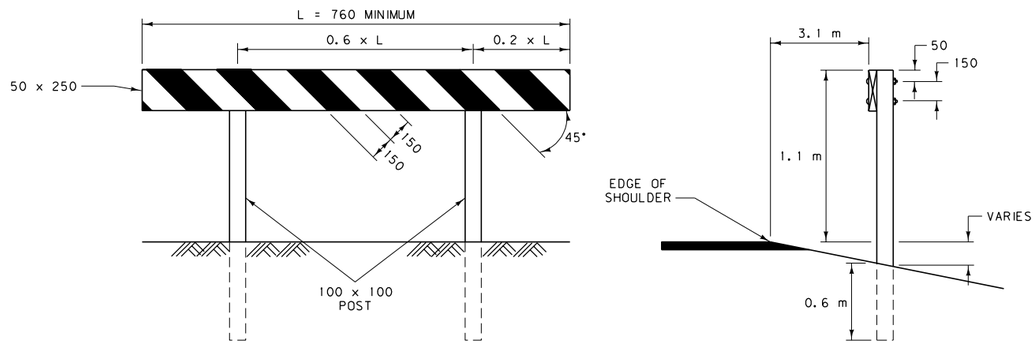

FRONT VIEW

RIGHT
SIDE VIEW

BARRICADE DETAILS

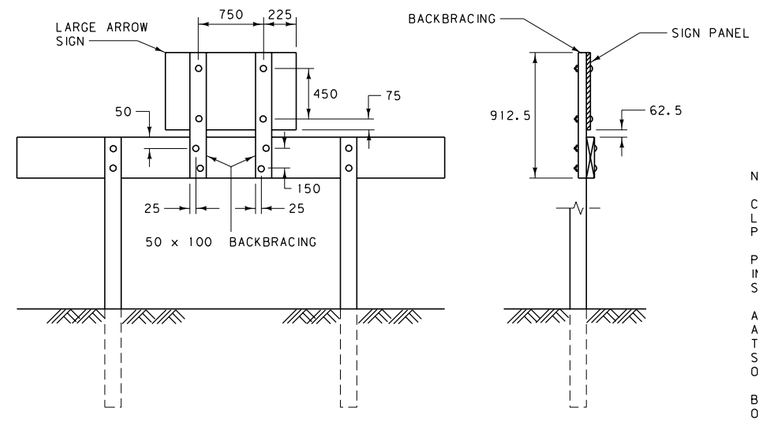

REAR VIEW

LEFT
SIDE VIEW

SIGN MOUNTING DETAILS

NOTES:

CONSTRUCT ALL BARRICADES OF COMMERCIAL GRADE S4S LUMBER. USE M10 GALVANIZED CARRIAGE OR CADMIUM PLATED BOLTS, WASHERS AND NUTS FOR ALL CONNECTIONS.

PAINT ALL BARRICADES WITH TWO COATS OF WHITE PAINT IN ACCORDANCE WITH SECTION 710 OF THE STANDARD SPECIFICATIONS.

ALL BARRICADES HAVE ALTERNATING RETRO-REFLECTIVE RED AND WHITE STRIPES, 150 mm IN WIDTH AT AN ANGLE OF 45° TO THE VERTICAL, SLANTING DOWNWARD TOWARD THE SIDE OR SIDES ON WHICH TRAFFIC IS TO FLOW. NOMINAL DIMENSIONS OF ROLL MATERIAL FOR STRIPES IS ACCEPTABLE.

BARRICADES DESIGNATED "L" ARE PLACED ON THE LEFT SIDE OF APPROACHING TRAFFIC. BARRICADES DESIGNATED "R" ARE PLACED ON THE RIGHT SIDE OF APPROACHING TRAFFIC.

RETRO-REFLECTORIZE ALL BARRICADES WITH THE SHEETING MOUNTED ON A SHEET ALUMINUM BACKING AT LEAST 0.5 mm THICK. USE ALUMINUM ALLOY 6061-T6 OR AA5052-H38 CONFORMING TO ASTM DESIGNATION B 209M. SECURE RETRO-REFLECTIVE ALUMINUM SHEETING WITH ALUMINUM NAILS.

DETERMINE THE POST LENGTHS IN THE FIELD, COMPLYING WITH THE MOUNTING HEIGHTS AND FOUNDATION DEPTHS LISTED ON THIS SHEET.

BIII BARRICADE

B(III)-L & R SHOWN

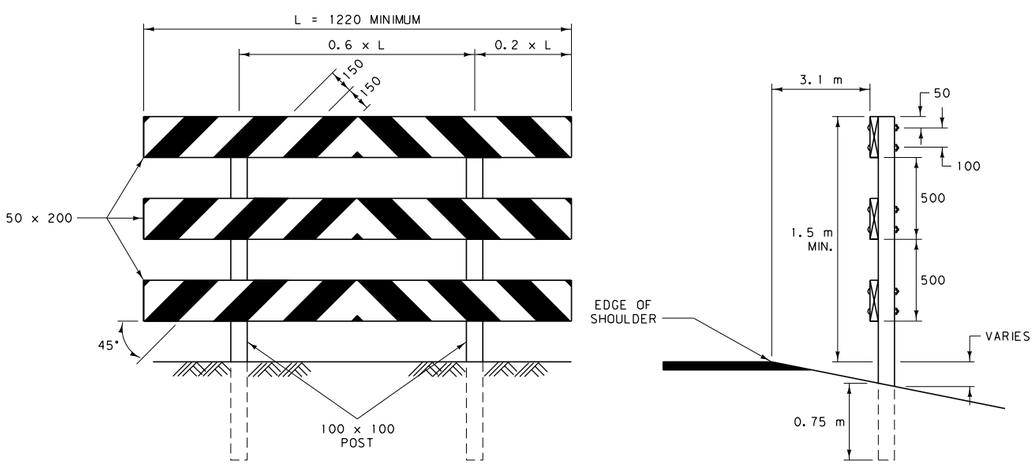

FRONT VIEW

RIGHT
SIDE VIEW

BARRICADE DETAILS

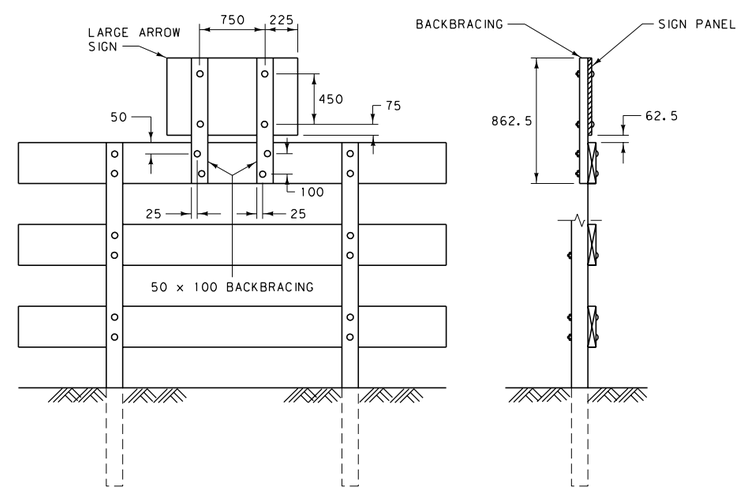

REAR VIEW

LEFT
SIDE VIEW

SIGN MOUNTING DETAILS

ALL DIMENSIONS ARE MILLIMETERS (mm) UNLESS OTHERWISE NOTED.

DETAILED DRAWING	
REFERENCE STANDARD SPEC. SECTION 619	DWG. NO. 619-42
PERMANENT BARRICADE DESIGN DETAILS	
EFFECTIVE: FEBRUARY 2005	
serving you with pride	MONTANA DEPARTMENT OF TRANSPORTATION

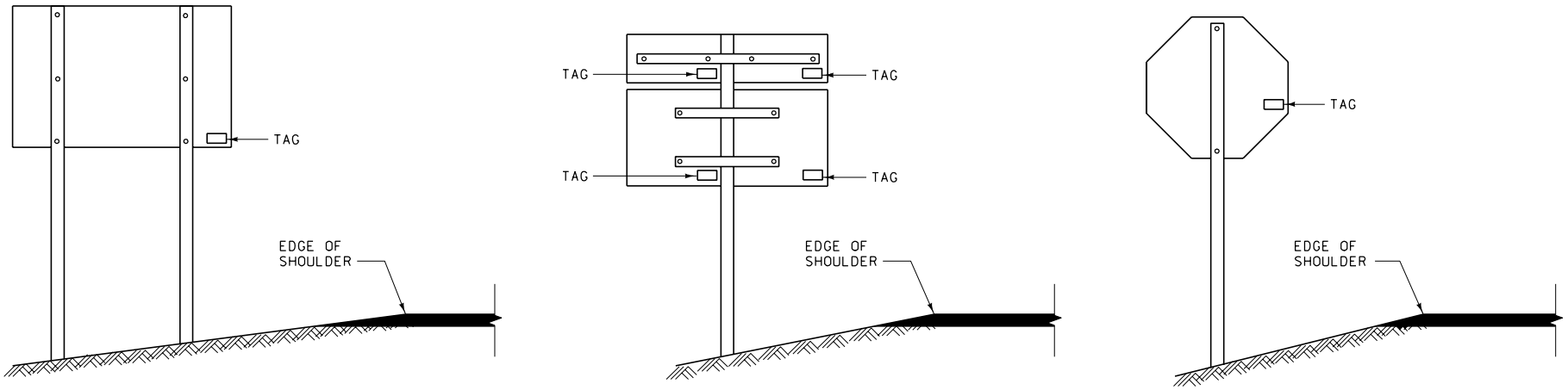

PLACEMENT DETAILS

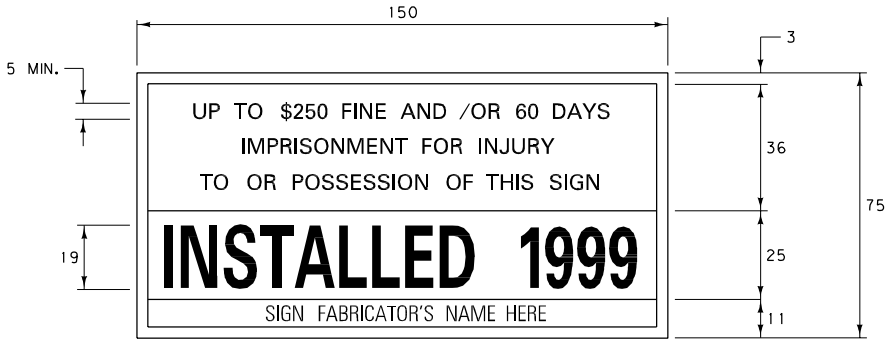

DATE TAG DETAIL

NOTES:

FURNISH AND PLACE INSTALLATION DATE TAGS ON ALL SIGNS PRIOR TO FINAL ACCEPTANCE OF THE PROJECT.

THE TAGS DISPLAY THE YEARS IN WHICH THE SIGNS WERE INSTALLED. SEE THE COLOR SEQUENCE TABLE SHOWN ON THIS DRAWING FOR THE APPROPRIATE COLORS. DATE TAGS ARE TO BE RETRO-REFLECTIVE.

PLACE A TAG ON THE BACK OF EACH SIGN, LOCATED NEAR THE LOWER CORNER OF THE SIGN NEAREST THE EDGE OF ROADWAY, TO BE VISIBLE FROM THE ROADWAY AS SHOWN IN THE EXAMPLES ABOVE.

PLACE TAGS ON ANY NEW SIGN INSTALLED IN THE FIELD AS ROUTINE MAINTENANCE BY MDT FORCES. MAINTENANCE DESIGN DATE TAGS CAN BE ORDERED FROM THE SIGN SHOP IN HELENA.

DATE TAG COLOR SEQUENCE

DATE TAG COLOR CORRESPONDS TO THE LAST DIGIT OF THE INSTALLATION YEAR AS FOLLOWS:

0 - YELLOW	5 - RED
1 - WHITE	6 - PURPLE
2 - LIGHT BLUE	7 - ORANGE
3 - GOLD	8 - BLUE
4 - LIGHT GREEN	9 - GREEN

ALL DIMENSIONS ARE MILLIMETERS (mm) UNLESS OTHERWISE NOTED.

DETAILED DRAWING

REFERENCE
STANDARD SPEC.
SECTION 619

DWG. NO.
619-44

INSTALLATION
DATE TAGS

EFFECTIVE: FEBRUARY 2005

MDT serving you with pride

MONTANA DEPARTMENT OF TRANSPORTATION