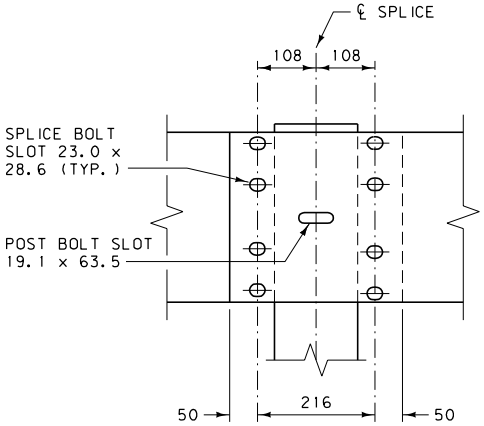

BEAM SPLICE

(LAP IN DIRECTION OF ADJACENT TRAFFIC)

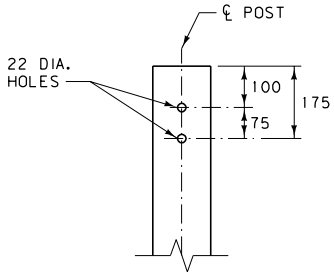

POST HOLE DETAIL

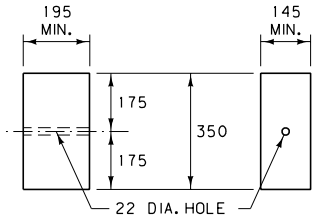

WOOD BLOCK

PDB01✱

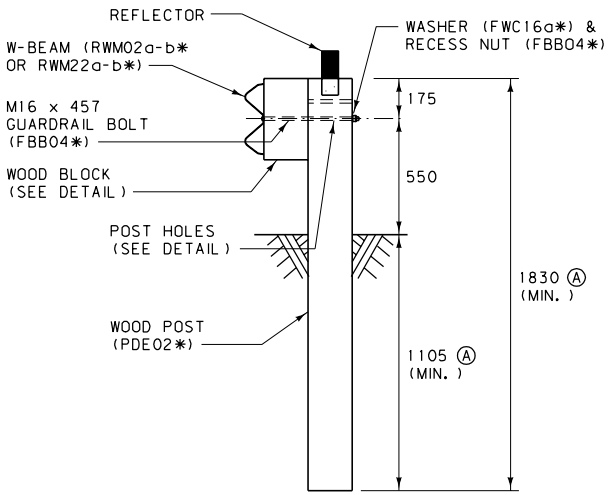

WOOD POST AND MOUNTING DETAIL

Ⓐ STANDARD UNLESS SPECIFIED OTHERWISE IN PLANS.

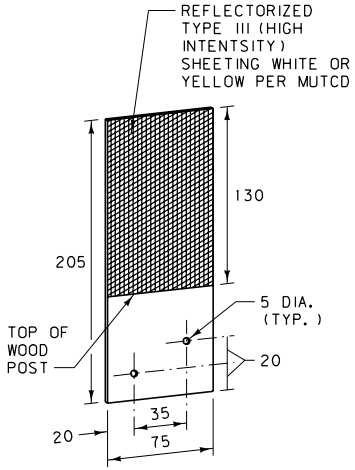

REFLECTOR

(SEE NOTES)

NOTES:

① INSTALL ALL BOLTS WITH HEADS ON TRAFFIC SIDE OF INSTALLATION.

② USE WOOD BLOCKS OR OTHER NCHRP 350 APPROVED BLOCKS. AFFIX WOOD BLOCKS TO POSTS WITH TWO 16 PENNY GALV. NAILS OR 14 GAGE WIRE WRAP.

③ ATTACH REFLECTORS TO POSTS EVERY 7.62 m, INCLUDING TERMINAL SECTIONS, WITH THE REFLECTORIZED SURFACE FACING ADJACENT TRAFFIC. FABRICATE REFLECTORS FROM 1.6 mm THICK ALUMINUM ALLOY MEETING THE REQUIREMENTS OF STD. SPEC. 704. FASTEN REFLECTOR TO WOOD POST USING TWO 16 PENNY RING-SHANKED GALVANIZED NAILS AND TWO 4.8 mm DIA. WASHERS IN PRE-DRILLED HOLES.

④ ON EXISTING GUARDRAIL INSTALLATIONS, THE MINIMUM RAIL HEIGHT IS 460 mm.

⑤ WIDENING IS REQUIRED IF FINISHED SHOULDER IS LESS THAN 0.6 m FROM TRAFFIC LANE.

✱ SEE DTL. DWG. NO. 606-80 FOR SCHEDULE OF GUARDRAIL HARDWARE.

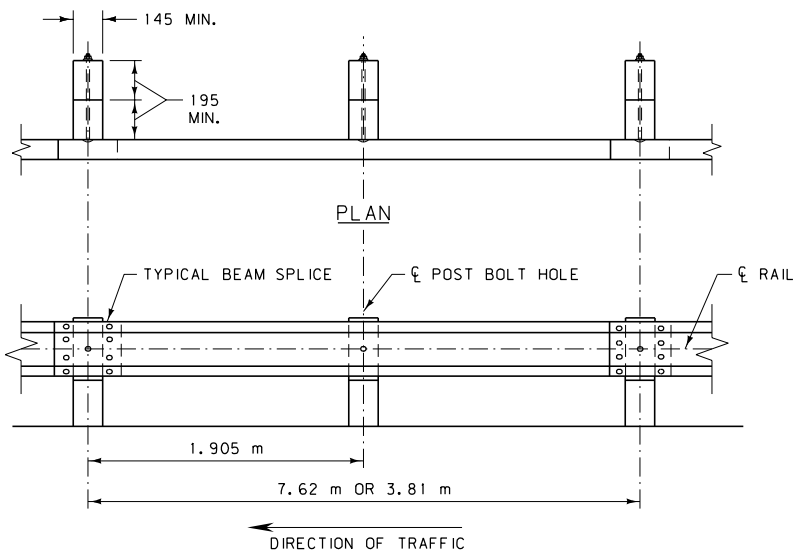

TYPICAL INSTALLATION

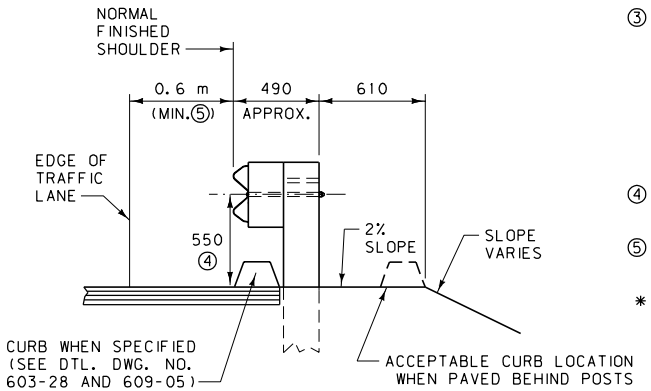

ALL DIMENSIONS ARE MILLIMETERS (mm) UNLESS OTHERWISE NOTED.

DETAILED DRAWING	
REFERENCE STANDARD SPEC. SECTION 606	DWG. NO. 606-05A
METAL GUARDRAIL - WOOD POSTS	
EFFECTIVE: FEBRUARY 2005	

MDT serving you with pride — MONTANA DEPARTMENT OF TRANSPORTATION

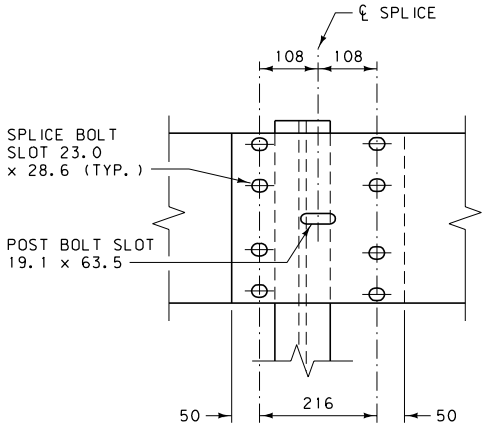

BEAM SPLICE

(LAP IN DIRECTION OF ADJACENT TRAFFIC)

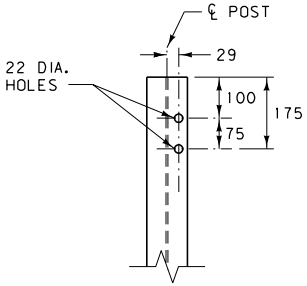

POST HOLE DETAIL

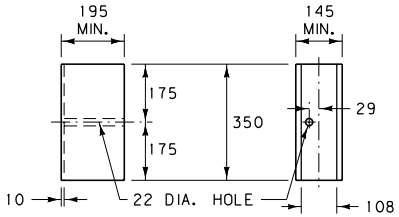

ROUTED WOOD BLOCK

PDB01*

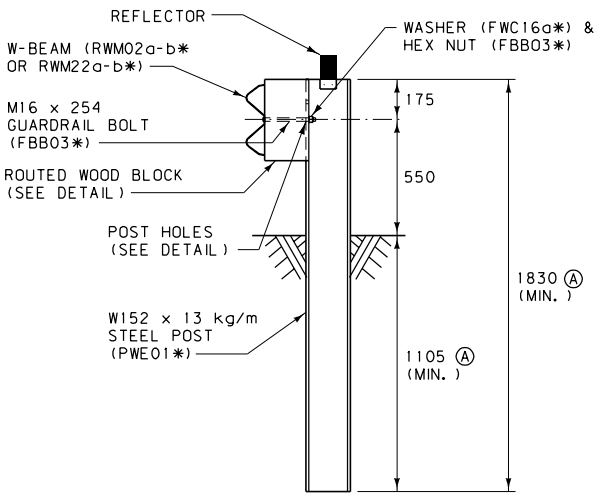

STEEL POST AND MOUNTING DETAIL

Ⓐ STANDARD UNLESS SPECIFIED OTHERWISE IN PLANS.

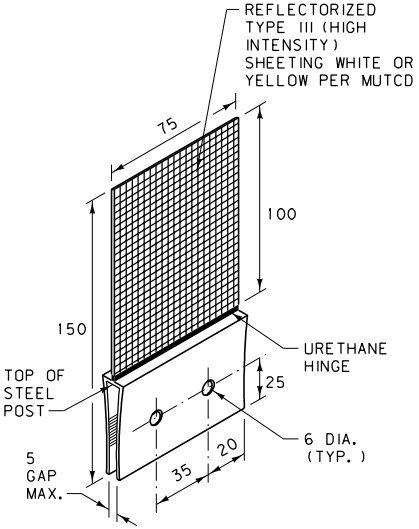

REFLECTOR

(SEE NOTES)

NOTES:

1. INSTALL ALL BOLTS WITH HEADS ON TRAFFIC SIDE OF INSTALLATION.
2. USE ROUTED WOOD BLOCKS OR OTHER NCHRP 350 APPROVED BLOCKS.
3. ATTACH REFLECTORS TO POSTS EVERY 7.62 m, INCLUDING TERMINAL SECTIONS, WITH THE REFLECTORIZED SURFACE FACING ADJACENT TRAFFIC. FASTEN REFLECTOR TO STEEL POST USING AN APPROVED ADHESIVE. REFLECTORS MAY BE BOLTED TO POSTS PROVIDED HOLES IN POST ARE DRILLED BEFORE BEING GALVANIZED.
4. ON EXISTING GUARDRAIL INSTALLATIONS, THE MINIMUM RAIL HEIGHT IS 460 mm.
5. WIDENING IS REQUIRED IF FINISHED SHOULDER IS LESS THAN 0.6 m FROM THE THE TRAFFIC LANE.
6. STEEL POSTS WITH OTHER HOLE CONFIGURATIONS MAY BE ACCEPTED, PROVIDED THEY HAVE AT LEAST THE HOLES DETAILED ON THIS DRAWING AND THEY MEET AASHTO'S PUBLICATION, "A GUIDE TO STANDARDIZED HIGHWAY BARRIER HARDWARE" AND NCHRP 350 REQUIREMENTS.

* SEE DTL. DWG. NO. 606-80 FOR SCHEDULE OF GUARDRAIL HARDWARE.

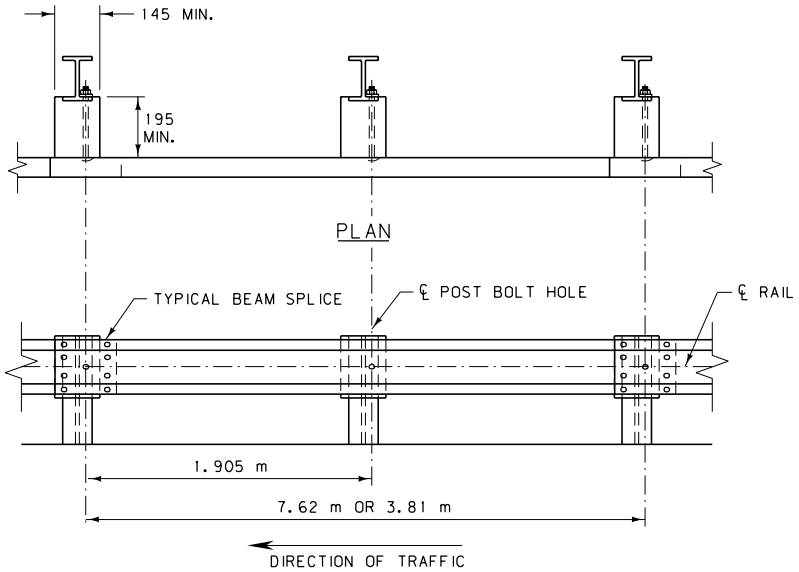

ELEVATION

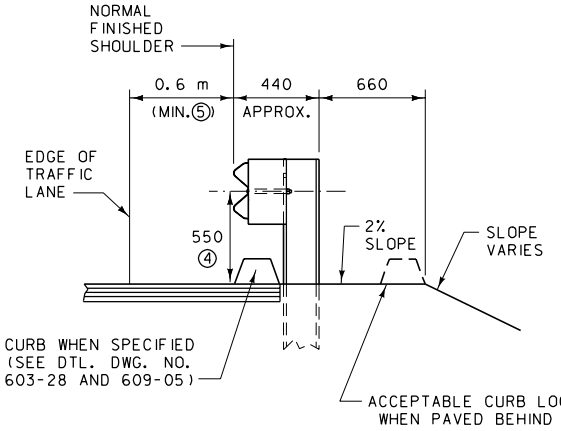

TYPICAL INSTALLATION

ALL DIMENSIONS ARE MILLIMETERS (mm) UNLESS OTHERWISE NOTED.

DETAILED DRAWING	
REFERENCE STANDARD SPEC. SECTION 606	DWG. NO. 606-05B
METAL GUARDRAIL - STEEL POSTS	
EFFECTIVE: FEBRUARY 2005	
serving you with pride	MONTANA DEPARTMENT OF TRANSPORTATION

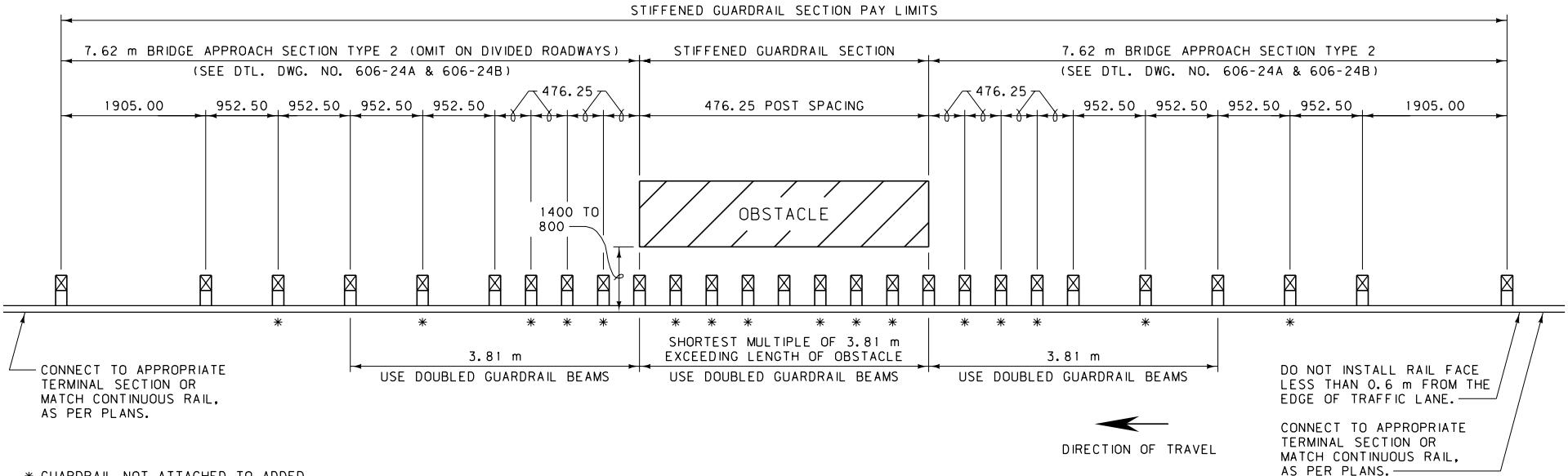

LINE OBSTACLE APPLICATION

* GUARDRAIL NOT ATTACHED TO ADDED POSTS. BLOCK-OUT FASTENED TO POST WITH STANDARD POST BOLT.

GUARDRAIL ATTACHED TO POSTS ONLY AT STANDARD MULTIPLES OF 1.905 m THROUGH OBSTACLE SECTION.

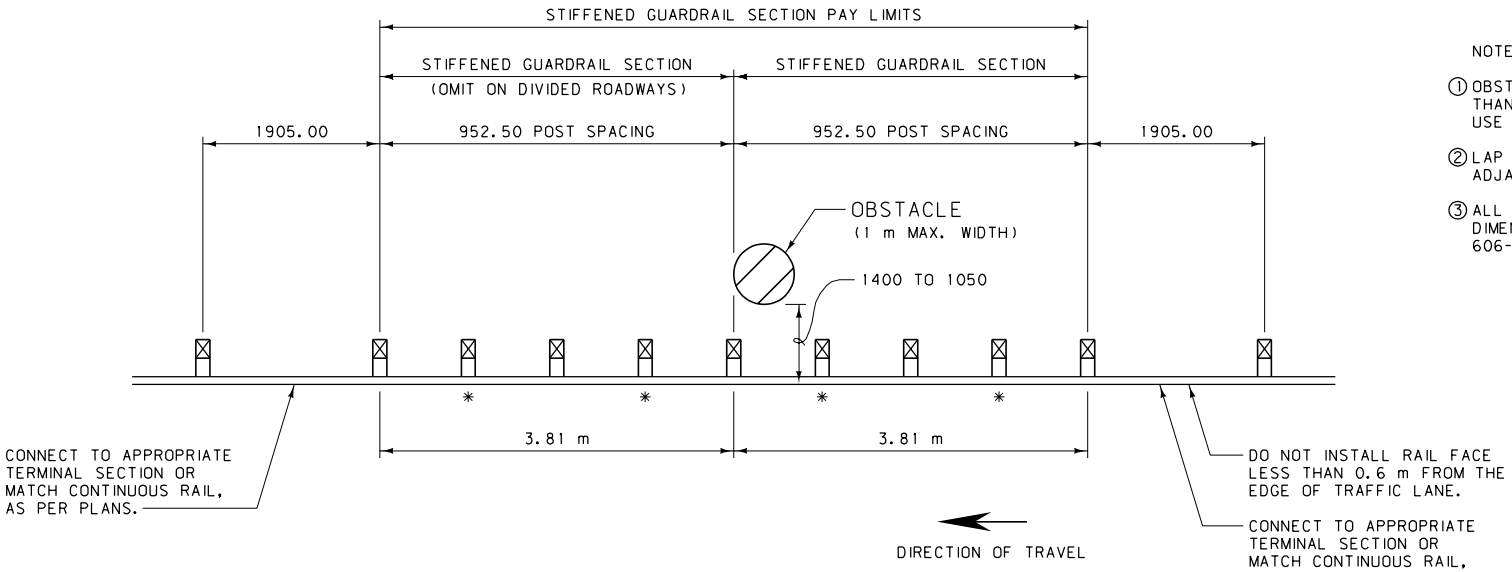

POINT OBSTACLE APPLICATION

NOTES:

1. OBSTACLES CLOSER TO THE FACE OF RAIL THAN THE INDICATED LIMITS REQUIRE THE USE OF CONCRETE BARRIER RAIL.
2. LAP ALL DOUBLED RAIL IN THE DIRECTION OF ADJACENT TRAFFIC.
3. ALL POSTS AND BLOCKS ARE STANDARD DIMENSIONS AS PER DETAILED DRAWING NO. 606-05A AND 606-05B.

ALL DIMENSIONS ARE MILLIMETERS (mm) UNLESS OTHERWISE NOTED.

DETAILED DRAWING	
REFERENCE STANDARD SPEC. SECTION 606	DWG. NO. 606-07
STIFFENED GUARDRAIL SECTIONS	
EFFECTIVE: FEBRUARY 2005	

MDT serving you with pride — MONTANA DEPARTMENT OF TRANSPORTATION

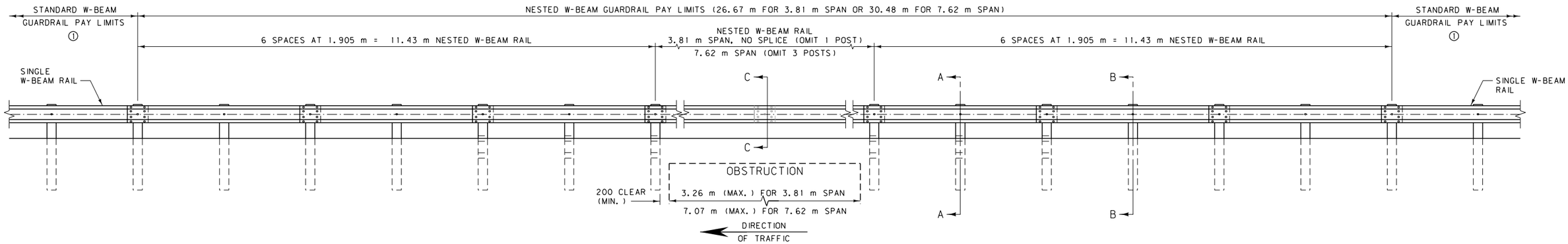

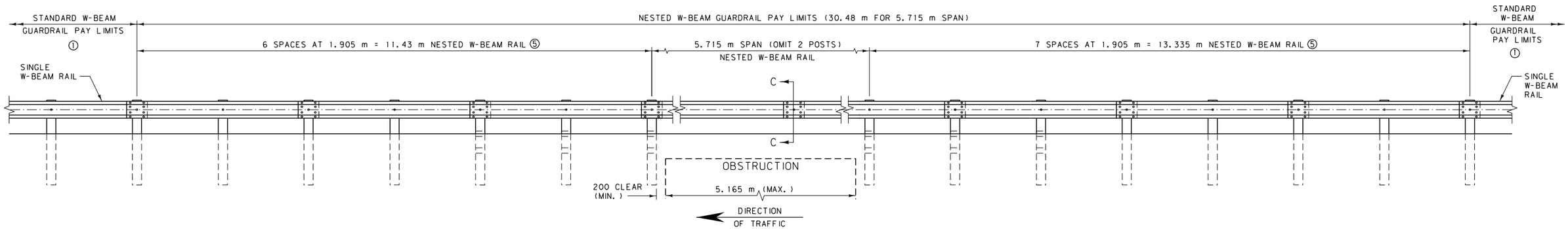

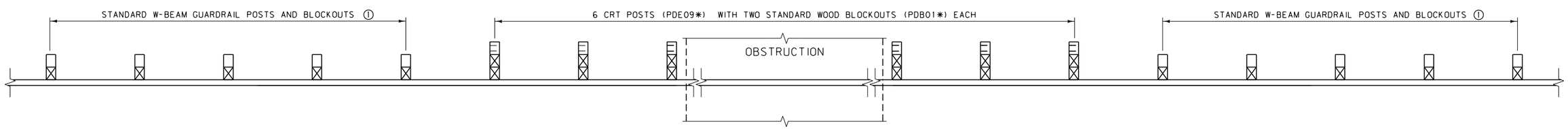

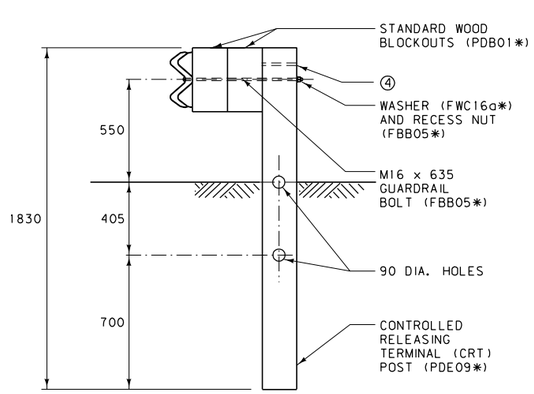

SECTION A-A

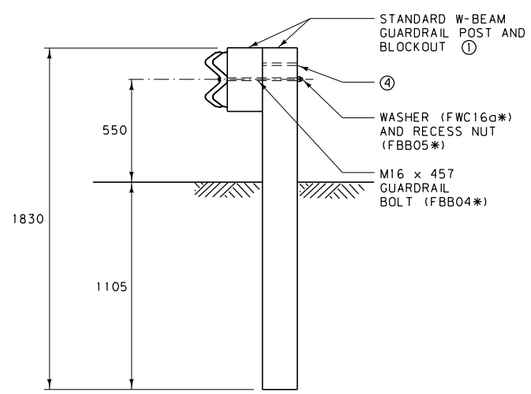

SECTION B-B

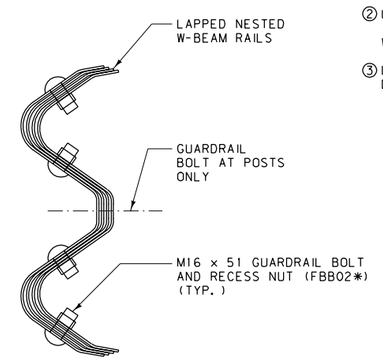

SECTION C-C

NOTES:

① SEE DTL. DWG. NO. 606-05A AND 606-05B FOR STANDARD W-BEAM GUARDRAIL AND ASSOCIATED HARDWARE.

② USE TWO STANDARD W-BEAM RAILS (RWM02a-b* OR RWM22a-b*) FOR NESTED W-BEAM.

③ LAP ALL NESTED W-BEAM RAIL IN THE DIRECTION OF ADJACENT TRAFFIC.

④ ALL POSTS ARE TO HAVE A SECOND BOLT HOLE AT 75 ABOVE THE FIRST.

⑤ THE SPLICE LOCATIONS ON THE 5.175 m SPAN MAY BE SHIFTED DOWNSTREAM BY 1.905 m.

⑥ KEEP THE AREA WITHIN 1.5 m FROM THE BACK OF THE RAIL CLEAR OF ANY FIXED-OBJECT HAZARDS.

* SEE DTL. DWG. NO. 606-80 FOR SCHEDULE OF GUARDRAIL HARDWARE.

ALL DIMENSIONS ARE MILLIMETERS (mm) UNLESS OTHERWISE NOTED.

DETAILED DRAWING	
REFERENCE STANDARD SPEC. SECTION 606	DWG. NO. 606-09
NESTED W-BEAM GUARDRAIL	
EFFECTIVE: FEBRUARY 2005	
serving you with pride	MONTANA DEPARTMENT OF TRANSPORTATION

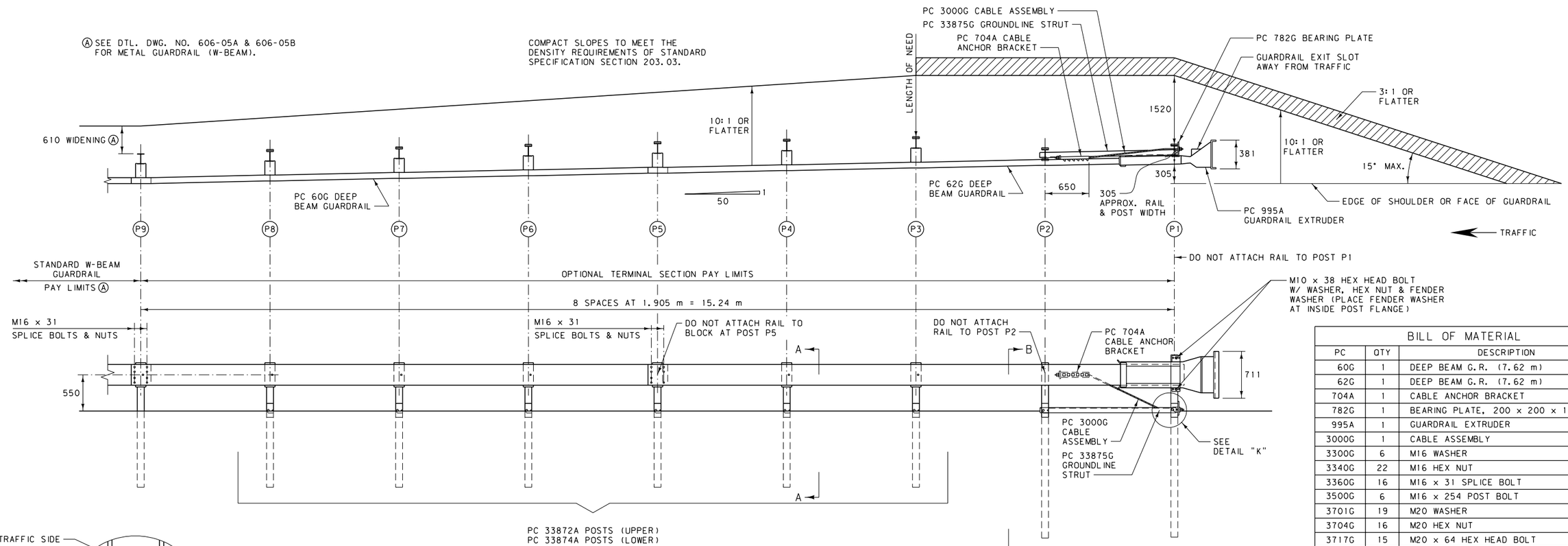

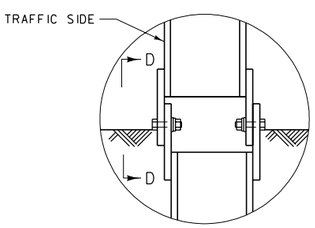

DETAIL D

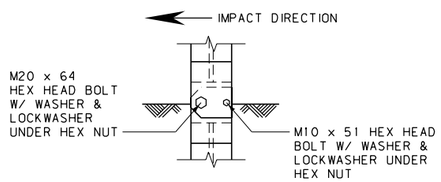

VIEW D-D

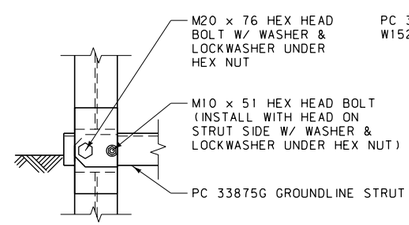

VIEW H-H

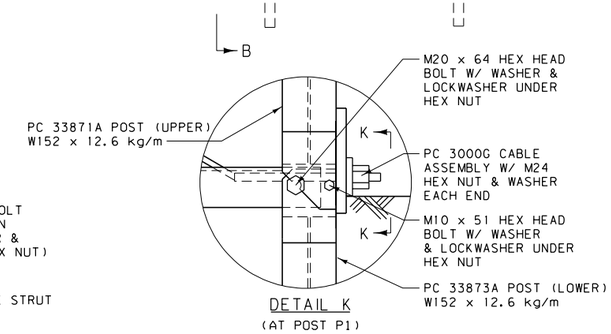

DETAIL K
(AT POST P1)

BILL OF MATERIAL		
PC	QTY	DESCRIPTION
60G	1	DEEP BEAM G.R. (7.62 m)
62G	1	DEEP BEAM G.R. (7.62 m)
704A	1	CABLE ANCHOR BRACKET
782G	1	BEARING PLATE, 200 x 200 x 16
995A	1	GUARDRAIL EXTRUDER
3000G	1	CABLE ASSEMBLY
3300G	6	M16 WASHER
3340G	22	M16 HEX NUT
3360G	16	M16 x 31 SPLICE BOLT
3500G	6	M16 x 254 POST BOLT
3701G	19	M20 WASHER
3704G	16	M20 HEX NUT
3717G	15	M20 x 64 HEX HEAD BOLT
3718G	1	M20 x 76 HEX HEAD BOLT
3900G	2	M24 WASHER
3910G	2	M24 HEX NUT
4076B	6	WOOD BLOCK, 150 x 200 x 350
4254G	18	M10 WASHER
4255G	2	M10 FENDER WASHER (38 O.D.)
4258G	16	M10 LOCKWASHER
4261G	2	M10 x 38 HEX HEAD BOLT
4699G	16	M20 LOCKWASHER
6321G	16	M10 x 51 HEX HEAD BOLT
6405G	18	M10 HEX NUT
33871A	1	ETPLUS HBA POST P1 (UPPER)
33872A	7	ETPLUS HBA POST P2 TO P8 (UPPER)
33873A	2	ETPLUS HBA POST P1 & P2 (LOWER)
33874A	6	ETPLUS HBA POST P3 TO P8 (LOWER)
33875G	1	1981 ANGLE STRUT ET HBA

NOTE:

SECTION "A-A" IS SIMILAR AT POST P5 EXCEPT RAIL IS NOT ATTACHED.

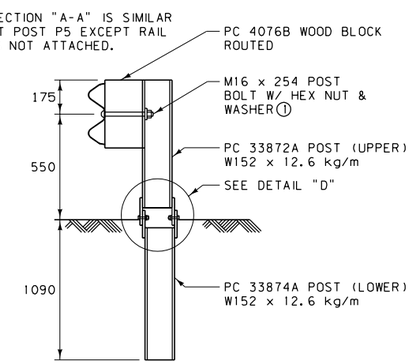

SECTION A-A
(TYP AT POSTS P3, P4, P6, P7 & P8)

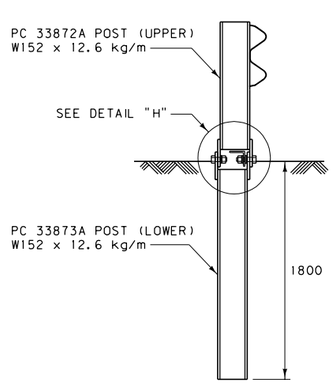

SECTION B-B
(AT POST P2)

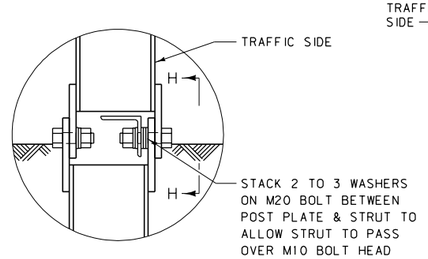

DETAIL H
(AT POST P2)

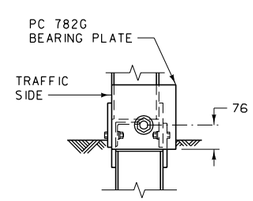

VIEW K-K

NOTES:

① THE M16 FLAT WASHER IS USED UNDER THE NUT, BEHIND THE POST ONLY. NO WASHER IS USED AT THE RAIL.

② USE THE ET-PLUS TERMINAL SECTION ON DIVIDED ROADWAYS IF THE WIDTH IS 7.5 m OR GREATER BETWEEN FINISHED SURFACES. CONSIDER OTHER TERMINAL SECTIONS IF THE WIDTH IS LESS THAN 7.5 m BETWEEN FINISHED SURFACES.

③ FLARE THE END SECTION AWAY FROM TRAFFIC AT A RATE OF 50:1 FOR 15.24 m (ILLUSTRATED). FLARES OF 50:1 FOR 30.48 m MAY ALSO BE USED. THE FLARE MAY BE OMITTED ON ROADS WITH SHOULDERS GREATER THAN 0.6 m IN WIDTH.

④ PLACE A SELF-ADHESIVE OBJECT MARKER ON THE GUARDRAIL EXTRUDER FACE, HAVING ALTERNATING RETRO-REFLECTIVE BLACK AND YELLOW STRIPES SLOPED DOWNWARD AT AN ANGLE OF 45° TOWARDS THE SIDE ON WHICH TRAFFIC IS TO PASS.

⑤ ATTACH REFLECTORS TO TERMINAL SECTION POSTS, PER DTL. DWG. NO. 606-05A & 606-05B.

⑥ AFTER FINAL ASSEMBLY, RECHECK CABLE TO MAKE SURE IT IS TAUT AND HAS NOT RELAXED.

⑦ OBTAIN ENGINEER'S APROVAL OF MANUFACTURER INSTALLATION OPTIONS WHEN SITE CONDITIONS PREVENT THE USE OF THE OPTION SHOWN ON THIS DETAIL.

⑧ LAP ALL W-BEAM SPLICES IN THE DIRECTION OF ADJACENT TRAFFIC.

ALL DIMENSIONS ARE MILLIMETERS (mm) UNLESS OTHERWISE NOTED.

DETAILED DRAWING

REFERENCE STANDARD SPEC. SECTION 606

DWG. NO. 606-13A

OPTIONAL TERMINAL SECTION - ET-PLUS

EFFECTIVE: FEBRUARY 2005

MDT serving you with pride — MONTANA DEPARTMENT OF TRANSPORTATION

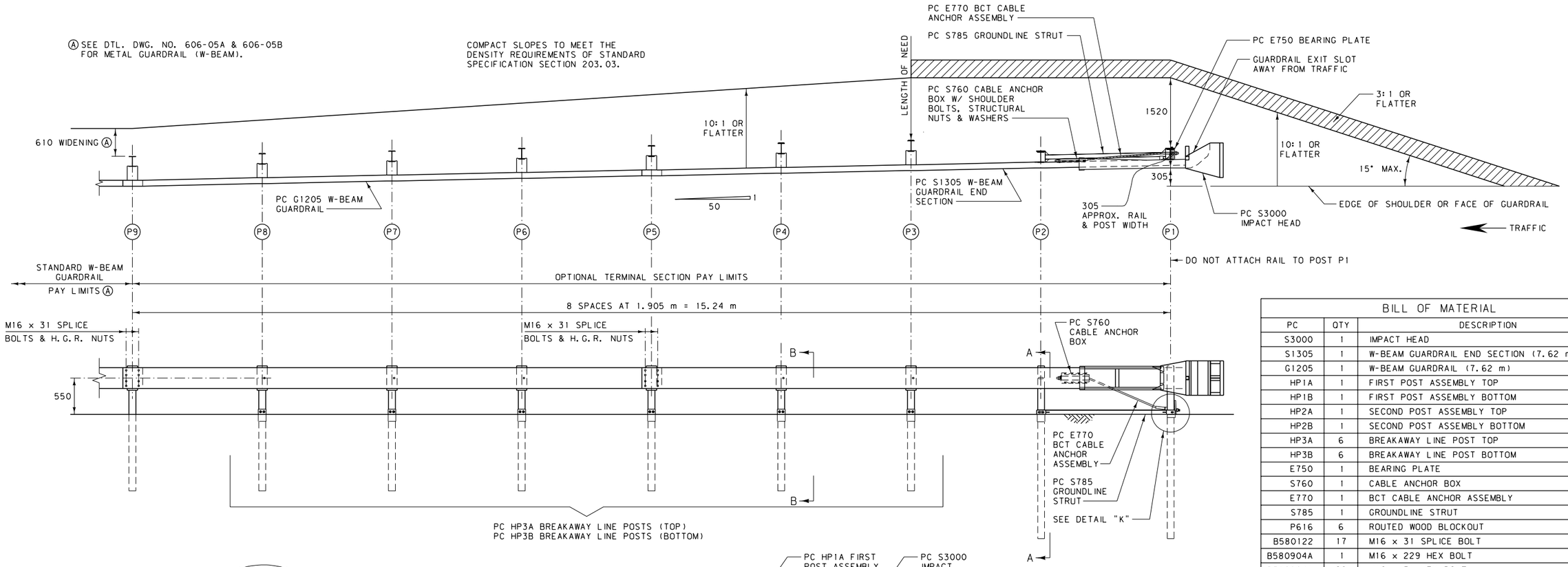

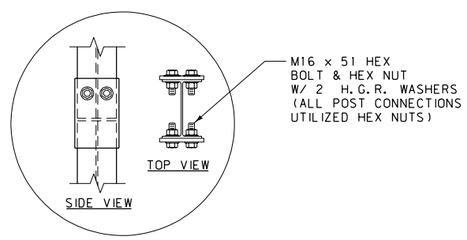

DETAIL D

(TYP. AT POSTS P2 THRU P8)

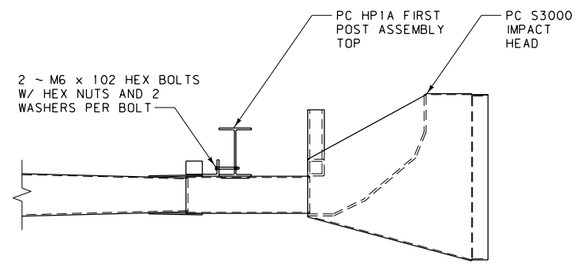

IMPACT HEAD CONNECTION DETAIL

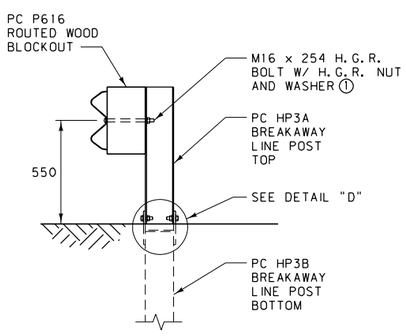

SECTION B-B

(TYP. AT POSTS P3 THRU P8)

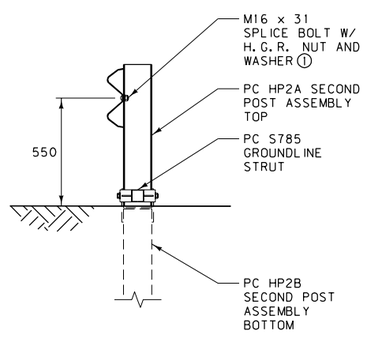

SECTION A-A

(AT POST P2)

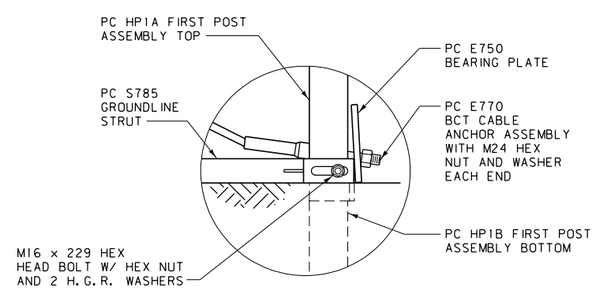

DETAIL K

(AT POST P1)

BILL OF MATERIAL

PC	QTY	DESCRIPTION
S3000	1	IMPACT HEAD
S1305	1	W-BEAM GUARDRAIL END SECTION (7.62 m)
G1205	1	W-BEAM GUARDRAIL (7.62 m)
HP1A	1	FIRST POST ASSEMBLY TOP
HP1B	1	FIRST POST ASSEMBLY BOTTOM
HP2A	1	SECOND POST ASSEMBLY TOP
HP2B	1	SECOND POST ASSEMBLY BOTTOM
HP3A	6	BREAKAWAY LINE POST TOP
HP3B	6	BREAKAWAY LINE POST BOTTOM
E750	1	BEARING PLATE
S760	1	CABLE ANCHOR BOX
E770	1	BCT CABLE ANCHOR ASSEMBLY
S785	1	GROUNDLINE STRUT
P616	6	ROUTED WOOD BLOCKOUT
B580122	17	M16 x 31 SPLICE BOLT
B580904A	1	M16 x 229 HEX BOLT
B580204A	28	M16 x 51 HEX BOLT
B581002	6	M16 x 254 H.G.R. BOLT
N055	29	M16 HEX NUT
N050	23	M16 H.G.R. NUT
W050	65	M16 H.G.R. WASHER
N100	2	M24 ANCHOR CABLE HEX NUT
W100	2	M24 ANCHOR CABLE WASHER
B140304	2	M6 x 102 HEX BOLT
N014	2	M6 HEX NUT
W014	4	M6 WASHER
SB58A	8	CABLE ANCHOR BOX SHOULDER BOLT
N055A	8	M12 A325 STRUCTURAL NUT
W050A	16	M14 (27 O.D.) A325 STRUCTURAL WASHER

NOTES:

① THE M16 H.G.R. WASHER IS USED UNDER THE NUT, BEHIND THE POST ONLY. NO WASHER IS USED AT THE RAIL.

② USE THE SKT 350 TERMINAL SECTION ON DIVIDED ROADWAYS IF THE WIDTH IS 7.5 m OR GREATER BETWEEN FINISHED SURFACES. CONSIDER OTHER TERMINAL SECTIONS IF THE WIDTH IS LESS THAN 7.5 m BETWEEN FINISHED SURFACES.

③ FLARE THE END SECTION AWAY FROM TRAFFIC AT A RATE OF 50:1 FOR 15.24 m (ILLUSTRATED). FLARES OF 50:1 FOR 30.48 m MAY ALSO BE USED. THE FLARE MAY BE OMITTED ON ROADS WITH SHOULDERS GREATER THAN 0.6 m IN WIDTH.

④ PLACE A SELF-ADHESIVE OBJECT MARKER ON THE GUARDRAIL IMPACT HEAD FACE, HAVING ALTERNATING RETRO-REFLECTIVE BLACK AND YELLOW STRIPES SLOPED DOWNWARD AT AN ANGLE OF 45° TOWARDS THE SIDE ON WHICH TRAFFIC IS TO PASS.

⑤ ATTACH REFLECTORS TO TERMINAL SECTION POSTS, PER DTL. DWG. NO. 606-05A & 606-05B.

⑥ AFTER FINAL ASSEMBLY, RECHECK CABLE TO MAKE SURE IT IS TAUT AND HAS NOT RELAXED.

⑦ OBTAIN ENGINEER'S APPROVAL OF MANUFACTURER INSTALLATION OPTIONS WHEN SITE CONDITIONS PREVENT THE USE OF THE OPTION SHOWN ON THIS DETAIL.

⑧ LAP ALL W-BEAM SPLICES IN THE DIRECTION OF ADJACENT TRAFFIC.

ALL DIMENSIONS ARE MILLIMETERS (mm) UNLESS OTHERWISE NOTED.

DETAILED DRAWING

REFERENCE STANDARD SPEC. SECTION 606

DWG. NO. 606-13B

OPTIONAL TERMINAL SECTION - SKT 350

EFFECTIVE: FEBRUARY 2005

MDT serving you with pride

MONTANA DEPARTMENT OF TRANSPORTATION

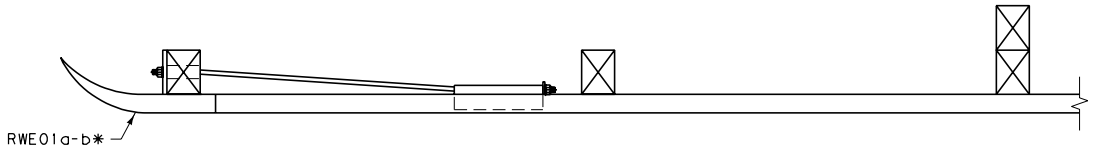

PLAN

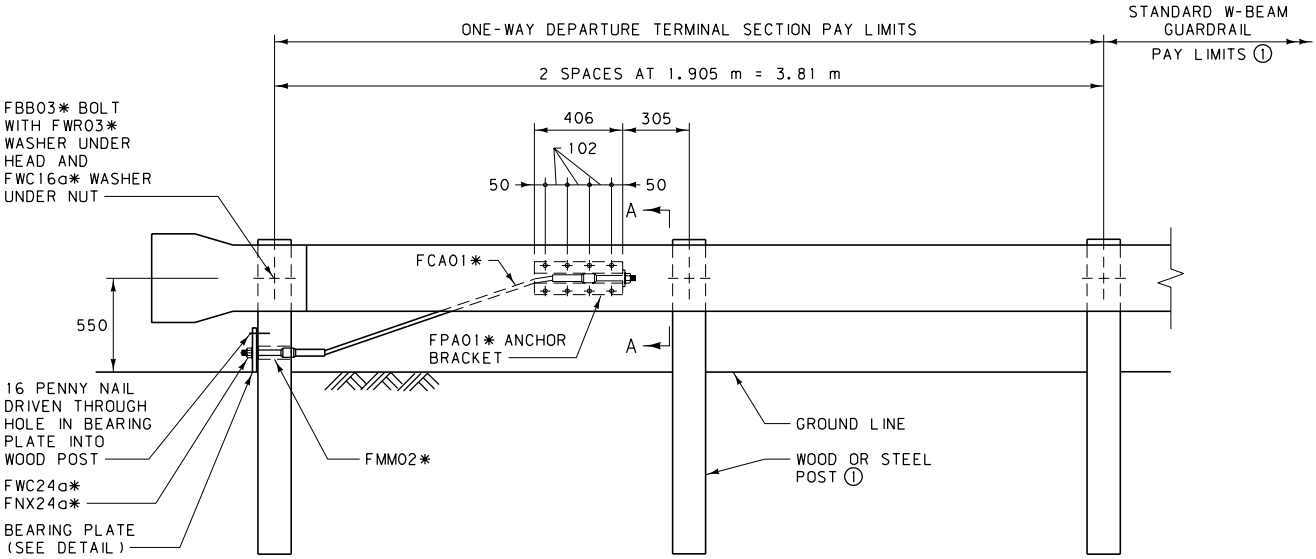

ELEVATION

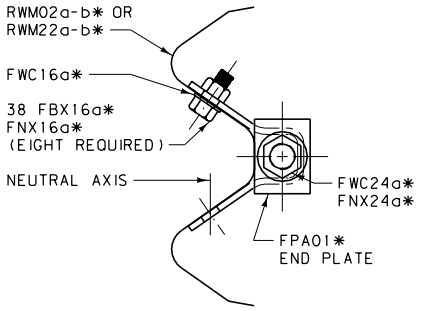

SECTION A-A

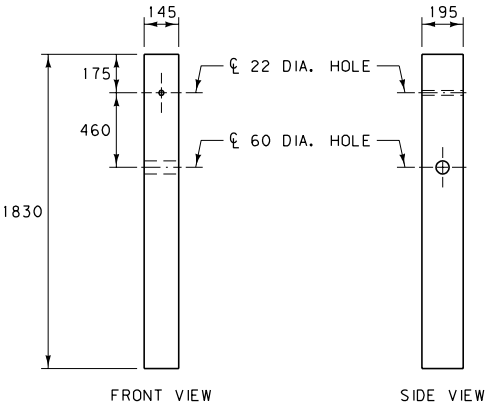

END POST DETAILS

PDF03*

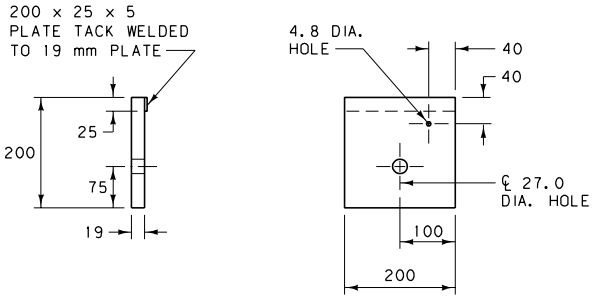

BEARING PLATE DETAIL

FPB01*

ALL DIMENSIONS ARE MILLIMETERS (mm) UNLESS OTHERWISE NOTED.

NOTES:

① SEE DTL. DWG. NO. 606-05A AND 606-05B FOR METAL GUARDRAIL (W-BEAM).

* SEE DTL. DWG. NO. 606-80 FOR SCHEDULE OF GUARDRAIL HARDWARE.

DETAILED DRAWING	
REFERENCE STANDARD SPEC. SECTION 606	DWG. NO. 606-18
ONE-WAY DEPARTURE TERMINAL SECTION	
EFFECTIVE: FEBRUARY 2005	
serving you with pride	MONTANA DEPARTMENT OF TRANSPORTATION

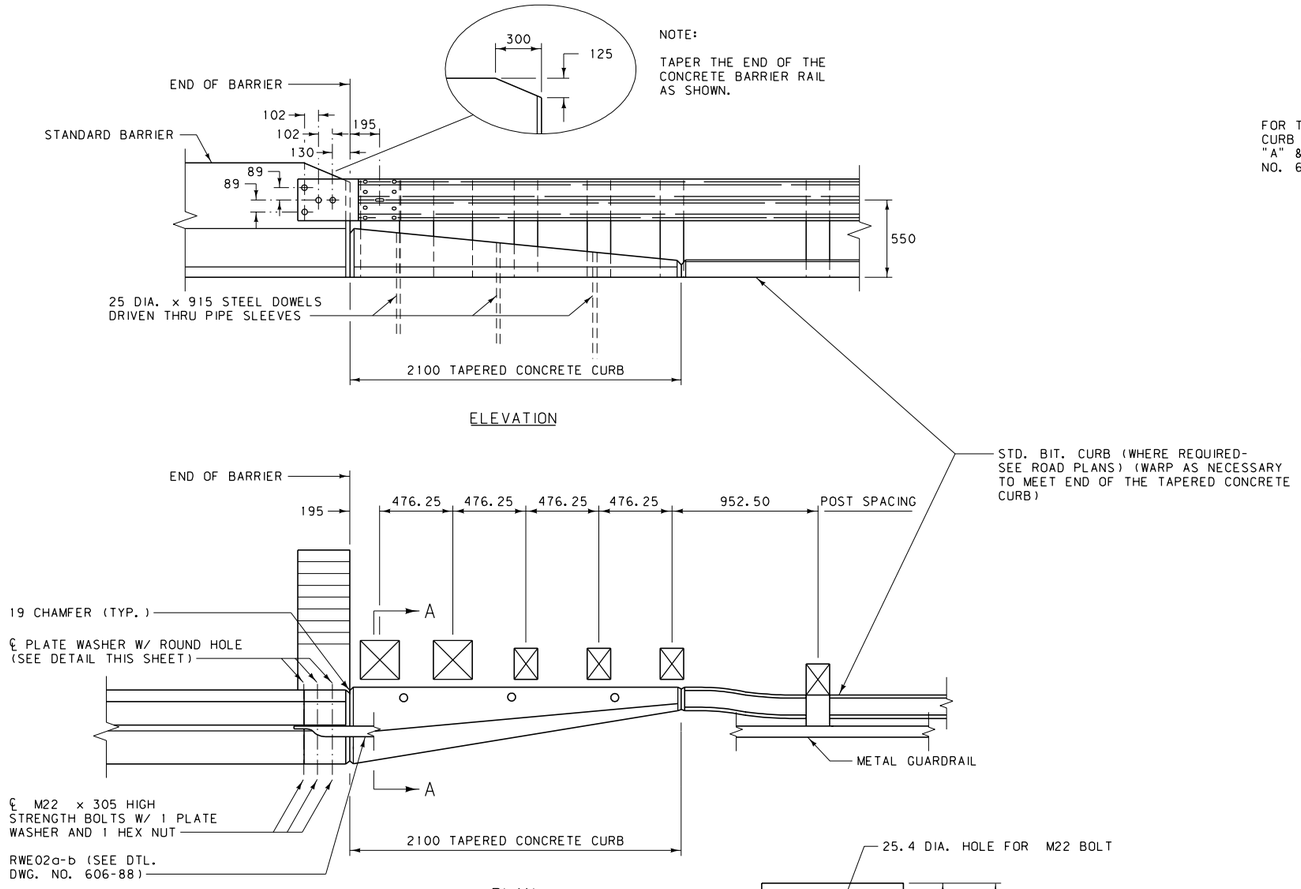

DETAIL "A"

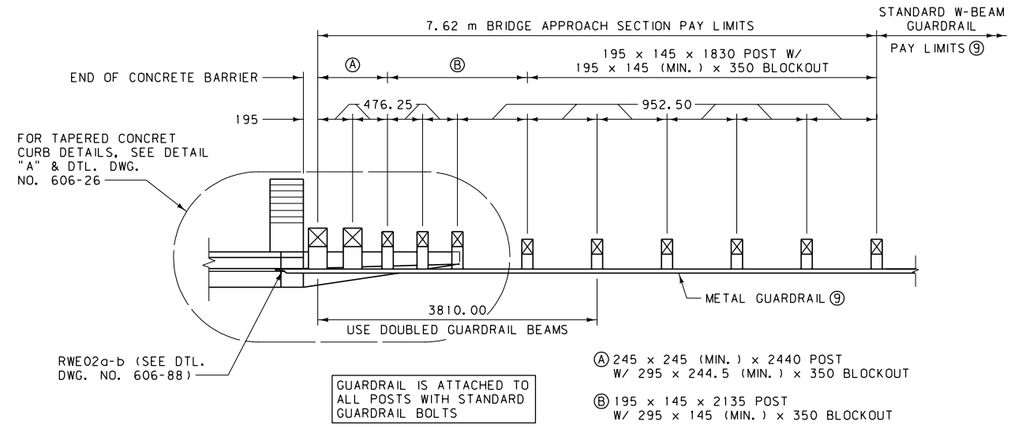

METAL GUARDRAIL-BRIDGE APPROACH SECTION TYPE 1

(FOR BRIDGES USING CONCRETE BARRIER RAIL)

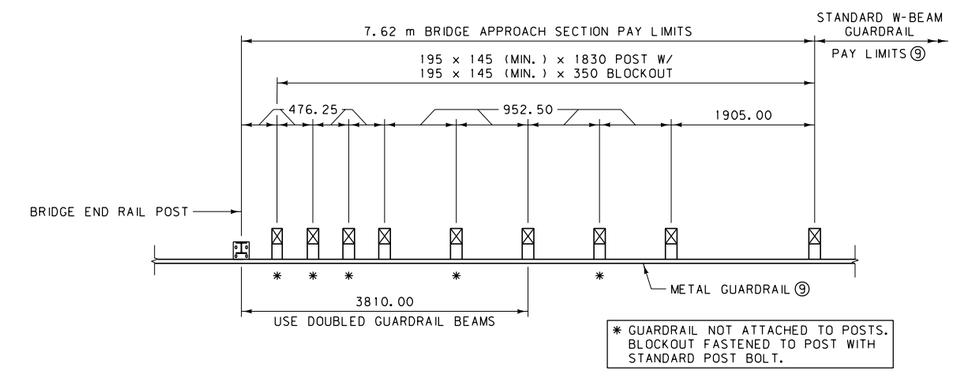

METAL GUARDRAIL-BRIDGE APPROACH SECTION TYPE 2

(FOR BRIDGES WITHOUT CURBS)

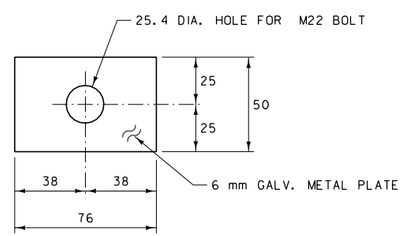

PLATE WASHER

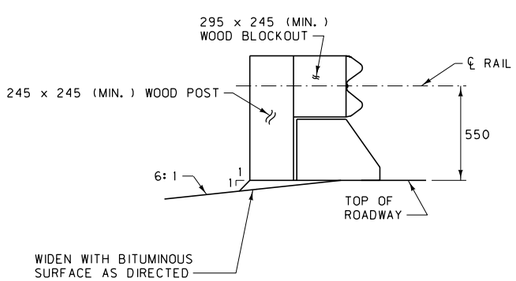

SECTION A-A

NOTES:

① TAPERED CONCRETE CURBS:
TYPE 1, SEE DTL. DWG. NO. 606-26
TYPE 3, SEE DTL. DWG. NO. 606-27

② TAPERED CONCRETE CURBS ARE ALSO REQUIRED ON CONCRETE APPROACH SLABS.

③ PORTIONS OF GUARDRAIL & BLOCKOUTS ARE OMITTED FOR CLARITY.

④ LAP GUARDRAIL IN THE DIRECTON OF THE ADJACENT TRAFFIC LANE. (SEE DTL. DWG. NO. 606-05A).

⑤ LAP W-BEAM TERMINAL CONNECTOR (RWE02a-b) IN THE DIRECTION OF THE ADJACENT TRAFFIC LANE.

⑥ USE WOOD BLOCKS OR OTHER NCHRP 350 APPROVED BLOCKS FOR BLOCKOUTS.

⑦ DO NOT FLARE BRIDGE APPROACH SECTIONS.

⑧ SEE DTL. DWG. NO. 606-25A FOR SKEWED BRIDGES.

⑨ SEE DTL. DWG. NO. 606-05A FOR METAL GUARDRAIL (W-BEAM).

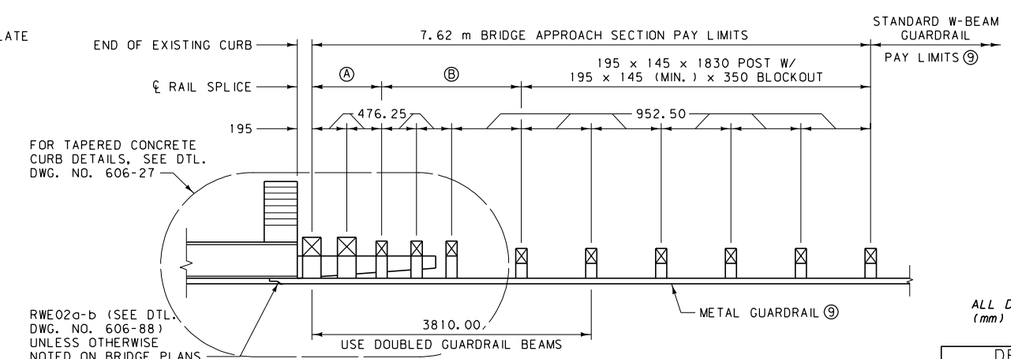

METAL GUARDRAIL-BRIDGE APPROACH SECTION TYPE 3

(FOR BRIDGES WITH EXISTING CONCRETE CURBS)

ALL DIMENSIONS ARE MILLIMETERS (mm) UNLESS OTHERWISE NOTED.

DETAILED DRAWING	
REFERENCE STANDARD SPEC. SECTION 606	DWG. NO. 606-24A
BRIDGE APPROACH SECTIONS - WOOD POSTS	
EFFECTIVE: FEBRUARY 2005	
serving you with pride	MONTANA DEPARTMENT OF TRANSPORTATION

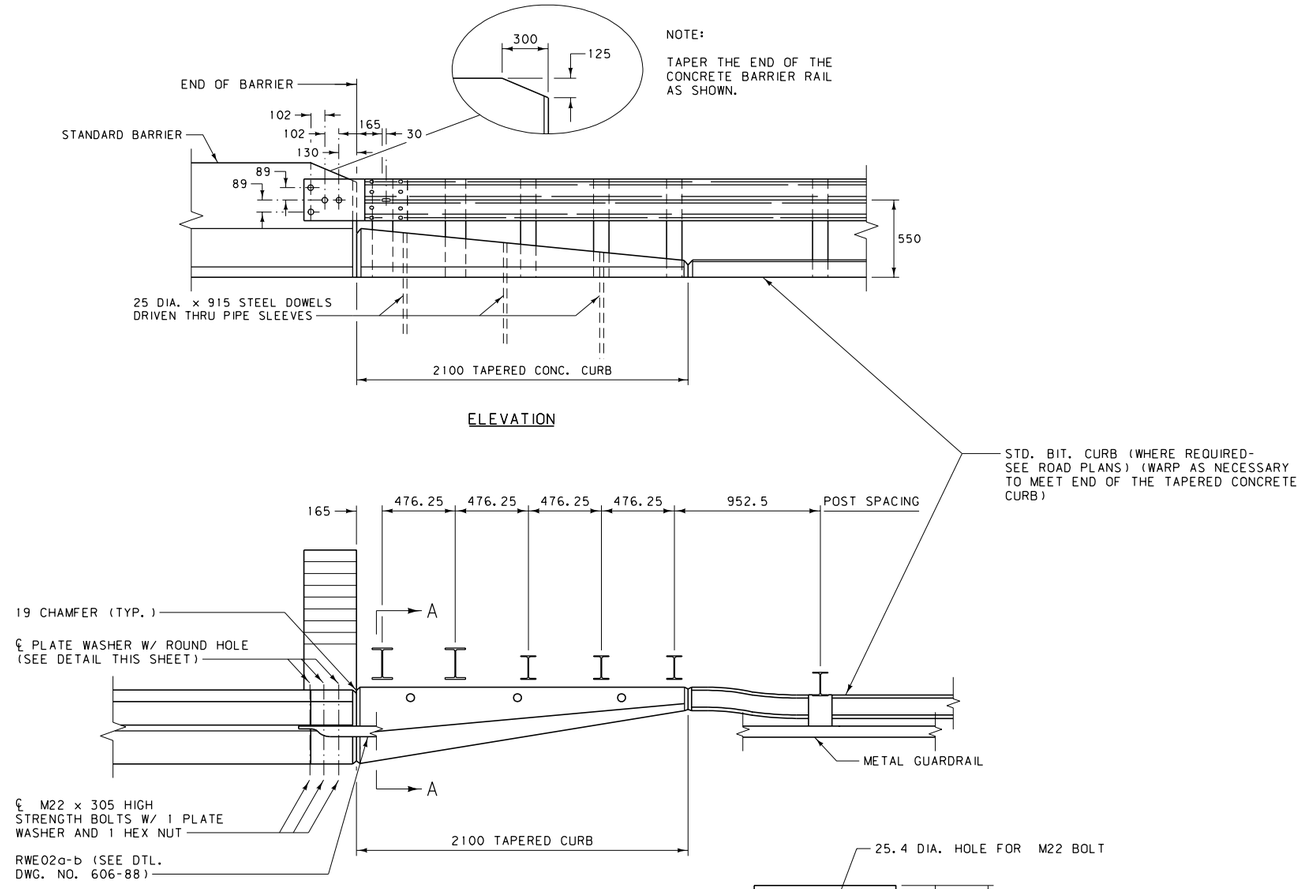

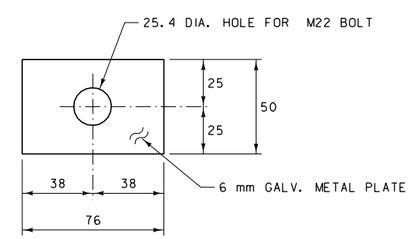

PLATE WASHER

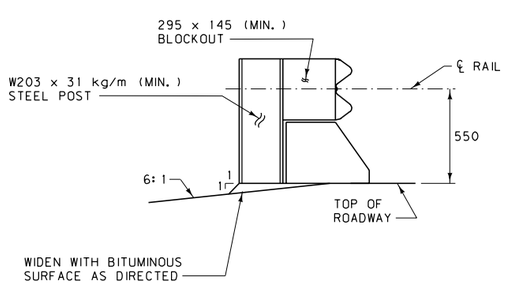

SECTION A-A

NOTES:

1. TAPERED CONCRETE CURBS:
   TYPE 1, SEE DTL. DWG. NO. 606-26
   TYPE 3, SEE DTL. DWG. NO. 606-27
2. TAPERED CONCRETE CURBS ARE ALSO REQUIRED ON CONCRETE APPROACH SLABS.
3. PORTIONS OF GUARDRAIL & BLOCKOUTS ARE OMITTED FOR CLARITY.
4. LAP GUARDRAIL IN THE DIRECTON OF THE ADJACENT TRAFFIC LANE. (SEE DTL. DWG. NO. 606-05B).
5. LAP W-BEAM TERMINAL CONNECTOR (RWE02a-b) IN THE DIRECTION OF THE ADJACENT TRAFFIC LANE.
6. USE ROUTED WOOD BLOCKS OR OTHER NCHRP 350 APPROVED BLOCKS FOR BLOCKOUTS.
7. DO NOT FLARE BRIDGE APPROACH SECTIONS.
8. SEE DTL. DWG. NO. 606-25B FOR SKEWED BRIDGES.
9. SEE DTL. DWG. NO. 606-05B FOR METAL GUARDRAIL (W-BEAM).

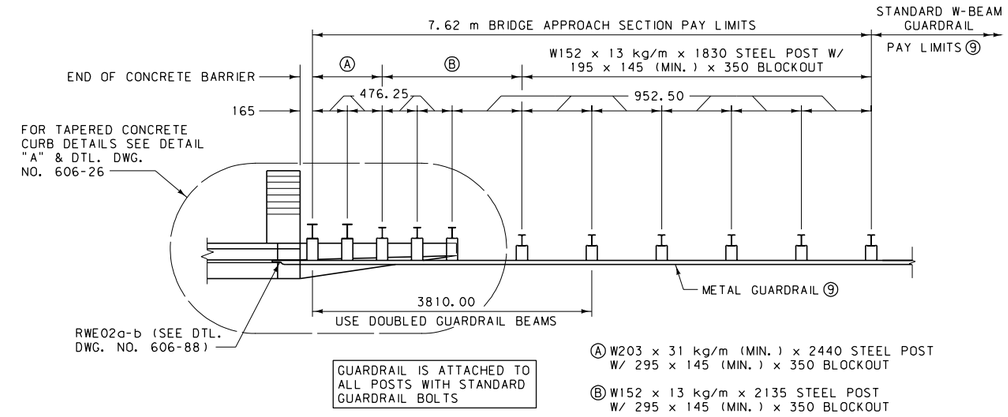

METAL GUARDRAIL-BRIDGE APPROACH SECTION TYPE 1

(FOR BRIDGES USING CONCRETE BARRIER RAIL)

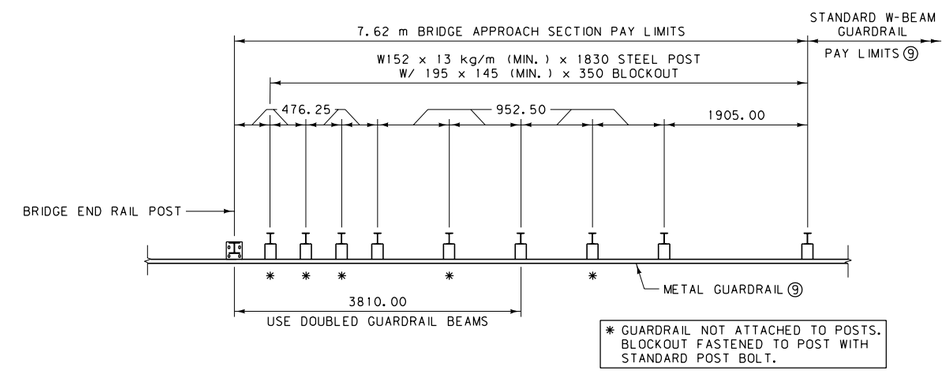

METAL GUARDRAIL-BRIDGE APPROACH SECTION TYPE 2

(FOR BRIDGES WITHOUT CURBS)

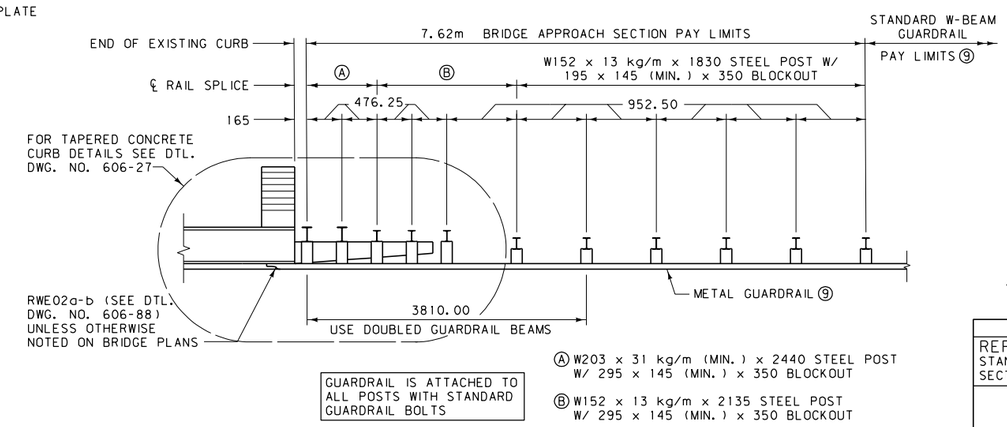

METAL GUARDRAIL-BRIDGE APPROACH SECTION TYPE 3

(FOR BRIDGES WITH EXISTING CONCRETE CURBS)

ALL DIMENSIONS ARE MILLIMETERS (mm) UNLESS OTHERWISE NOTED.

DETAILED DRAWING	
REFERENCE STANDARD SPEC. SECTION 606	DWG. NO. 606-24B
BRIDGE APPROACH SECTIONS - STEEL POSTS	
EFFECTIVE: FEBRUARY 2005	
serving you with pride	MONTANA DEPARTMENT OF TRANSPORTATION

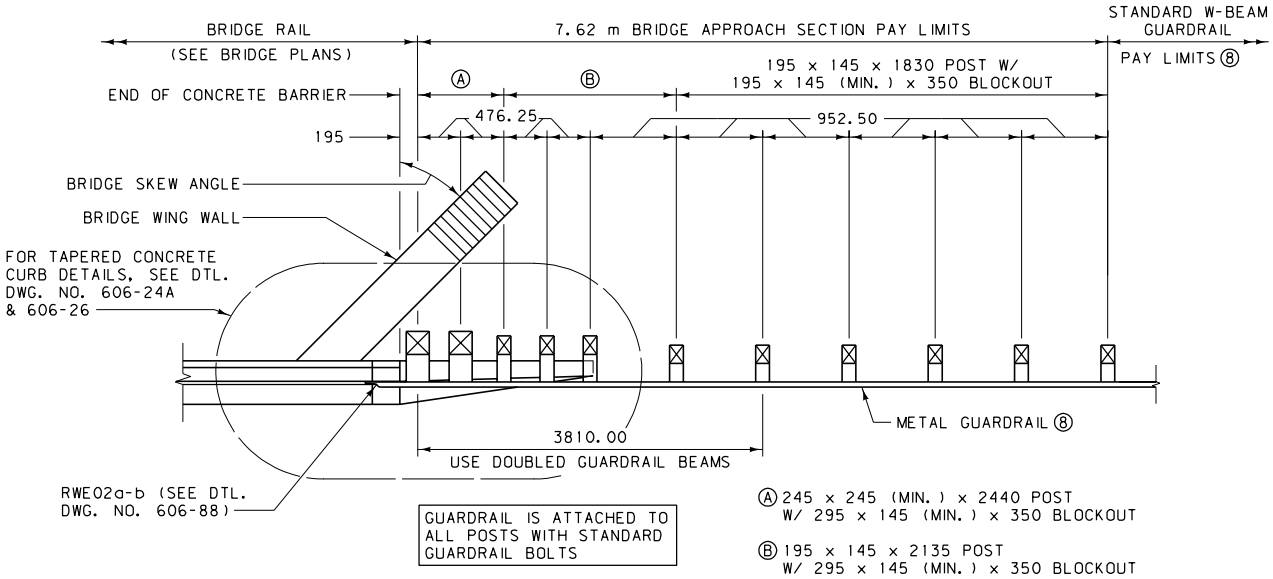

METAL GUARDRAIL-BRIDGE APPROACH SECTION TYPE 1

(FOR SKEWED BRIDGES USING CONCRETE BARRIER RAIL)

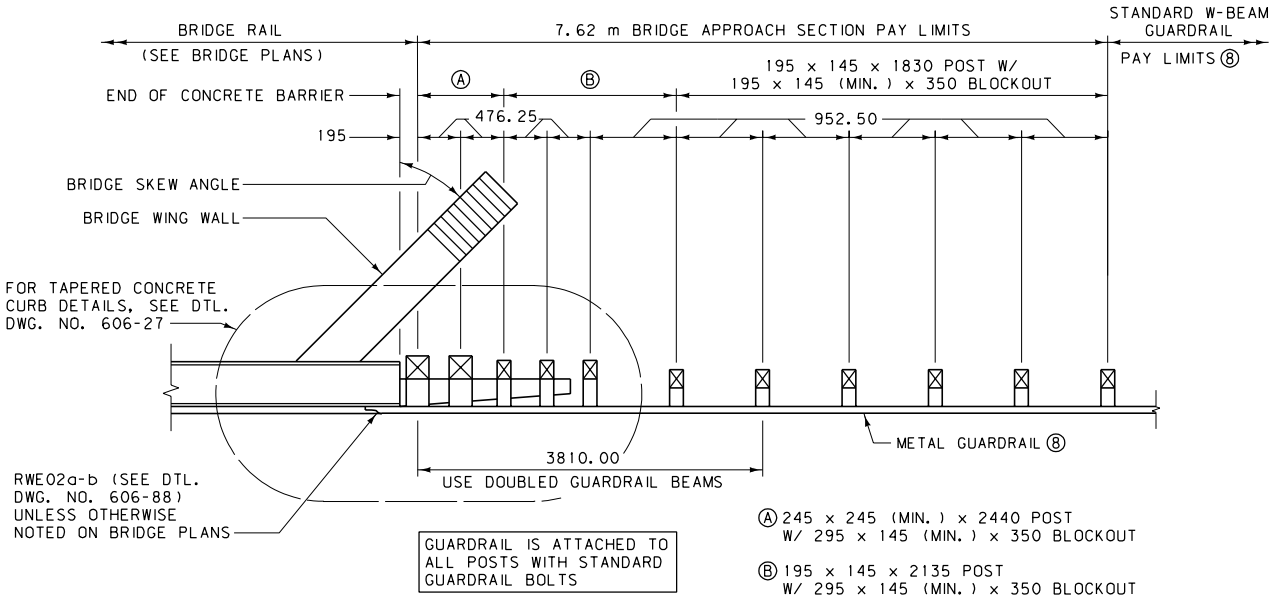

METAL GUARDRAIL-BRIDGE APPROACH SECTION TYPE 3

(FOR SKEWED BRIDGES WITH EXISTING CONCRETE CURBS)

NOTES:

① TAPERED CONCRETE CURBS:
TYPE 1, SEE DTL. DWG. NO. 606-26
TYPE 3, SEE DTL. DWG. NO. 606-27

② TAPERED CONCRETE CURBS ARE ALSO REQUIRED ON CONCRETE APPROACH SLABS.

③ LAP GUARDRAIL IN THE DIRECTON OF THE ADJACENT TRAFFIC LANE. (SEE DTL. DWG. NO. 606-05A).

④ LAP W-BEAM TERMINAL CONNECTOR (RWE02a-b) IN THE DIRECTION OF THE ADJACENT TRAFFIC LANE.

⑤ USE WOOD BLOCKS OR OTHER NCHRP 350 APPROVED BLOCKS FOR BLOCKOUTS.

⑥ DO NOT FLARE BRIDGE APPROACH SECTIONS.

⑦ SEE DTL. DWG. NO. 606-24A FOR ADDITIONAL INFORMATION.

⑧ SEE DTL. DWG. NO. 606-05A FOR METAL GUARDRAIL (W-BEAM).

ALL DIMENSIONS ARE MILLIMETERS (mm) UNLESS OTHERWISE NOTED.

DETAILED DRAWING	
REFERENCE STANDARD SPEC. SECTION 606	DWG. NO. 606-25A
SKEWED BRIDGE APPROACH SECTIONS - WOOD POSTS	
EFFECTIVE: FEBRUARY 2005	
serving you with pride	MONTANA DEPARTMENT OF TRANSPORTATION

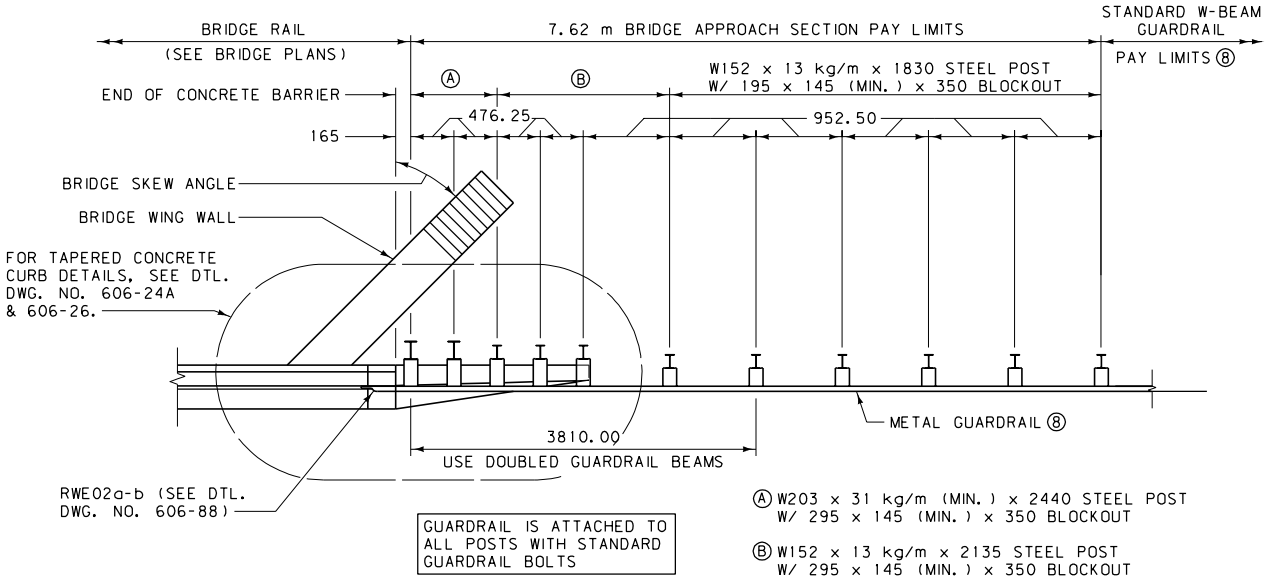

METAL GUARDRAIL-BRIDGE APPROACH SECTION TYPE 1

(FOR SKEWED BRIDGES USING CONCRETE BARRIER RAIL)

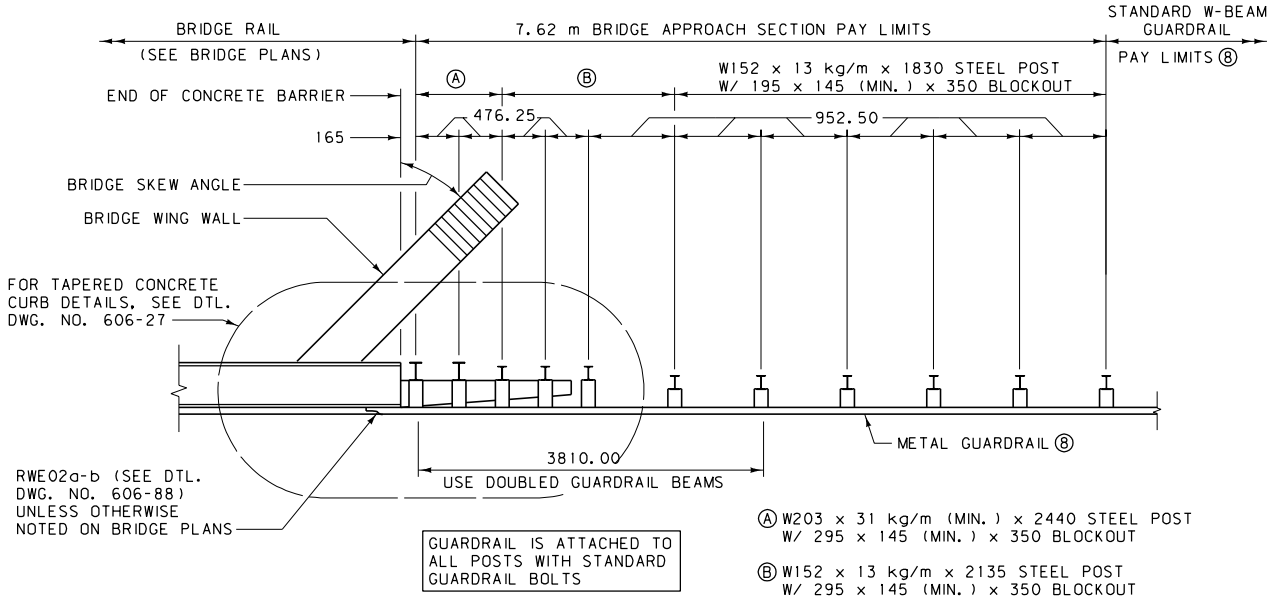

METAL GUARDRAIL-BRIDGE APPROACH SECTION TYPE 3

(FOR SKEWED BRIDGES WITH EXISTING CONCRETE CURBS)

NOTES:

① TAPERED CONCRETE CURBS:
TYPE 1, SEE DTL. DWG. NO. 606-26
TYPE 3, SEE DTL. DWG. NO. 606-27

② TAPERED CONCRETE CURBS ARE ALSO REQUIRED ON CONCRETE APPROACH SLABS.

③ LAP GUARDRAIL IN THE DIRECTON OF THE ADJACENT TRAFFIC LANE. (SEE DTL. DWG. NO. 606-05B).

④ LAP W-BEAM TERMINAL CONNECTOR (RWE02a-b) IN THE DIRECTION OF THE ADJACENT TRAFFIC LANE.

⑤ USE WOOD BLOCKS OR OTHER NCHRP 350 APPROVED BLOCKS FOR BLOCKOUTS.

⑥ DO NOT FLARE BRIDGE APPROACH SECTIONS.

⑦ SEE DTL. DWG. NO. 606-24B FOR ADDITIONAL INFORMATION.

⑧ SEE DTL. DWG. NO. 606-05B FOR METAL GUARDRAIL (W-BEAM).

ALL DIMENSIONS ARE MILLIMETERS (mm) UNLESS OTHERWISE NOTED.

DETAILED DRAWING	
REFERENCE STANDARD SPEC. SECTION 606	DWG. NO. 606-25B
SKEWED BRIDGE APPROACH SECTIONS - STEEL POSTS	
EFFECTIVE: FEBRUARY 2005	
serving you with pride	MONTANA DEPARTMENT OF TRANSPORTATION

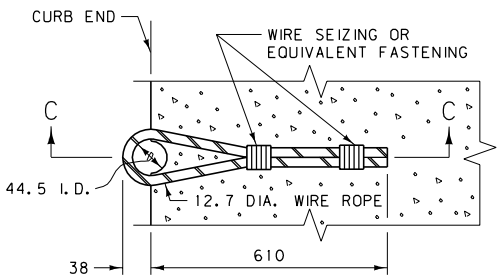

WIRE ROPE DETAIL

BILL OF REINFORCING STEEL (ONE SECTION ONLY)

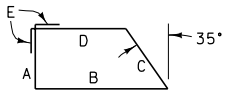

TYPE 1

BENT BARS (ALL DIMENSIONS ARE OUT TO OUT)

MARK	SIZE	NO.	TYPE	LENGTH	A	B	C	D	E
C1	#13	1	1	1360	270	395	330	205	80
C2				1225	240	350	290	185	
C3				1090	205	310	255	160	
C4				955	175	265	215	140	
C5				820	145	220	175	120	
C6				695	115	180	140	100	
C7				555	80	135	100	80	80
C8		1	1	415	50	90	60	55	40
B1	#13	4	STRAIGHT	2020	~	~	~	~	~

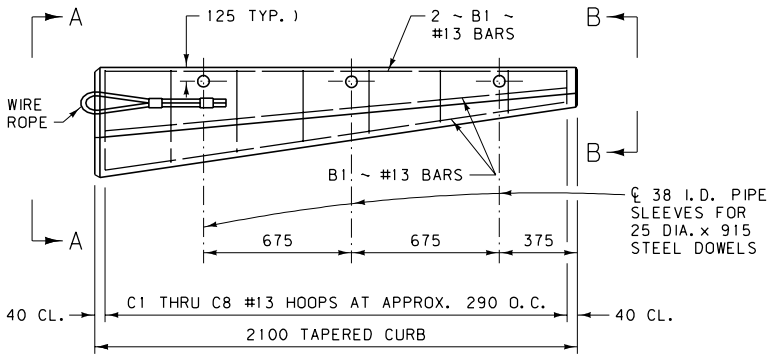

PLAN

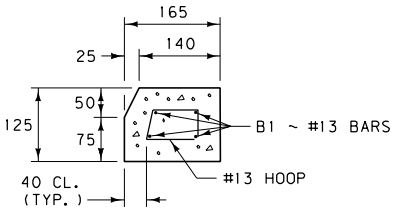

VIEW B-B

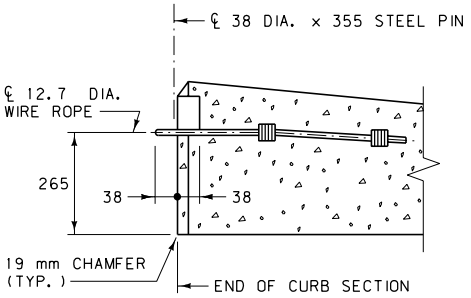

SECTION C-C

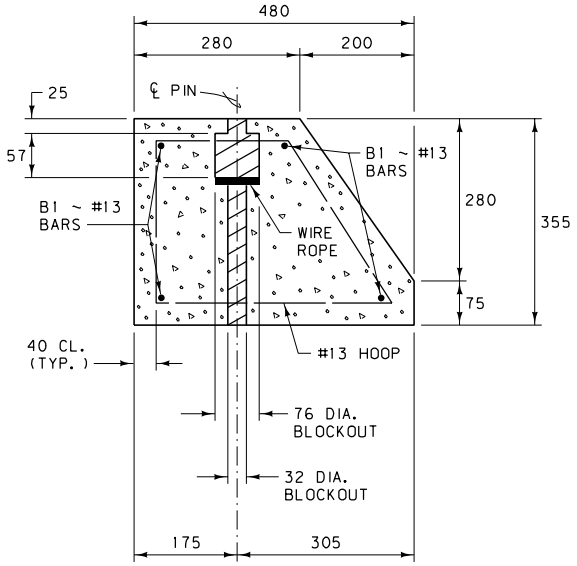

VIEW A-A

NOTES:

① TAPERED CONCRETE CURB IS USED WITH BRIDGE APPROACH SECTION TYPE 1 (SEE DTL. DWG. NO. 606-24A AND 606-24B).

② WIRE ROPE CONSISTS OF ZINC-COATED STEEL WIRE 7 STRAND UTILITY GRADE WITH A MINIMUM BREAKING STRENGTH OF 111.2 kN, COMFORMING TO ASTM SPECIFICATION A 475.

③ ALL REINFORCING STEEL IS OF THE DEFORMED TYPE, MEETING THE REQUIREMENTS OF AASHTO M 31M (ASTM A 615M, GRADE 420).

④ ALL CONCRETE IS CLASS "DD".
TOTAL CONCRETE PER 2100 mm TAPERED CURB EST. = 0.17 m³.
TOTAL REBAR WEIGHT PER 2100 mm TAPERED CURB EST. = 15.1 kg.

ALL DIMENSIONS ARE MILLIMETERS (mm) UNLESS OTHERWISE NOTED.

DETAILED DRAWING

REFERENCE
STANDARD SPEC.
SECTION 606

DWG. NO.
606-26

TAPERED CONCRETE
CURB DETAIL

EFFECTIVE: FEBRUARY 2005

MDT serving you with pride

MONTANA DEPARTMENT OF TRANSPORTATION

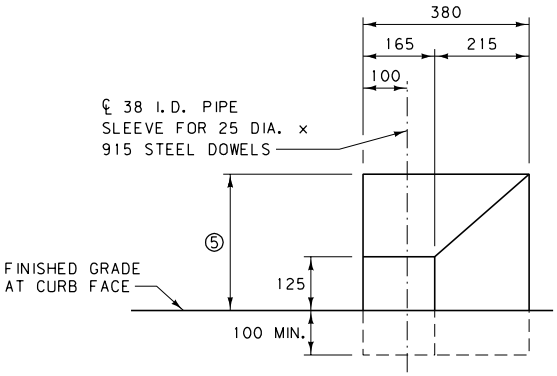

END VIEW

BILL OF REINFORCING STEEL (ONE SECTION ONLY)						
TYPE 1						
BENT BARS (ALL DIMENSIONS ARE OUT TO OUT)						
MARK	SIZE	NO.	TYPE	LENGTH	A	B
C1	#13	1	1	390	150	90
C2				480	175	130
C3				570	200	170
C4				665	225	215
C5				755	250	255
C6		1	1	845	270	295
B1		4	STRAIGHT	1720	~	~
B2	#13	2	STRAIGHT	600	~	~

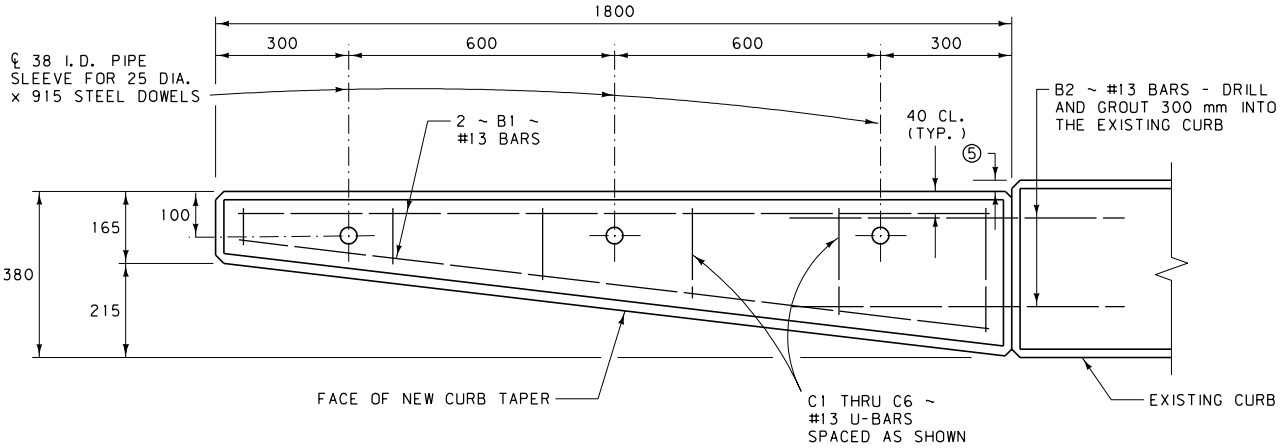

PLAN

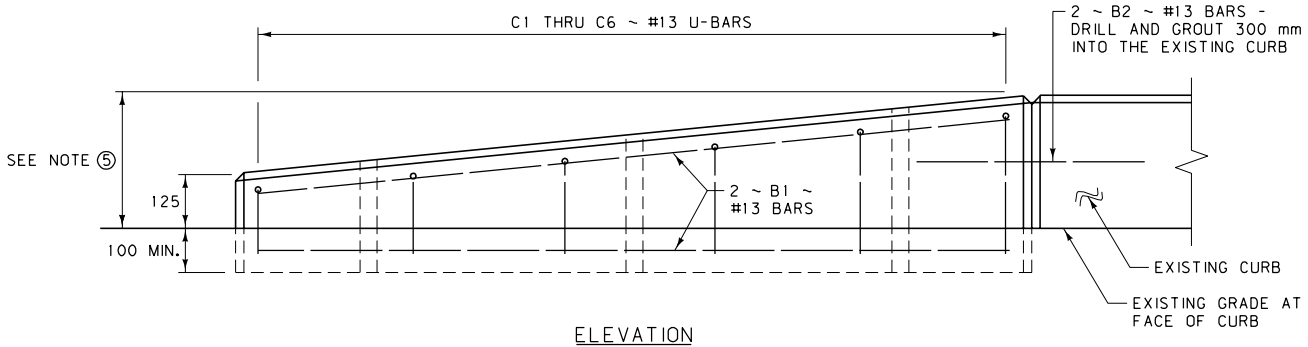

ELEVATION

NOTES:

① REMOVE THE EXISTING SURFACE UNDER THE NEW TAPERED CONCRETE CURB AS APPROVED BY THE ENGINEER. EMBED THE TAPERED CONCRETE CURB A MINIMUM OF 100 mm BELOW THE GRADE MEASURED AT THE INSIDE FACE OF THE TAPER.

② ALL REINFORCING STEEL IS OF THE DEFORMED TYPE, MEETING THE REQUIREMENTS OF AASHTO M 31M (ASTM A 615M, GRADE 420).

③ ALL CONCRETE IS CLASS "DD".
TOTAL CONCRETE PER 1800 mm TAPERED CURB EST. = 0.16 m³.
TOTAL REBAR WEIGHT PER 1800 mm TAPERED CURB EST. = 11.7 kg.

④ TAPERED CONCRETE CURB IS USED WITH BRIDGE APPROACH SECTION TYPE 3 (SEE DTL. DWG. NO. 606-24A AND 606-24B).

⑤ ADJUST DIMENSION TO MATCH EXISTING CURB.

ALL DIMENSIONS ARE MILLIMETERS (mm) UNLESS OTHERWISE NOTED.

DETAILED DRAWING

REFERENCE STANDARD SPEC. SECTION 606

DWG. NO. 606-27

TAPERED CONCRETE CURB DETAIL

EFFECTIVE: FEBRUARY 2005

MDT serving you with pride — MONTANA DEPARTMENT OF TRANSPORTATION

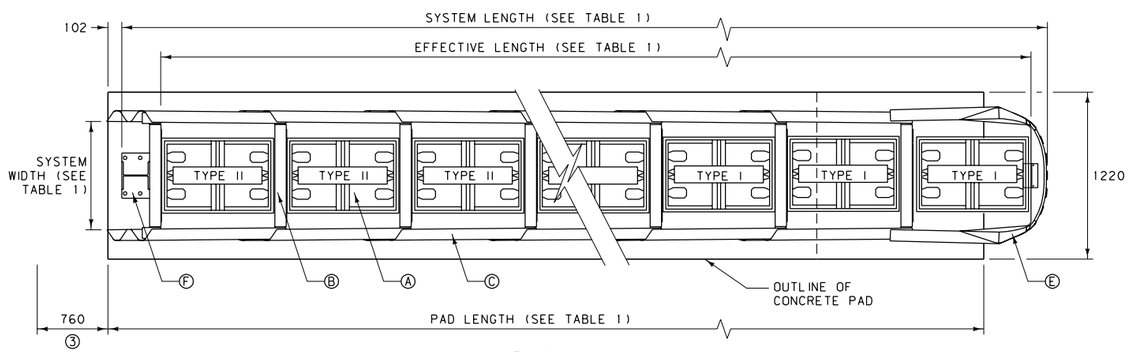

PLAN

Ⓐ QUADGUARD CARTRIDGE
Ⓑ DIAPHRAGM
Ⓒ FENDER PANEL
Ⓓ MONORAIL
Ⓔ NOSE ASSEMBLY
Ⓕ BACK UP
NOT INCLUDED IN MODEL NUMBER, ORDER SEPARATELY

UNIDIRECTIONAL TRAFFIC ①

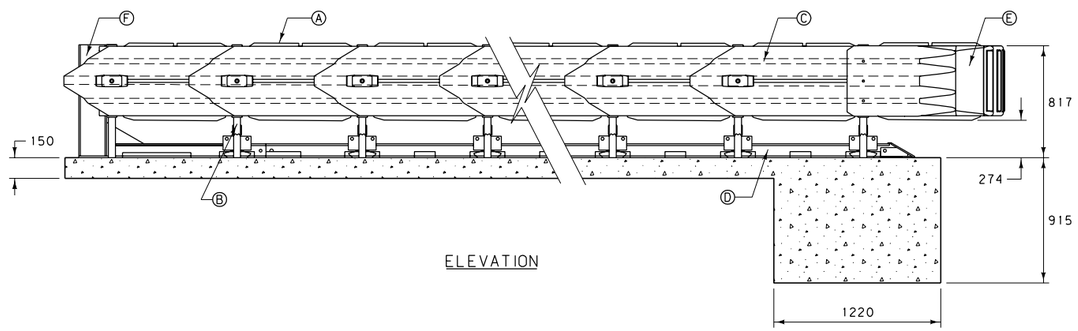

ELEVATION

TABLE 1:

BAYS	610 WIDTH MODEL NO.	760 WIDTH MODEL NO.	915 WIDTH MODEL NO.	SYSTEM L (m)	EFFECTIVE L (m)	PAD L (m)	MAX DESIGN SPEED (km/hr)	NO. OF CARTRIDGES	
								TYPE I	TYPE II
1	QS2401*	QS3001*	QS3601*	2.16	1.73	2.74	40	2	0
2	QS2402*	QS3002*	QS3602*	3.08	2.64	2.74	60	2	1
3	QS2403*	QS3003*	QS3603*	4.00	3.56	3.66	70	3	1
4	QS2404*	QS3004*	QS3604*	4.91	4.47	4.57	80	3	2
5	QS2405*	QS3005*	QS3605*	5.83	5.38	5.49	90	4	2
6	QS2406*	QS3006*	QS3606*	6.74	6.30	6.40	100	4	3
7	QS2407*	QS3007*	QS3607*	7.65	7.21	7.32	105	4	4
8	QS2408*	QS3008*	QS3608*	8.57	8.13	8.23	110	4	5
9	QS2409*	QS3009*	QS3609*	9.49	9.04	9.14	115	4	6
10	QS2410*	QS3010*	QS3610*	10.40	9.96	10.06	120	5	6
11	QS2411*	QS3011*	QS3611*	11.32	10.87	10.97	120	5	7
12	QS2412*	QS3012*	QS3612*	12.23	11.79	11.89	120	5	8

* G = GREY OR Y = YELLOW

NOTES:

① ATTACHMENT SHOWN IS TO SHAPES WITH RECTANGULAR CROSS SECTIONS SUCH AS: PIERS, PARAPETS AND MODIFIED CONCRETE BARRIER RAIL. TRAFFIC FLOW IS UNIDIRECTIONAL. ATTACHMENTS AND TRANSITIONS TO OTHER SHAPES, BARRIERS, RAILINGS AND BIDIRECTIONAL TRAFFIC FLOWS ARE AVAILABLE FROM THE MANUFACTURER.

② THE SYSTEM SHOWN INCLUDES THE TENSION STRUT BACKUP ASSEMBLY AND THE CONCRETE PAD AS DETAILED. SEE THE MANUFACTURER FOR DRAWINGS DETAILING THE REINFORCING STEEL FOR THE CONCRETE PAD AND FOR OTHER BACKUP & CONCRETE PAD OPTIONS.

③ PROVIDE ADEQUATE CLEARANCE FOR THE DISTANCE SHOWN TO ALLOW FENDER PANELS TO SLIDE REARWARD UPON IMPACT.

④ SEE MANUFACTURER FOR MORE INFORMATION ON SPECIFIC DESIGNS, INSTALLATION AND MAINTENANCE OF THE QUADGUARD SYSTEM.

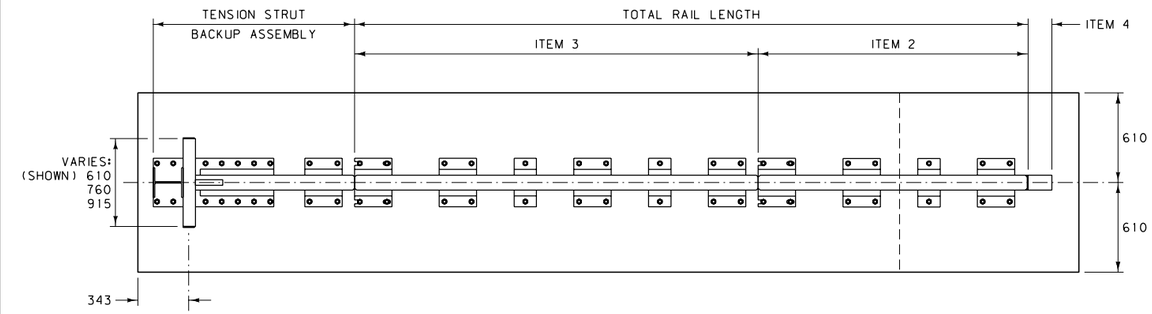

PLAN

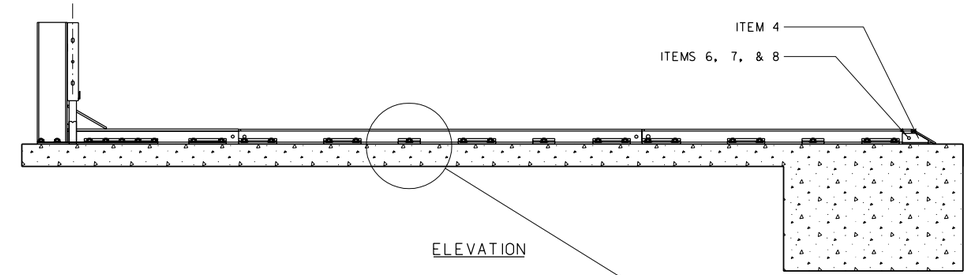

ELEVATION

MONORAIL ASSEMBLY
(TYPICAL 6 BAY ASSEMBLY)

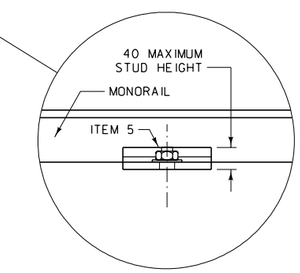

TABLE 2:

ITEM	STOCK NO.	DESCRIPTION	REQ'D
1	2760051-0000	MONORAIL, ONE BAY	#
2	2760061-0000	MONORAIL, TWO BAYS	#
3	2760071-0000	MONORAIL, THREE BAYS	#
4	2760041-0000	MONORAIL END CAP	1
5	3525300-0000	ANCHOR KIT	#
6	2699571-0000	M16 x 89 HEX BOLT	1
7	2704141-0000	M16 HEX NUT	1
8	2708231-0000	M16 LOCK WASHER	1

TABLE 3:

ASSEMBLY NO.	TOTAL RAIL LENGTH	# ITEM 1	# ITEM 2	# ITEM 3	# ITEM 5	NO. OF BAYS
3540060-0100	0	0	0	0	0	1
3540060-0200	915	1	0	0	2	2
3540060-0300	1830	0	1	0	3	3
3540060-0400	2745	0	0	1	4	4
3540060-0500	3660	1	0	1	5	5
3540060-0600	4575	0	1	1	6	6
3540060-0700	5490	0	0	2	7	7
3540060-0800	6405	1	0	2	8	8
3540060-0900	7320	0	1	2	9	9
3540060-1000	8235	0	0	3	10	10
3540060-1100	9150	1	0	3	12	11
3540060-1200	10 065	0	1	3	13	12

ALL DIMENSIONS ARE MILLIMETERS (mm) UNLESS OTHERWISE NOTED.

DETAILED DRAWING

REFERENCE STANDARD SPEC. SECTION 606

DWG. NO. 606-30A

IMPACT ATTENUATOR - QUADGUARD

EFFECTIVE: FEBRUARY 2005

MDT serving you with pride — MONTANA DEPARTMENT OF TRANSPORTATION

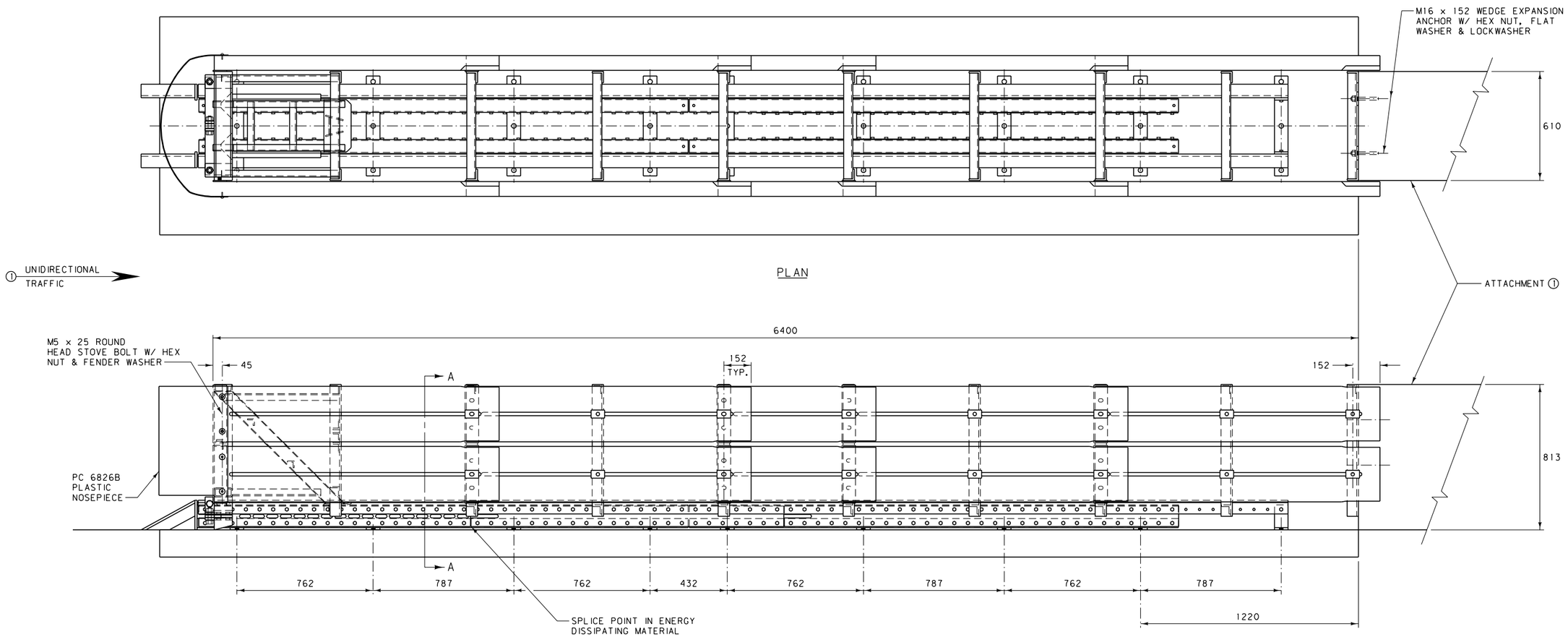

ELEVATION

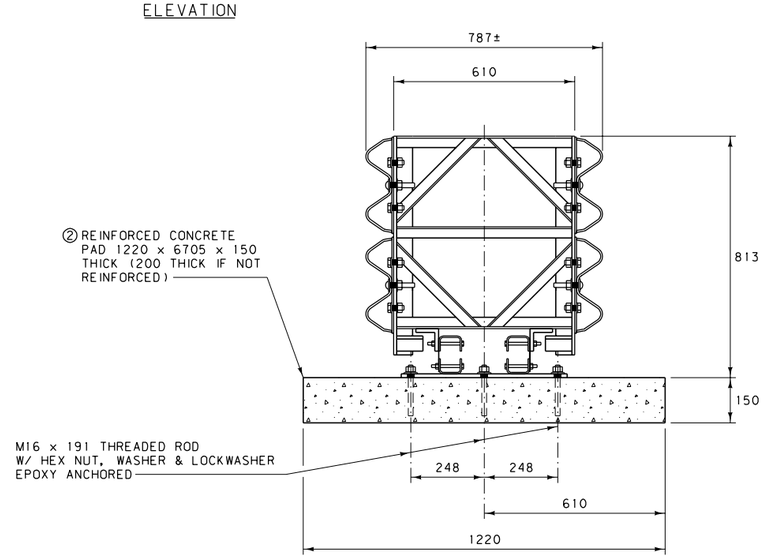

SECTION A-A

BILL OF MATERIAL			
	PC	QTY	DESCRIPTION
*	970A	1	TRACC UNIT ASSEMBLY
	3310G	4	M16 LOCKWASHER
	4451G	4	M16 x 152 WEDGE EXP. ANCHOR
	6707G	8	M5 x 25 RND. HEAD STOVE BOLT
	6708G	8	M5 HEX NUT
	6709G	8	M5 FENDER WASHER (19 O.D.)
	6825B	4	REFLECTIVE TAPE
	6826B	1	PLASTIC NOSEPIECE
	ANCHOR HARDWARE (CONCRETE BASE)		
	6352G	27	M16 x 191 THREADED ROD
	3310G	27	M16 LOCKWASHER
	3361G	27	M16 HEX NUT
	3300G	27	M16 FLAT WASHER
	4747G	2	KELKEN EPOXY (QUART CAN)
	ANCHOR HARDWARE (ASPHALT BASE)		
	6380G	27	M16 x 457 THREADED ROD
	3310G	27	M16 LOCKWASHER
	3361G	27	M16 HEX NUT
	3300G	27	M16 FLAT WASHER
	4747G	6	KELKEN EPOXY (QUART CAN)

* SEE DET. DWG. NO. 606-31B

NOTES:

① ATTACHMENT SHOWN IS TO SHAPES WITH RECTANGULAR CROSS SECTIONS SUCH AS: PIERS, PARAPETS, AND MODIFIED CONCRETE BARRIER RAIL. TRAFFIC FLOW IS UNIDIRECTIONAL. ATTACHMENTS AND TRANSITIONS TO OTHER SHAPES, BARRIERS, RAILINGS AND BIDIRECTIONAL TRAFFIC FLOWS ARE AVAILABLE FROM THE MANUFACTURER.

② REINFORCEMENT DRAWINGS FOR THE CONCRETE PAD SHOWN, AS WELL AS OTHER PAD SIZES ARE AVAILABLE FROM THE MANUFACTURER.

③ SEE MANUFACTURER FOR MORE INFORMATION ON SPECIFIC DESIGNS, INSTALLATION AND MAINTENANCE OF THE TRACC SYSTEM.

ALL DIMENSIONS ARE MILLIMETERS (mm) UNLESS OTHERWISE NOTED.

DETAILED DRAWING

REFERENCE STANDARD SPEC. SECTION 606

DWG. NO. 606-30B

IMPACT ATTENUATOR - TRACC

EFFECTIVE: FEBRUARY 2005

MDT serving you with pride — MONTANA DEPARTMENT OF TRANSPORTATION

ITEM	STOCK NO.	DESCRIPTION	REQ'D
1	SEE TABLE A	DIAPHRAGM	1
8	2760091-0000	MONORAIL GUIDE	2
9	2704341-0000	M20 HEX NUT	4
10	2699121-0000	M20 x 51 HEX BOLT	4
11	2708201-0000	M20 LOCK WASHER	4
12	2760292-0000	CARTRIDGE SUPPORT BRACKET	2

TABLE A:

ASSEMBLY NO.	STOCK NO.	DESCRIPTION
3540071-0000	2761011-0000	610 WIDE DIAPHRAGM
3540072-0000	2761021-0000	760 WIDE DIAPHRAGM
3540073-0000	2761031-0000	915 WIDE DIAPHRAGM

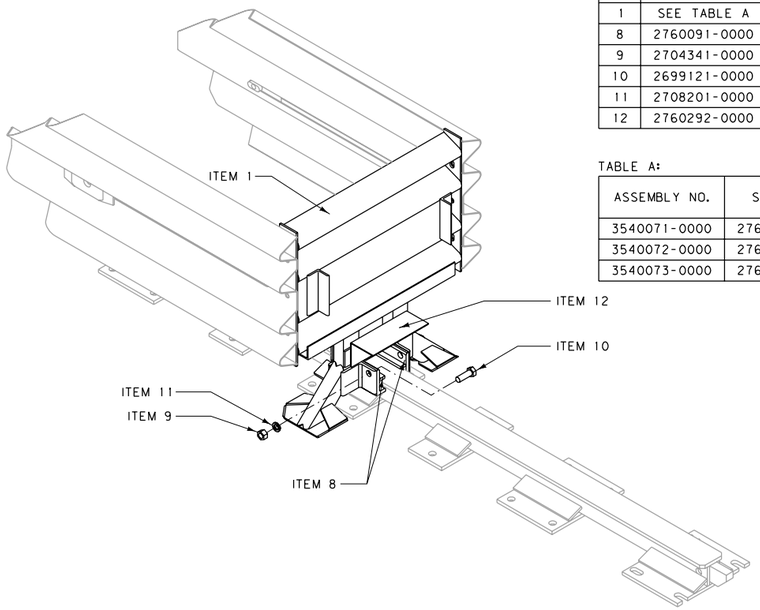

DIAPHRAGM ASSEMBLY

ITEM	STOCK NO.	DESCRIPTION	REQ'D
1	3540130-0*00	NOSE, W/ SUPPORT BRACKET	1
2	2699341-0000	M16 x 51 RAIL BOLT	6
3	2704191-0000	M16 HEX NUT	6
4	2708871-0000	WASHER (BAR 3.2 x 32 x 51, W/ M16 HOLE)	6
5	2760251-0000	PULL-OUT BRACKET	2

* 0 INDICATES GRAY
* 1 INDICATES YELLOW

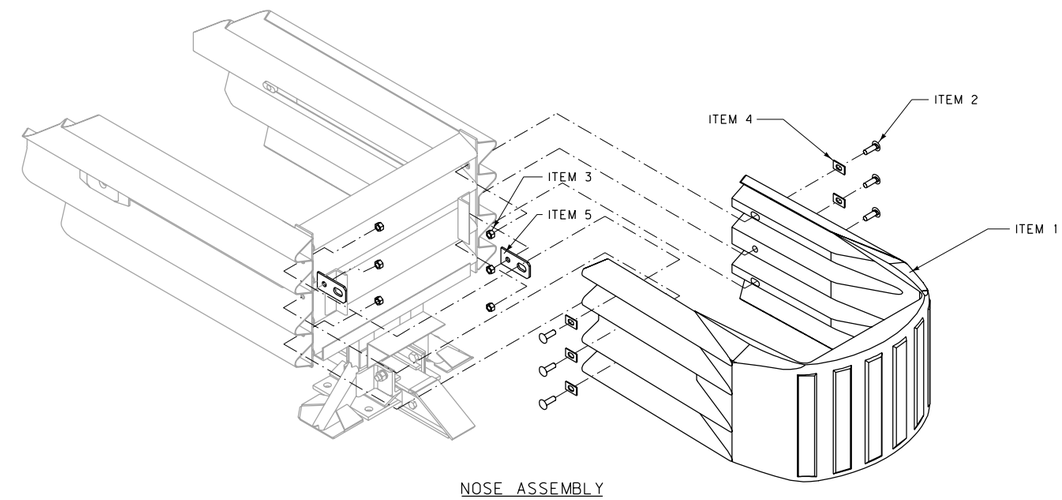

NOSE ASSEMBLY

ASSEMBLY NO. 3540050-0100 (YELLOW)
ASSEMBLY NO. 3540050-0000 (GRAY)

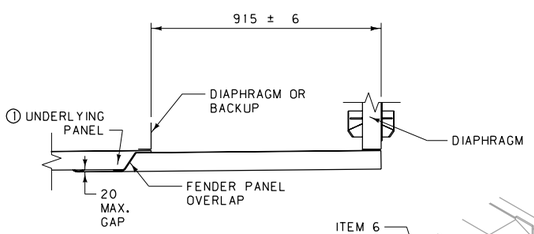

ITEM	STOCK NO.	DESCRIPTION	REQ'D
1	2760081-0000	FENDER PANEL	1
2	2699341-0000	M16 x 51 RAIL BOLT	2
3	2704191-0000	M16 HEX NUT	2
4	2708841-0000	CAST MUSHROOM WASHER	1
5	2706604-0000	M16 x 127 SCREW	1
6	2704141-0000	M16 HEX NUT	1
7	2708291-0000	M16 WASHER	4
8	2021611-0000	ELASTOMERIC BUSHING	1

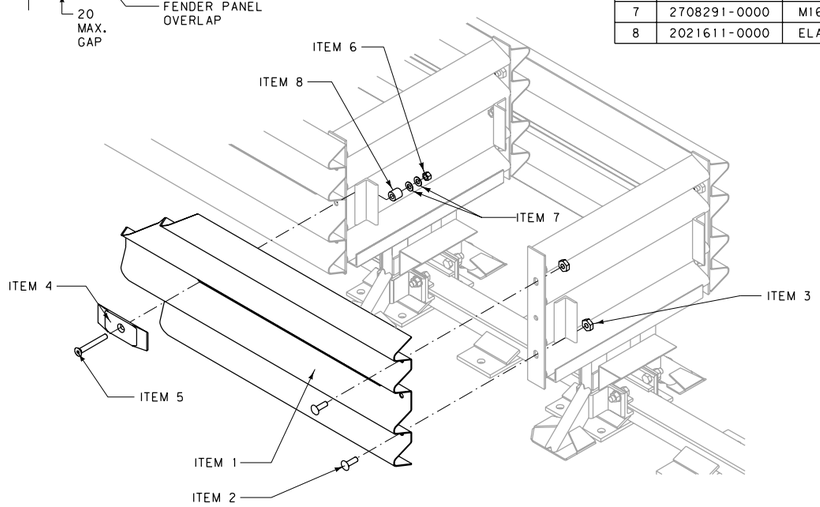

NOTE:

① UNDERLYING PANEL IS EITHER ANOTHER FENDER PANEL OR, IN THE CASE OF THE LAST FENDER PANEL IT COULD BE A BACKUP SIDE PANEL, EXTENSION PANEL OR TRANSITION PANEL.

② TWO FENDER PANEL ASSEMBLIES ARE REQUIRED PER BAY.

FENDER PANEL ASSEMBLY

ASSEMBLY NO. 3540040-0000

ITEM	STOCK NO.	DESCRIPTION	REQ'D
1	SEE TABLE A	TENSION BACKUP	1
2	2760141-0000	SIDE PANEL	2
9	3525300-0000	ANCHOR KIT	3
10	2704191-0000	M16 HEX NUT	4
11	2699341-0000	M16 x 51 RAIL BOLT	4
12	2760293-0000	CARTRIDGE SUPPORT BRACKET	1
13	2760294-0000	CARTRIDGE SUPPORT LOCKING BAR	1

TABLE A:

ASSEMBLY NO.	STOCK NO.	DESCRIPTION
3540031-0000	2760011-0000	610 WIDE TENSION BACKUP
3540032-0000	2760021-0000	760 WIDE TENSION BACKUP
3540033-0000	2760031-0000	915 WIDE TENSION BACKUP

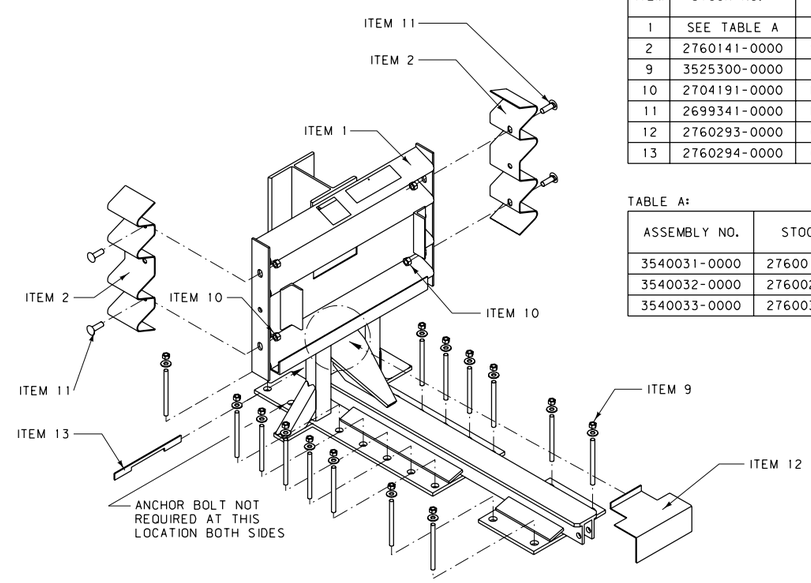

BACKUP ASSEMBLY

NOTE:

③ WHEN TRANSITIONING THE QUADGUARD SYSTEM TO EXISTING BARRIERS, SEE MANUFACTURER FOR PROPER USE OF SIDE PANEL (ITEM 2).

ALL DIMENSIONS ARE MILLIMETERS (mm) UNLESS OTHERWISE NOTED.

DETAILED DRAWING

REFERENCE
STANDARD SPEC.
SECTION 606

DWG. NO. 606-31A

IMPACT ATTENUATOR - QUADGUARD ASSEMBLY DETAILS

EFFECTIVE: FEBRUARY 2005

MDT serving you with pride — MONTANA DEPARTMENT OF TRANSPORTATION

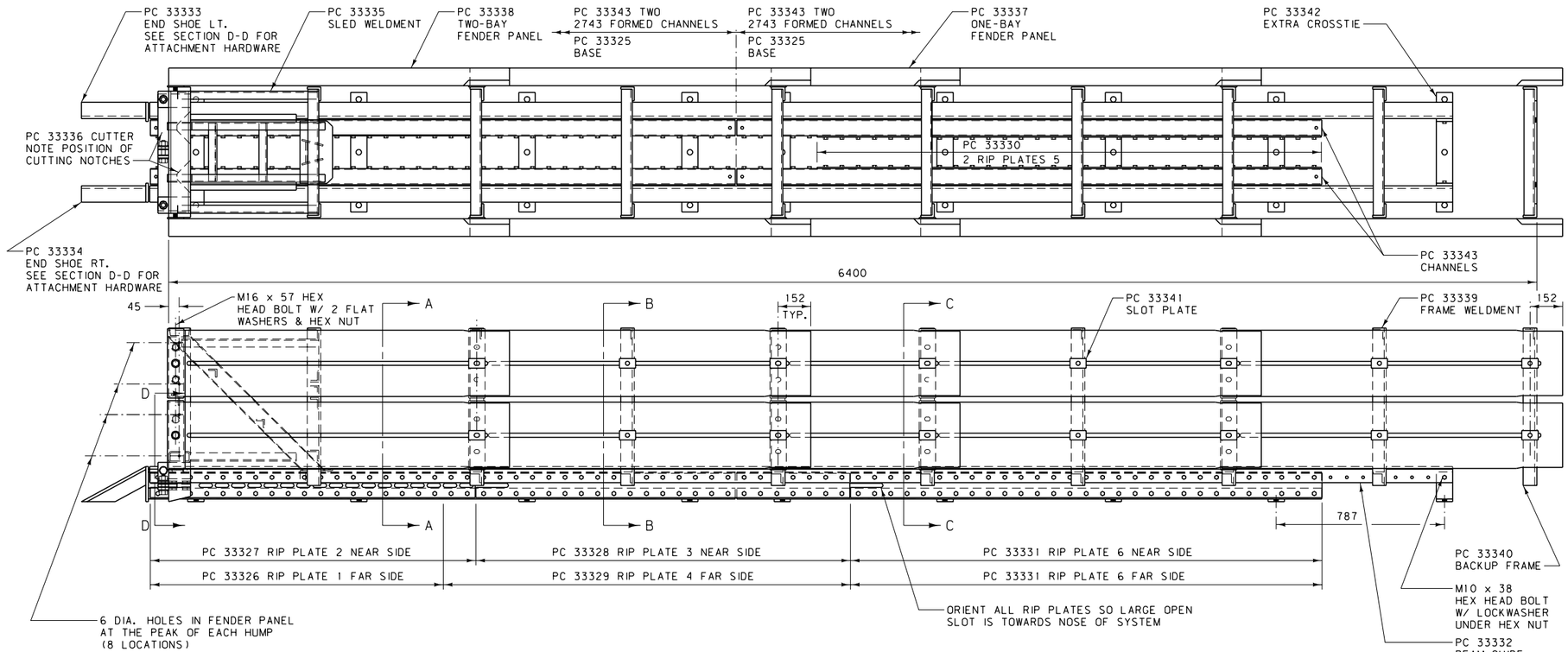

BILL OF MATERIAL		
PC	QTY	DESCRIPTION
33325A	2	BASE ASSEMBLY
33326G	1	1370 RIP PLATE 1
33327G	1	1525 RIP PLATE 2
33328G	1	1750 RIP PLATE 3
33329G	1	1905 RIP PLATE 4
33330G	2	2360 RIP PLATE 5
33331G	2	2210 RIP PLATE 6
33332G	2	6100 BEAM GUIDE
33333A	1	END SHOE (LEFT)
33334A	1	END SHOE (RIGHT)
33335A	1	SLED WELDMENT
33336A	1	CUTTER
33337A	4	ONE-BAY FENDER PANEL
33338A	16	TWO-BAY FENDER PANEL
33339A	7	FRAME WELDMENT
33340A	1	BACKUP FRAME WELDMENT
33341A	32	SLOT PLATE
33342A	1	EXTRA CROSSTIE
33343A	4	2745 FORMED CHANNEL
3340G	32	M16 HGR NUT
3361G	42	M16 HEX NUT
3391G	32	M16 x 44 HEX HEAD BOLT
3400G	16	M16 x 51 HGR BOLT
3435G	16	M16 x 89 HGR BOLT
3704G	9	M20 HEX NUT
3718G	9	M20 x 76 HEX HEAD BOLT
4258G	294	M10 LOCKWASHER
4261G	6	M10 x 38 HEX HEAD BOLT
4372G	84	M16 FLAT WASHER
5306G	10	M16 x 57 HEX HEAD BOLT
6322G	140	M10 x 102 HEX HEAD BOLT
6323G	148	M10 x 114 HEX HEAD BOLT
6405G	294	M10 HEAVY HEX NUT

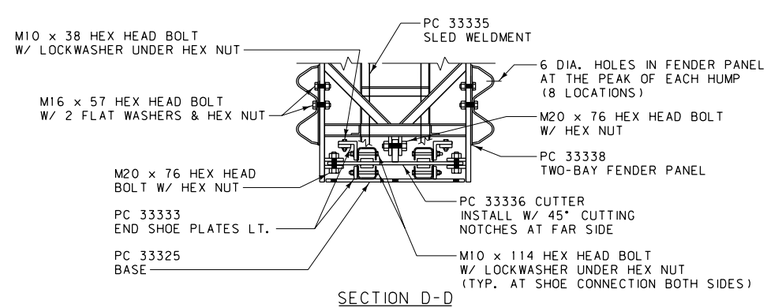

SECTION D-D

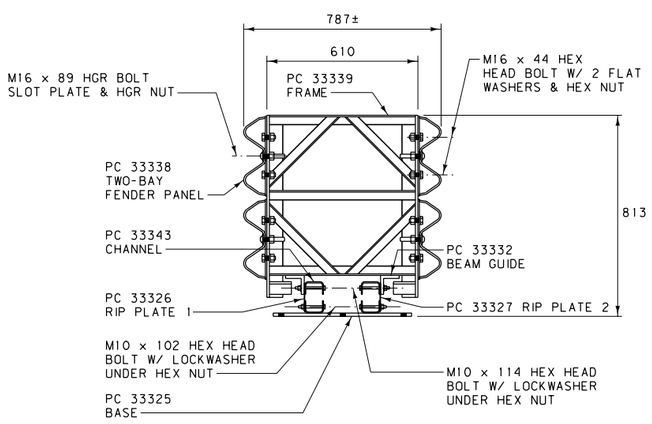

SECTION A-A

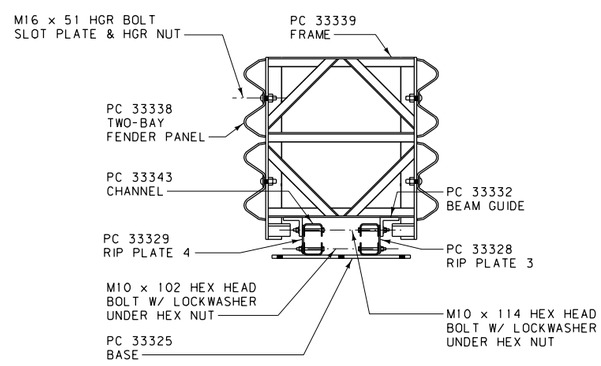

SECTION B-B

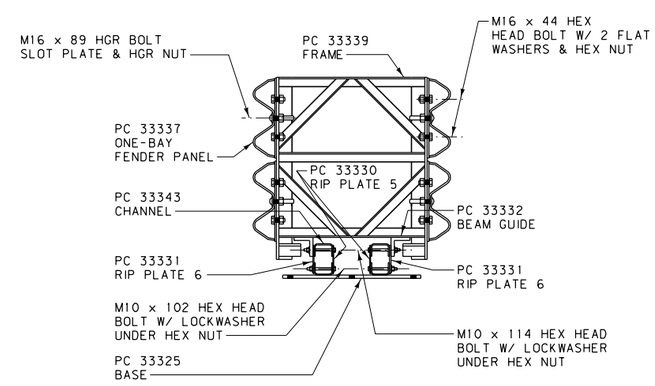

SECTION C-C

ALL DIMENSIONS ARE MILLIMETERS (mm) UNLESS OTHERWISE NOTED.

DETAILED DRAWING

REFERENCE STANDARD SPEC. SECTION 606 — DWG. NO. 606-31B

IMPACT ATTENUATOR - TRACC ASSEMBLY DETAILS

EFFECTIVE: FEBRUARY 2005

MDT serving you with pride — MONTANA DEPARTMENT OF TRANSPORTATION

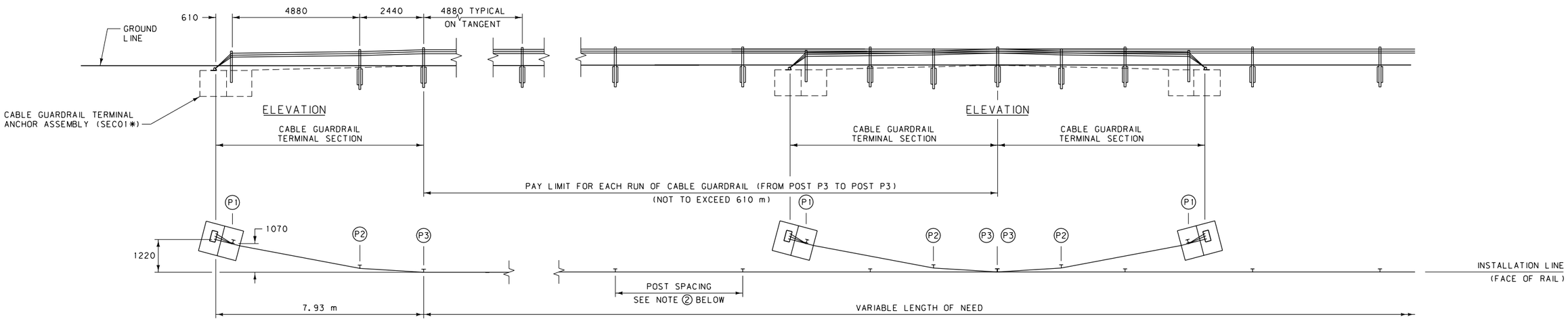

PLAN

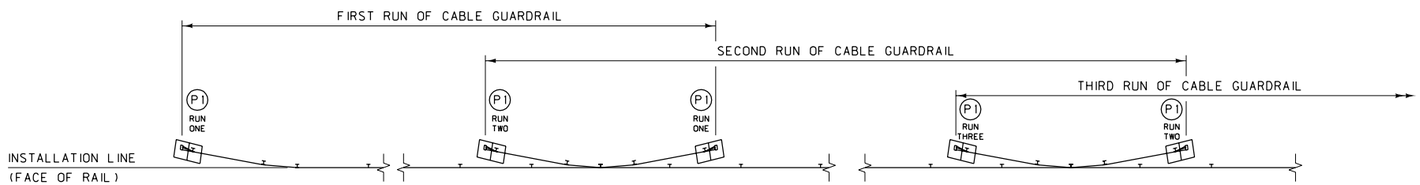

TYPICAL LAYOUT FOR MULTIPLE RUNS OF CABLE GUARDRAIL

EACH RUN OF CABLE GUARDRAIL CONTAINS TWO TERMINAL SECTIONS WITH ANCHOR ASSEMBLIES.

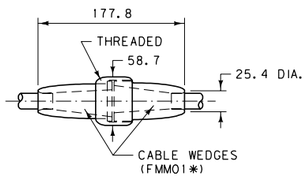

CABLE SPLICE

SPLICE CABLE USING A COUPLING DEVICE AS SHOWN, OR AN ALTERNATE METHOD APPROVED BY THE ENGINEEER.

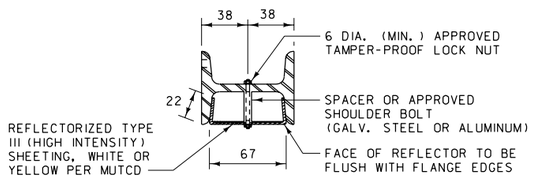

REFLECTOR ALT. "B"

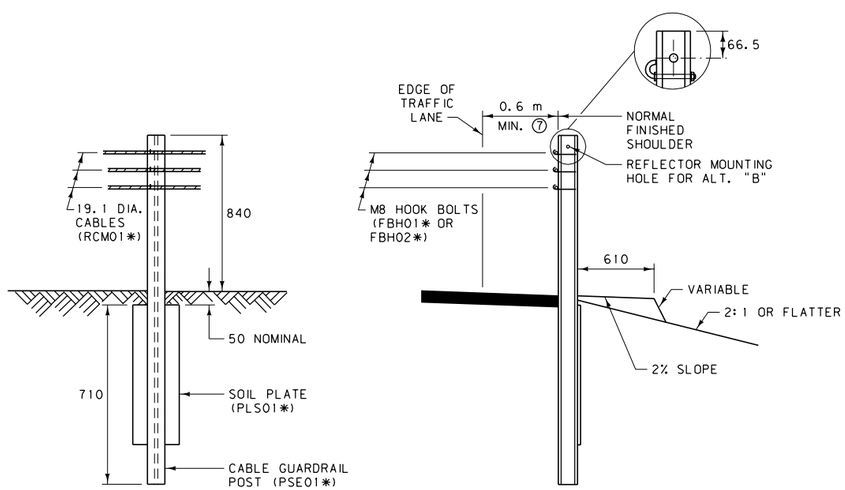

TYPICAL INSTALLATION DETAIL

LINE POST & POST P3

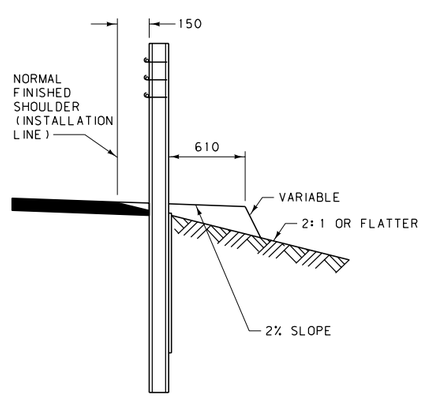

TYPICAL INSTALLATION DETAIL

POST P2

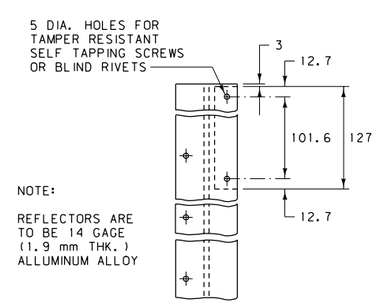

NOTE:

REFLECTORS ARE TO BE 14 GAGE (1.9 mm THK.) ALLUMINUM ALLOY

REFLECTOR ALT. "A"

NOTES:

① FOR CABLE GUARDRAIL RUNS OF:

318.42 m OR LESS: USE COMPENSATING CABLE END ASSEMBLY (RCE01✱) ON ONE END AND TURNBUCKLE CABLE END ASSEMBLY ✱ ON THE OTHER END OF EACH CABLE.

GREATER THAN 318.42 m, UP TO 625.86 m MAXIMUM: USE COMPENSATING CABLE END ASSEMBLY (RCE01✱) ON BOTH ENDS OF EACH CABLE.

② LINE POST SPACING:

TANGENTS AND CURVES WITH RADII 220 m AND GREATER: 4880 mm.

CURVES WITH RADII LESS THAN 220 m DOWN TO 135 m: 3660 mm.

NOTE: DO NOT INSTALL CABLE GUARDRAIL ON THE INSIDE SHOULDER OF ANY CURVE.

③ UNIFORMLY TENSION ALL CABLES TO COMPRESS SPRINGS BY 90 mm.

④ DO NOT INSTALL CABLE GUARDRAIL FOR OBSTACLES WITHIN 3.7 m OF THE INSTALLATION LINE.

⑤ DO NOT USE CABLE GUARDRAIL WITH FILL SLOPES STEEPER THAN 2:1, UNLESS THE DISTANCE BETWEEN THE BACK OF THE POSTS AND THE BREAK IN THE FILL SLOPE IS AT LEAST 2.5 m.

⑥ ATTACH REFLECTORS TO EVERY OTHER LINE POST (9.76 m TYP.), BEGINNING AT POST P3. DO NOT ATTACH REFLECTORS TO POSTS P1 AND P2.

⑦ WIDENING IS REQUIRED IF FINISHED SHOULDER IS LESS THAN 0.6 m FROM THE TRAFFIC LANE.

✱ SEE DTL. DWG. NO. 606-80 FOR SCHEDULE OF GUARDRAIL HARDWARE.

ALL DIMENSIONS ARE MILLIMETERS (mm) UNLESS OTHERWISE NOTED.

DETAILED DRAWING	
REFERENCE STANDARD SPEC. SECTION 606	DWG. NO. 606-40
CABLE GUARDRAIL	
EFFECTIVE: FEBRUARY 2005	
serving you with pride	MONTANA DEPARTMENT OF TRANSPORTATION

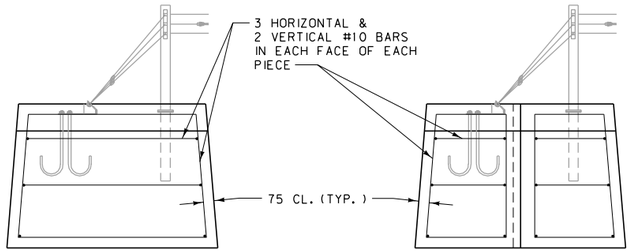

ONE PIECE

TWO PIECE

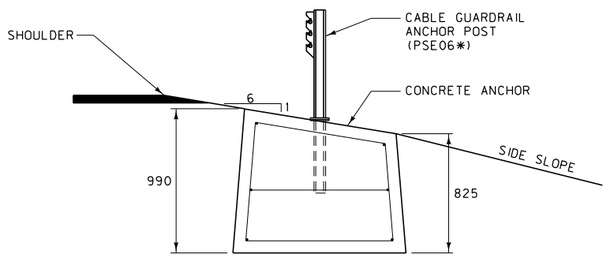

ANCHOR UNIT & RE-BAR INSTALLATION DETAILS

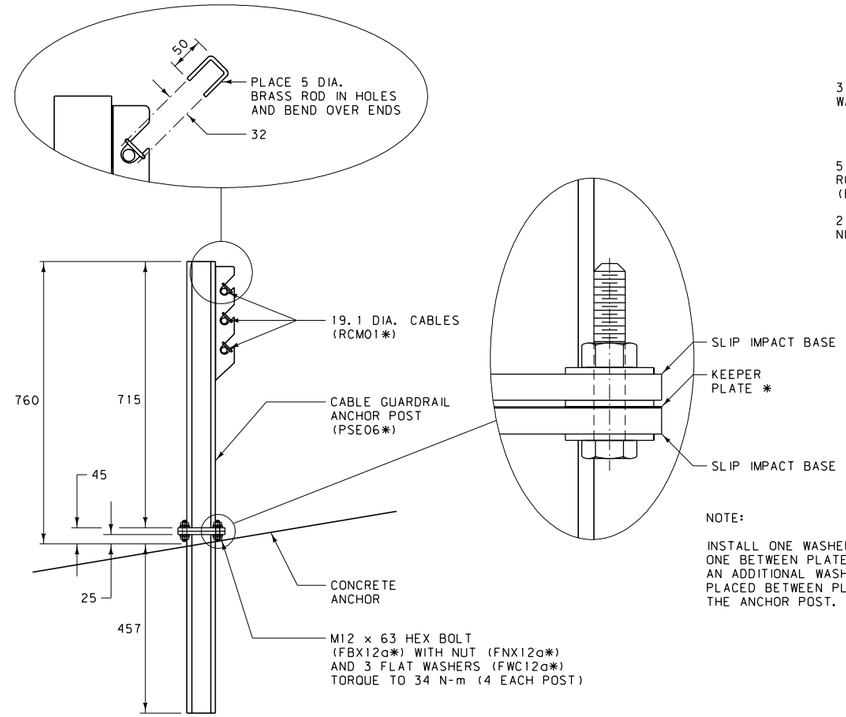

NOTE:

INSTALL ONE WASHER UNDER HEAD, ONE BETWEEN PLATES & ONE UNDER NUT. AN ADDITIONAL WASHER MAY BE PLACED BETWEEN PLATES TO PLUMB THE ANCHOR POST.

ANCHOR POST DETAIL

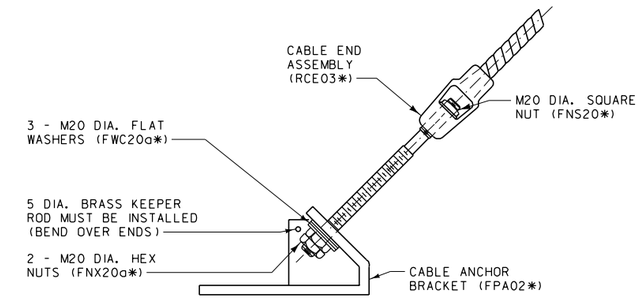

CABLE END ASSEMBLY TO ANCHOR BRACKET DETAIL

NOTES:

1. INSTALL THE CONCRETE ANCHOR INTO THE EXCAVATION, AS DETAILED, SO THAT THE BOTTOM OF THE ANCHOR HAS A FULL AND EVEN BEARING ON THE SURFACE UNDER IT. BACKFILL AROUND THE CONCRETE ANCHOR IN ACCORDANCE WITH SECTION 203.03.3 OF THE STANDARD SPECIFICATIONS.

2. THE CONCRETE ANCHOR CAN BE PLACED AS ONE OR TWO PIECES. THIS DETAIL PRIMARILY SHOWS A TWO PIECE INSTALLATION. FOR ONE PIECE INSTALLATIONS, USE ALL THE SAME DIMENSIONS, LESS THE TAPERED KEYWAY AND THE ADDITIONAL REBAR, AS SHOWN.

3. IF LIFTING DEVICES ARE EMBEDDED INTO THE CONCRETE ANCHORS, INSURE THAT THEY HAVE A SAFE WORKING LOAD OF 3.6 METRIC TONS FOR THE ONE PIECE ANCHOR AND 1.8 METRIC TONS EACH FOR EACH OF THE HALVES OF THE TWO PIECE ANCHOR UNIT.

4. USE CLASS "DD" CONCRETE TO CONSRUCT ANCHOR.

* SEE DTL. DWG. NO. 606-80 FOR SCHEDULE OF GUARDRAIL HARDWARE.

TAPERED KEYWAY DETAIL
(TWO PIECE INSTALLATION)

NOTE:

DIMENSIONS FOR LEFT AND RIGHT HAND ANCHOR UNITS ARE THE SAME, WITH THE POSITION OF THE ANCHOR POST AND ANCHOR BRACKET BEING THE ONLY DIFFERENCE.

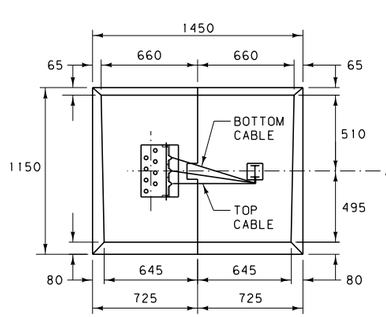

PLAN
(LEFT HAND ANCHOR UNIT)

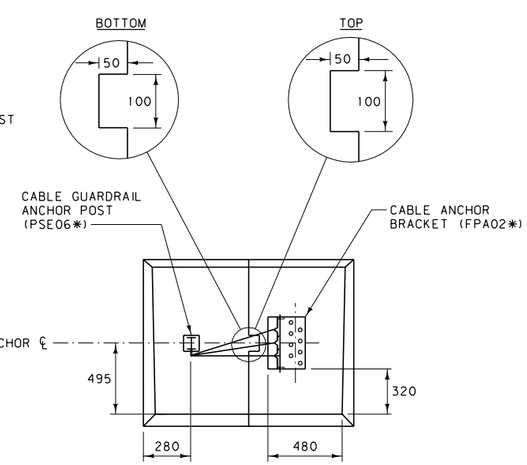

PLAN
(RIGHT HAND ANCHOR UNIT)

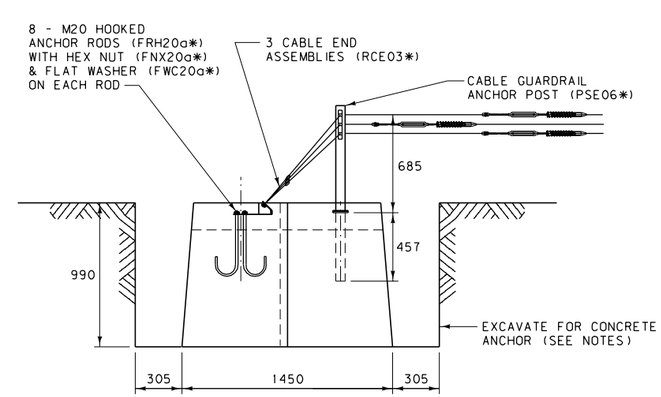

ELEVATION
(LEFT HAND ANCHOR UNIT)

ALL DIMENSIONS ARE MILLIMETERS (mm) UNLESS OTHERWISE NOTED.

DETAILED DRAWING	
REFERENCE STANDARD SPEC. SECTION 606	DWG. NO. 606-41
CABLE GUARDRAIL TERMINAL ANCHOR ASSEMBLY	
EFFECTIVE: FEBRUARY 2005	
serving you with pride	MONTANA DEPARTMENT OF TRANSPORTATION

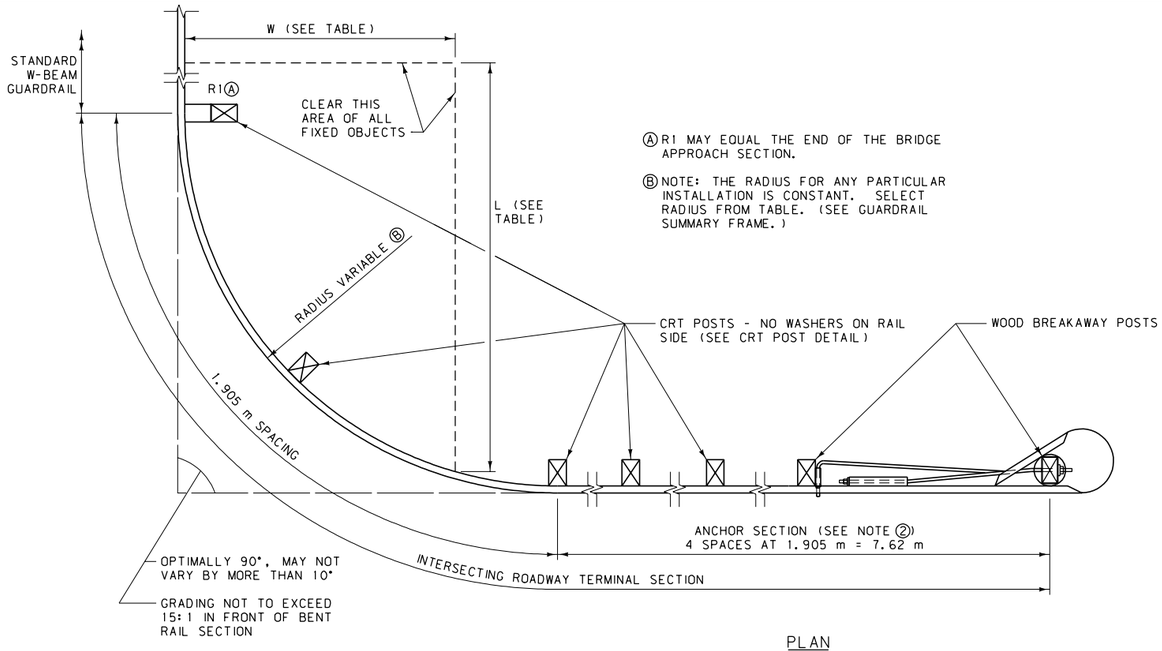

Ⓐ R1 MAY EQUAL THE END OF THE BRIDGE APPROACH SECTION.

Ⓑ NOTE: THE RADIUS FOR ANY PARTICULAR INSTALLATION IS CONSTANT. SELECT RADIUS FROM TABLE. (SEE GUARDRAIL SUMMARY FRAME.)

PLAN

RADIUS TABLE			
RADIUS	LENGTH OF BENT RAIL	L	W
2450	3.81 m	7.6 m	4.6 m
4850	7.62 m	9.1 m	4.6 m
7300	11.43 m	12.2 m	6.1 m
9700	15.24 m	15.2 m	6.1 m

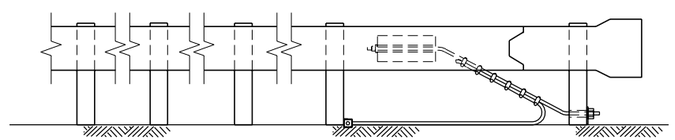

ELEVATION

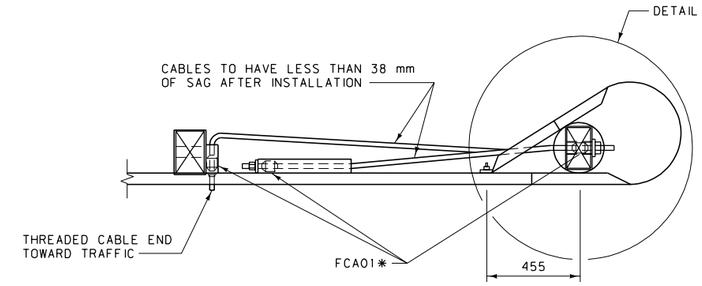

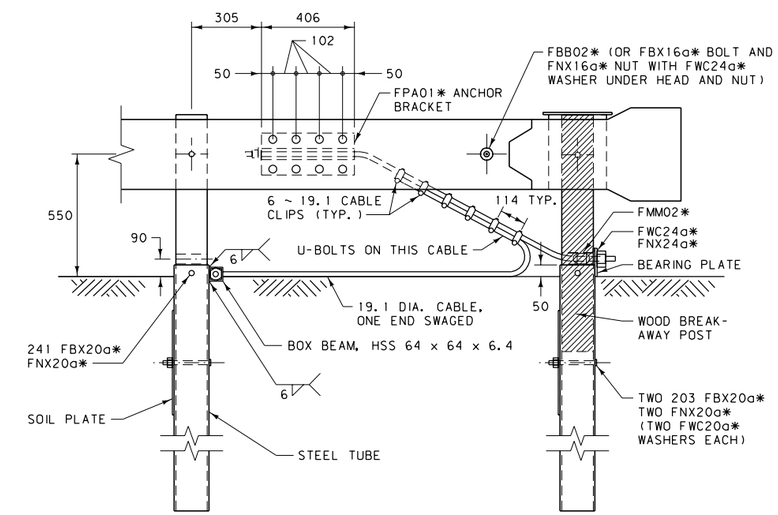

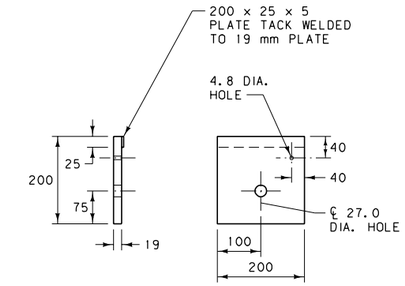

BEARING PLATE DETAIL

FPB01✱

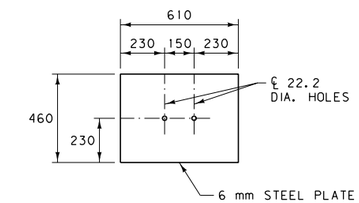

SOIL PLATE DETAIL

PLS03✱

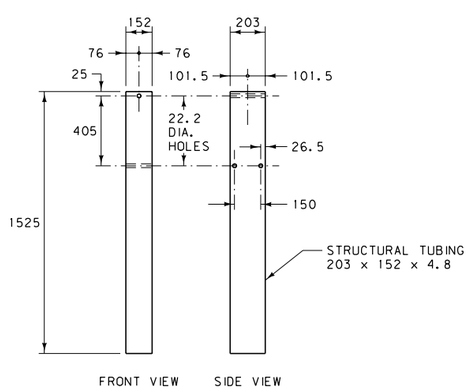

STEEL TUBE DETAILS

PTE05✱

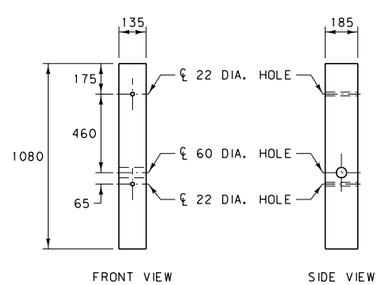

WOOD BREAKAWAY POST DETAILS

PDF01✱

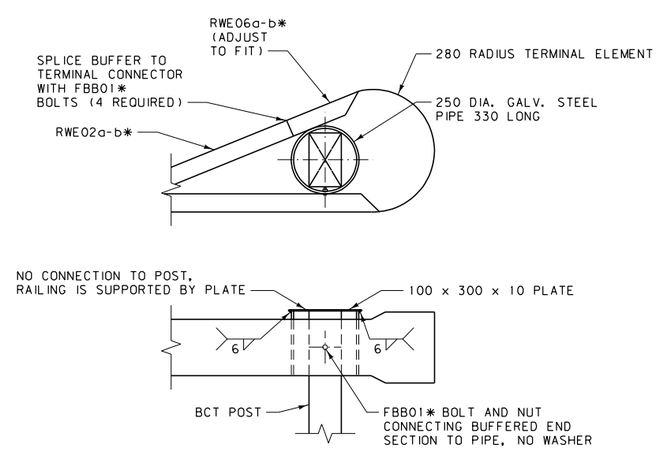

DETAIL A

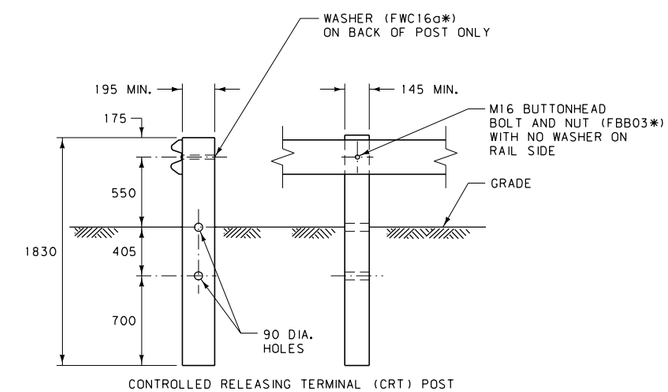

CRT POST DETAIL

PDE09✱

NOTES:

① DO NOT INSTALL ON SLOPES STEEPER THAN 2:1.

② DO NOT OMIT OR SHORTEN ANCHOR SECTION.

③ SEE DTL. DWG. NO. 606-05A FOR GUARDRAIL WIDENING REQUIREMENTS.

✱ SEE DTL. DWG. NO. 606-80 FOR SCHEDULE OF GUARDRAIL HARDWARE.

ALL DIMENSIONS ARE MILLIMETERS (mm) UNLESS OTHERWISE NOTED.

DETAILED DRAWING	
REFERENCE STANDARD SPEC. SECTION 606	DWG. NO. 606-46
INTERSECTING ROADWAY TERMINAL SECTION	
EFFECTIVE: FEBRUARY 2005	
serving you with pride	MONTANA DEPARTMENT OF TRANSPORTATION

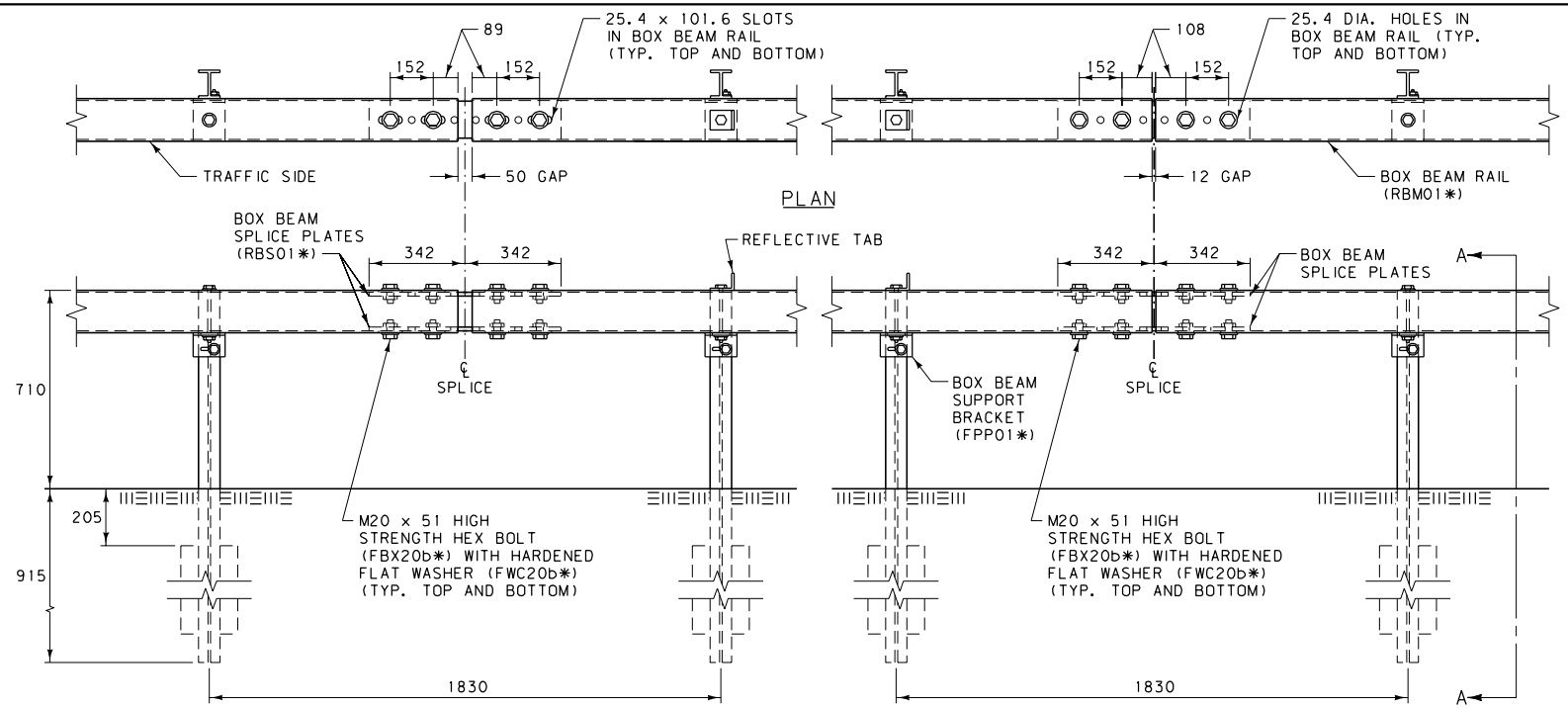

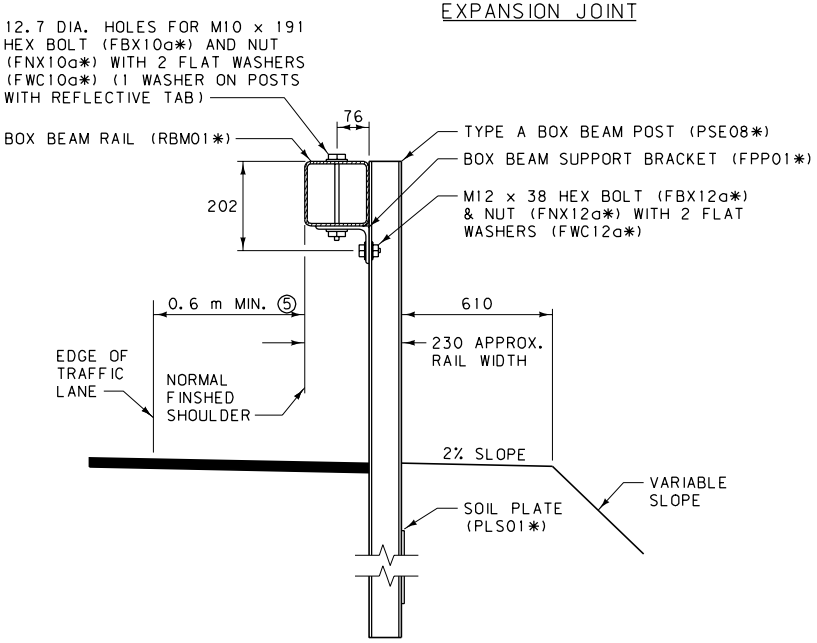

NOTES:

① USE BOX BEAM RAIL IN MINIMUM NOMINAL LENGTHS OF 5.49 m UNLESS APPROVED BY THE ENGINEER.

② INSTALL EXPANSION JOINTS ON ALL BOX BEAM GUARDRAIL INSTALLATIONS GREATER THAN 90 m IN LENGTH AT INTERVALS NOT TO EXCEED 150 m.

③ ATTACH REFLECTIVE TABS TO EVERY FOURTH POST (7.32 m TYP.) ANGLE TABS SLIGHTLY TOWARDS TRAFFIC. DO NOT USE REFLECTIVE TABS ON WY-BET TERMINALS. WY-BET TERMINALS RECEIVE REFLECTIVE CHANNELS.

④ DO NOT INSTALL BOX BEAM GUARDRAIL FOR OBSTACLES WITHIN 1.52 m OF THE BACK OF THE RAIL.

⑤ WIDENING IS REQUIRED IF FINISHED SHOULDER IS LESS THAN 0.6 m FROM THE TRAFFIC LANE.

* SEE DTL. DWG. NO. 606-80 FOR SCHEDULE OF GUARDRAIL HARDWARE.

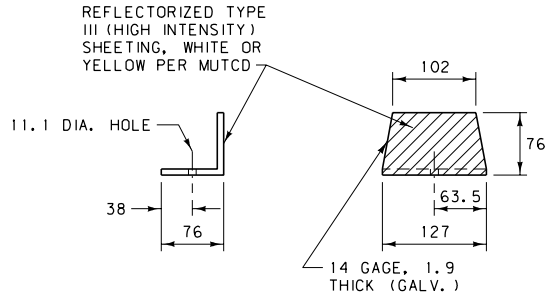

REFLECTIVE TAB

ALL DIMENSIONS ARE MILLIMETERS (mm) UNLESS OTHERWISE NOTED.

DETAILED DRAWING	
REFERENCE STANDARD SPEC. SECTION 606	DWG. NO. 606-50
BOX BEAM GUARDRAIL	
EFFECTIVE: FEBRUARY 2005	

MDT serving you with pride — MONTANA DEPARTMENT OF TRANSPORTATION

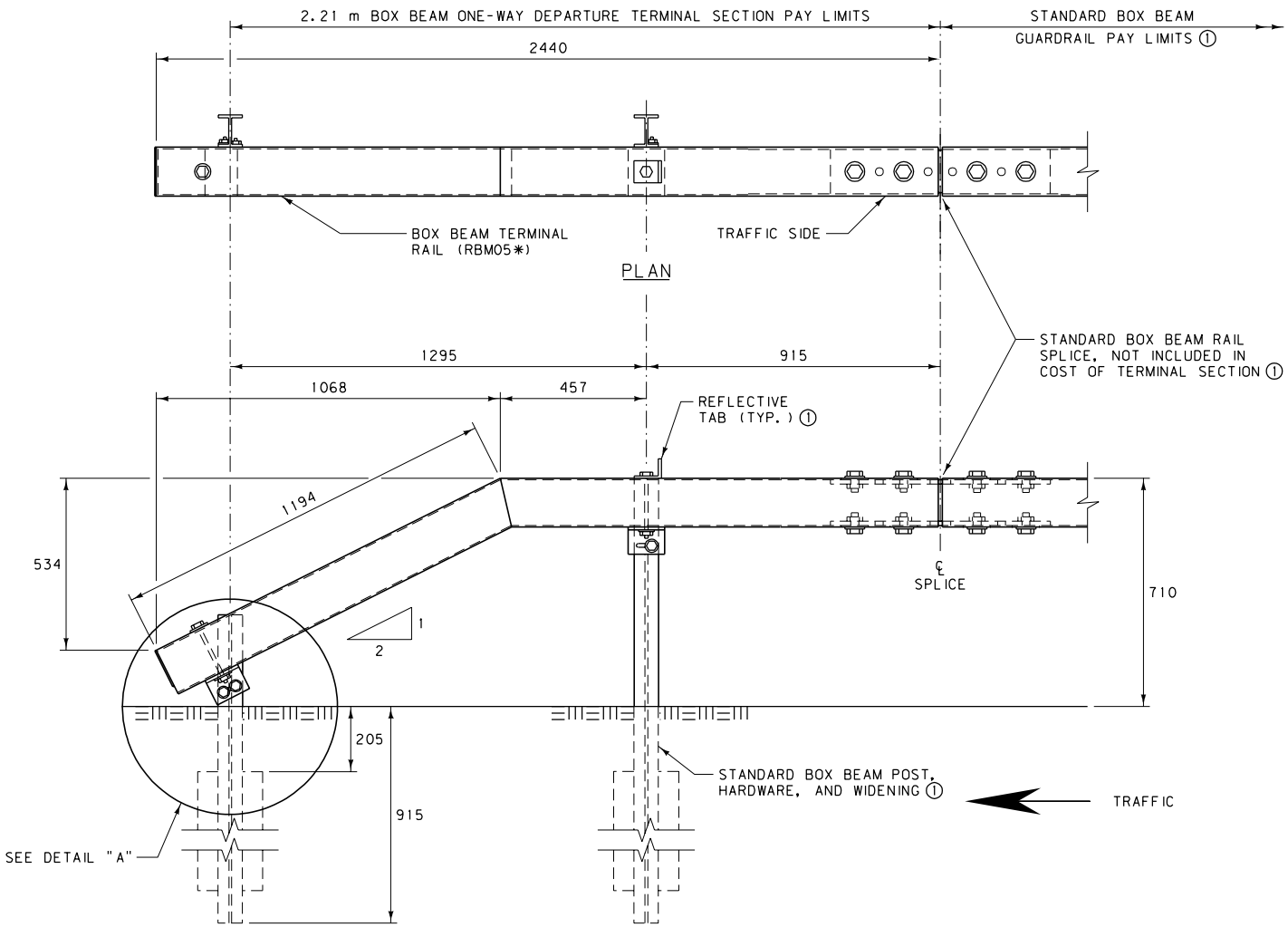

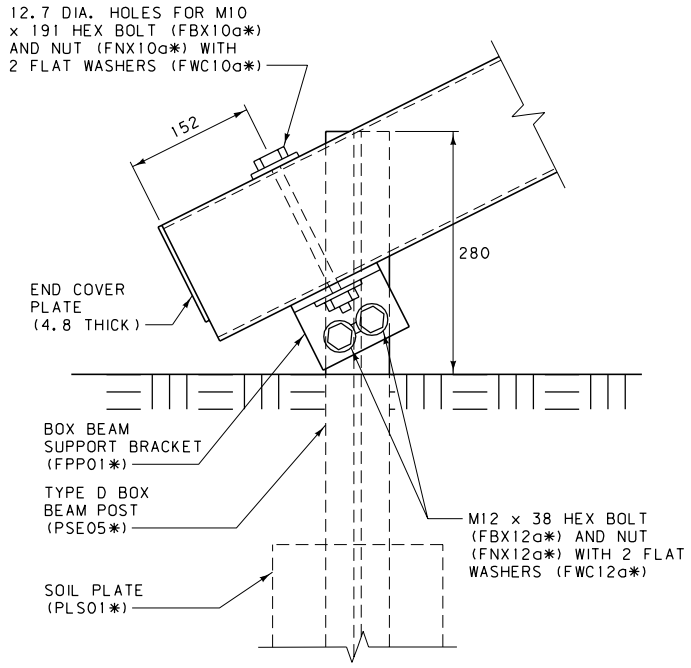

NOTES:

① SEE DTL. DWG. NO. 606-50 FOR STANDARD BOX BEAM GUARDRAIL AND ASSOCIATED DETAILS.

✱ SEE DTL. DWG. NO. 606-80 FOR SCHEDULE OF GUARDRAIL HARDWARE.

ALL DIMENSIONS ARE MILLIMETERS (mm) UNLESS OTHERWISE NOTED.

DETAILED DRAWING	
REFERENCE STANDARD SPEC. SECTION 606	DWG. NO. 606-52
BOX BEAM ONE-WAY DEPARTURE TERMINAL SECTION	
EFFECTIVE: FEBRUARY 2005	
serving you with pride	MONTANA DEPARTMENT OF TRANSPORTATION

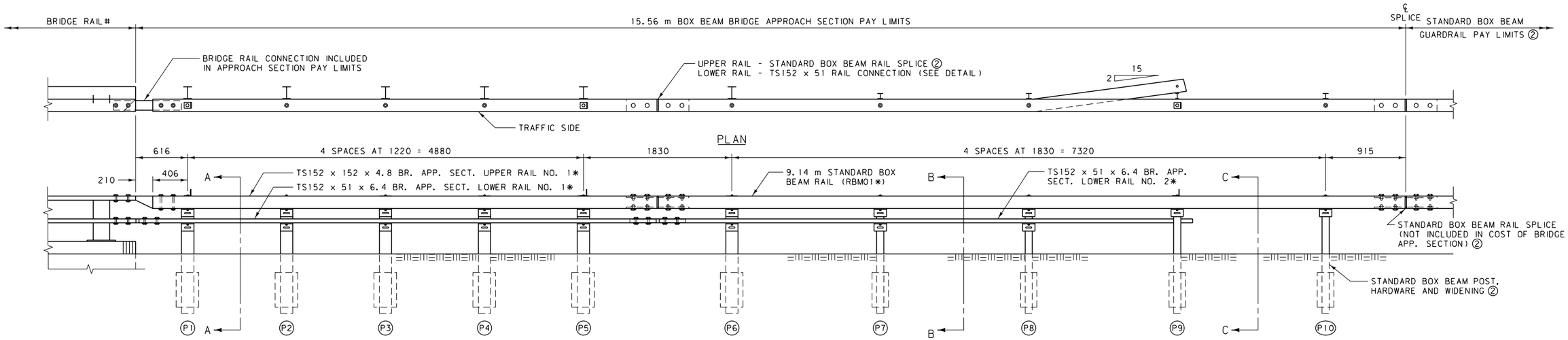

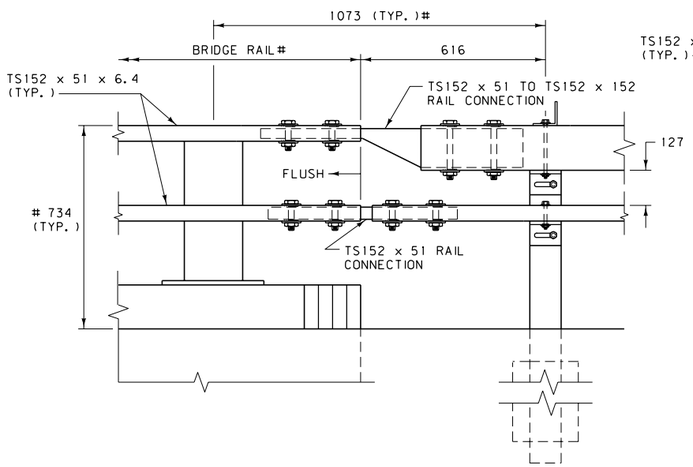

BOX BEAM - BRIDGE APPROACH SECTION TYPE 1

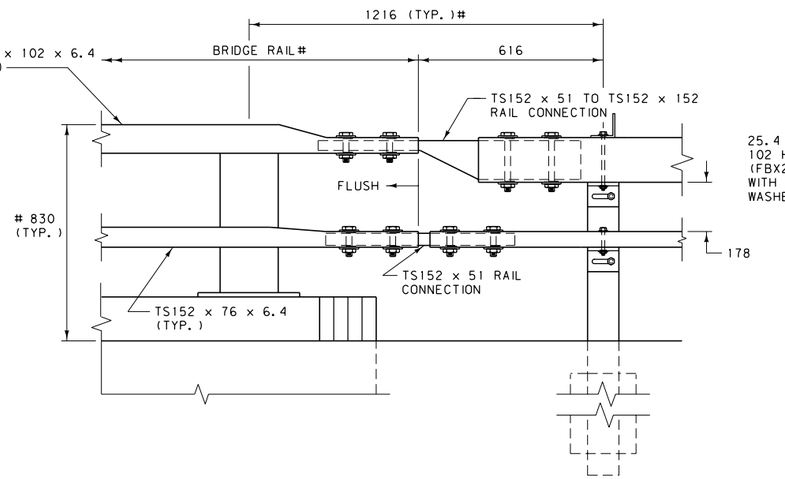

BOX BEAM - BRIDGE APPROACH SECTION TYPE 2

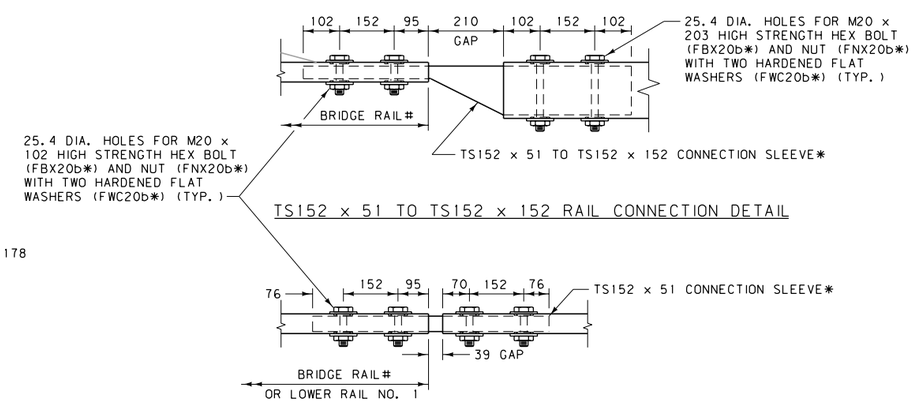

NOTES:

① WIDENING IS REQUIRED IF FINISHED SHOULDER IS LESS THAN 0.6 m FROM THE TRAFFIC LANE.

② SEE DTL. DWG. NO. 606-50 FOR STANDARD BOX BEAM GUARDRAIL AND ASSOCIATED DETAILS.

* SEE DTL. DWG. NO. 606-80 FOR SCHEDULE OF GURADRAIL HARDWARE.

SEE BRIDGE PLANS.

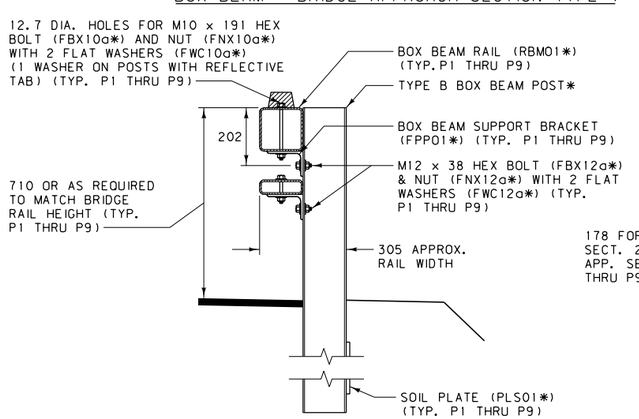

SECTION A-A
(TYP. AT POSTS P1 THRU P6)

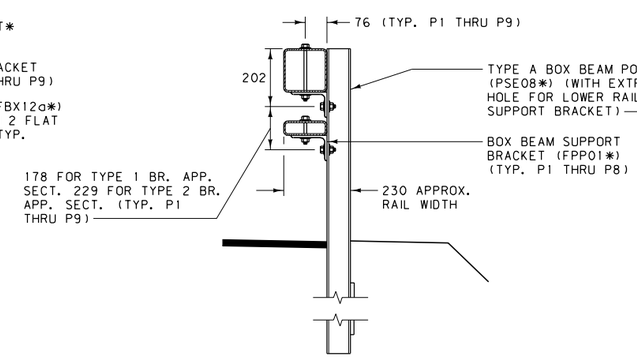

SECTION B-B
(TYP. AT POSTS P7 & P8)

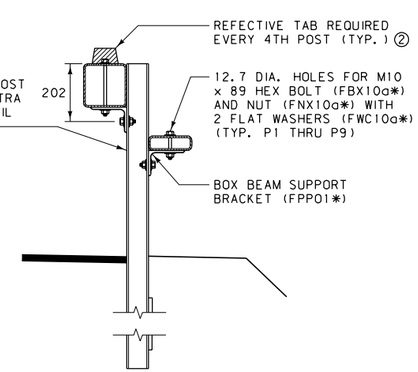

SECTION C-C
(POST P9)

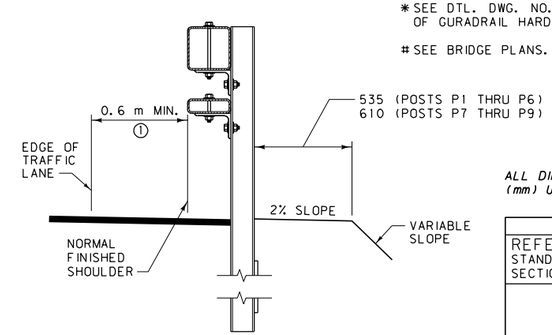

GUARDRAIL WIDENING DETAIL
(TYP AT POST P1 THRU P9)

ALL DIMENSIONS ARE MILLIMETERS (mm) UNLESS OTHERWISE NOTED.

DETAILED DRAWING	
REFERENCE STANDARD SPEC. SECTION 606	DWG. NO. 606-53
BOX BEAM BRIDGE APPROACH SECTIONS	
EFFECTIVE: FEBRUARY 2005	
serving you with pride	MONTANA DEPARTMENT OF TRANSPORTATION

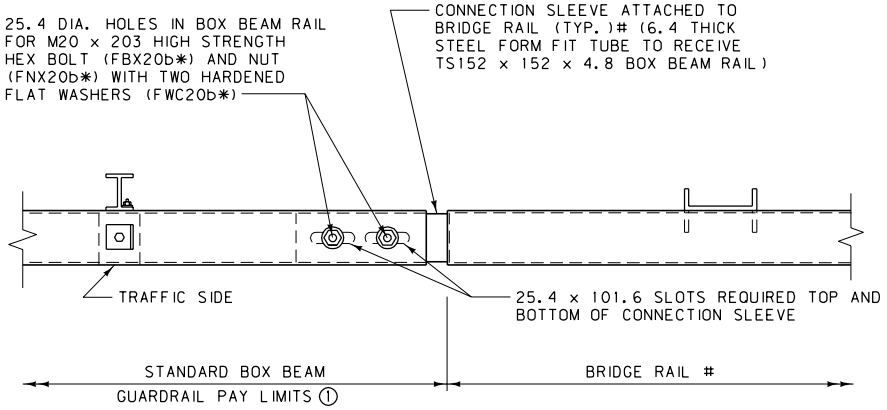

PLAN

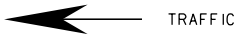

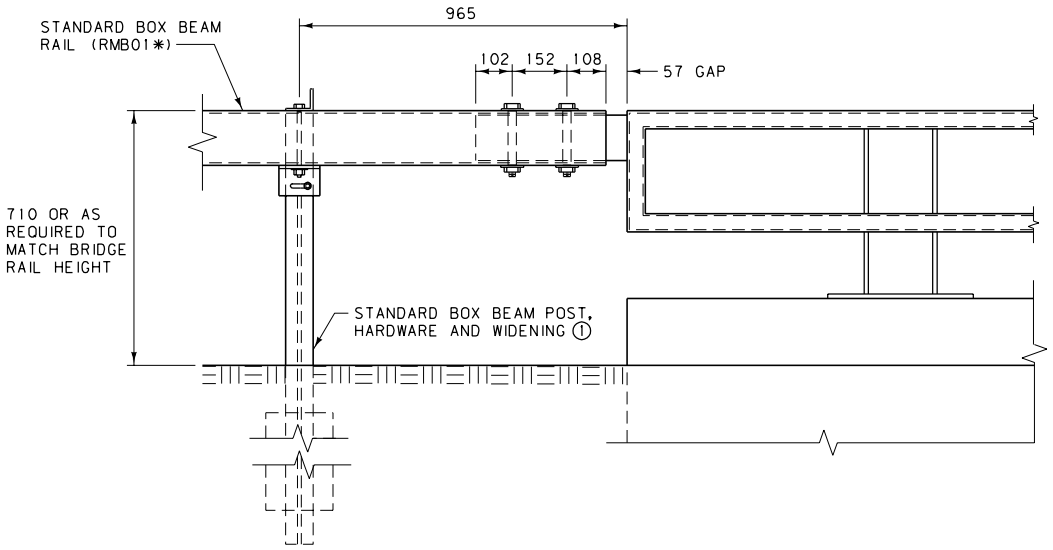

ELEVATION

NOTES:

1. SEE DTL. DWG. NO. 606-50 FOR STANDARD BOX BEAM GUARDRAIL AND ASSOCIATED DETAILS.
2. USE ON EXIT END OF ONE-WAY TRAFFIC BRIDGES ONLY.

* SEE DTL. DWG. NO. 606-80 FOR SCHEDULE OF GUARDRAIL HARDWARE.

\# SEE BRIDGE PLANS FOR MORE DETAILED INFORMATION ON BRIDGE RAIL AND CONNECTION DETAILS.

ALL DIMENSIONS ARE MILLIMETERS (mm) UNLESS OTHERWISE NOTED.

DETAILED DRAWING	
REFERENCE STANDARD SPEC. SECTION 606	DWG. NO. 606-54
BOX BEAM ONE-WAY BRIDGE DEPARTURE SECTION	
EFFECTIVE: FEBRUARY 2005	
serving you with pride	MONTANA DEPARTMENT OF TRANSPORTATION

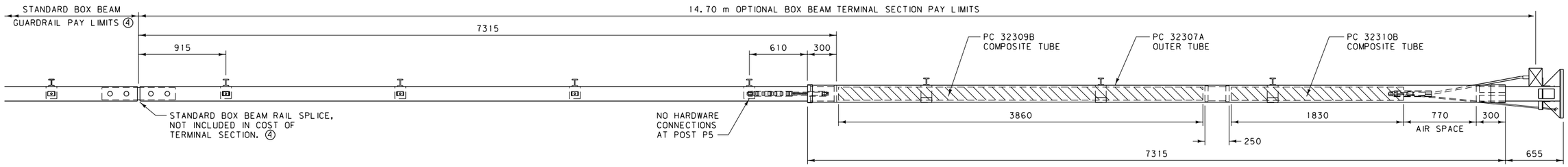

PLAN

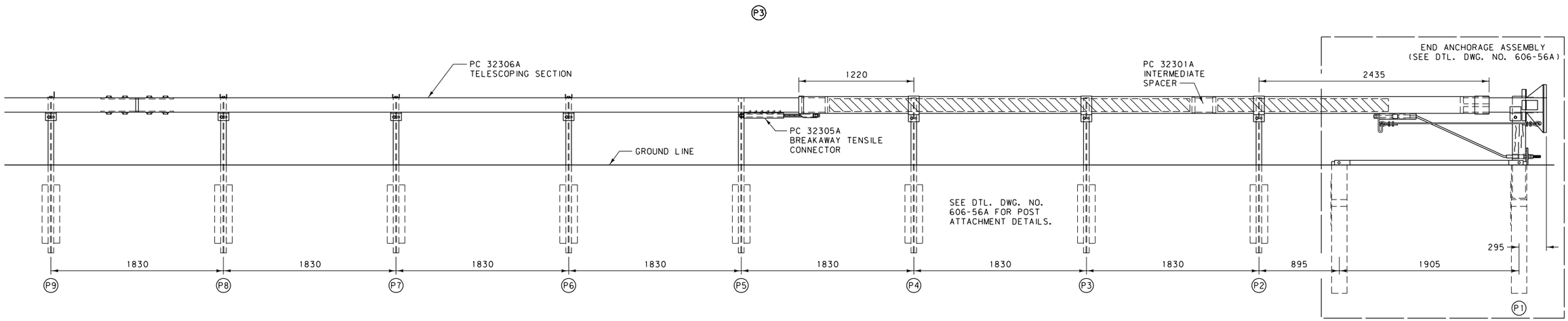

ELEVATION

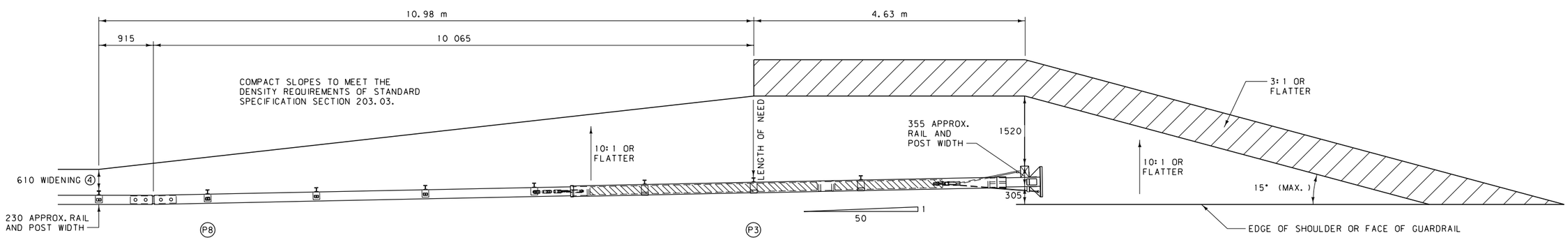

TRAFFIC

NOTES:

① PLACE A SELF-ADHESIVE OBJECT MARKER ON THE FACE OF THE NOSE ASSEMBLY, HAVING ALTERNATING RETRO-REFLECTIVE BLACK AND YELLOW STRIPES SLOPED DOWNWARD AT AN ANGLE OF 45° TOWARDS THE SIDE ON WHICH TRAFFIC IS TO PASS.

② FLARE THE END SECTION AWAY FROM TRAFFIC AT A RATE OF 50:1 FOR 15.24 m (ILLUSTRATED). FLARES OF 50:1 FOR 30.48 m MAY ALSO BE USED. THE FLARE MAY BE OMITTED ON ROADS WITH SHOULDERS GREATER THAN 0.6 m IN WIDTH.

③ OBTAIN ENGINEERS APPROVAL OF MANUFACTURER INSTALLATION OPTIONS WHEN SITE CONDITIONS PREVENT THE USE OF THE OPTION SHOWN ON THIS DETAIL.

④ SEE DTL. DWG. NO. 606-50 FOR STANDARD BOX BEAM GUARDRAIL AND ASSOCIATED DETAILS.

GUARDRAIL WIDENING

ALL DIMENSIONS ARE MILLIMETERS (mm) UNLESS OTHERWISE NOTED.

DETAILED DRAWING	
REFERENCE STANDARD SPEC. SECTION 606	DWG. NO. 606-55A
OPTIONAL BOX BEAM TERMINAL SECTION - WY-BET	
EFFECTIVE: FEBRUARY 2005	
serving you with pride	MONTANA DEPARTMENT OF TRANSPORTATION

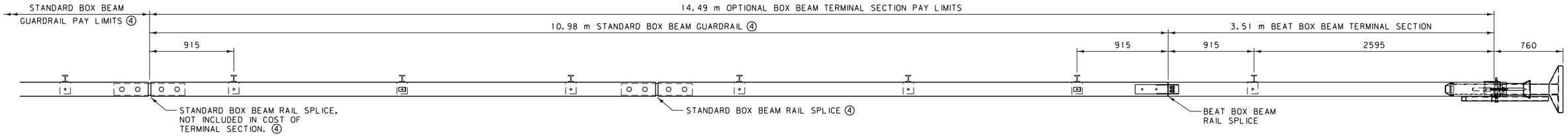

PLAN

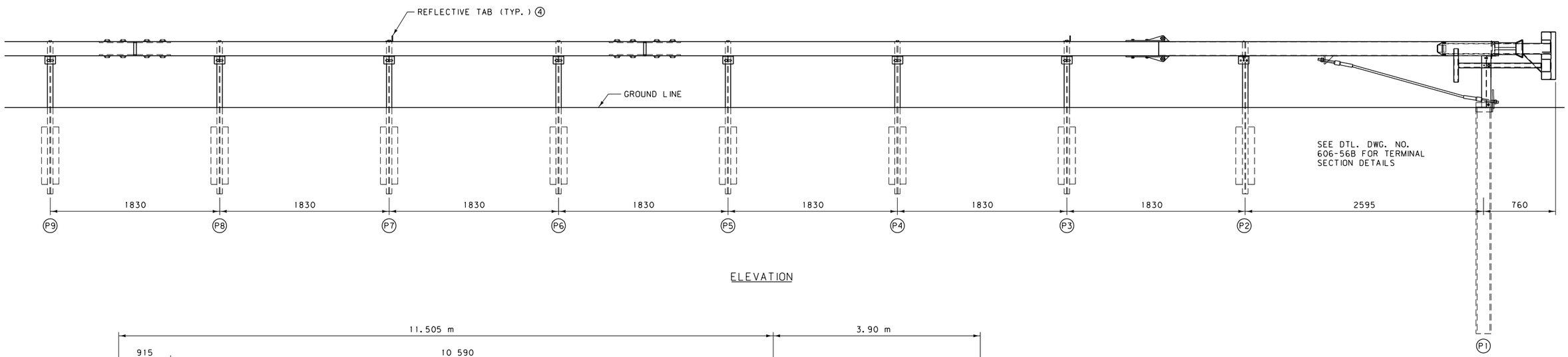

ELEVATION

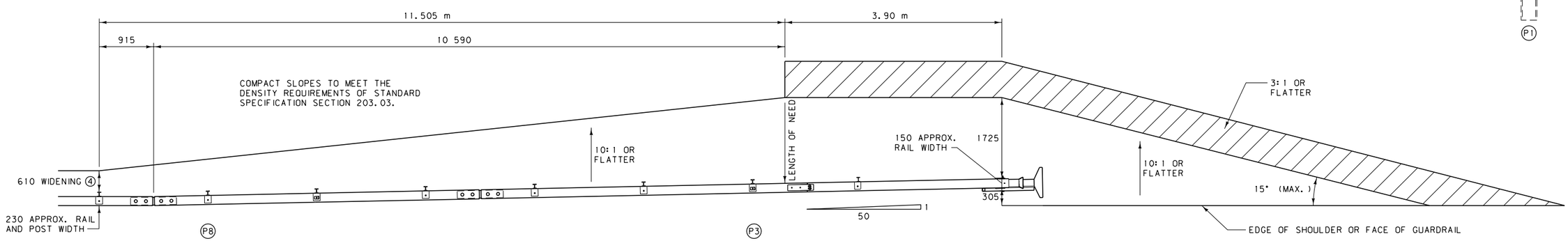

NOTES:

① PLACE A SELF-ADHESIVE OBJECT MARKER ON THE FACE OF THE NOSE ASSEMBLY, HAVING ALTERNATING RETRO-REFLECTIVE BLACK AND YELLOW STRIPES SLOPED DOWNWARD AT AN ANGLE OF 45° TOWARDS THE SIDE ON WHICH TRAFFIC IS TO PASS.

② FLARE THE END SECTION AWAY FROM TRAFFIC AT A RATE OF 50:1 FOR 15.24 m (ILLUSTRATED). FLARES OF 50:1 FOR 30.48 m MAY ALSO BE USED. THE FLARE MAY BE OMITTED ON ROADS WITH SHOULDERS GREATER THAN 0.6 m IN WIDTH.

③ OBTAIN ENGINEERS APPROVAL OF MANUFACTURER INSTALLATION OPTIONS WHEN SITE CONDITIONS PREVENT THE USE OF THE OPTION SHOWN ON THIS DETAIL.

④ SEE DTL. DWG. NO. 606-50 FOR STANDARD BOX BEAM GUARDRAIL AND ASSOCIATED DETAILS.

GUARDRAIL WIDENING

ALL DIMENSIONS ARE MILLIMETERS (mm) UNLESS OTHERWISE NOTED.

DETAILED DRAWING	
REFERENCE STANDARD SPEC. SECTION 606	DWG. NO. 606-55B
OPTIONAL BOX BEAM TERMINAL SECTION - BEAT	
EFFECTIVE: FEBRUARY 2005	
serving you with pride	MONTANA DEPARTMENT OF TRANSPORTATION

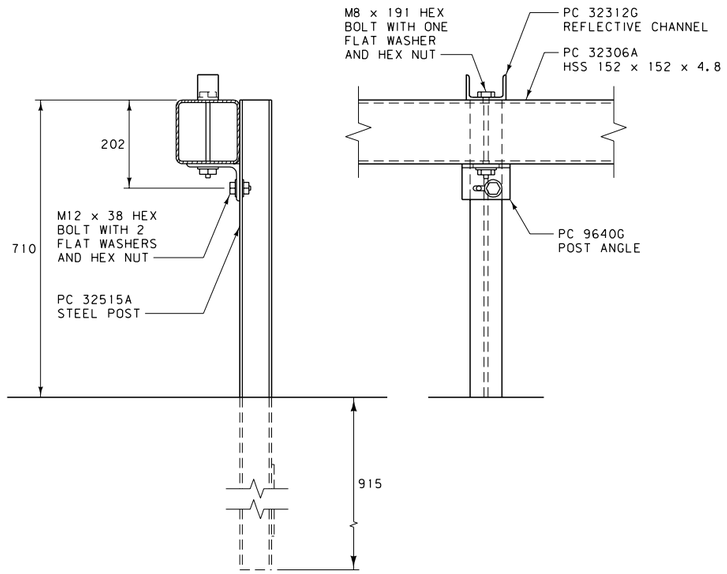

POST ATTACHMENT DETAIL
(TYP. AT POSTS P6, P7 AND P8)

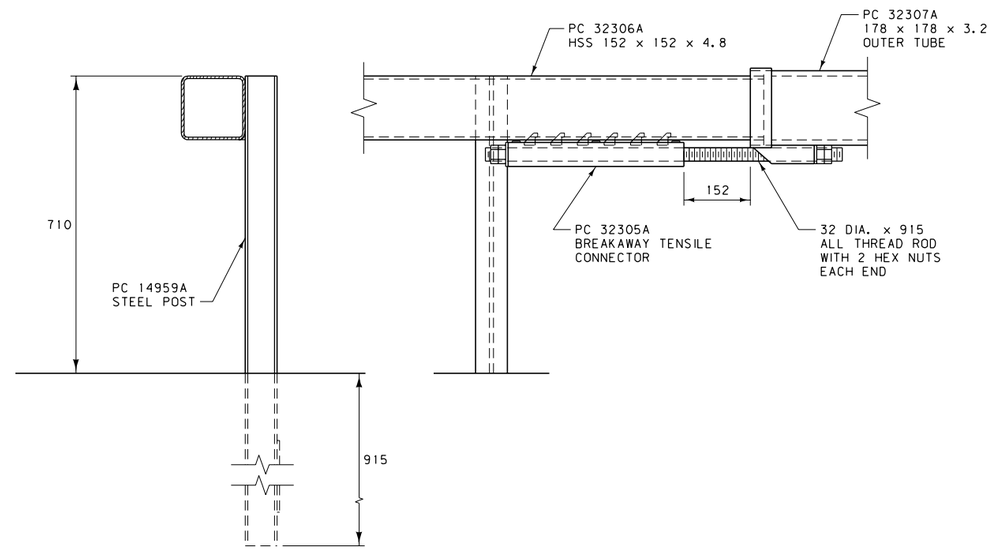

POST ATTACHMENT DETAIL
(POST P5)

BILL OF MATERIAL		
PC	QTY	DESCRIPTION
706G	1	PIPE SLEEVE, 50 DIA. x 150
721G	1	PLATE WASHER, 75 x 100 x 10
722G	1	NOSE RESTRAINT CABLE BRACKET
736G	2	STEEL TUBE, 152 x 203 x 1525
766G	2	SOIL PLATE, 460 x 610 x 6
774A	1	SLOTTED BEARING PLATE
3000G	1	CABLE ASSEMBLY
3148G	2	6 DIA. x 51 LAG SCREW
3240G	3	M8 ROUND WASHER
3245G	3	M8 HEX NUT
3254G	3	10 DIA. x 38 LAG SCREW
3255G	5	M10 ROUND WASHER
3264G	2	10 DIA. x 127 LAG SCREW
3350G	4	M16 HEX NUT
3478G	4	M16 x 191 HEX BOLT
3700G	4	M20 ROUND WASHER
3710G	2	M20 HEX NUT
4044G	4	32 DIA. HEX NUT
4066B	1	WOOD POST, 150 x 200 x 1080
4106B	3	RUBBER PAD, 38.1 x 88.9 x 101.6
4192G	4	6.4 mm CABLE CLAMP
4300G	18	M12 ROUND WASHER
4303G	9	M12 HEX NUT
4308G	9	M12 x 38 HEX BOLT
4719G	2	M20 x 254 HEX BOLT
4902G	2	M24 ROUND WASHER
4903G	4	M24 HEX NUT
5044G	1	AIRCRAFT CABLE, 6.4 DIA. x 2080
5092G	2	6.4 mm AIRCRAFT CABLE THIMBLE
5188G	3	M8 x 191 HEX BOLT
5423G	1	32 DIA. x 915 ALL THREAD ROD
9640G	3	POST ANGLE, 127 x 89 x 9.5 x 115
9641G	3	SHELF ANGLE, 115 x 3.2 x 486
9642G	1	SHELF ANGLE, 115 x 3.2 x 283
9852A	1	STRUT AND YOKE ASSEMBLY
14959A	1	1625 mm STEEL POST
32300A	1	WY-BET NOSE ASSEMBLY
32301A	1	HSS 152 x 152 x 250 INTERMEDIATE SPACER
32305A	1	BREAKAWAY TENSILE CONNECTOR
32306A	1	HSS 152 x 152 x 4.8 TELESCOPING SECTION
32307A	1	OUTER TUBE
32309B	1	152.4 O.D. x 6.4 x 3860 COMPOSITE TUBE
32310B	1	152.4 O.D. x 3.2 x 1830 COMPOSITE TUBE
32312G	3	REFLECTOR CHANNEL
32515A	6	1625 mm STEEL POST

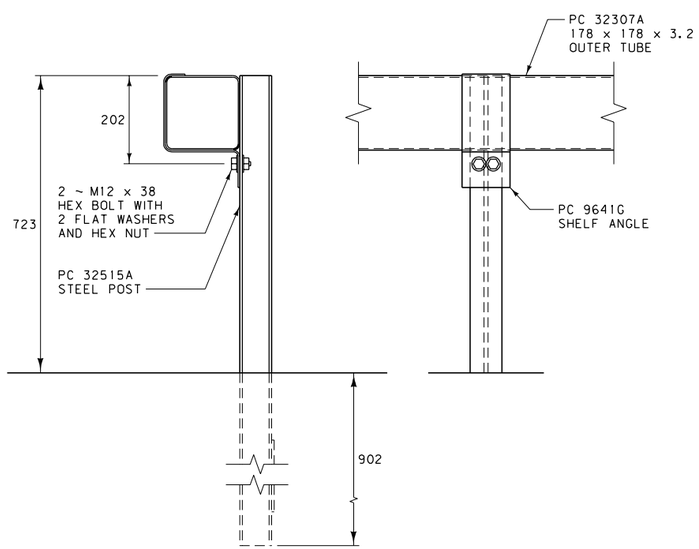

POST ATTACHMENT DETAIL
(TYP. AT POSTS P2, P3 AND P4)

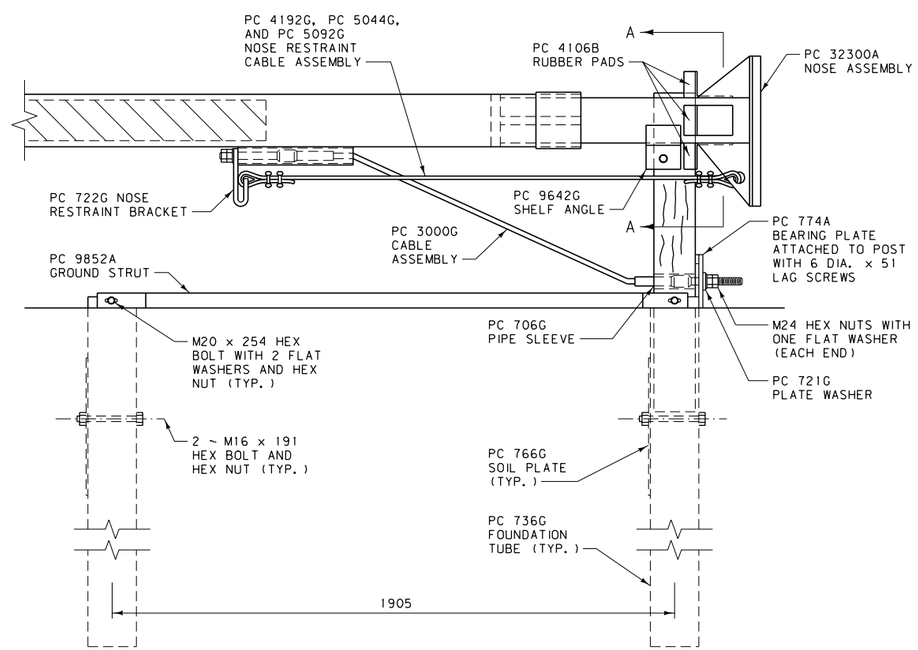

END ANCHORAGE ASSEMBLY

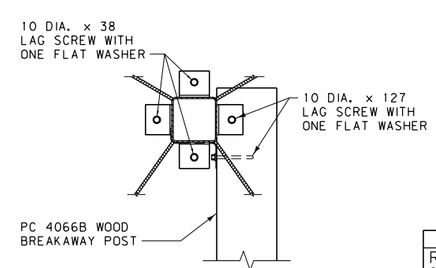

SECTION A-A

ALL DIMENSIONS ARE MILLIMETERS (mm) UNLESS OTHERWISE NOTED.

DETAILED DRAWING

REFERENCE STANDARD SPEC. SECTION 606

DWG. NO. 606-56A

WY-BET BOX
BEAM TERMINAL
SECTION DETAILS

EFFECTIVE: FEBRUARY 2005

MDT serving you with pride — MONTANA DEPARTMENT OF TRANSPORTATION

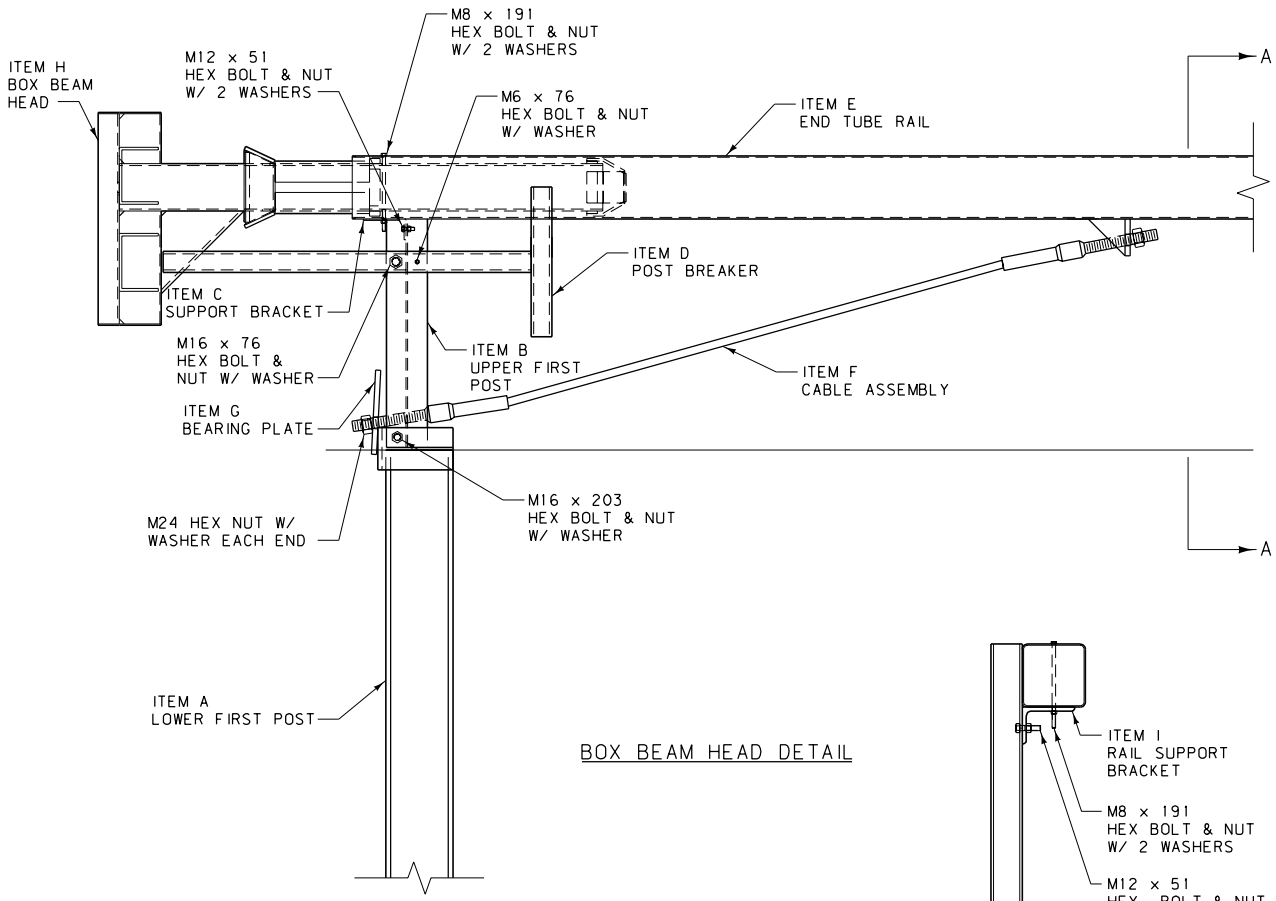

BOX BEAM HEAD DETAIL

BILL OF MATERIAL		
ITEM	QTY	DESCRIPTION
A	1	LOWER FIRST POST, W152 x 22.3 kg/m, 2440 LG.
B	1	UPPER FIRST POST, W152 x 13.4 kg/m, 546 LG.
C	1	SUPPORT BRACKET, 10 GA. (3.5 THK.) BENT PLATE
D	1	POST BREAKER
E	1	END TUBE RAIL, TS 152 x 152 x 3.2 x 3660
F	1	CABLE ASSEMBLY
G	1	BEARING PLATE
H	1	BOX BEAM HEAD
I	1	RAIL SUPPORT BRACKET, L 127 x 89 x 9.5 x 115
J	1	BOX BEAM POST W/ SOIL PLATE
K	2	END TUBE SECTION TIE PLATE
a	2	M8 x 191 HEX BOLT (GRADE 5)
b	1	M6 x 76 HEX BOLT (GRADE 2)
c	2	M12 x 51 HEX BOLT (GRADE 2)
d	8	M16 x 51 HEX BOLT (GRADE 5)
e	1	M16 x 203 HEX BOLT (GRADE 5)
f	1	M16 x 76 HEX BOLT (GRADE 5)
g	2	M8 HEX NUT
h	1	M6 HEX NUT
j	2	M12 HEX NUT
k	14	M16 HEX NUT
n	2	M24 ANCHOR CABLE HEX NUT
p	4	M8 WASHER
q	1	M6 WASHER
r	3	M12 WASHER
s	10	M16 WASHER
u	2	M24 ANCHOR CABLE WASHER

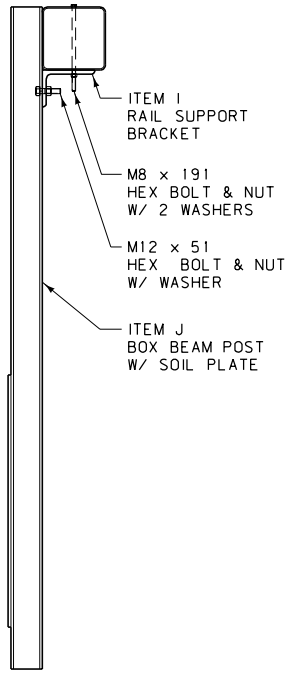

NOTE:

(1) BEAT TERMINAL SECTION TO INCLUDE 10.98 m OF BOX BEAM GUARDRAIL AS SHOWN ON DTL. DWG. NO. 606-55B.

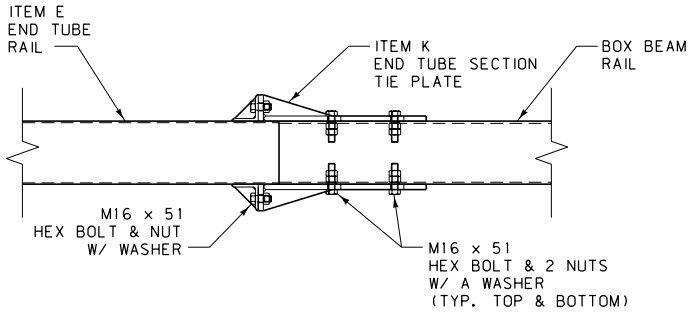

FIRST RAIL TIE DETAIL

SECTION "A-A"

ALL DIMENSIONS ARE MILLIMETERS (mm) UNLESS OTHERWISE NOTED.

DETAILED DRAWING

REFERENCE
STANDARD SPEC.
SECTION 606

DWG. NO.
606-56B

BEAT
BOX BEAM TERMINAL
SECTION DETAILS

EFFECTIVE: FEBRUARY 2005

MDT serving you with pride — MONTANA DEPARTMENT OF TRANSPORTATION

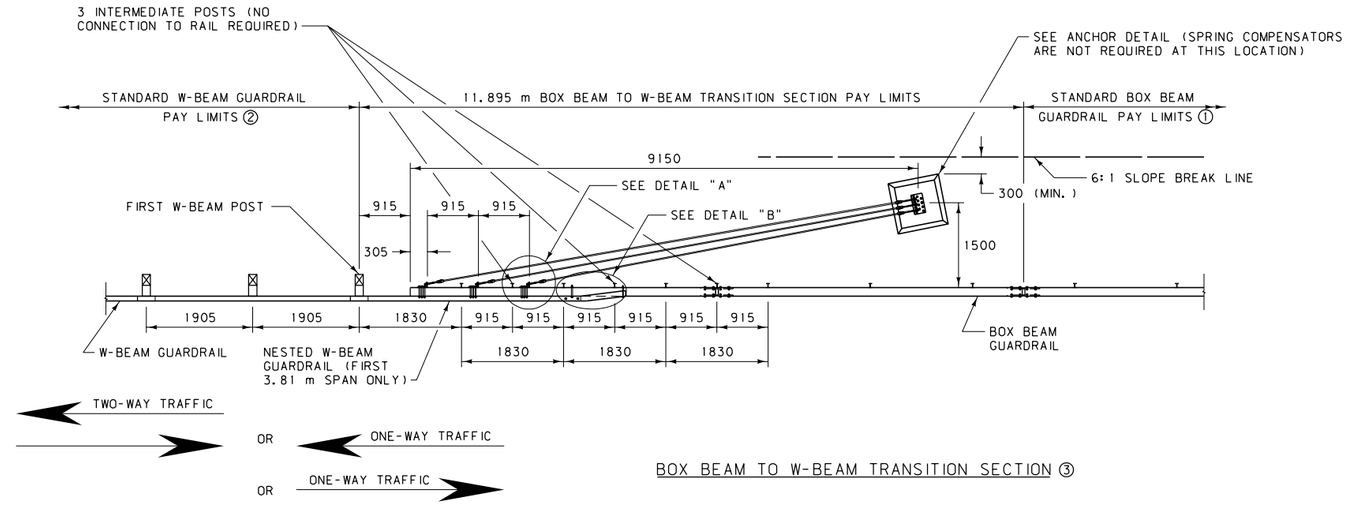

BOX BEAM TO W-BEAM TRANSITION SECTION ③

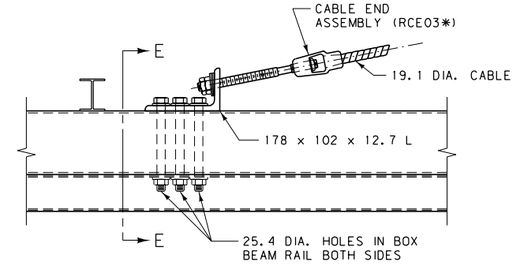

DETAIL A
PLAN

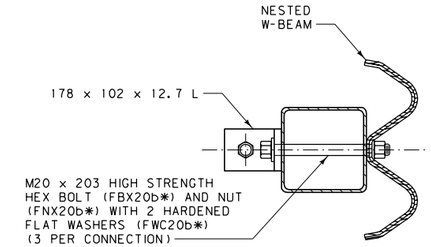

SECTION E-E

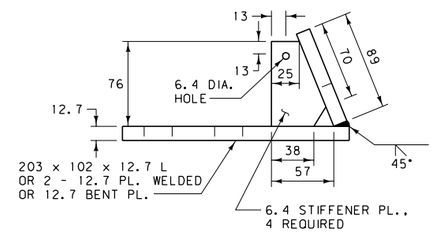

SECTION F-F

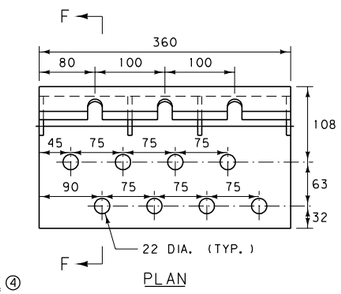

PLAN

ANCHOR ANGLE ④ DETAIL

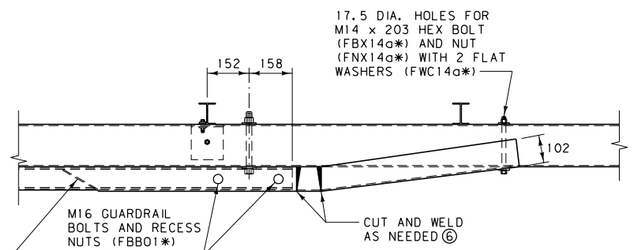

DETAIL B
PLAN

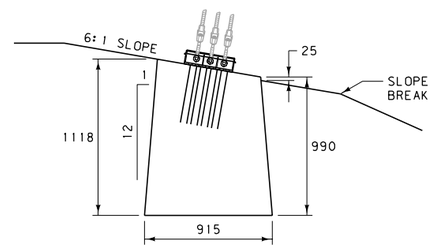

SECTION A-A

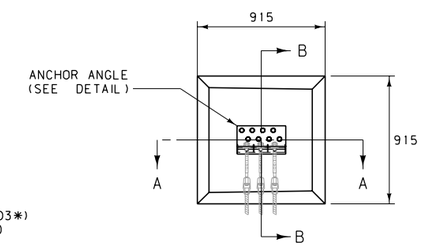

ANCHOR DETAIL ⑤
PLAN

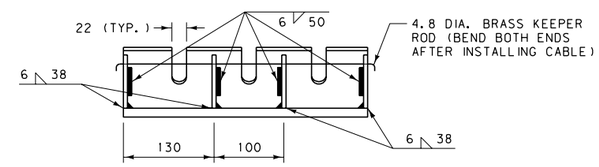

ELEVATION

CUT AND BEND AS NEEDED TO FIT W-BEAM ⑥

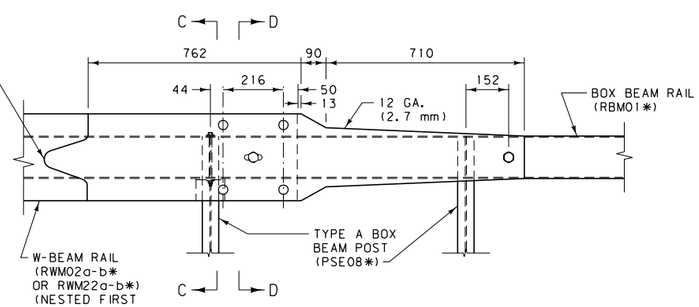

DETAIL B
ELEVATION

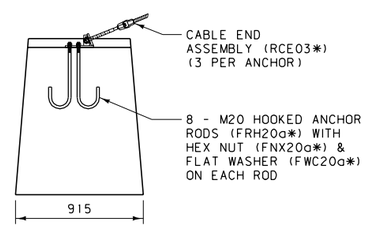

SECTION B-B

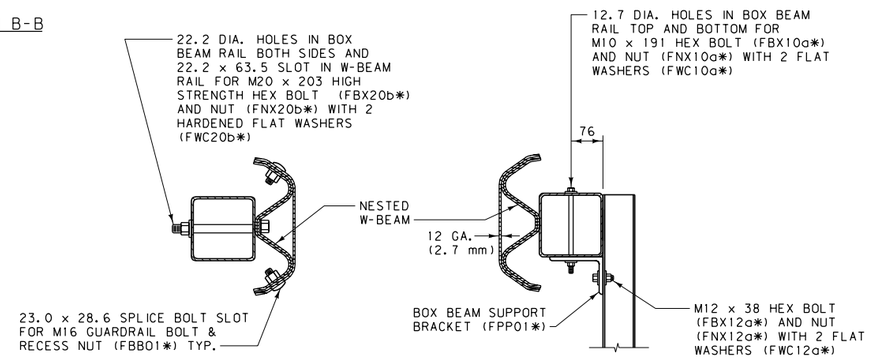

SECTION D-D

SECTION C-C

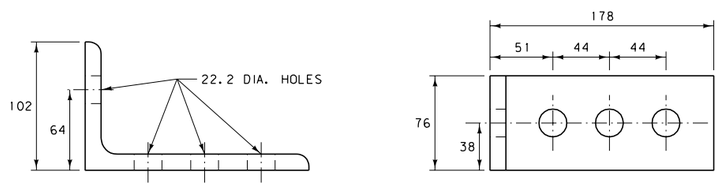

178 x 102 x 12.7 L
DETAIL

NOTES:

① SEE DTL. DWG. NO. 606-50 FOR STANDARD BOX BEAM GUARDRAIL AND ASSOCIATED DETAILS.

② SEE DTL. DWG. NO. 606-05A AND 606-05B FOR STANDARD W-BEAM GUARDRAIL AND ASSOCIATED DETAILS.

③ MANUFACTURE ANCHOR ANGLES USING AASHTO M270M GRADE 250 STEEL. ALL WELDING IS TO CONFORM TO THE APPLICABLE AWS CODE.

④ GALVANIZE ANCHOR ANGLES IN ACCORDANCE WITH AASHTO M111M. NO PUNCHING, DRILLING, WELDING OR CUTTING IS PERMITTED ON COMPONENTS AFTER GALVANIZING.

⑤ USE CLASS "DD" CONCRETE TO CONSTRUCT ANCHOR.

⑥ ANY HOLES, CUTS, SLOTS OR WELDS MADE ON THE W-BEAM OR BOX BEAM RAIL AFTER GALVANIZING IS TO BE PAINTED WITH AN APPROVED GALVANIZING PAINT.

⑦ LAP ALL W-BEAM SPLICES IN THE DIRECTION OF ADJACENT TRAFFIC.

* SEE DTL. DWG. NO. 606-80 FOR SCHEDULE OF GUARDRAIL HARDWARE.

ALL DIMENSIONS ARE MILLIMETERS (mm) UNLESS OTHERWISE NOTED.

DETAILED DRAWING	
REFERENCE STANDARD SPEC. SECTION 606	DWG. NO. 606-58
BOX BEAM TO W-BEAM TRANSITION SECTION	
EFFECTIVE: FEBRUARY 2005	
serving you with pride	MONTANA DEPARTMENT OF TRANSPORTATION

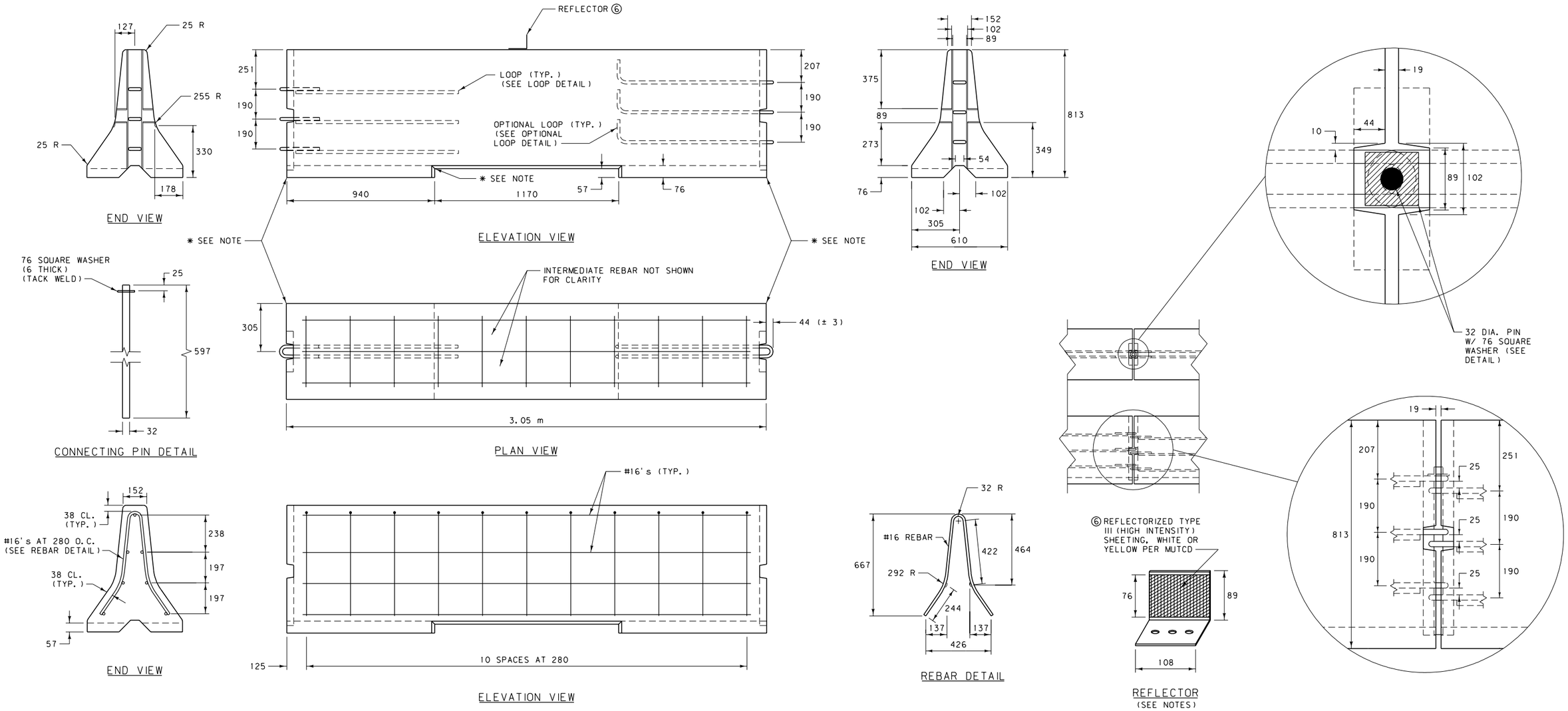

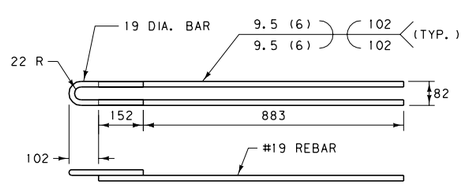

LOOP DETAIL

LOOP FABRICATION REQUIREMENTS:

1. USE REINFORCING STEEL CONFORMING TO ASTM A706M, GRADE 420 FOR REBAR BEING WELDED TO LOOPS.
2. LOOP ENDS CONSIST OF SMOOTH ROUND BARS CONFORMING TO AASHTO M270M, GRADE 250.
3. COLD BEND THE LOOPS BY USING A JIG THAT WILL PRODUCE AN ACCURATE RADIUS WITHOUT MARRING THE BAR. DO NOT HEAT THE BAR TO FACILITATE BENDING.
4. WELD REBAR TO LOOPS USING 3 mm DIA. E8018 ROD. DO NOT TACK WELD THE PIECES TOGETHER PRIOR TO WELDING.
5. USE A CERTIFIED WELDER IN ACCORDANCE WITH THE CURRENT EDITION OF AWS D1.4. DO NOT PLACE THE WELDED ASSEMBLY IN THE FORM UNTIL IT HAS BEEN INSPECTED.
6. NO ADDITIONAL WELDING IS PERMITTED ON THE SMOOTH ROUND BARS OR REINFORCING STEEL.

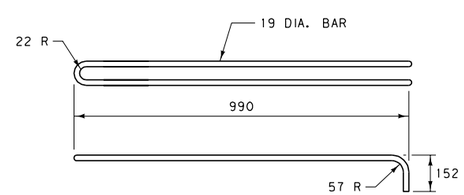

OPTIONAL LOOP DETAIL

OPTIONAL LOOP FABRICATION REQUIREMENTS:

1. USE CONTINUOUS SMOOTH ROUND BARS CONFORMING TO AASHTO M270M, GRADE 250 TO FABRICATE THE OPTIONAL LOOPS.
2. COLD BEND THE LOOPS BY USING A JIG THAT WILL PRODUCE AN ACCURATE RADIUS WITHOUT MARRING THE BAR. DO NOT HEAT THE BAR TO FACILITATE BENDING.
3. NO WELDING IS PERMITTED ON THE SMOOTH ROUND BARS OR REINFORCING STEEL.

NOTES:

① USE CLASS "DD" CONCRETE OR EQUIVALENT.

② REINFORCING STEEL CONSISTS OF DEFORMED BARS CONFORMING TO AASHTO M31M, GRADE 420.

③ CONNECT EACH 3.05 m SECTION WITH CONNECTING PINS AS DETAILED AND CONFORMING TO AASHTO M270M, GRADE 250 OR BETTER. CONNECTING PINS NEED NOT BE PAINTED.

④ CUTOUTS ON ENDS OF EACH SECTION ARE SHOWN WITH SLIGHT TAPER TO FACILITATE FORM REMOVAL. RECTANGULAR CUTOUTS ARE ACCEPTABLE.

⑤ THE CONTRACTOR IS RESPONSIBLE FOR THE PROPER FIT-UP OF THE PRECAST CONCRETE BARRIER RAIL. ASSEMBLE AND PIN SUFFICIENT NUMBER OF PRECAST SECTIONS IN THE FABRICATIONS PLANT TO DETERMINE THAT PROPER FIT-UP CAN BE MAINTAINED ON ALL ROADWAY ALIGNMENT, CURVES AS WELL AS ON TANGENT. THIS IS TO BE DETERMINED EARLY IN FABRICATION.

⑥ ATTACH REFLECTORS TO RAIL EVERY 9.15 METERS. FOLLOW THE MANUFACTURER'S SPECIFICATIONS FOR ADHESIVE MOUNTING. IN NARROW PAVED (FLUSH) MEDIAN APPLICATIONS, REFLECTORIZE BOTH SIDES.

* 19 mm CHAMFER ENTIRE OPENING (OR SUFFICIENTLY ROUNDED SO THAT A SMOOTH EDGE RESULTS.) 13 mm CHAMFER IS ACCEPTABLE.

ALL DIMENSIONS ARE MILLIMETERS (mm) UNLESS OTHERWISE NOTED.

DETAILED DRAWING	
REFERENCE STANDARD SPEC. SECTION 554, 606	DWG. NO. 606-60
CONCRETE BARRIER RAIL	
EFFECTIVE: FEBRUARY 2005	

MDT serving you with pride — MONTANA DEPARTMENT OF TRANSPORTATION

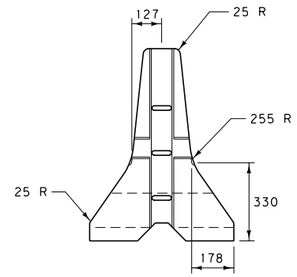

END VIEW

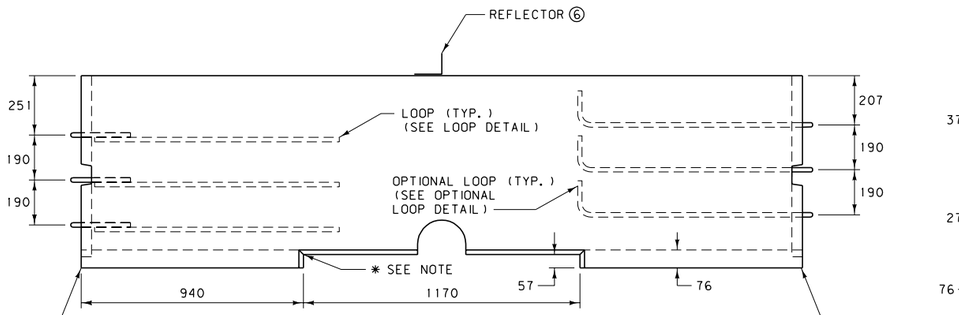

ELEVATION VIEW

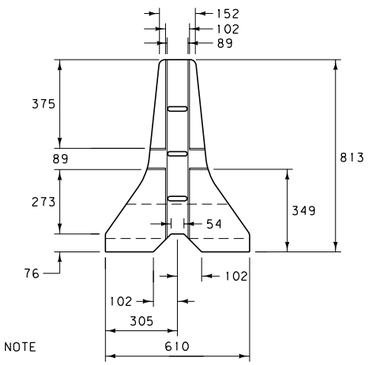

END VIEW

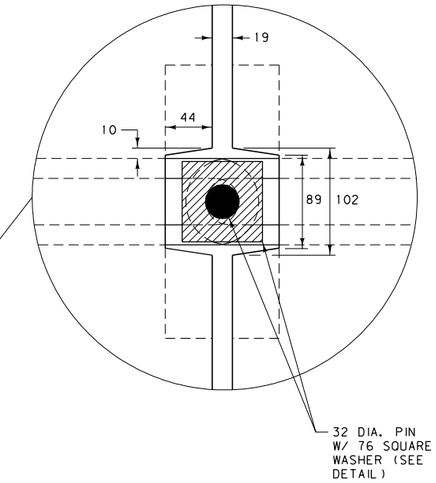

✱ SEE NOTE

✱ SEE NOTE

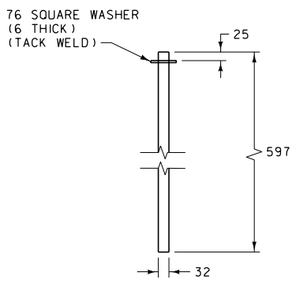

CONNECTING PIN DETAIL

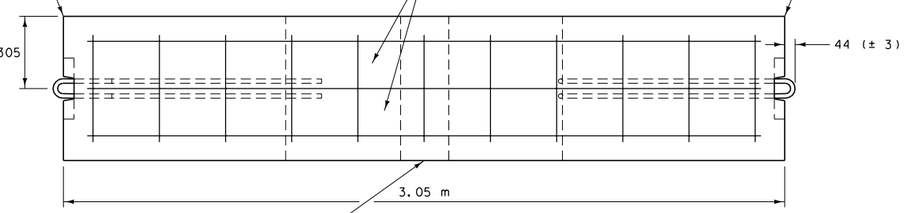

PLAN VIEW

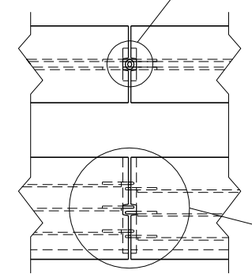

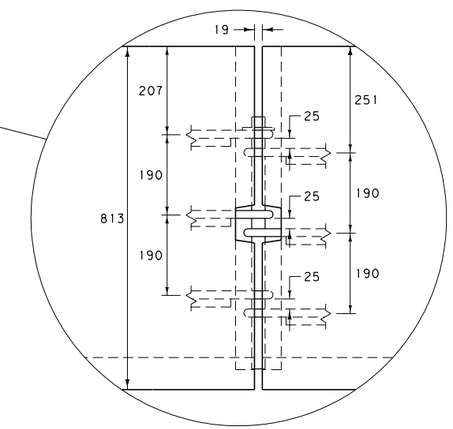

200 DIA. HOLE
FOR SPECIFIC SITES
SENSITIVE TO SMALL
ANIMAL CROSSINGS ✱✱

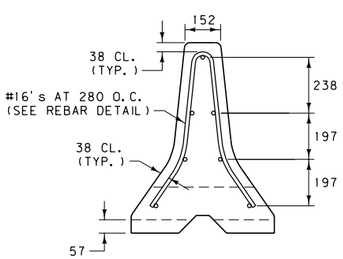

END VIEW

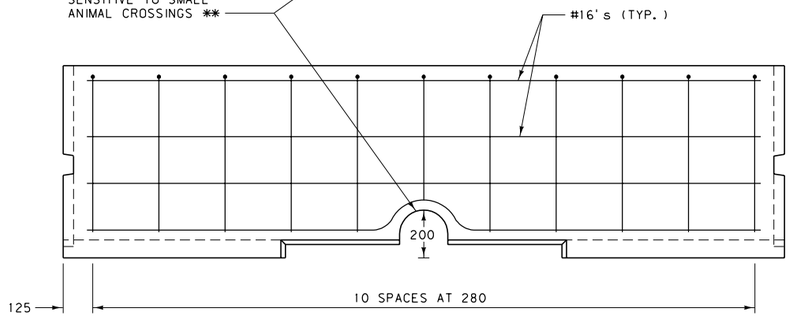

ELEVATION VIEW

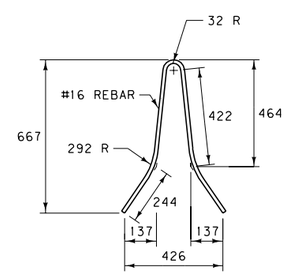

REBAR DETAIL

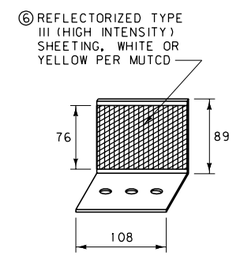

REFLECTOR
(SEE NOTES)

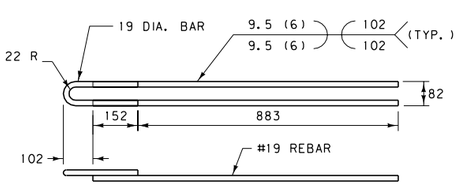

LOOP DETAIL

LOOP FABRICATION REQUIREMENTS:

1. USE REINFORCING STEEL CONFORMING TO ASTM A706M, GRADE 420 FOR REBAR BEING WELDED TO LOOPS.
2. LOOP ENDS CONSIST OF SMOOTH ROUND BARS CONFORMING TO AASHTO M270M, GRADE 250.
3. COLD BEND THE LOOPS BY USING A JIG THAT WILL PRODUCE AN ACCURATE RADIUS WITHOUT MARRING THE BAR. DO NOT HEAT THE BAR TO FACILITATE BENDING.
4. WELD REBAR TO LOOPS USING 3 mm DIA. E8018 ROD. DO NOT TACK WELD THE PIECES TOGETHER PRIOR TO WELDING.
5. USE A CERTIFIED WELDER IN ACCORDANCE WITH THE CURRENT EDITION OF AWS D1.4. DO NOT PLACE THE WELDED ASSEMBLY IN THE FORM UNTIL IT HAS BEEN INSPECTED.
6. NO ADDITIONAL WELDING IS PERMITTED ON THE SMOOTH ROUND BARS OR REINFORCING STEEL.

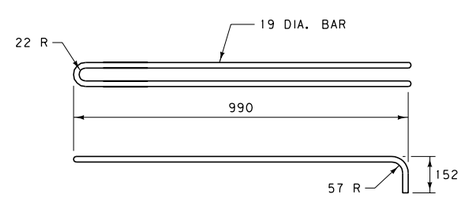

OPTIONAL LOOP DETAIL

OPTIONAL LOOP FABRICATION REQUIREMENTS:

1. USE CONTINUOUS SMOOTH ROUND BARS CONFORMING TO AASHTO M270M, GRADE 250 TO FABRICATE THE OPTIONAL LOOPS.
2. COLD BEND THE LOOPS BY USING A JIG THAT WILL PRODUCE AN ACCURATE RADIUS WITHOUT MARRING THE BAR. DO NOT HEAT THE BAR TO FACILITATE BENDING.
3. NO WELDING IS PERMITTED ON THE SMOOTH ROUND BARS OR REINFORCING STEEL.

NOTES:

① USE CLASS "DD" CONCRETE OR EQUIVALENT.

② REINFORCING STEEL CONSISTS OF DEFORMED BARS CONFORMING TO AASHTO M31M, GRADE 420.

③ CONNECT EACH 3.05 m SECTION WITH CONNECTING PINS AS DETAILED AND CONFORMING TO AASHTO M270M, GRADE 250 OR BETTER. CONNECTING PINS NEED NOT BE PAINTED.

④ CUTOUTS ON ENDS OF EACH SECTION ARE SHOWN WITH SLIGHT TAPER TO FACILITATE FORM REMOVAL. RECTANGULAR CUTOUTS ARE ACCEPTABLE.

⑤ THE CONTRACTOR IS RESPONSIBLE FOR THE PROPER FIT-UP OF THE PRECAST CONCRETE BARRIER RAIL. ASSEMBLE AND PIN SUFFICIENT NUMBER OF PRECAST SECTIONS IN THE FABRICATIONS PLANT TO DETERMINE THAT PROPER FIT-UP CAN BE MAINTAINED ON ALL ROADWAY ALIGNMENT, CURVES AS WELL AS ON TANGENT. THIS IS TO BE DETERMINED EARLY IN FABRICATION.

⑥ ATTACH REFLECTORS TO RAIL EVERY 9.15 METERS. FOLLOW THE MANUFACTURER'S SPECIFICATIONS FOR ADHESIVE MOUNTING. IN NARROW PAVED (FLUSH) MEDIAN APPLICATIONS, REFLECTORIZE BOTH SIDES.

✱ 19 mm CHAMFER ENTIRE OPENING (OR SUFFICIENTLY ROUNDED SO THAT A SMOOTH EDGE RESULTS.) 13 mm CHAMFER IS ACCEPTABLE.

✱✱ USE THIS RAIL ON A CASE-BY-CASE BASIS AS SPECIFIED IN THE PLANS.

ALL DIMENSIONS ARE MILLIMETERS (mm) UNLESS OTHERWISE NOTED.

DETAILED DRAWING	
REFERENCE STANDARD SPEC. SECTION 554.606	DWG. NO. 606-61
ALTERNATE CONCRETE BARRIER RAIL	
EFFECTIVE: FEBRUARY 2005	
serving you with pride	MONTANA DEPARTMENT OF TRANSPORTATION

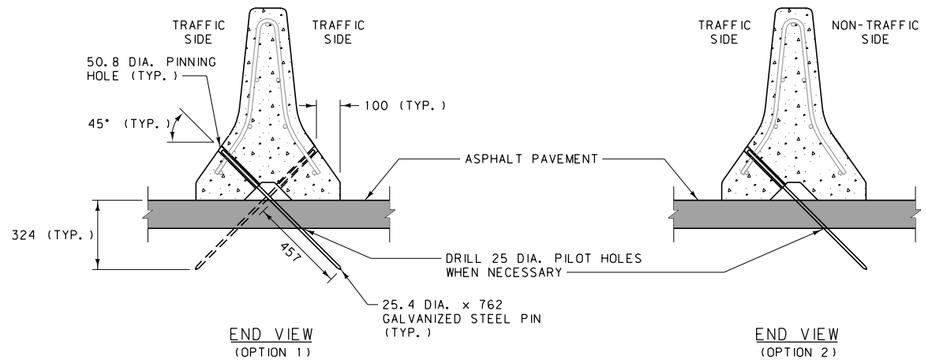

END VIEW (OPTION 1)

END VIEW (OPTION 2)

TYPE 1 ANCHOR
(FOR TEMPORARY OR PERMANENT CONCRETE BARRIER RAIL INSTALLATIONS ON ASPHALT PAVEMENT)

OPTION 1 = TRAFFIC ON BOTH SIDES OF C.B.R.
OPTION 2 = TRAFFIC ON ONE SIDE OF C.B.R.

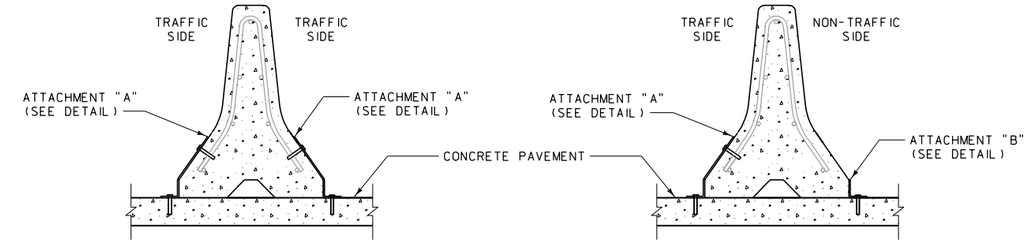

END VIEW (OPTION 1)

END VIEW (OPTION 2)

TYPE 2 & 3 ANCHORS
(FOR TEMPORARY CONCRETE BARRIER RAIL INSTALLATIONS ON CONCRETE PAVEMENT)

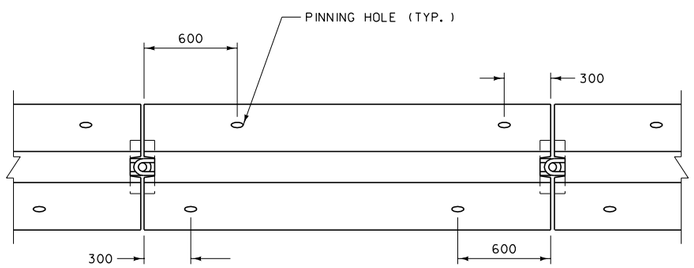

TYPE 1 ANCHOR
PLAN VIEW

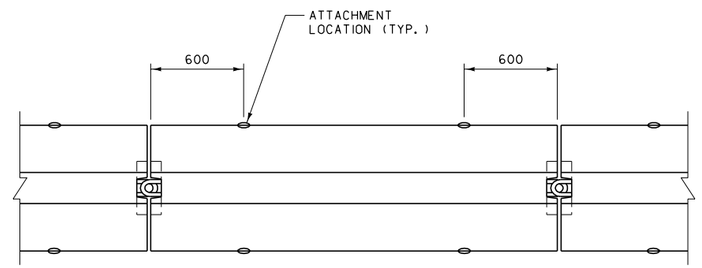

TYPE 2 ANCHOR
PLAN VIEW

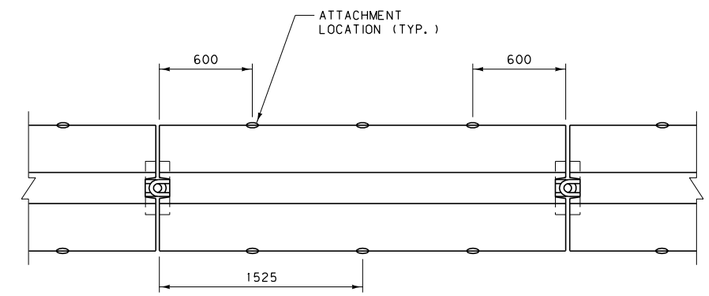

TYPE 3 ANCHOR
PLAN VIEW

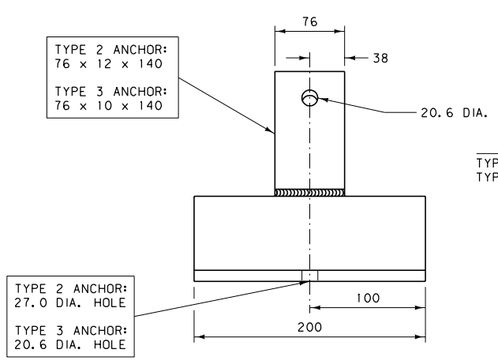

ATTACHMENT "A" DETAIL

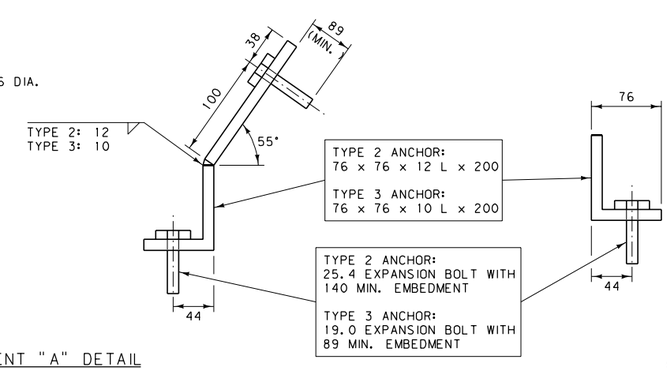

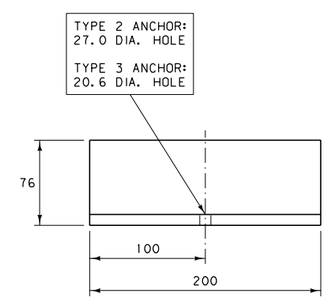

ATTACHMENT "B" DETAIL

NOTES:

1. USE THESE ANCHORS WITH STANDARD CONCRETE BARRIER RAIL (C.B.R.), AS SHOWN IN DTL. DWG. NO. 606-60, WHEN DEFLECTION OF THE SYSTEM NEEDS TO BE LIMITED.
2. CAST THE PINNING HOLES INTO THE C.B.R USING 50.8 I.D. STEEL PIPE. DO NOT DRILL THE PINNING HOLES.
3. USE STEEL CONFORMING TO AASHTO M270M, GRADE 250 OR BETTER FOR PINS AND ATTACHMENT ANGLES. GALVANIZE IN ACCORDANCE WITH AASHTO M111M.
4. USE TYPE 2 ANCHORS WHEN A DEEPER EMBEDMENT (140 mm) INTO THE BRIDGE DECK OR CONCRETE PAVEMENT IS PERMISSIBLE.
5. ADJUST THE LOCATION OF THE TYPE 2 OR TYPE 3 ANCHORS TO AVOID THE MAIN REINFORCING WHEN PLACED ON BRIDGE DECKS.
6. USE SHIMS TO PROPERLY FIT THE TYPE 2 OR TYPE 3 ANCHORS TO THE BARRIER AND ROADWAY SURFACES.
7. AFTER REMOVING TYPE 2 OR TYPE 3 ANCHORS, CLEAN THE HOLES IN THE CONCRETE PAVEMENT AND FILL WITH AN APPROVED NON-SHRINK OR EPOXY GROUT.
8. REMOVE TYPE 1 ANCHORS BY FIRST DRIVING THE STEEL PINS DOWN THROUGH THE BARRIER TO ALLOW LIFTING OF THE BARRIER WITHOUT INTERFERENCE. THEN REMOVE THE PINS FROM THE PAVEMENT AND FILL THE PINNING HOLES WITH AN APPROVED SEALANT.

ALL DIMENSIONS ARE MILLIMETERS (mm) UNLESS OTHERWISE NOTED.

DETAILED DRAWING

REFERENCE STANDARD SPEC. SECTION 554.606	DWG. NO. 606-62

CONCRETE BARRIER RAIL ANCHORS

EFFECTIVE: FEBRUARY 2005

MDT serving you with pride — MONTANA DEPARTMENT OF TRANSPORTATION

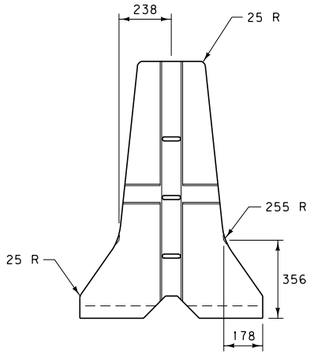

END VIEW

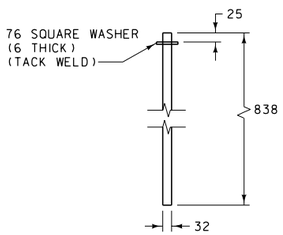

CONNECTING PIN DETAIL

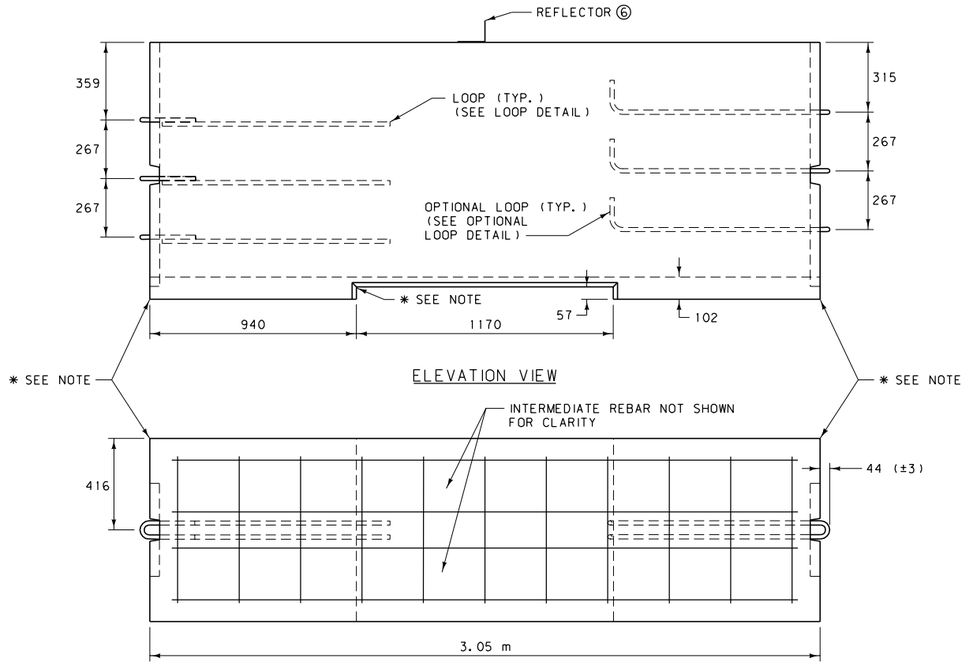

ELEVATION VIEW

PLAN VIEW

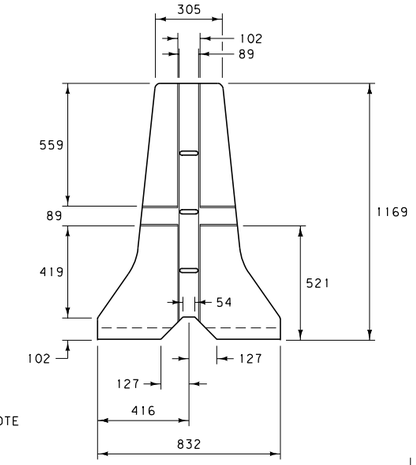

END VIEW

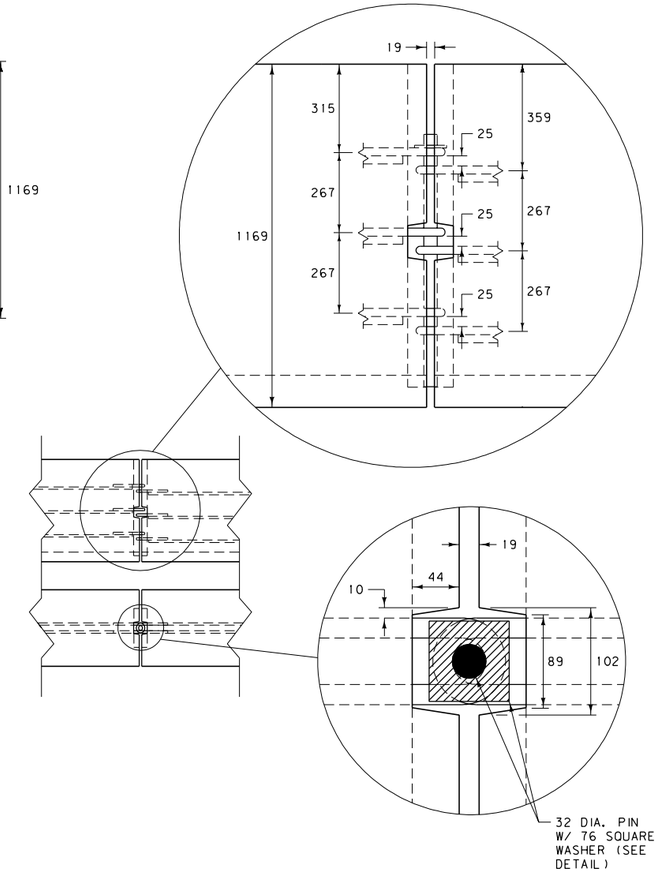

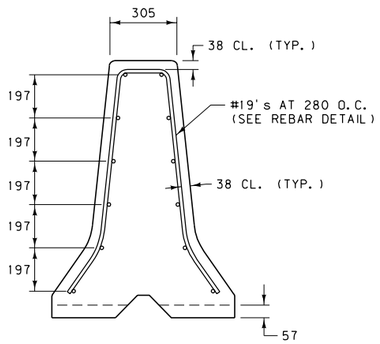

END VIEW

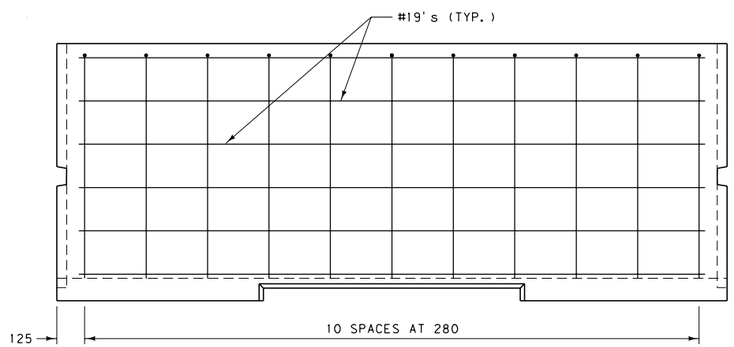

ELEVATION VIEW

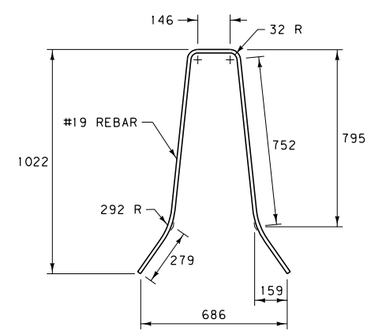

REBAR DETAIL

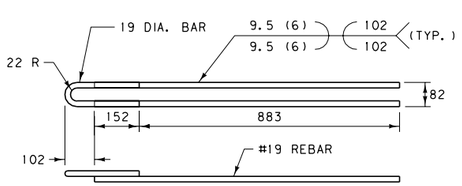

LOOP DETAIL

LOOP FABRICATION REQUIREMENTS:

1. USE REINFORCING STEEL CONFORMING TO ASTM A706M, GRADE 420 FOR REBAR BEING WELDED TO LOOPS.
2. LOOP ENDS CONSIST OF SMOOTH ROUND BARS CONFORMING TO AASHTO M270M, GRADE 250.
3. COLD BEND THE LOOPS BY USING A JIG THAT WILL PRODUCE AN ACCURATE RADIUS WITHOUT MARRING THE BAR. DO NOT HEAT THE BAR TO FACILITATE BENDING.
4. WELD REBAR TO LOOPS USING 3 mm DIA. E8018 ROD. DO NOT TACK WELD THE PIECES TOGETHER PRIOR TO WELDING.
5. USE A CERTIFIED WELDER IN ACCORDANCE WITH THE CURRENT EDITION OF AWS D1.4. DO NOT PLACE THE WELDED ASSEMBLY IN THE FORM UNTIL IT HAS BEEN INSPECTED.
6. NO ADDITIONAL WELDING IS PERMITTED ON THE SMOOTH ROUND BARS OR REINFORCING STEEL.

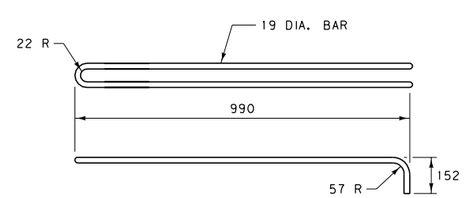

OPTIONAL LOOP DETAIL

OPTIONAL LOOP FABRICATION REQUIREMENTS:

1. USE CONTINUOUS SMOOTH ROUND BARS CONFORMING TO AASHTO M270M, GRADE 250 TO FABRICATE THE OPTIONAL LOOPS.
2. COLD BEND THE LOOPS BY USING A JIG THAT WILL PRODUCE AN ACCURATE RADIUS WITHOUT MARRING THE BAR. DO NOT HEAT THE BAR TO FACILITATE BENDING.
3. NO WELDING IS PERMITTED ON THE SMOOTH ROUND BARS OR REINFORCING STEEL.

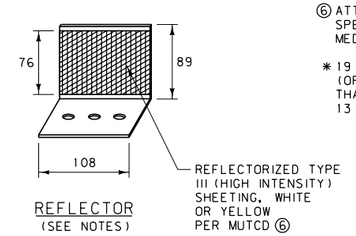

REFLECTOR
(SEE NOTES)

NOTES:

① USE CLASS "DD" CONCRETE OR EQUIVALENT.

② REINFORCING STEEL CONSISTS OF DEFORMED BARS CONFORMING TO AASHTO M31M, GRADE 420.

③ CONNECT EACH 3.05 m SECTION WITH CONNECTING PINS AS DETAILED AND CONFORMING TO AASHTO M270M, GRADE 250 OR BETTER. CONNECTING PINS NEED NOT BE PAINTED.

④ CUTOUTS ON ENDS OF EACH SECTION ARE SHOWN WITH SLIGHT TAPER TO FACILITATE FORM REMOVAL. RECTANGULAR CUTOUTS ARE ACCEPTABLE.

⑤ THE CONTRACTOR IS RESPONSIBLE FOR THE PROPER FIT-UP OF THE PRECAST CONCRETE BARRIER RAIL. ASSEMBLE AND PIN SUFFICIENT NUMBER OF PRECAST SECTIONS IN THE FABRICATIONS PLANT TO DETERMINE THAT PROPER FIT-UP CAN BE MAINTAINED ON ALL ROADWAY ALIGNMENT, CURVES AS WELL AS ON TANGENT. THIS IS TO BE DETERMINED EARLY IN FABRICATION.

⑥ ATTACH REFLECTORS TO RAIL EVERY 9.15 m. FOLLOW THE MANUFACTURER'S SPECIFICATIONS FOR ADHESIVE MOUNTING. IN NARROW PAVED (FLUSH) MEDIAN APPLICATIONS, REFLECTORIZE BOTH SIDES.

✱ 19 mm CHAMFER ENTIRE OPENING (OR SUFFICIENTLY ROUNDED SO THAT A SMOOTH EDGE RESULTS.) 13 mm CHAMFER IS ACCEPTABLE.

ALL DIMENSIONS ARE MILLIMETERS (mm) UNLESS OTHERWISE NOTED.

DETAILED DRAWING	
REFERENCE STANDARD SPEC. SECTION 554.606	DWG. NO. 606-64
TALL CONCRETE BARRIER RAIL	
EFFECTIVE: FEBRUARY 2005	
serving you with pride	MONTANA DEPARTMENT OF TRANSPORTATION

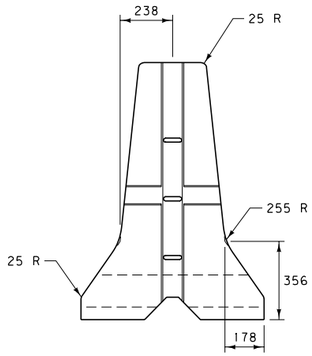

END VIEW

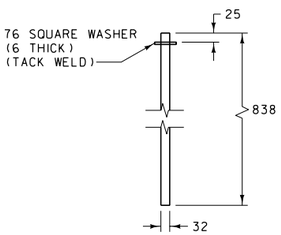

CONNECTING PIN DETAIL

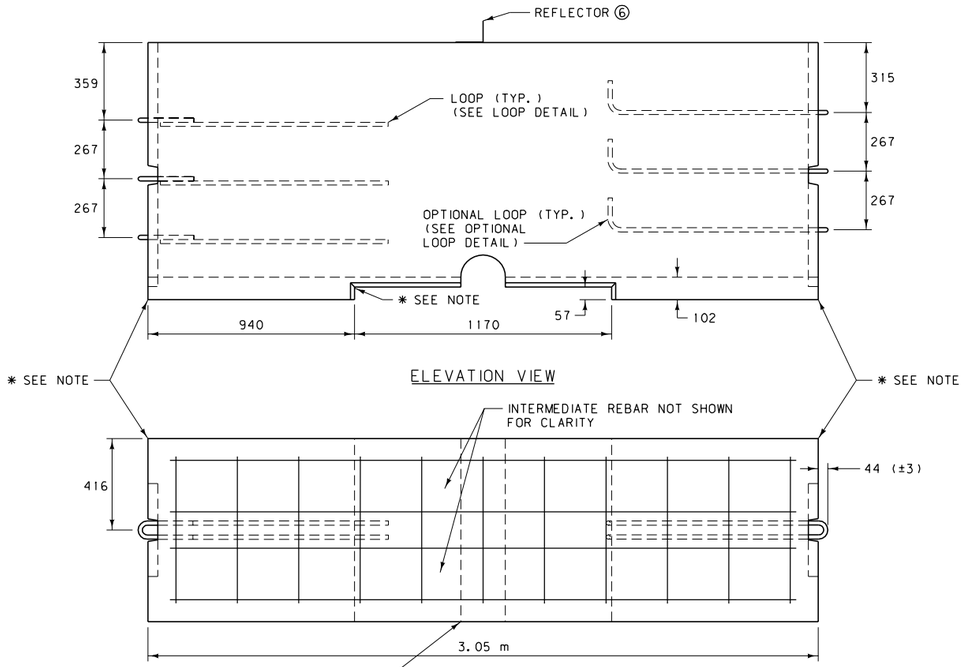

ELEVATION VIEW

PLAN VIEW

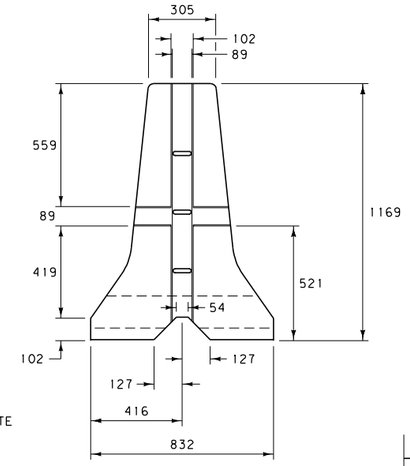

END VIEW

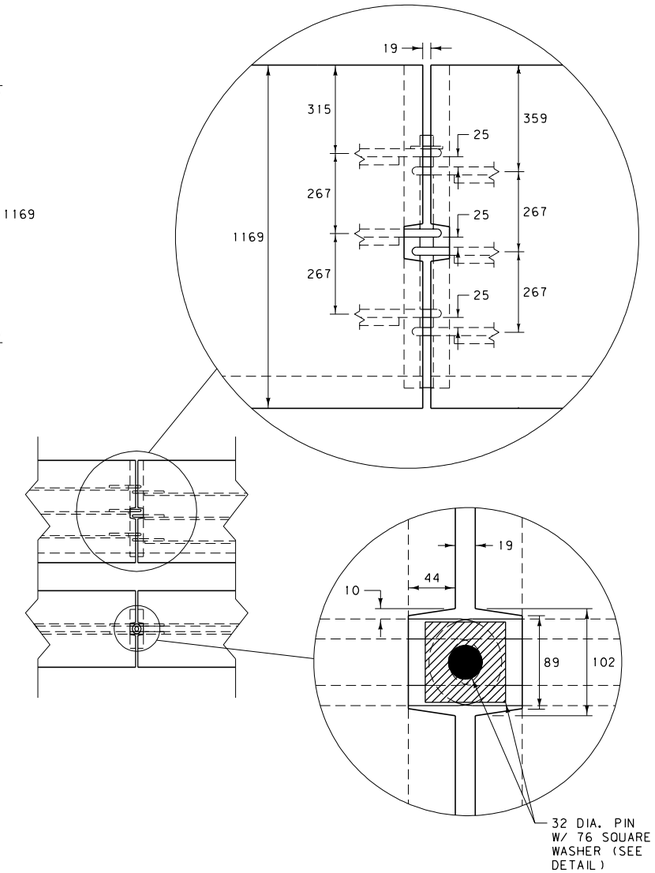

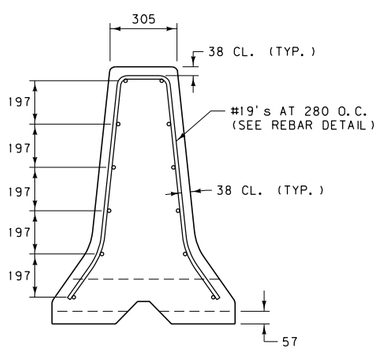

END VIEW

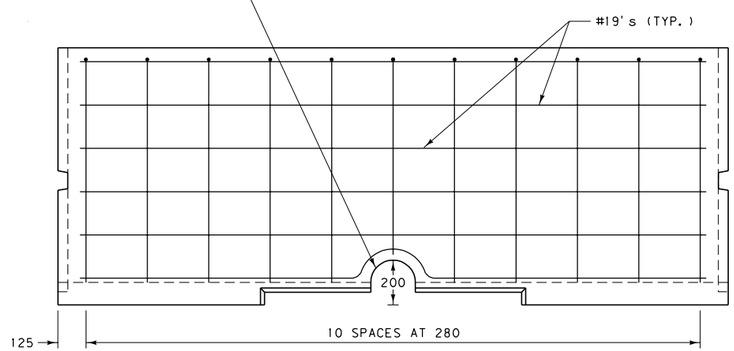

ELEVATION VIEW

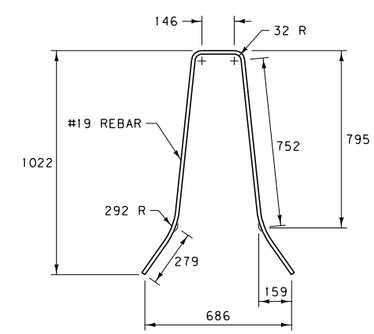

REBAR DETAIL

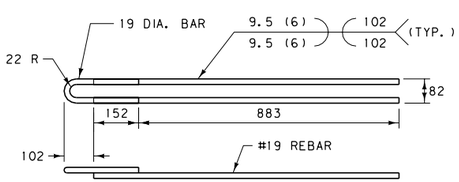

LOOP DETAIL

LOOP FABRICATION REQUIREMENTS:

1. USE REINFORCING STEEL CONFORMING TO ASTM A706M, GRADE 420 FOR REBAR BEING WELDED TO LOOPS.
2. LOOP ENDS CONSIST OF SMOOTH ROUND BARS CONFORMING TO AASHTO M270M, GRADE 250.
3. COLD BEND THE LOOPS BY USING A JIG THAT WILL PRODUCE AN ACCURATE RADIUS WITHOUT MARRING THE BAR. DO NOT HEAT THE BAR TO FACILITATE BENDING.
4. WELD REBAR TO LOOPS USING 3 mm DIA. E8018 ROD. DO NOT TACK WELD THE PIECES TOGETHER PRIOR TO WELDING.
5. USE A CERTIFIED WELDER IN ACCORDANCE WITH THE CURRENT EDITION OF AWS D1.4. DO NOT PLACE THE WELDED ASSEMBLY IN THE FORM UNTIL IT HAS BEEN INSPECTED.
6. NO ADDITIONAL WELDING IS PERMITTED ON THE SMOOTH ROUND BARS OR REINFORCING STEEL.

OPTIONAL LOOP DETAIL

OPTIONAL LOOP FABRICATION REQUIREMENTS:

1. USE CONTINUOUS SMOOTH ROUND BARS CONFORMING TO AASHTO M270M, GRADE 250 TO FABRICATE THE OPTIONAL LOOPS.
2. COLD BEND THE LOOPS BY USING A JIG THAT WILL PRODUCE AN ACCURATE RADIUS WITHOUT MARRING THE BAR. DO NOT HEAT THE BAR TO FACILITATE BENDING.
3. NO WELDING IS PERMITTED ON THE SMOOTH ROUND BARS OR REINFORCING STEEL.

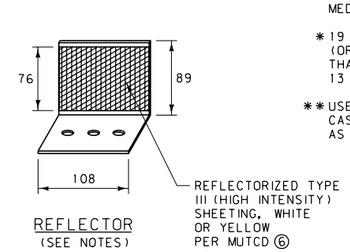

REFLECTOR
(SEE NOTES)

NOTES:

① USE CLASS "DD" CONCRETE OR EQUIVALENT.

② REINFORCING STEEL CONSISTS OF DEFORMED BARS CONFORMING TO AASHTO M31M, GRADE 420.

③ CONNECT EACH 3.05 m SECTION WITH CONNECTING PINS AS DETAILED AND CONFORMING TO AASHTO M270M, GRADE 250 OR BETTER. CONNECTING PINS NEED NOT BE PAINTED.

④ CUTOUTS ON ENDS OF EACH SECTION ARE SHOWN WITH SLIGHT TAPER TO FACILITATE FORM REMOVAL. RECTANGULAR CUTOUTS ARE ACCEPTABLE.

⑤ THE CONTRACTOR IS RESPONSIBLE FOR THE PROPER FIT-UP OF THE PRECAST CONCRETE BARRIER RAIL. ASSEMBLE AND PIN SUFFICIENT NUMBER OF PRECAST SECTIONS IN THE FABRICATIONS PLANT TO DETERMINE THAT PROPER FIT-UP CAN BE MAINTAINED ON ALL ROADWAY ALIGNMENT, CURVES AS WELL AS ON TANGENT. THIS IS TO BE DETERMINED EARLY IN FABRICATION.

⑥ ATTACH REFLECTORS TO RAIL EVERY 9.15 m. FOLLOW THE MANUFACTURER'S SPECIFICATIONS FOR ADHESIVE MOUNTING. IN NARROW PAVED (FLUSH) MEDIAN APPLICATIONS, REFLECTORIZE BOTH SIDES.

* 19 mm CHAMFER ENTIRE OPENING (OR SUFFICIENTLY ROUNDED SO THAT A SMOOTH EDGE RESULTS.) 13 mm CHAMFER IS ACCEPTABLE.

** USE THIS RAIL ON A CASE BY CASE BASIS AS SPECIFIED IN PLANS.

ALL DIMENSIONS ARE MILLIMETERS (mm) UNLESS OTHERWISE NOTED.

DETAILED DRAWING	
REFERENCE STANDARD SPEC. SECTION 554.606	DWG. NO. 606-65
ALTERNATE TALL CONCRETE BARRIER RAIL	
EFFECTIVE: FEBRUARY 2005	

MDT serving you with pride — MONTANA DEPARTMENT OF TRANSPORTATION

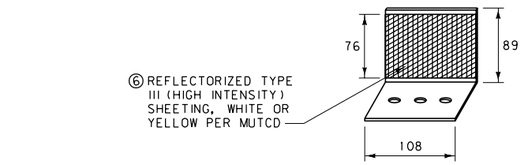

REFLECTOR
(SEE NOTES)

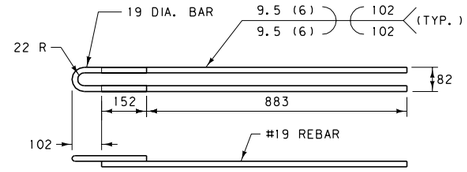

LOOP DETAIL

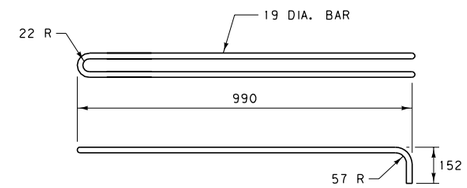

OPTIONAL LOOP DETAIL

LOOP FABRICATION REQUIREMENTS:

1. USE REINFORCING STEEL CONFORMING TO ASTM A706M, GRADE 420 FOR REBAR BEING WELDED TO LOOPS.
2. LOOP ENDS CONSIST OF SMOOTH ROUND BARS CONFORMING TO AASHTO M270M, GRADE 250.
3. COLD BEND THE LOOPS BY USING A JIG THAT WILL PRODUCE AN ACCURATE RADIUS WITHOUT MARRING THE BAR. DO NOT HEAT THE BAR TO FACILITATE BENDING.
4. WELD REBAR TO LOOPS USING 3 mm DIA. E8018 ROD. DO NOT TACK WELD THE PIECES TOGETHER PRIOR TO WELDING.
5. USE A CERTIFIED WELDER IN ACCORDANCE WITH THE CURRENT EDITION OF AWS D1.4. DO NOT PLACE THE WELDED ASSEMBLY IN THE FORM UNTIL IT HAS BEEN INSPECTED.
6. NO ADDITIONAL WELDING IS PERMITTED ON THE SMOOTH ROUND BARS OR REINFORCING STEEL.

OPTIONAL LOOP FABRICATION REQUIREMENTS:

1. USE CONTINUOUS SMOOTH ROUND BARS CONFORMING TO AASHTO M270M, GRADE 250 TO FABRICATE THE OPTIONAL LOOPS.
2. COLD BEND THE LOOPS BY USING A JIG THAT WILL PRODUCE AN ACCURATE RADIUS WITHOUT MARRING THE BAR. DO NOT HEAT THE BAR TO FACILITATE BENDING.
3. NO WELDING IS PERMITTED ON THE SMOOTH ROUND BARS OR REINFORCING STEEL.

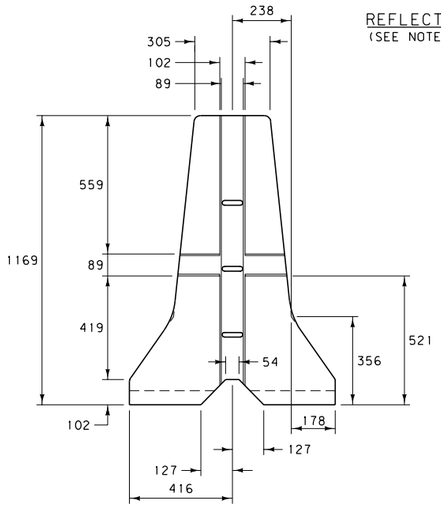

LEFT END VIEW

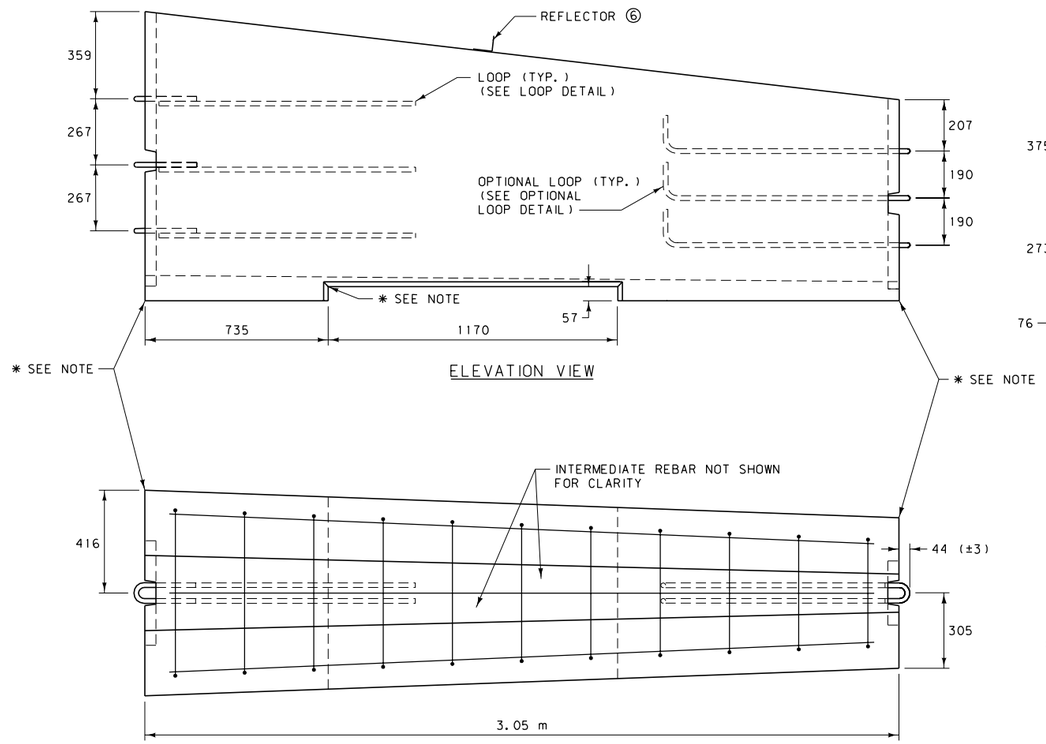

ELEVATION VIEW

PLAN VIEW

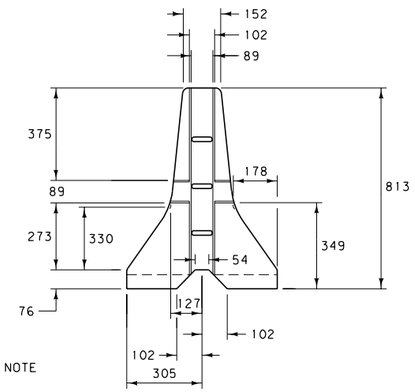

RIGHT END VIEW

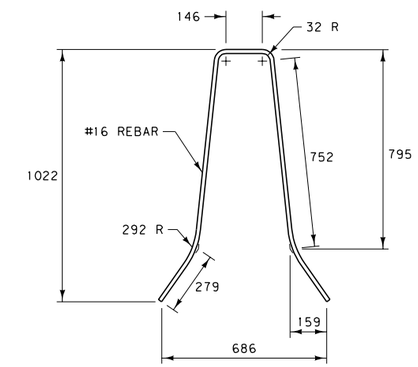

REBAR DETAIL LEFT END

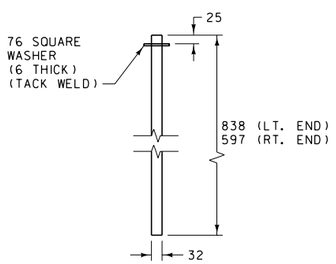

CONNECTING PIN DETAIL

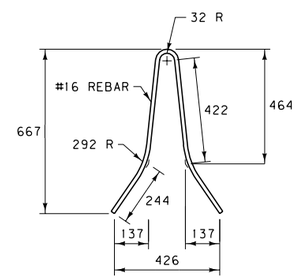

REBAR DETAIL RIGHT END

NOTE:

LEFT AND RIGHT REBAR DETAILS ARE FOR NORMAL TALL AND REGULAR CONCRETE BARRIER RAIL SECTIONS. TAPER REBAR HEIGHT AND WIDTH AS NEEDED BY MAINTAINING THE VERTICAL POSITION FROM THE BOTTOM AND THE 38 mm CLEARANCE AT ALL LOCATIONS.

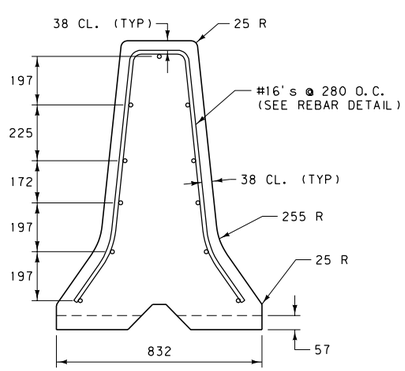

LEFT END VIEW

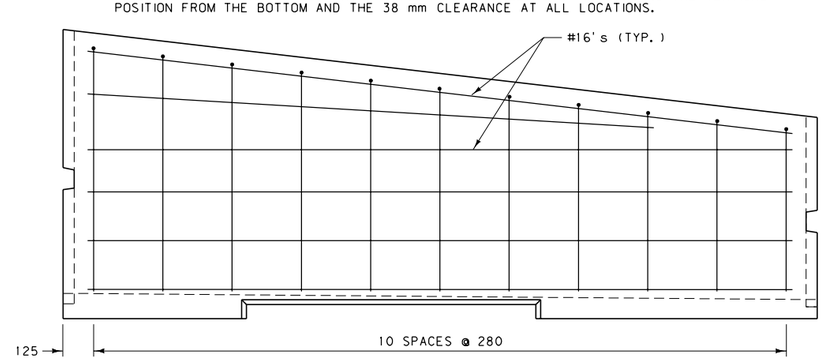

ELEVATION VIEW

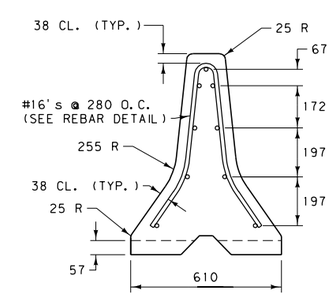

RIGHT END VIEW

NOTES:

① USE CLASS "DD" CONCRETE OR EQUIVALENT.

② REINFORCING STEEL CONSISTS OF DEFORMED BARS CONFORMING TO AASHTO M31M, GRADE 420.

③ CONNECT EACH 3.05 m SECTION WITH CONNECTING PINS AS DETAILED AND CONFORMING TO AASHTO M270M, GRADE 250 OR BETTER. CONNECTING PINS NEED NOT BE PAINTED.

④ CUTOUTS ON ENDS OF EACH SECTION ARE SHOWN WITH SLIGHT TAPER TO FACILITATE FORM REMOVAL. RECTANGULAR CUTOUTS ARE ACCEPTABLE.

⑤ THE CONTRACTOR IS RESPONSIBLE FOR THE PROPER FIT-UP OF THE PRECAST CONCRETE BARRIER RAIL. ASSEMBLE AND PIN SUFFICIENT NUMBER OF PRECAST SECTIONS IN THE FABRICATIONS PLANT TO DETERMINE THAT PROPER FIT-UP CAN BE MAINTAINED ON ALL ROADWAY ALIGNMENT, CURVES AS WELL AS ON TANGENT. THIS IS TO BE DETERMINED EARLY IN FABRICATION.

⑥ ATTACH REFLECTORS TO RAIL EVERY 9.15 m. FOLLOW THE MANUFACTURER'S SPECIFICATIONS FOR ADHESIVE MOUNTING. IN NARROW PAVED (FLUSH) MEDIAN APPLICATIONS, REFLECTORIZE BOTH SIDES.

⑦ SEE DETAILED DRAWINGS 606-60 AND 606-64 FOR INFORMATION ON THE ADJACENT CONCRETE BARRIER RAIL SECTIONS.

✱ 19 mm CHAMFER ENTIRE OPENING (OR SUFFICIENTLY ROUNDED SO THAT A SMOOTH EDGE RESULTS.) 13 mm CHAMFER IS ACCEPTABLE.

ALL DIMENSIONS ARE MILLIMETERS (mm) UNLESS OTHERWISE NOTED.

DETAILED DRAWING	
REFERENCE STANDARD SPEC. SECTION 544, 606	DWG. NO. 606-66
CONCRETE BARRIER RAIL TRANSITION	
EFFECTIVE: FEBRUARY 2005	
serving you with pride	MONTANA DEPARTMENT OF TRANSPORTATION

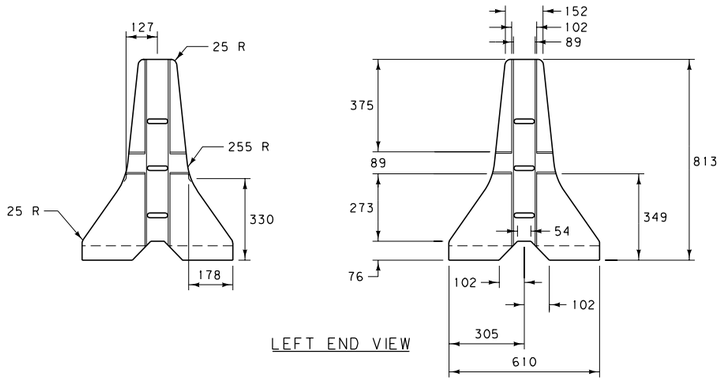

LEFT END VIEW

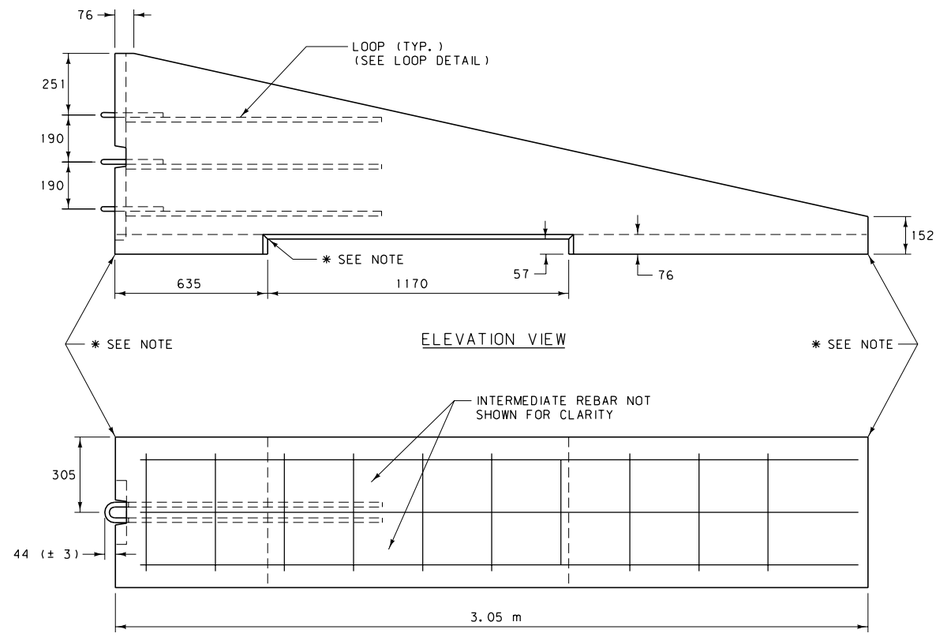

ELEVATION VIEW

PLAN VIEW

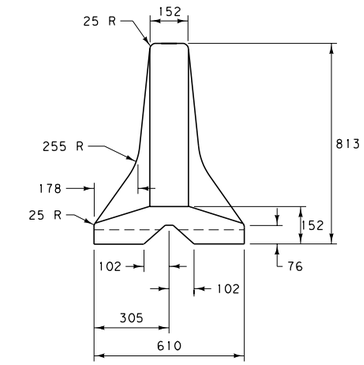

RIGHT END VIEW

NOTE:

REBAR TYPICAL AT LEFT END ONLY. TAPER THE REBAR HEIGHT AS NEEDED, BY MAINTAINING THE VERTICAL POSITION FROM THE BOTTOM AND THE 38 mm CLEARANCE AT ALL LOCATIONS.

NOTES:

1. USE CLASS "DD" CONCRETE OR EQUIVALENT.
2. REINFORCING STEEL CONSISTS OF DEFORMED BARS CONFORMING TO AASHTO M31M, GRADE 420.
3. CONNECT EACH 3.05 m SECTION WITH CONNECTING PINS AS DETAILED AND CONFORMING TO AASHTO M270M, GRADE 250 OR BETTER. CONNECTING PINS NEED NOT BE PAINTED.
4. CUTOUTS ON LEFT END OF EACH SECTION ARE SHOWN WITH SLIGHT TAPER TO FACILITATE FORM REMOVAL. RECTANGULAR CUTOUTS ARE ACCEPTABLE.
5. THE CONTRACTOR IS RESPONSIBLE FOR THE PROPER FIT-UP OF THE PRECAST CONCRETE BARRIER RAIL. ASSEMBLE AND PIN SUFFICIENT NUMBER OF PRECAST SECTIONS IN THE FABRICATIONS PLANT TO DETERMINE THAT PROPER FIT-UP CAN BE MAINTAINED ON ALL ROADWAY ALIGNMENT, CURVES AS WELL AS ON TANGENT. THIS IS TO BE DETERMINED EARLY IN FABRICATION.
6. SEE DTL. DWG. NO. 606-60 FOR INFORMATION ON THE ADJACENT CONCRETE BARRIER RAIL SECTION.

* 19 mm CHAMFER ENTIRE OPENING (OR SUFFICIENTLY ROUNDED SO THAT A SMOOTH EDGE RESULTS.) 13 mm CHAMFER IS ACCEPTABLE.

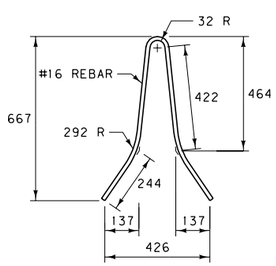

REBAR DETAIL LEFT END

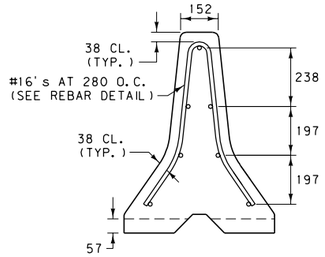

LEFT END VIEW

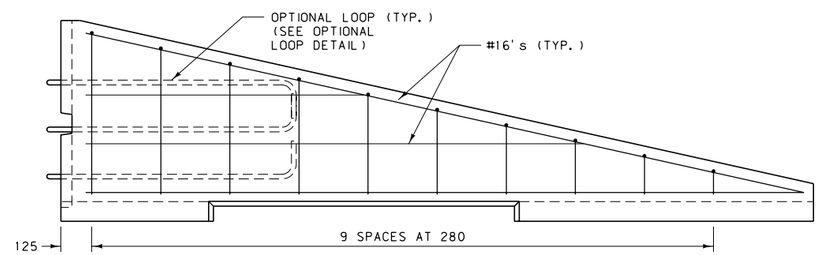

ELEVATION VIEW

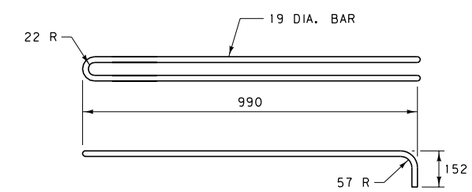

OPTIONAL LOOP DETAIL

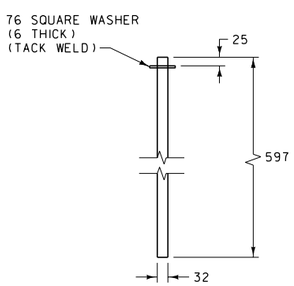

CONNECTING PIN DETAIL

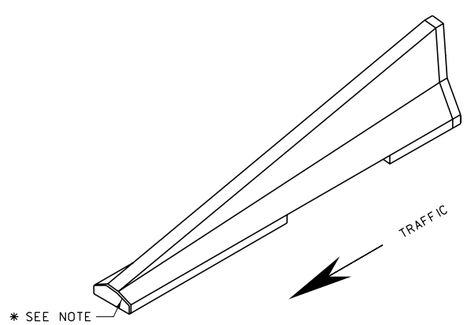

ISOMETRIC VIEW

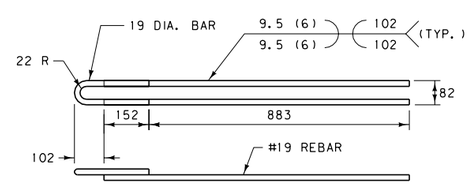

LOOP DETAIL

LOOP FABRICATION REQUIREMENTS:

1. USE REINFORCING STEEL CONFORMING TO ASTM A706M, GRADE 420 FOR REBAR BEING WELDED TO LOOPS.
2. LOOP ENDS CONSIST OF SMOOTH ROUND BARS CONFORMING TO AASHTO M270M, GRADE 250.
3. COLD BEND THE LOOPS BY USING A JIG THAT WILL PRODUCE AN ACCURATE RADIUS WITHOUT MARRING THE BAR. DO NOT HEAT THE BAR TO FACILITATE BENDING.
4. WELD REBAR TO LOOPS USING 3 mm DIA. E8018 ROD. DO NOT TACK WELD THE PIECES TOGETHER PRIOR TO WELDING.
5. USE A CERTIFIED WELDER IN ACCORDANCE WITH THE CURRENT EDITION OF AWS D1.4. DO NOT PLACE THE WELDED ASSEMBLY IN THE FORM UNTIL IT HAS BEEN INSPECTED.
6. NO ADDITIONAL WELDING IS PERMITTED ON THE SMOOTH ROUND BARS OR REINFORCING STEEL.

OPTIONAL LOOP FABRICATION REQUIREMENTS:

1. USE CONTINUOUS SMOOTH ROUND BARS CONFORMING TO AASHTO M270M, GRADE 250 TO FABRICATE THE OPTIONAL LOOPS.
2. COLD BEND THE LOOPS BY USING A JIG THAT WILL PRODUCE AN ACCURATE RADIUS WITHOUT MARRING THE BAR. DO NOT HEAT THE BAR TO FACILITATE BENDING.
3. NO WELDING IS PERMITTED ON THE SMOOTH ROUND BARS OR REINFORCING STEEL.

ALL DIMENSIONS ARE MILLIMETERS (mm) UNLESS OTHERWISE NOTED.

DETAILED DRAWING	
REFERENCE STANDARD SPEC. SECTION 554.606	DWG. NO. 606-68
CONCRETE BARRIER RAIL TERMINAL SECTION (ONE-WAY DEPARTURE)	
EFFECTIVE: FEBRUARY 2005	
serving you with pride	MONTANA DEPARTMENT OF TRANSPORTATION

SCHEDULE OF GUARDRAIL HARDWARE

DESIGNATION ①	DESCRIPTION	DTL. DWG. NO. (606-###)	GUARDRAIL TYPE ②
FBB01-05	M16 GUARDRAIL BOLT AND RECESS NUT	82	W
FBH01	M8 HOOK BOLT	92	C
FBH02	M8 ALTERNATE HOOK BOLT	92	C
FBX10a	M10 HEX BOLT	82	B
FBX12a	M12 HEX BOLT	82	B, C
FBX14a	M14 HEX BOLT	82	B
FBX16a	M16 HEX BOLT	82	W
FBX20a	M20 HEX BOLT	82	W
FBX20b	M20 HIGH STRENGTH HEX BOLT	82	B
FCA01	CABLE ASSEMBLY	84	W
FMM01	CABLE WEDGE	94	C
FMM02	POST SLEEVE	84	W
FNS20	M20 SQUARE NUT	82	C
FNX08a	M8 HEX NUT	82	C
FNX10a	M10 HEX NUT	82	B
FNX12a	M12 HEX NUT	82	B, C
FNX14a	M14 HEX NUT	82	B
FNX16a	M16 HEX NUT	82	W
FNX20a	M20 HEX NUT	82	C, W
FNX20b	M20 HIGH STRENGTH HEX NUT	82	B
FNX24a	M24 HEX NUT	82	W
FPA01	GUARDRAIL ANCHOR BRACKET & END PLATE	84	W
FPA02	CABLE ANCHOR BRACKET	95	C
FPB01	BEARING PLATE	18 & 46	W
FPP01	BOX BEAM SUPPORT BRACKET	97	B
FRH20a	M20 HOOKED ANCHOR ROD	82	C
FWC10a	M10 FLAT WASHER	82	B
FWC12a	M12 FLAT WASHER	82	B, C
FWC14a	M14 FLAT WASHER	82	B
FWC16a	M16 FLAT WASHER	82	W
FWC20a	M20 FLAT WASHER	82	C, W
FWC20b	M20 HARDENED FLAT WASHER	82	B
FWC24a	M24 FLAT WASHER	82	W
FWR03	RECTANGULAR PLATE WASHER	84	W
PDB01	WOOD BLOCKOUT	05A & 05B	W
PDE02	WOOD GUARDRAIL POST	05A	W
PDE09	CRT POST	46	W
PDF01	WOOD BREAKAWAY POST	46	W
PDF03	END POST	18	W
PLS01	SOIL PLATE	92 & 97	B, C
PLS03	SOIL PLATE	46	W
PSE01	CABLE GUARDRAIL LINE POST	92	C
PSE05	TYPE D BOX BEAM POST	97	B
PSE06	CABLE GUARDRAIL ANCHOR POST	95	C
PSE08	TYPE A BOX BEAM POST	97	B
PTE05	STEEL TUBE	46	W
PWE01	STEEL GUARDRAIL POST	05B	W
RBM01	BOX BEAM RAIL	98	B
RBM05	BOX BEAM TERMINAL RAIL	98	B
RBS01	BOX BEAM SPLICE PLATE	98	B
RCE01	COMPENSATING CABLE END ASSEMBLY	94	C
RCE03	CABLE END ASSEMBLY	94	C
RCM01	19.1 DIA. CABLE	94	C
RWE01a-b	W-BEAM END SECTION (FLARED)	88	W
RWE02a-b	W-BEAM TERMINAL CONNECTOR	88	W
RWE06a-b	W-BEAM END SECTION (BUFFER)	88	W
RWM02a-b	W-BEAM (3.81 m LENGTH)	88	W
RWM22a-b	W-BEAM (7.62 m LENGTH)	88	W
SEC01	CABLE GUARDRAIL TERMINAL ANCHOR ASSEMBLY	41	C

SCHEDULE OF GUARDRAIL HARDWARE

DESIGNATION ①	DESCRIPTION	DTL. DWG. NO. (606-###)	GUARDRAIL TYPE ②
N/A	TURNBUCKLE CABLE END ASSEMBLY	94	C
N/A	KEEPER PLATE	95	C
N/A	TYPE B BOX BEAM POST	97	B
N/A	TS152 x 152 x 4.8 BR. APP. SECT. UPPER RAIL NO. 1	98	B
N/A	TS152 x 51 x 6.4 BR. APP. SECT. LOWER RAIL NO. 1	98	B
N/A	TS152 x 51 x 6.4 BR. APP. SECT. LOWER RAIL NO. 2	98	B
N/A	TS152 x 51 TO TS152 x 152 CONNECTION SLEEVE	98	B
N/A	TS152 x 51 CONNECTION SLEEVE	98	B

NOTES:

① SEE AASHTO-AGC-ARTBA JOINT COMMITTEE TASK FORCE 13 REPORT "A GUIDE TO STANDARDIZED HIGHWAY BARRIER HARDWARE" PUBLICATION FOR ADDITIONAL AND DETAILED HARDWARE SPECIFICATIONS.

② GUARDRAIL TYPE CODES:

W = W-BEAM METAL GUARDRAIL
C = CABLE GUARDRAIL
B = BOX BEAM GUARDRAIL

ALL DIMENSIONS ARE MILLIMETERS (mm) UNLESS OTHERWISE NOTED.

DETAILED DRAWING

REFERENCE STANDARD SPEC. SECTION 606

DWG. NO. 606-80

SCHEDULE OF GUARDRAIL HARDWARE

EFFECTIVE: FEBRUARY 2005

MDT serving you with pride — MONTANA DEPARTMENT OF TRANSPORTATION

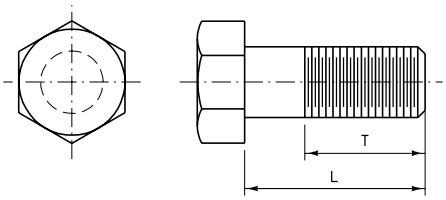

HEX BOLTS

BOLT SIZE	DESIGNATION *	L	T (MIN.)
REGULAR HEX BOLTS			
M10	FBX10a	89	38
M10	FBX10a	191	38
M12	FBX12a	38	FULL
M12	FBX12a	63	44
M14	FBX14a	203	51
M16	FBX16a	38	FULL
M20	FBX20a	203	51
M20	FBX20a	241	51
HIGH STRENGTH HEX BOLTS			
M20	FBX20b	51	38
M20	FBX20b	102	51
M20	FBX20b	203	51

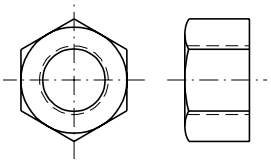

HEX NUT

NUT SIZE	DESIGNATION *
REGULAR HEX NUTS	
M8	FNX08a
M10	FNX10a
M12	FNX12a
M14	FNX14a
M16	FNX16a
M20	FNX20a
M24	FNX24a
HIGH STRENGTH HEX NUTS	
M20	FNX20b

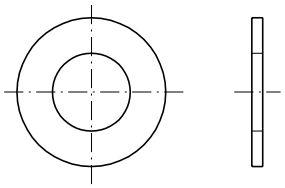

FLAT WASHERS

WASHER SIZE	DESIGNATION *
REGULAR FLAT WASHERS	
M10	FWC10a
M12	FWC12a
M14	FWC14a
M16	FWC16a
M20	FWC20a
M24	FWC24a
HARDENED FLAT WASHERS	
M20	FWC20b

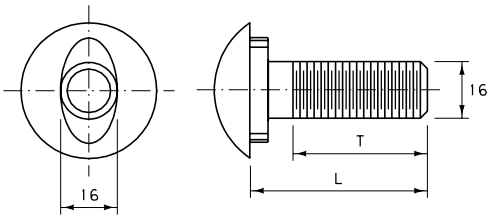

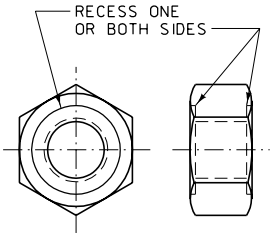

DESIGNATION *	L	T (MIN.)
FBB01	31	FULL
FBB02	51	38
FBB03	254	44
FBB04	457	63
FBB05	635	51

M16 GUARDRAIL BOLT & RECESS NUT

FBB01-05*

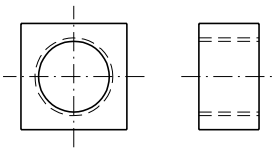

M20 SQUARE NUT

FNS20*

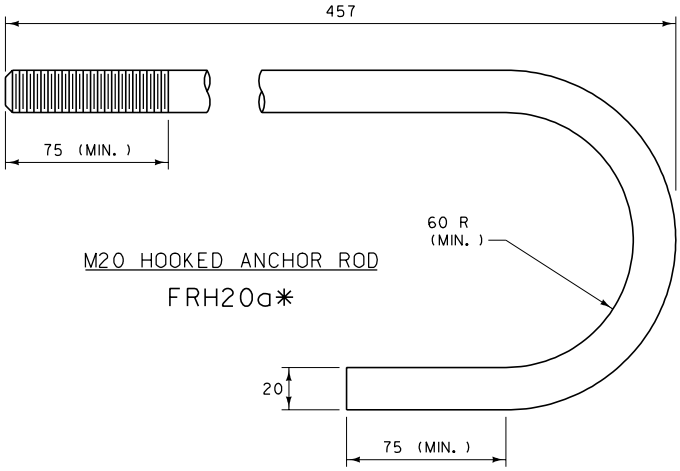

M20 HOOKED ANCHOR ROD

FRH20a*

NOTES:

1. BOLTS AND ANCHOR RODS ARE TO CONFORM TO THE REQUIREMENTS OF ASTM F568M CLASS 4.6. NUTS ARE TO CONFORM TO THE REQUIREMENTS OF AASHTO M291M (ASTM A563M) CLASS 5. USE STEEL WASHERS.

2. HIGH STRENGTH BOLTS ARE TO CONFORM TO THE REQUIREMENTS OF AASHTO M164M (ASTM A325M) TYPE 1. HIGH STRENGTH NUTS ARE TO CONFORM TO THE REQUIREMENTS OF AASHTO M291M (ASTM A563M) CLASS 10S. HARDENED WASHERS ARE TO CONFORM TO THE REQUIREMENTS OF AASHTO M293M (ASTM F436M).

3. GALVANIZE BOLTS, NUTS AND WASHERS IN ACCORDANCE WITH AASHTO M232M (ASTM A153M). NO PUNCHING, DRILLING OR CUTTING IS PERMITTED AFTER GALVANIZING.

* SEE DTL. DWG. NO. 606-80 FOR SCHEDULE OF GUARDRAIL HARDWARE.

ALL DIMENSIONS ARE MILLIMETERS (mm) UNLESS OTHERWISE NOTED.

DETAILED DRAWING

REFERENCE STANDARD SPEC. SECTION 606

DWG. NO. 606-82

GUARDRAIL HARDWARE

EFFECTIVE: FEBRUARY 2005

serving you with pride

MONTANA DEPARTMENT OF TRANSPORTATION

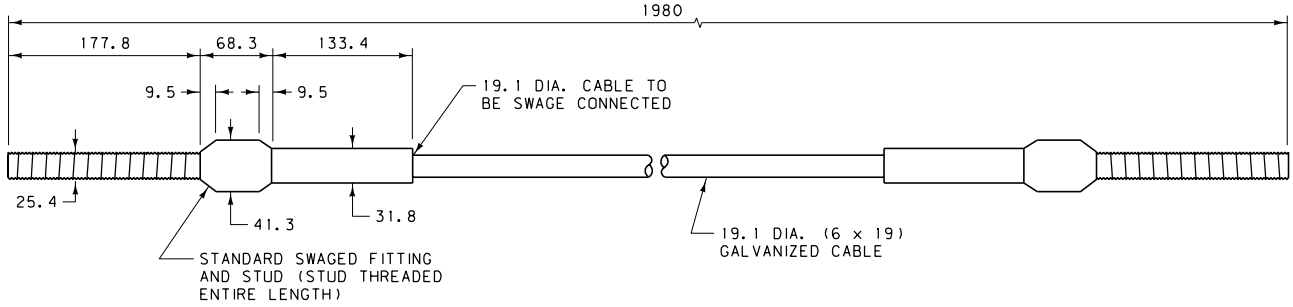

NOTES:

① FOR RELATED FASTENER HARDWARE SEE FWC24a*, FNX24a* AND FPA01*.

② MACHINE THE SWAGED FITTING FROM HOT-ROLLED CARBON STEEL. CONFORMING TO THE REQUIREMENTS OF ASTM A576M, GRADE 1035, AND ANNEAL SUITABLE FOR COLD SWAGING. GALVANIZE THE SWAGED FITTING IN ACCORDANCE WITH AASHTO M111M (ASTM A123M) BEFORE SWAGING. DRILL A LOCK PIN HOLE TO ACCOMMODATE A 6.4 mm, PLATED SPRING STEEL PIN THROUGH THE HEAD OF THE SWAGED FITTING TO RETAIN THE STUD IN THE PROPER POSITION.

③ THE STUD IS TO CONFORM TO THE REQUIREMENTS OF ASTM F568M CLASS 8.8 AND BE GALVANIZED IN ACCORDANCE WITH AASHTO M232M (ASTM A153M). PRIOR TO GALVANIZING, MILL A 9.5 mm SLOT INTO THE STUD END FOR THE LOCKING PIN.

④ WIRE ROPE IS TO CONFORM TO THE REQUIREMENTS OF AASHTO M30M AND BE 19.1 mm PREFORMED, 6 x 19, WIRE STRAND CORE OR INDEPENDENT WIRE ROPE CORE (IWRC), GALVANIZED, RIGHT REGULAR LAY, MANUFACTURED OF IMPROVED PLOW STEEL WITH A MINIMUM BREAKING STRENGTH OF 190.4 kN.

⑤ THE SWAGED FITTING, STUD AND NUT (FNX24a*) MUST DEVELOP THE BREAKING STRENGTH OF THE WIRE ROPE.

CABLE ASSEMBLY

FCA01*

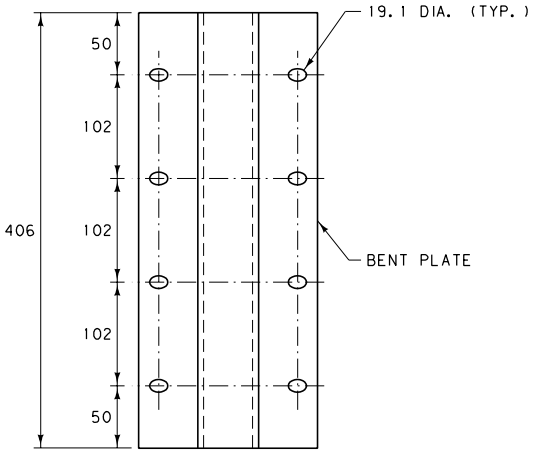

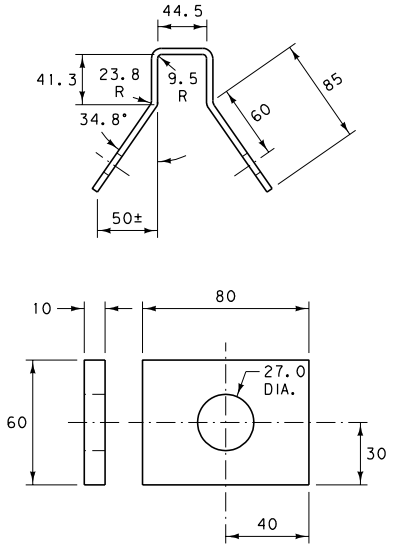

ANCHOR BRACKET & END PLATE

FPA01*

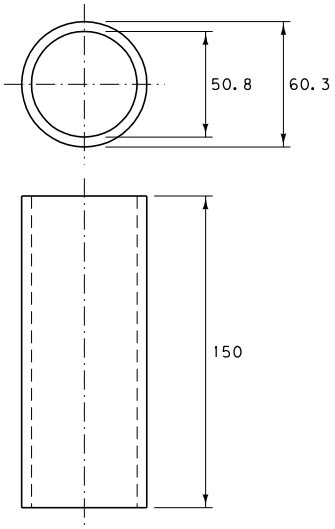

POST SLEEVE

FMM02*

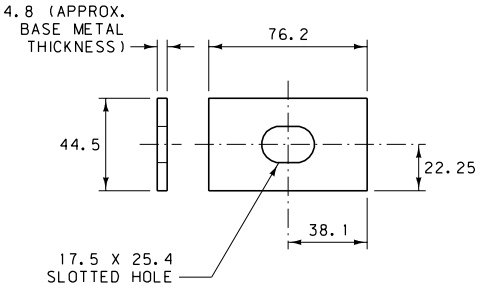

RECTANGULAR PLATE WASHER

FWR03*

NOTES:

⑥ ANCHOR BRACKETS, END PLATES AND RECTANGULAR PLATE WASHERS ARE TO CONFORM TO THE REQUIREMENTS OF AASHTO M270M (ASTM A709M) GRADE 250 STEEL PLATE. POST SLEEVES ARE TO CONFORM TO THE REQUIREMENTS OF ASTM A53M GRADE B.

⑦ GALVANIZE FABRICATED PARTS IN ACCORDANCE WITH AASHTO M111M (ASTM A123M). NO PUNCHING, DRILLING OR CUTTING IS PERMITTED AFTER GALVANIZING.

* SEE DTL. DWG. NO. 606-80 FOR SCHEDULE OF GUARDRAIL HARDWARE.

ALL DIMENSIONS ARE MILLIMETERS (mm) UNLESS OTHERWISE NOTED.

DETAILED DRAWING	
REFERENCE STANDARD SPEC. SECTION 606	DWG. NO. 606-84
W-BEAM METAL GUARDRAIL HARDWARE	
EFFECTIVE: FEBRUARY 2005	

serving you with pride — MONTANA DEPARTMENT OF TRANSPORTATION

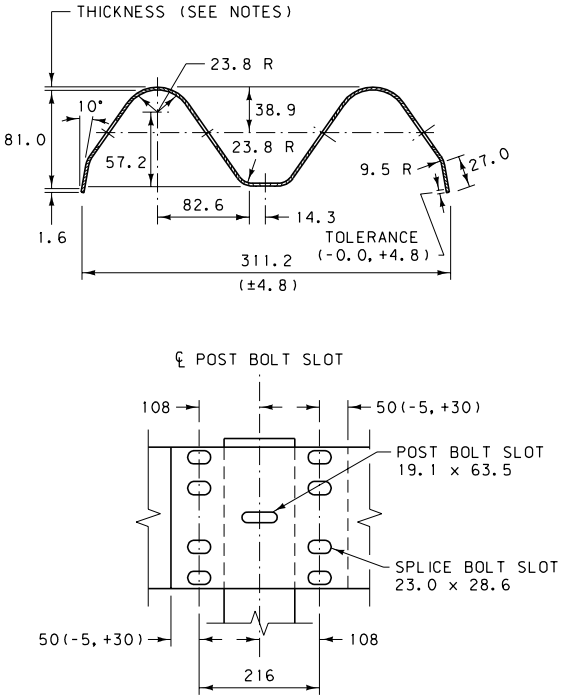

W-BEAM

RWM02a-b* (3.81 m LENGTH) OR RWM22a-b* (7.62 m LENGTH)

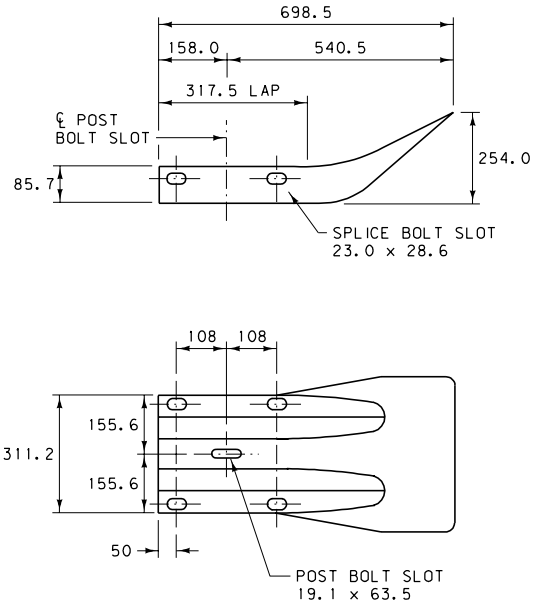

W-BEAM END SECTION (FLARED)

RWE01a-b*

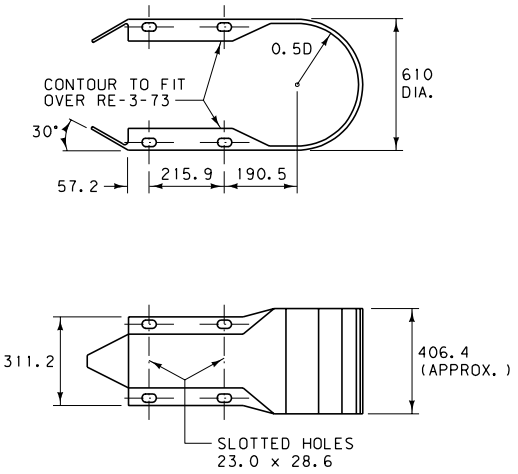

W-BEAM END SECTION (BUFFER)

RWE06a-b*

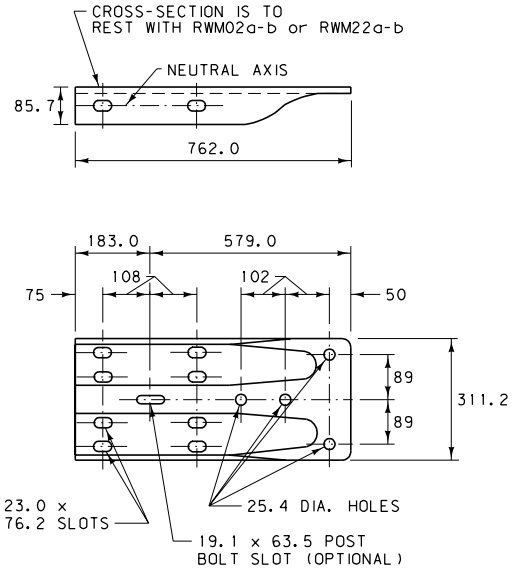

W-BEAM TERMINAL CONNECTOR

RWE02a-b*

NOTES:

* DESTINATION SUFFIX	METAL THICKNESS
a	12 GAGE (2.7 mm)
b	10 GAGE (3.5 mm)

* SEE DTL. DWG. NO. 606-80 FOR SCHEDULE OF GUARDRAIL HARDWARE.

ALL DIMENSIONS ARE MILLIMETERS (mm) UNLESS OTHERWISE NOTED.

DETAILED DRAWING

REFERENCE STANDARD SPEC. SECTION 606

DWG. NO. 606-88

W-BEAM METAL GUARDRAIL HARDWARE

EFFECTIVE: FEBRUARY 2005

MDT serving you with pride — MONTANA DEPARTMENT OF TRANSPORTATION

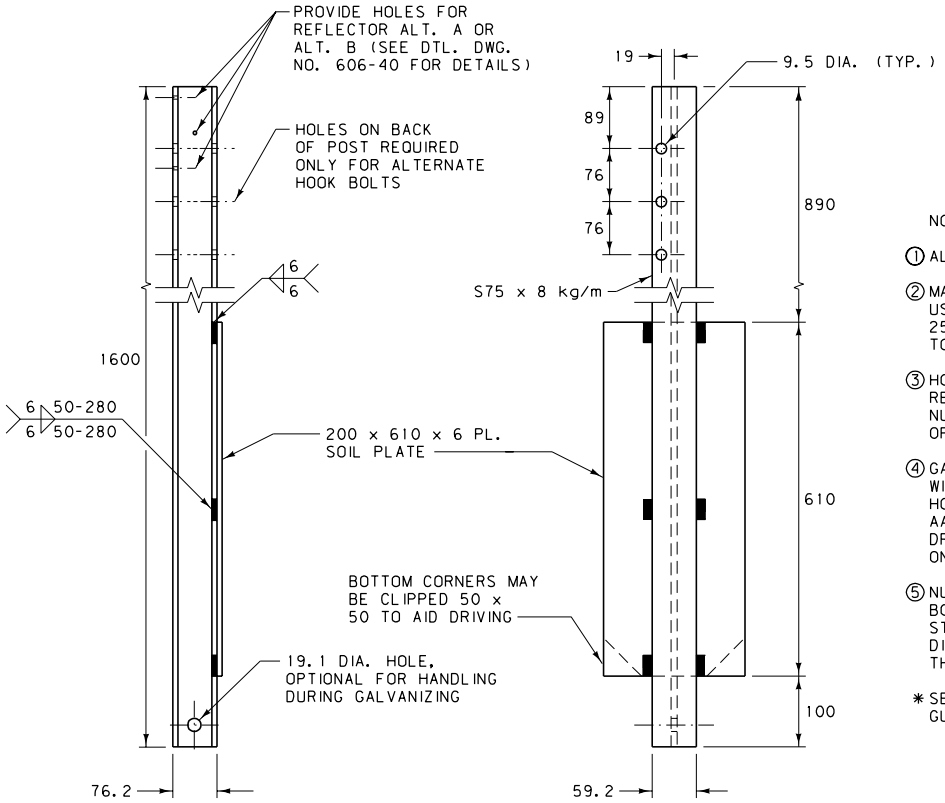

NOTES:

1. ALL HOLES ARE 9.5 mm EXCEPT AS NOTED.
2. MANUFACTURE POSTS AND SOIL PLATES USING AASHTO M270M (ASTM A709M) GRADE 250 STEEL. ALL WELDING IS TO CONFORM TO THE APPLICABLE AWS CODE.
3. HOOK BOLTS ARE TO CONFORM TO THE REQUIREMENTS OF ASTM 568M CLASS 4.6. NUTS ARE TO CONFORM TO THE REQUIREMENTS OF AASHTO M291M (ASTM A563M) CLASS 5.
4. GALVANIZE FABRICATED PARTS IN ACCORDANCE WITH AASHTO M111M (ASTM A123M). GALVANIZE HOOK BOLTS AND NUTS IN ACCORDANCE WITH AASHTO M232M (ASTM A153M). NO PUNCHING, DRILLING, WELDING OR CUTTING IS PERMITTED ON COMPONENTS AFTER GALVANIZING.
5. NUTS ARE OF THE HEAVY HEX TYPES. INSTALL BOLTS TO DEVELOP AN ULTIMATE PULL OPEN STRENGTH FROM 2225 N TO 4450 N APPLIED IN A DIRECTION NORMAL TO THE LONGITUDINAL AXIS OF THE POST.

* SEE DTL. DWG. NO. 606-80 FOR SCHEDULE OF GUARDRAIL HARDWARE.

CABLE GUARDRAIL POST AND SOIL PLATE

PSE01* AND PLS01*

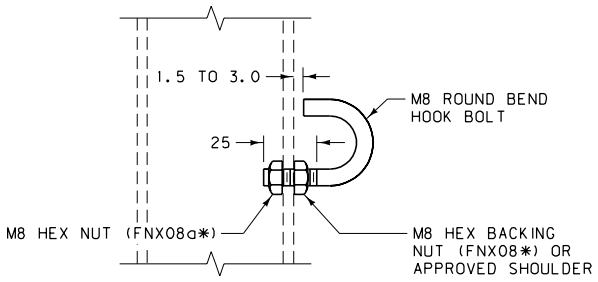

M8 HOOK BOLT

FBH01*

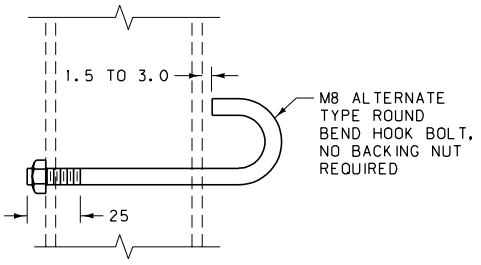

ALTERNATE M8 HOOK BOLT

FBH02*

ALL DIMENSIONS ARE MILLIMETERS (mm) UNLESS OTHERWISE NOTED.

DETAILED DRAWING	
REFERENCE STANDARD SPEC. SECTION 606	DWG. NO. 606-92
CABLE GUARDRAIL HARDWARE	
EFFECTIVE: FEBRUARY 2005	

serving you with pride — MONTANA DEPARTMENT OF TRANSPORTATION

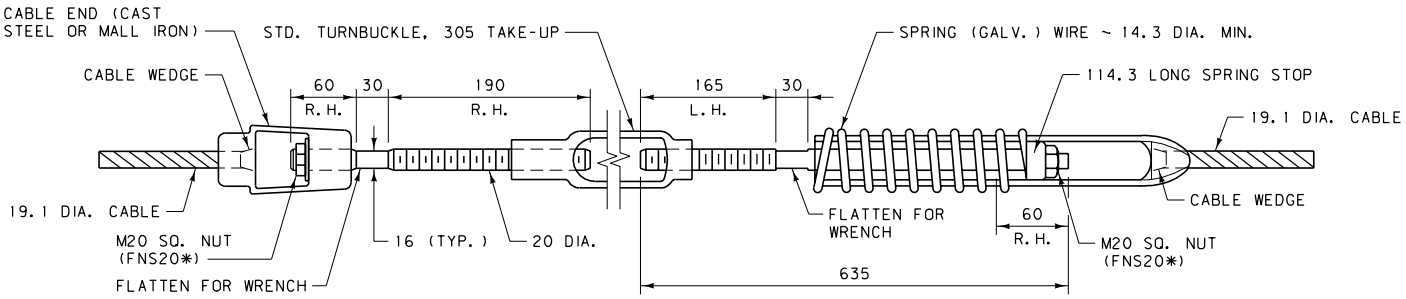

COMPENSATING CABLE END ASSEMBLY

RCE01*

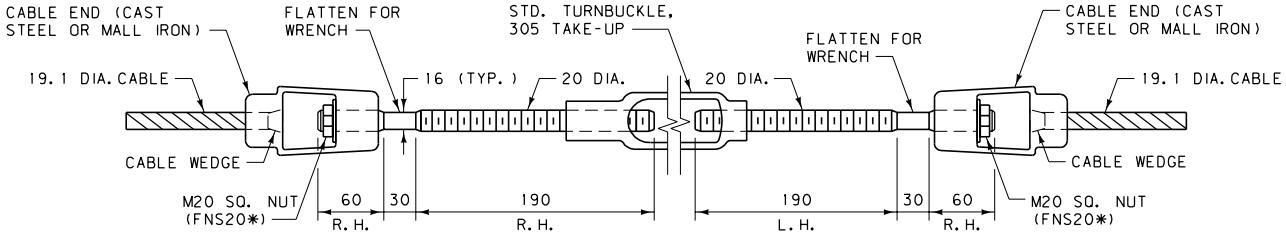

TURNBUCKLE CABLE END ASSEMBLY

R.H. = RIGHT HAND
L.H. = LEFT HAND

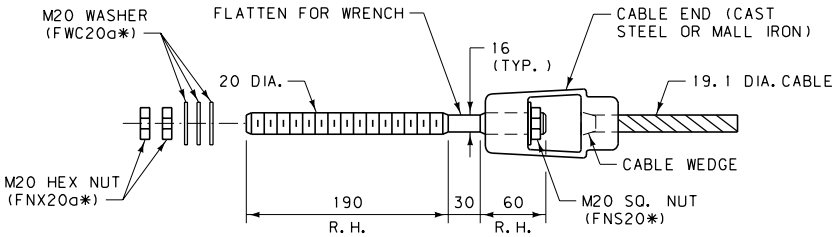

CABLE END ASSEMBLY

RCE03*

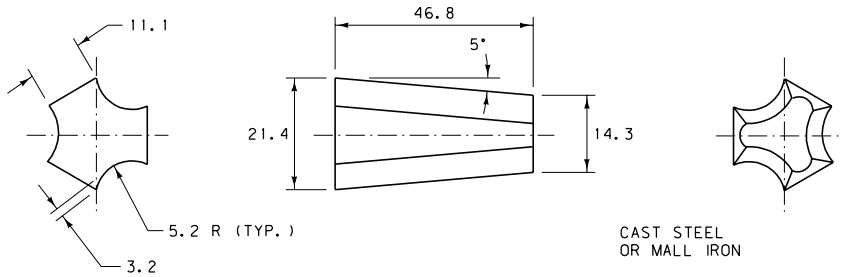

CABLE WEDGE

FMM01*

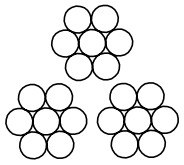

19.1 DIA. - 3 x 7 WIRE ROPE

19.1 DIA. CABLE

RCM01*

NOTES:

1. WIRE ROPE AND CONNECTING HARDWARE ARE TO CONFORM TO THE REQUIREMENTS OF AASHTO M30M TYPE 1 CLASS A, 19.1 mm ROPE. CONNECTING HARDWARE MUST DEVELOP THE FULL STRENGTH OF A SINGLE CABLE (111.2 kN). CAST STEEL COMPONENTS ARE TO CONFORM TO THE REQUIREMENTS OF AASHTO M103M (ASTM A27M). MALLEABLE IRON CASTINGS ARE TO CONFORM TO THE REQUIREMENTS OF ASTM A47M.
2. AT ALL LOCATIONS WHERE THE CABLE IS CONNECTED TO A CABLE SOCKET WITH A WEDGE TYPE CONNECTION, CRIMP ONE WIRE OF THE CABLE OVER THE BASE OF THE WEDGE TO HOLD IT FIRMLY IN PLACE.
3. COMPENSATING DEVICES ARE TO HAVE SPRING CONSTANTS OF 78.8 N/mm, PLUS OR MINUS 8.8 N/mm, AND PERMIT A TRAVEL OF 150 mm PLUS OR MINUS 25 mm.
4. DESIGN SOCKET BASKETS FOR USE WITH THE WEDGE DETAILED IN THIS DRAWING.
5. ALTERNATE HARDWARE DESIGNS WILL BE CONSIDERED FOR APPROVAL PROVIDED THEIR CONNECTION DETAILS, FOR THE PURPOSE OF MAINTENANCE SUBSTITUTIONS, ARE COMPATIBLE WITH THE DETAILS OF THIS DRAWING AND THEIR OPERATING CHARACTERISTICS ARE SIMILAR TO THOSE OF THE HARDWARE IN THIS DRAWING.

* SEE DTL. DWG. NO. 606-80 FOR SCHEDULE OF GUARDRAIL HARDWARE.

ALL DIMENSIONS ARE MILLIMETERS (mm) UNLESS OTHERWISE NOTED.

DETAILED DRAWING	
REFERENCE STANDARD SPEC. SECTION 606	DWG. NO. 606-94
CABLE GUARDRAIL HARDWARE	
EFFECTIVE: FEBRUARY 2005	

MDT serving you with pride — MONTANA DEPARTMENT OF TRANSPORTATION

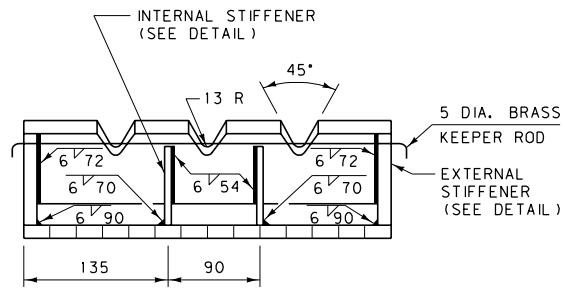

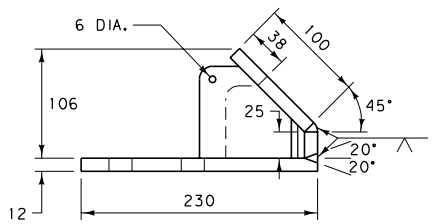

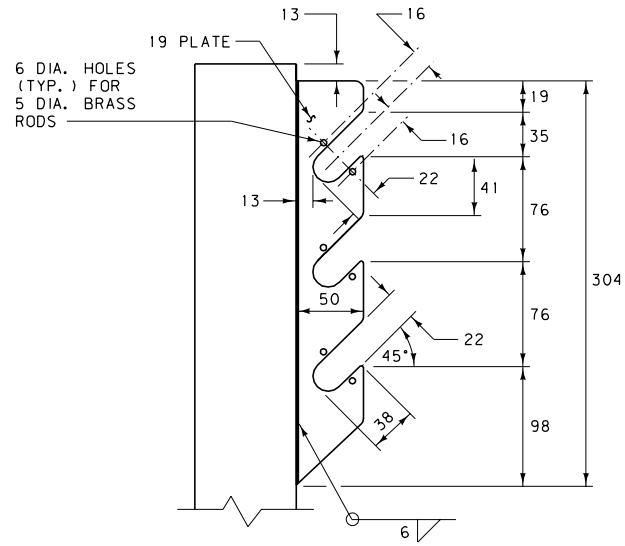

CABLE SUPPORT DETAIL

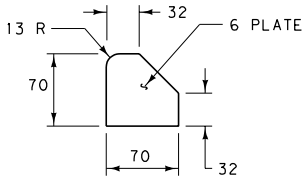

INTERNAL STIFFENER

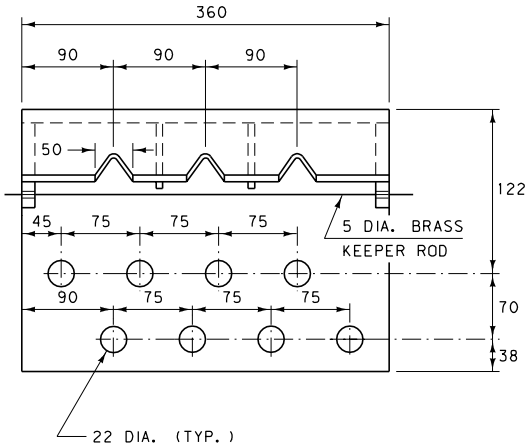

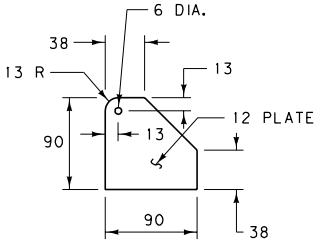

EXTERNAL STIFFENER

CABLE ANCHOR BRACKET

FPA02*

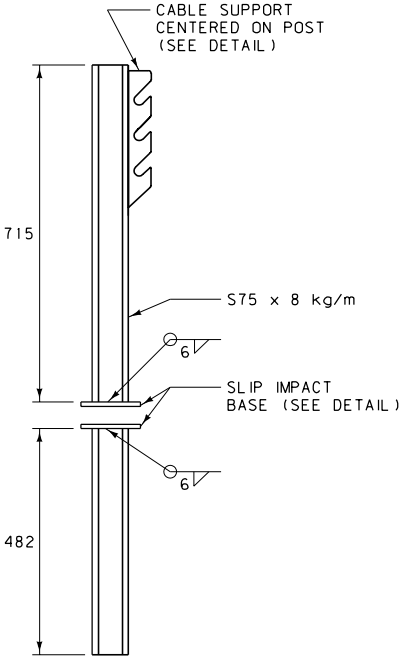

NOTES:

1. MANUFACTURE ANCHOR POSTS AND BRACKETS USING AASHTO M270M (ASTM A709M) GRADE 250 STEEL. ALL WELDING IS TO CONFORM TO THE APPLICABLE AWS CODE.

2. GALVANIZE FABRICATED PARTS IN ACCORDANCE WITH AASHTO M111M (ASTM A123M). NO PUNCHING, DRILLING, WELDING OR CUTTING IS PERMITTED ON COMPONENTS AFTER GALVANIZING.

* SEE DTL. DWG. NO. 606-80 FOR SCHEDULE OF GUARDRAIL HARDWARE.

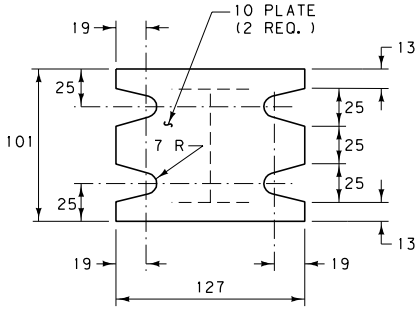

SLIP IMPACT BASE

(KEEPER PLATE NOT SHOWN)

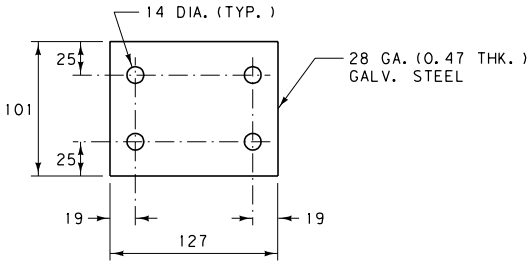

KEEPER PLATE

CABLE GUARDRAIL ANCHOR POST

PSE06*

ALL DIMENSIONS ARE MILLIMETERS (mm) UNLESS OTHERWISE NOTED.

DETAILED DRAWING	
REFERENCE STANDARD SPEC. SECTION 606	DWG. NO. 606-95
CABLE GUARDRAIL HARDWARE	
EFFECTIVE: FEBRUARY 2005	

MDT serving you with pride — MONTANA DEPARTMENT OF TRANSPORTATION

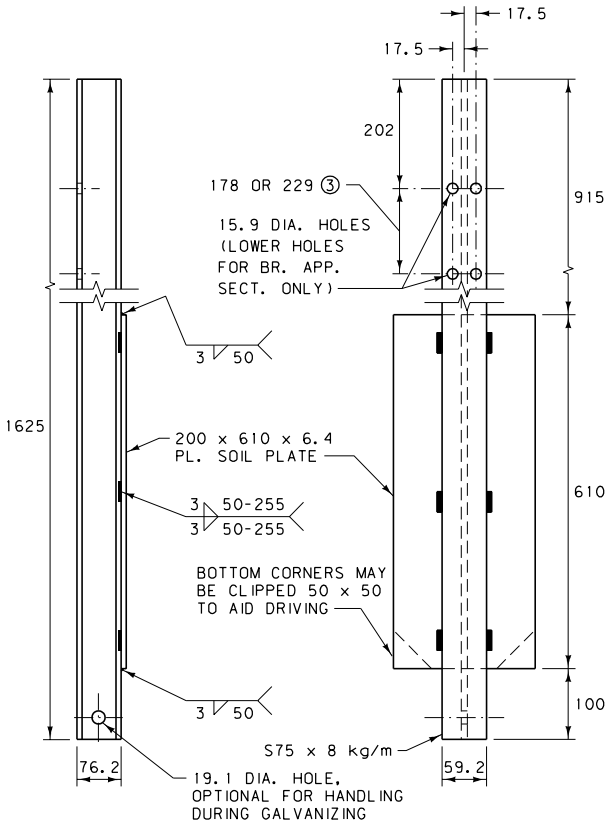

TYPE A BOX BEAM POST AND SOIL PLATE

PSE08* AND PLS01*

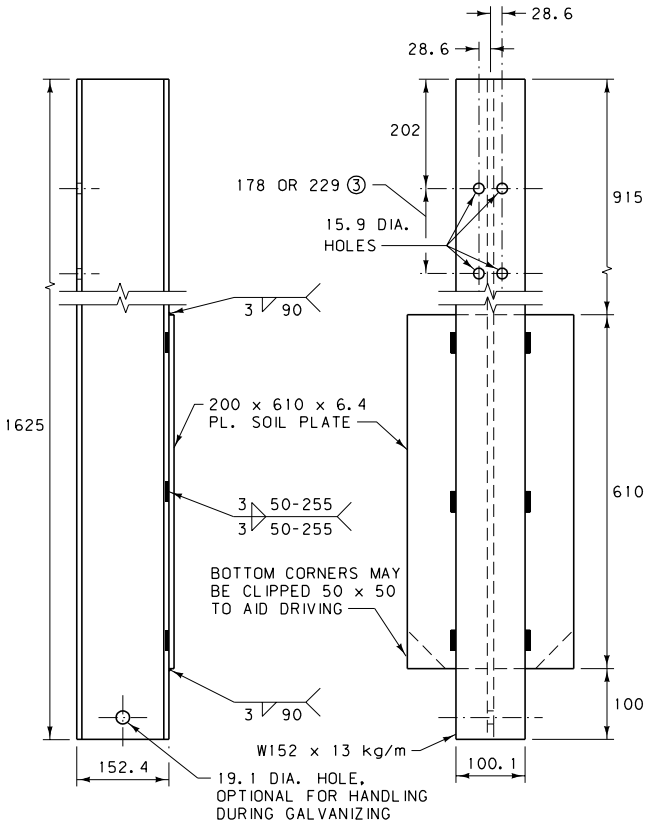

TYPE B BOX BEAM POST AND SOIL PLATE

PLS01*

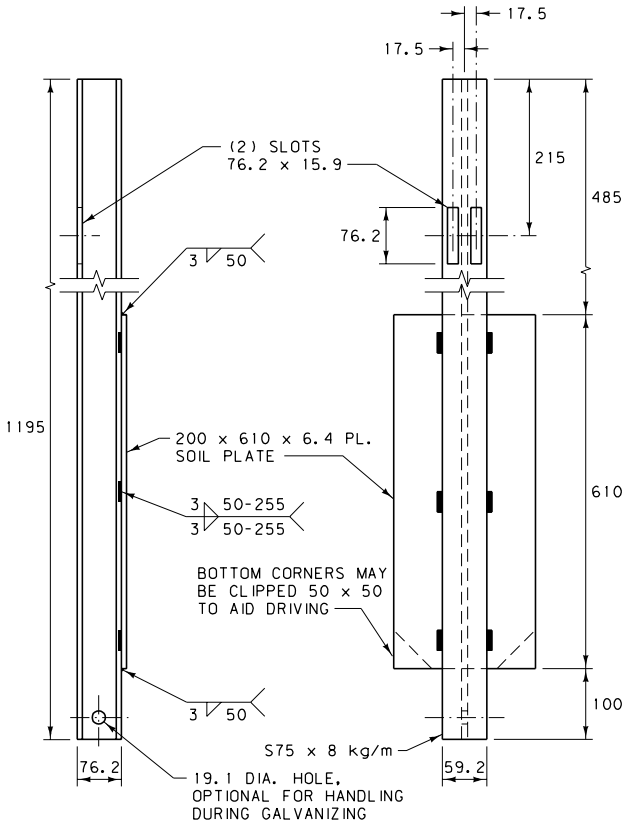

TYPE D BOX BEAM POST AND SOIL PLATE

PSE05* AND PLS01*

NOTES:

① MANUFACTURE POSTS, SOIL PLATES AND SUPPORT BRACKETS USING AASHTO M270M, GRADE 250 STEEL. ALL WELDING IS TO CONFORM TO THE APPLICABLE AWS CODE.

② GALVANIZE FABRICATED POSTS AND BRACKETS IN ACCORDANCE WITH AASHTO M111M. NO PUNCHING, DRILLING, WELDING OR CUTTING IS PERMITTED ON COMPONENTS AFTER GALVANIZING.

③ SEE DTL. DWG. NO. 606-53 (BOX BEAM BR. APP. SECT.) FOR REQUIRED LOCATION OF LOWER HOLES IN TYPE A AND B POSTS.

* SEE DTL. DWG. NO. 606-80 FOR SCHEDULE OF GUARDRAIL HARDWARE.

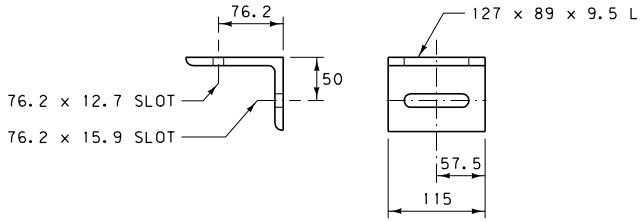

BOX BEAM SUPPORT BRACKET

FPP01*

ALL DIMENSIONS ARE MILLIMETERS (mm) UNLESS OTHERWISE NOTED.

DETAILED DRAWING	
REFERENCE STANDARD SPEC. SECTION 606	DWG. NO. 606-97
BOX BEAM GUARDRAIL HARDWARE	
EFFECTIVE: FEBRUARY 2005	

MDT serving you with pride — MONTANA DEPARTMENT OF TRANSPORTATION

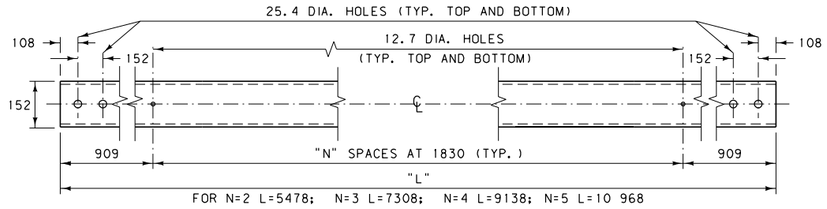

BOX BEAM RAIL (TS152 x 152 x 4.8)

RBM01*

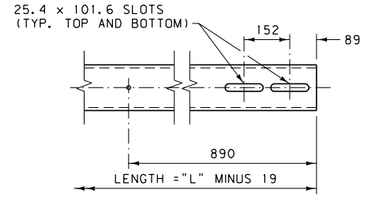

BOX BEAM EXPANSION SPLICE END

ONE END OF BOX BEAM RAIL ONLY. REQUIRED FOR BOTH RAILS AT THE EXPANSION SPLICE.

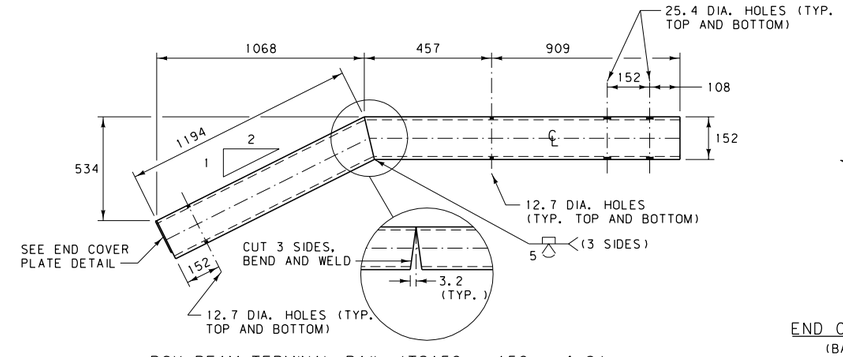

BOX BEAM TERMINAL RAIL (TS152 x 152 x 4.8)

RBM05*

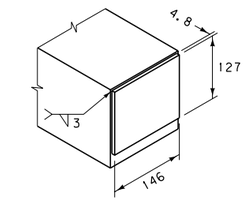

END COVER PLATE DETAIL

(BAR 127 x 4.8 x 146)

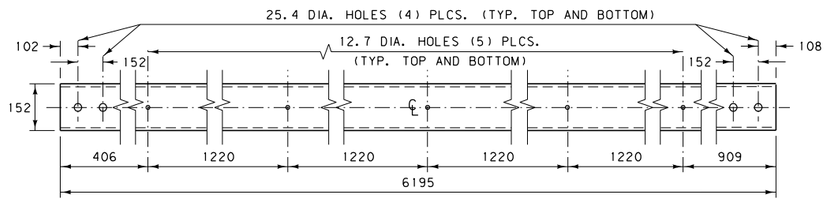

TS152 x 152 x 4.8 BR. APP. SECT. UPPER RAIL NO. 1

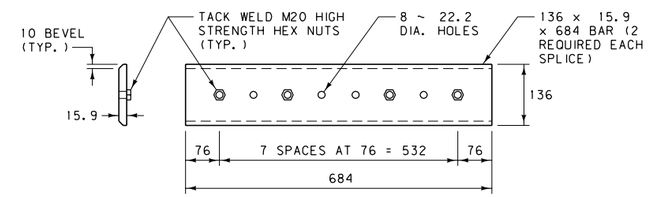

BOX BEAM SPLICE PLATE

RBS01*

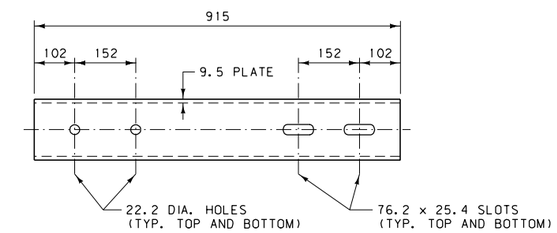

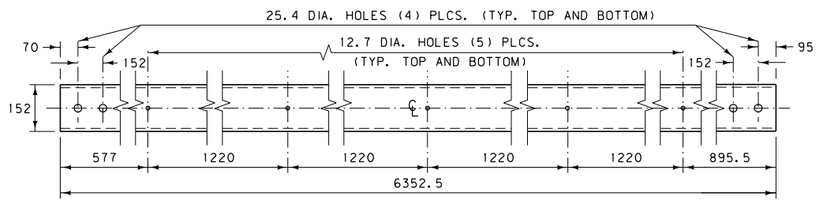

TS152 x 51 x 6.4 BR. APP. SECT. LOWER RAIL NO. 1

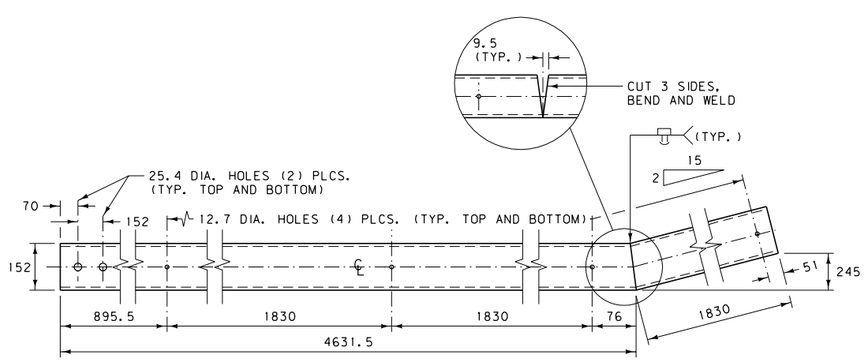

TS152 x 51 x 6.4 BR. APP. SECT. LOWER RAIL NO. 2

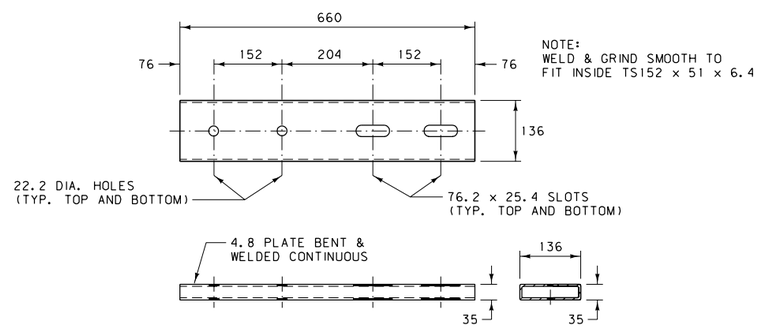

TS152 x 51 CONNECTION SLEEVE

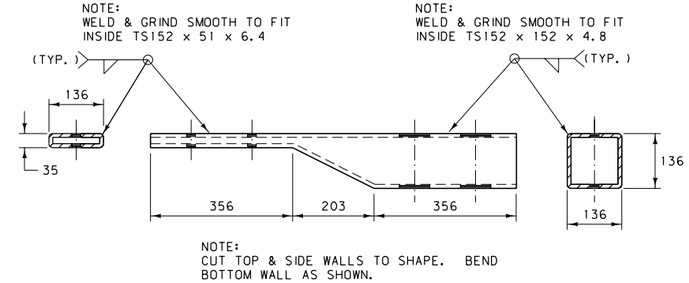

TS152 x 51 TO TS152 x 152 CONNECTION SLEEVE

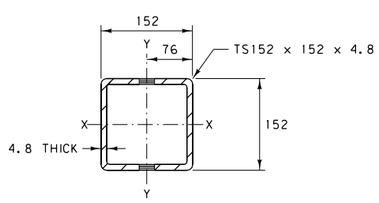

TS152 x 152 x 4.8 SECTION VIEW

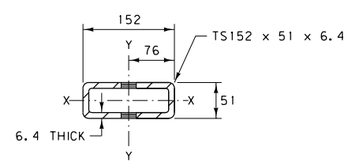

TS152 x 51 x 6.4 SECTION VIEW

NOTES:

1. MANUFACTURE BOX BEAM RAIL ELEMENTS FROM EITHER ASTM A500M GRADE B COLD ROLLED TUBING, ASTM A501M HOT-ROLLED TUBING OR AUTOMOTIVE ROLLOVER PROTECTIVE STEEL (ROPS). WHEN ASTM A500M GRADE B STEEL IS USED, TEST THE MATERIAL PER ASTM E436M.
2. FABRICATE SPLICE PLATES AND CONNECTION SLEEVES FROM AASHTO M270M GRADE 250 STEEL PLATE. THE NUTS ARE TO BE PLAIN UN-COATED M20 HIGH STRENGTH HEX NUTS. WELD THE NUTS TO THE PLATES IN ACCORDANCE WITH THE APPLICABLE AWS CODE.
3. GALVANIZE FABRICATED RAIL, CONNECTION SLEEVES, AND SPLICE PLATES IN ACCORDANCE WITH AASHTO M111M. NO PUNCHING, DRILLING, WELDING OR CUTTING IS PERMITTED ON COMPONENTS AFTER GALVANIZING.

* SEE DTL. DWG. NO. 606-80 FOR SCHEDULE OF GUARDRAIL HARDWARE.

ALL DIMENSIONS ARE MILLIMETERS (mm) UNLESS OTHERWISE NOTED.

DETAILED DRAWING	
REFERENCE STANDARD SPEC. SECTION 606	DWG. NO. 606-98
BOX BEAM GUARDRAIL HARDWARE	
EFFECTIVE: FEBRUARY 2005	
serving you with pride	MONTANA DEPARTMENT OF TRANSPORTATION