Chapter Twenty-Three

PRELIMINARY PLAN PREPARATION (Activity 806)

MONTANA RIGHT-OF-WAY
DESIGN MANUAL

Space holder page for double-sided printing

Revised: 1/17/17

Chapter Twenty-Three
PRELIMINARY PLAN PREPARATION (Activity 806)

Table of Contents

Section **Page**

23-1 BACKGROUND, HISTORY AND ROAD LAWS 1

23-1.1 Montana Road Laws & Methods of Creating Public Roads 2
23-1.2 Easement vs. Fee Interest 6

23-2 SECTION LINES 7

23-2.1 Geopak 7
23-2.2 Placing Section Lines 7
23-2.2.1 Exterior Section Lines – Found vs. Unfound Corners 7
23-2.2.2 Interior Section Lines 8
23-2.3 Section Corner Ties 10
23-2.4 Section Information Identified on the Plans 11

23-3 EXISTING R/W AND/OR EASEMENT (Activity 818) 12

23-3.1 Geopak 12
23-3.2 Placing Existing Highway R/W Lines 12
23-3.2.1 Retraced Lines 13
23-3.2.2 Non-Retraced Lines 14
23-3.3 Identification of Existing Highway R/W on the Plans 17
23-3.4 Placing Existing Railroad R/W 18
23-3.5 Placing Existing County Road Easement Lines 19
23-3.6 Identification of Existing County Easements on the Plans 20

23-4 PROPERTY IDENTIFICATION 21

23-4.1 Placing Property Lines 21
23-4.1.1 Legal Descriptions 21
23-4.1.2 Certificates of Survey or Plats 24
23-4.2 Identification of Ownerships and Boundaries on the Plans 24
23-4.2.1 Ownership Dots 24
23-4.2.2 COS/Plat Information 25
23-4.2.3 Parcelization 25
23-4.3 Property Identification and the Ownership Sheet 29
23-4.3.1 Owner Names 30

Revised: 1/17/17

23-4.3.2 Areas 31
23-4.3.3 Owner Notification vs. Negotiations Only 31

23-5 TITLE COMMITMENTS (ACTIVITY 808) 33

23-5.1 Title Commitment Contents 34
23-5.2 Ordering Title Commitments 34
23-5.3 Reviewing Completed Title Commitments 35

23-6 PRELIMINARY R/W DESIGN 37

23-6.1 Preparing for R/W Design 37
23-6.2 Designing New R/W 38
23-6.2.1 Standard R/W Widths 39
23-6.2.2 Right-of-Way Break Guidelines 42
23-6.3 Easement Design 44
23-6.4 Construction Permits 44
23-6.5 Wetlands 45
23-6.6 Geopak 45
23-6.7 R/W, Easement, and Construction Permit Callouts 46
23-6.7.1 New R/W Callouts 46
23-6.7.2 New Easement/Construction Permit Calls & Dimensions 47

23-7 ACCESS CONTROL 50

23-7.1 Access Control Limits 51
23-7.2 Approaches, Access Roads and Frontage Roads 51
23-7.2.1 Approach Frame 52
23-7.3 Access Control Involvement 52

23-8 R/W PLAN SPECIAL REQUIREMENTS 54

23-8.1 DNRC State of Montana 54
23-8.2 United States of America (BLM, BOR & U.S. Forest Service) 54
23-8.3 Railroad 54
23-8.4 MDT Maintenance Sites 56

Chapter Twenty-Three
PRELIMINARY PLAN PREPARATION (ACTIVITY 806)

Upon completion of the preliminary plan activity, notification must be sent to Road Design, DESS, and Project Manager by email or memo. Utilities must also be sent a completed set of preliminary R/W plans with a memo requesting their review for utility conflicts with the proposed R/W as designed.

23-1 BACKGROUND, HISTORY AND ROAD LAWS

"Right-of-way plans are the paper drawings which show the project alignment, its centerline, existing and proposed Right-of-Way, construction limits, terrain features, property lines, property and other principal above ground improvements among other things. . . Right-of-way plans should contain all of the information necessary for the acquisition of the required right-of way that is found on the design plans plus any additional information that will be used in the acquisition process."[1]

Whenever the Department establishes the location, width and lines of any new, reconstructed or proposed highway or the Commission designates a road, street or highway as a controlled-access facility, the Department will make a description and plan showing the line and the established width; the immediate boundary lines of all property over, across or through which the highway passes; the name of the owner of the property; the boundaries of that part of the private ownership included within the Right-of-Way of the highway; and the parcel number assigned to that part of each ownership included within the highway Right-of-Way, together with the project number under which the highway is or is proposed to be constructed or reconstructed.

Reference to the project number, parcel number, and section or quarter section, tract, block or lot from which the same has been subdivided is a valid description of the parcel in all deeds given to or received from the State in which a parcel is transferred (MCA 60-2-209).

The Montana Department of Transportation is exempt from the Subdivision and Platting Act; it is not exempt from the responsibility of providing accurate maps for the transfer of land.

---

[1] U.S. Department of Transportation, Federal Highway Administration, Office of Right-of-Way, ***Right-of-Way Project Development Guide***, (Washington, D.C.: August 4, 1992), 5-16, 5-17.

Revised: 9/30/10

Instruments of transfer of land which is acquired for state highways may refer by parcel and project number to state highway plans which have been recorded in compliance with MCA 60-2-209 and are exempt from the surveying and platting requirements of this chapter. If such parcels are not shown on highway plans of record, instruments of transfer of such parcels will be accompanied by and refer to appropriate certificates of survey and plats when presented for recording (MCA 76-3-209).

Right-of-way plans are filed at the county courthouse. They become a part of the permanent public record. Many people use our plans and deeds to determine the boundaries of their property where it abuts the highway Right-of-Way. Any change made to the plans must likewise be filed at the county courthouse.

23-1.1 Montana Road Laws & Methods of Creating Public Roads

Right-of-way designers need to know how to work with different rights-of-way. Existing highway plans and their corresponding deeds simplify the task, but there are many roads for which we do not have that information. An understanding of State laws pertaining to roads is helpful in knowing what to do. Consider the following:

1. Dedication. This is the voluntary donation of land for public use, requiring an offer by the landowner and an acceptance by the public. A dedication cannot be revoked once it is accepted. Dedication is defined as follows:

    a. Statutory Dedication. Statutory dedication has specific requirements. Between 1889 and 1973, it was required that a certificate of dedication on all plats be signed by the owner of the land, with the signature acknowledged, that the "streets, avenues, alleys and parks or public squares are hereby granted and donated to the use of the public forever." (RCM, 1947, Sec. 11-606). After 1973 the Subdivision Act does not require any specific language. MCA 76-3-307 provides that every donation or grant to the public or to any person, society, or corporation "marked or noted" on a plat is to be considered a grant to the donee. State regulations (MCA 22.6.3003(3)(A)) require a " certificate of dedication of streets, park, playgrounds or other public improvements," but no specific language is given. The width of the Right-of-Way or easement thus created would be as shown on the plat or in the dedication. Prior to 1973, these dedications are considered Right-of-Way; after 1973 they are easements.

    b. Common Law Dedication. Common law dedication is recognized in Montana. If a person gives evidence of his intention to donate land to the

public and the public accepts that donation in reliance upon his actions, conduct or silence, the person is estopped from taking back his land. Deed reservations and exceptions can be a form of common law dedication. Common law dedications are always easements. Prior to December 31, 1966, there was no set width; after that date, common law dedications are 60 ft (18 m) in width.

c. Reservation. A reservation is a clause in a deed whereby the grantor creates in favor of himself some new thing issuing out of the land which did not previously exist independently. For example, "reserving a 20-ft (6-m) wide access easement for use by the grantor."

d. Exception. An exception is a clause in a deed that withholds from the operation of the deed something which would otherwise pass to the grantee. It withdraws the excepted property or interest from the description. We commonly have deeds excepting the highway Right-of-Way or easement. This means that the Right-of-Way is not passed on to the new owner.

2. Petition. This is the most common method of creating county roads in most states. In Montana, there are several statutory steps that apply to the establishing, altering and abandoning of county roads. Some of these are:

a. the petition must be presented to the County;

b. it must be signed by any ten or a majority of freeholders taxable in the District; and

c. it must contain the following:

- a description of the road;
- the general route;
- lands and owners affected;
- whether or not the owners consent to the road;
- where consent is not given, the cost of the Right-of-Way; and
- the necessity and advantage of the road.

See Appendix M for an example of a road petition.

3. Width of Roads (MCA 7-14-2112). This statute applies as follows:

a. County Facilities. The width of all County roads, except bridges, alleys or lanes, must be 60 ft (18.29 m), unless a greater or smaller width is

ordered by the Board of County Commissioners on petition of an interested person.

b. Private Facilities. The width of all private highways and byroads, except bridges, must be at least 20 ft (6.10 m).

c. Caveat. Nothing in this Section shall be construed as increasing or decreasing the width of either kind of highway or road established or used as such prior to December 31, 1966.

4. Condemnation. This method of creating roads arises from the right of eminent domain. This right predates the constitution and any legislation; it is a basic right of sovereignty. However, it is subject to the Fifth Amendment of the Constitution of the United States and the constitution of Montana, which state that private property cannot be acquired for public use without compensation. In condemnation proceedings, the private property subject to acquisition is described, as are the uses for which it may be acquired. A court determines damages, public interest and necessity. The court determines the width of the Right-of-Way.

5. Prescriptive Use. Six elements must be satisfied for the public to acquire a road by prescription:

a. continuous and uninterrupted use,

b. use by the public,

c. use must be adverse to the interest of the owner (without the owner's permission),

d. use must be for five years,

e. assertion of control by local authorities (the county maintains the road), and

f. use must be over a fixed and definite course.

Prescriptive easements normally are created by court action. Roads created by prescriptive use do not have a 60-ft (18.29-m) easement; the width is only that width used for passage.

6. Purchase. A governing body may purchase road rights-of-way. MDT purchases fee title by bargain and sale deeds; the Department may obtain easements for the counties by easement deeds.

Revised: 9/30/10

7. Abandonment of Public Roads. All public highways will continue to be public highways until abandoned by the Board of County Commissioners, or by operation of law, or judgment of a court of competent jurisdiction (MCA 7-14-1615). Non-use of a public thoroughfare does not constitute vacation or abandonment. Consider the following:

   a. City Streets. MCA 7-14-4114 requires a petition in writing of all owners of lots on the street or alley to be vacated. Vacated streets are not abandoned; the use as a street is vacated.

   b. County Streets. MCA 7-14-2616 requires a petition in writing of all owners of lots on the street or alley to be vacated.

   c. County Roads. MCA 7-14-2601 requires a petition in writing from any 10, or a majority, of freeholders in a road district. Abandonment is at the discretion of the county commissioners.

   d. State Highways. May be abandoned according to State statutes. Property held in fee is dispersed in a different manner than an easement.

8. Disposition of Title on Abandonment. Consider the following with respect to disposition of title on abandonment:

   a. Easement. Owners of abutting land are presumed to own to the centerline of the road, unless the easement was created from only one tract of land. Underlying title runs to the centerline, even where the deed calls only to the edge of the road.

   b. Conveyance. When properly abandoned, a roadway is conveyed to the abutting owners as described above.

   c. Fee Title. Fee owners may dispose of their title in any manner they wish (MCA 70-20-201).

9. Rights Surviving Abandonment. Consider the following with respect to rights surviving abandonment:

   a. Utilities. Utilities shall have an easement over the vacated land to continue the operation and maintenance of the public utility facility (MCA 76-3-305).

   b. Private Easements. Private easements survive abandonment of public rights-of-way.

23-1.2 Easement vs. Fee Interest

The following discusses the difference between easement and fee interest:

1. Easement Interest. When an easement interest is transferred, the fee title remains with the landowner or their assignees and they may continue to use the land described as long as it does not interfere with the use of the easement. MDT has purchased easements with instruments titled Right-of-Way deed, easement deed or even a grant or warranty deed, wherein is stated "an easement for roadway purposes only" is being conveyed.

2. Fee Interest. If fee interest is conveyed, the grantor no longer has any right to use the land conveyed. A grant deed, a warranty deed, a quitclaim deed or a bargain and sale deed generally transfers this interest.

3. Reversionary Interest. A reversionary interest is created if a clause in the deed reads something like this, "This land is transferred for the sole purpose of use as a road, and when this use ceases, the ownership of the property will revert back to the owner." This creates a future interest.

Revised: 9/30/10, 6/29/15

23-2 SECTION LINES

Section corners and lines can be placed in the R/W strip map as soon as all necessary section corner information is acquired. This information is most often in the form of a recorded certificate of survey (COS) and corner recordations. There may be an occasion when it is determined that a cadastral survey will not be completed. In the event a cadastral survey was not completed for a project, any information available from existing plans, such as as-built construction plans, railroad plans, existing R/W plans, etc., in combination with Government Land Office (GLO) plats can be used.

23-2.1 Geopak

In the ***R/W GEOPAK 2004 Procedural Manual***, complete Section 1 – Working with GEOPAK 2004 and Section 2 – Importing Existing Survey Files into GEOPAK 2004.

23-2.2 Placing Section Lines

Section lines and section corner cells should be placed in the R/W strip map file using a combination of the section corner point numbers imported into the Geopak "gpk" file, the recorded COS & corner recordations, and GLO plats. Review element attribute standards for correct line level, color, style and weight. Interior and exterior as well as found and unfound section lines are shown differently. Also review the BLM publication ***Restoration of Lost or Obliterated Corners & Subdivision of Sections – A Guide for Surveyors***, (1974).

23-2.2.1 Exterior Section Lines – Found vs. Unfound Corners

Use the following procedures when processing exterior section lines having found or unfound corners:

1. Found Corners. Connect the found corners. Be sure the lines terminate at the correct coordinates. Be thorough.

2. Without Found Corners. Sometimes the survey does not include all section corners necessary to place the exterior section lines. In such instances, you will have to compare the GLO plat with the COS and place the lines by protraction as shown in Figure 23-1.

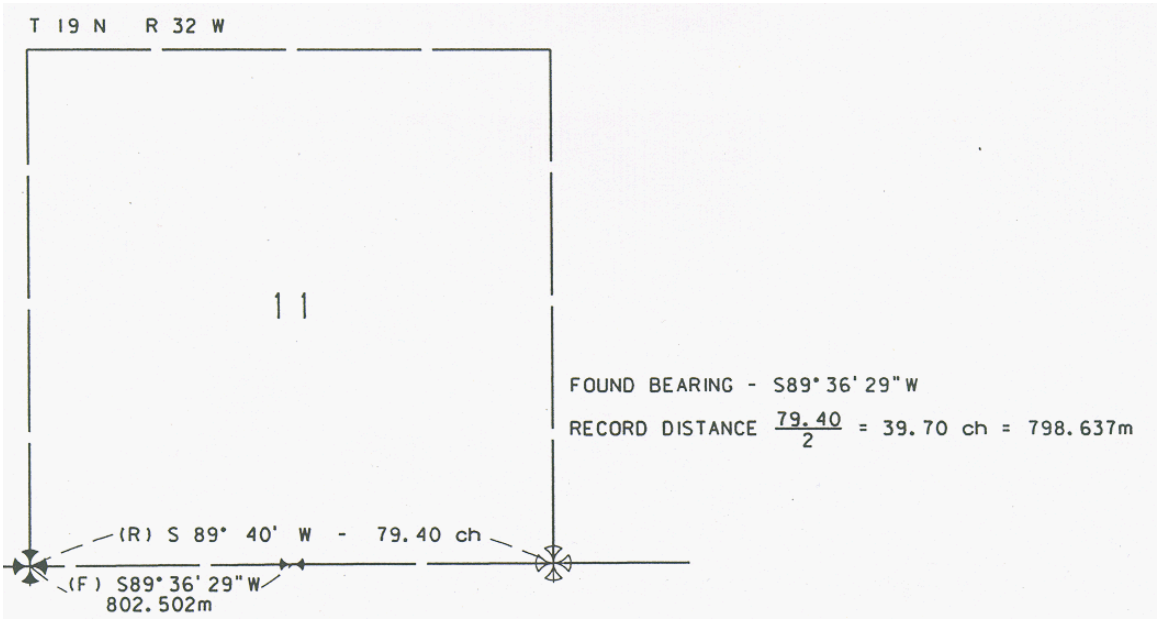

LINES PLACED BY PROTRACTION

Figure 23-1

In Figure 23-1, for example, if you have part of a section line, from the SW corner to the S¼ corner, and you need to show the line to the SE corner but have no survey, check the original and/or subsequent survey plat. If there is no break (change) in the bearing of the original survey at the ¼ corner, then project the section line through at the found bearing and record distance.

23-2.2.2 Interior Section Lines

Review the survey you have and compare it with the township plat. Use the following procedures for interior section lines:

1. <u>¼ Corners</u>. Place found ¼ section lines. Any unfound ¼ corners should be established by single proportion as shown in Figure 23-2.

2. <u>1/16 Corners</u>. Establish 1/16 corners mid-way between section corners and ¼ corners.

3. <u>Government Lot Lines</u>. Establish government lot lines. Government lots are found along rivers, lakes, mineral surveys, reservations, platted town sites and the north and west tiers of a township.

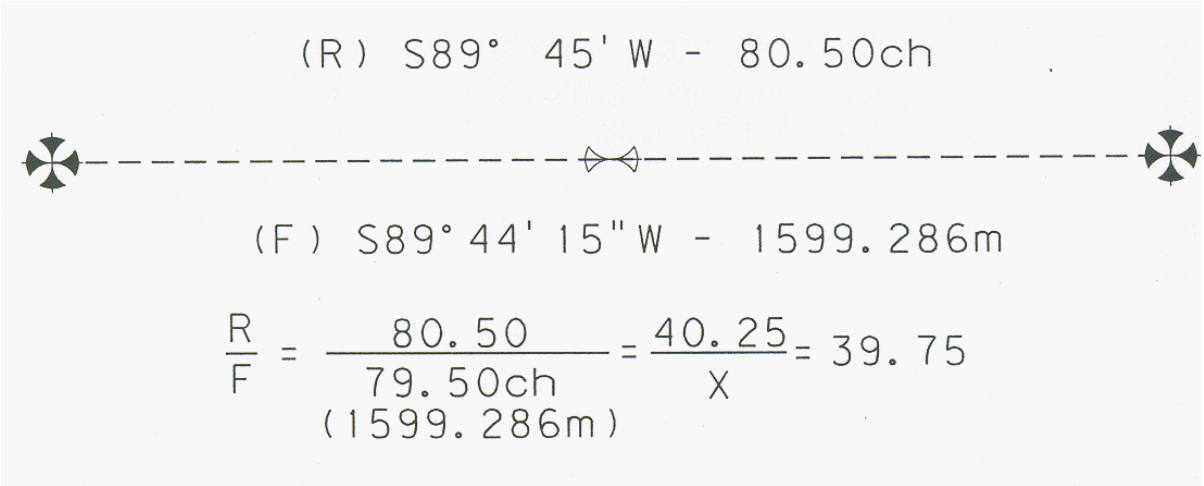

¼ CORNERS ESTABLISHED BY SINGLE PROPORTION

Figure 23-2

4. COS Review. Review any COS's you have. They may help you establish corner positions you need. If the project survey includes two consecutive corners of a COS, and the COS is tied to a section corner not included in the project survey, you may be able to "back into" the corner position. See Figure 23-3 and consider the following:

   a. Bearing Check. Compare bearings. If the bearing between the two consecutive monuments is the same on the COS and the project survey, do not rotate the lines. If the bearings are different, determine the angle of rotation and rotate all lines leading to the section corner to project survey basis of bearing.

   b. COS Distances. Use distances on the COS. If the project is State Plane Coordinate, convert the distances to grid.

   c. "NOT FOUND" Symbol. Be sure to use the "NOT FOUND" symbol for any controlling property corners established by protraction. Section corners established in this manner cannot be used for section corner ties in legal descriptions. They are to be used only to establish approximate section lines for graphical representation.

   d. Controlling Corners. Connect the property controlling corners.

Revised: 6/30/08

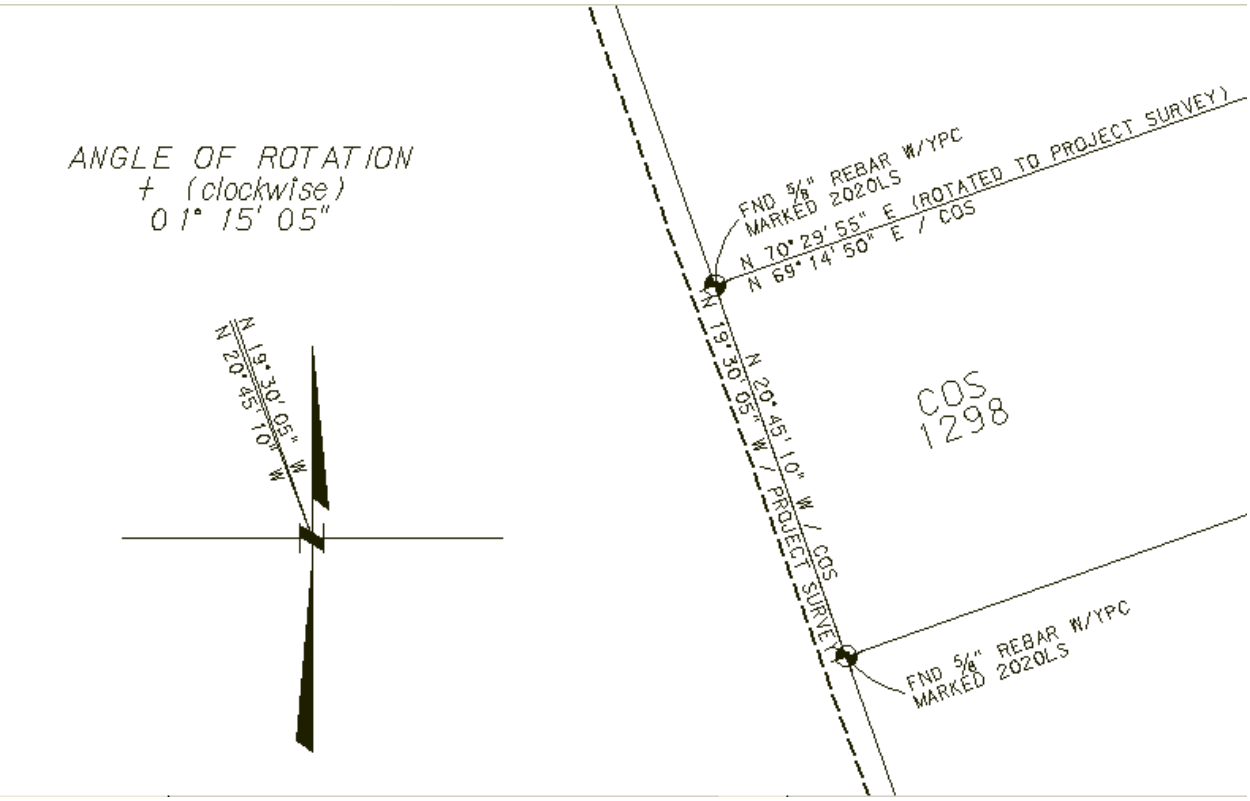

LINE ROTATION

Figure 23-3

23-2.3 Section Corner Ties

Section corner ties are essential to locate the centerline of the highway in relation to all property in a given section. They are also needed for the deed description. Section corner ties can be calculated using Geopak if the proper information has been imported. See Section 5 – Calculating Section Ties With Geopak in the ***Geopak 2004 R/W Procedures Manual***. Do not calculate a tie to a corner of a section not occupied by the highway. Do not "SNAP" to the centerline and section corner points in MicroStation to develop the tie; calculate it. Use the following to process section corner ties:

1. Intersections with Centerline. Section corner ties are established where every found section line crosses the highway centerline. At the intersection of the R/W centerline and found section line, a station needs to be calculated. Develop a bearing and distance to the found section corner on each side of the centerline. Use the following methods, as needed:

    a. Bearing–Bearing Intersection. Use a bearing-bearing intersection for the intersection of two lines (i.e., the section line and the centerline).

Revised: 7/1/09

b. Bearing–Distance Intersection. Use a bearing-distance intersection for the intersection of the section line and a curve on the highway.

c. Spiral Curves. If the section line should intersect the highway centerline in the spiral portion of a curve, use a curve point on the centerline to calculate the tie (T.S. or S.T.).

2. Additional section ties may need to be calculated to include one on the first and last sheet of a project or as specified on exhibits. See Chapter 25 for more information regarding section ties on exhibit sheets. If you do not have a section line crossing the highway centerline, a tie can be calculated from a centerline station to the nearest tied corner of that section. Choose a full station or a curve point for the centerline tie point.

23-2.4 Section Information Identified on the Plans

After placement of all section lines and calculation of section ties is completed in the R/W strip map, the appropriate 1/16 section calls, U.S. Government Lot calls, north arrow, township & range information, calculated section ties and project survey information need to be placed in each R/W plan sheet file. Use the following procedures:

1. "QTRCAL" and "LOTCAL" Cells. Use cells "QTRCAL" and "LOTCAL" to place the 1/16 section calls and U.S. Government Lot calls, as necessary, in the plan sheets. It may be necessary to repeat callouts more than once when a 1/16 section is shown on more than one plan sheet.

2. "NAR" and "TRCAL" Cells. Use cell "NAR" to place the north arrow and township & range information on each plan sheet. Align it to the north using the section lines. If the township and/or range changes on a particular plan sheet, cell "TRCAL" should be used rather than showing the township & range information with the north arrow.

3. "CORTIE" and "QTRTIE" Cells. Use cell "CORTIE" and "QTRTIE" to show the calculated information on the plan sheets. It may be necessary to drop status on the cell and delete any spaces creating gaps between words.

4. "SPCNOT" Cell. If the project is a state plane coordinate project, the cell "SPCNOT" should be placed at the bottom of all plan sheets.

Revised: 2/23/06

23-3 EXISTING R/W AND/OR EASEMENT (ACTIVITY 818)

Existing R/W and/or easement lines can be placed in the R/W strip map after all existing information available is acquire. This usually consists of existing plans and deeds from previous projects. The project survey should include retracement of existing R/W for a portion or all of the project length.

The Certificate of Survey including information from the cadastral and retracement surveys give coordinates for property controlling corners, property corners, and existing R/W monuments.

Placing the existing R/W and/or easement is often the most difficult and time-consuming part of Right-of-Way design. This is caused by lack of Right-of-Way monumentation, insufficient survey of the existing Right-of-Way; nebulous section corner ties on existing Right-of-Way plans; Right-of-Way calls that say "use fence" or Right-of-Way equals existing easement; and deeds that depend on a centerline that cannot be accurately depicted on the new plans; etc.

"It is very important that the Right-of-Way plans represent existing land title conditions as accurately as possible so that inaccuracies in the records of both State-owned and private properties are not propagated." [1]

When placement of existing Right-of-Way is complete, Road Design is to be notified by email or memo. R/W Design Supervisors shall also be notified and provided information as requested for a preliminary review of plans and file development.

23-3.1 Geopak

If the existing R/W was retraced, existing R/W point coordinates should already be imported into the Geopak "gpk" file with the section corner coordinates. Use these points to place retraced portions of existing R/W.

23-3.2 Placing Existing Highway R/W Lines

Compare all applicable information (e.g., existing plans, deeds, retracement survey) to place the existing R/W and/or easement lines in the R/W strip map. Remember to read the deeds. The plans do not always agree with the deeds. Changes in the

[1] Montana Department of Highways, ***Right-of-Way Design Workshop for Consultants Manual***, July 1990: pg. 14.

Revised: 2/23/06, 3/8/07, 9/30/10

Department's ownership may have occurred during negotiations with landowners and the plans were not updated. This is especially so with parcels that went into condemnation. Review the as-built construction plans too.

23-3.2.1 Retraced Lines

Much of the existing Right-of-Way and easement is monumented with 4 in (100-mm) square concrete monuments. These were to have been set so that the center back of the monument is on the Right-of-Way line. Project surveys are to locate these monuments at the center back. Reference monuments, usually smooth steel pins about 1 in (25 mm) in diameter, were set approximately 3 feet (0.9 m) inside the Right-of-Way at the same station as the concrete monument. If the project survey locates only a reference monument, you can establish a point on the Right-of-Way line using it. Because the reference pins were driven flush with the ground or below, they have often survived where the concrete monuments have been destroyed.

In 1977, MDT started to use rebar with marked aluminum caps to monument the Right-of-Way. By the early 1980's aluminum caps were used statewide to monument highway Right-of-Way. These are not visible from the road, as are the concrete monuments, but they may prove to be more permanent.

Consider the following procedures when using found Right-of-Way monuments:

1. Check Lateral Distance. Check the lateral distances between monuments or Right-of-Way lines established by the monuments. Do they agree with the record? Record, in this case, is the existing plans and deeds. For example, if the plans and deeds state the Department bought 80 feet (24 m) of easement or Right-of-Way and the distance between monuments is 84 feet (25.2 m), this is a substantial discrepancy. You must then determine if all of the discrepancy falls on one side of the existing centerline, or if it is equally divided on both sides, or unequally divided on both sides of the centerline. A judgment call will have to be made as to where the Right-of-Way line will be placed.

2. Check Longitudinal Distance. Check the longitudinal distances between monuments. How well do they fit the record? Is there a substantial discrepancy? Does the magnitude of the discrepancy occur throughout the project between found monuments or in one or two isolated locations? Do section corner ties or other survey information shed any light on the problem?

Revised: 3/8/07

3. Check Property Pins. Are there property pins that appear to be on the Right-of-Way line? Analyze them. Use them to establish the existing Right-of-Way, if they are reasonably close.

4. Missing Monuments. If monuments are missing, you will have to proportion any breaks between the found monuments. Figure 23-4 is an example of this situation.

5. Calculated Points. Generally there are two theories when it comes to retracement of the existing r/w.

   1) Hold the found monuments. Using this approach, calculated points generally are not created; the record widths and curve data are not maintained. Historically r/w was obtained relative to the centerline and not relative to r/w monuments.

   2) Using the found monuments, a best-fit centerline is determined for a geometrically correct alignment using found monuments. The r/w is then determined relative to this centerline. This procedure may create a calculated point. A calculated point is generally the calculated position of the r/w in close proximity of a found monument.

   If these calculated points are based on a proper retracement of the existing r/w by a PLS, these points can and should be used to establish the station and offset distance of a r/w = ex. r/w location.

   For example, a COS may show a found r/w monument as well as a calculated point where the Surveyor believes the location of the monument should be, based on a geometrically correct alignment. For Right-of-Way design purposes, the existing r/w line should pass through the calculated point, as shown on the COS.

6. Showing Surveyed Monuments. Surveyed r/w monuments (cell “RWMON” or “CALC”) and property pins (cell “PCF”) will have to be identified using the appropriate standard element attributes. If using a calculated point to establish the existing r/w line, the corresponding found monument should not be shown.

23-3.2.2 Non-Retraced Lines

In this case, you do not have any (or enough) located monuments to establish the existing Right-of-Way. You will have to re-establish the existing centerline in your strip map. There may be more than one centerline on the existing plans. On older plans there was typically a staked line and a projected line. The Right-of-Way should have

been designed off of the projected line. However, it may not have been. Be sure you get started with the correct centerline when laying in the existing Right-of-Way.

There are also times when there is a Right-of-Way centerline on the old plans. This is the line from which the Right-of-Way was purchased and it may be different than the staked and the projected centerline. If this is the case, you will have to establish this line to lay in the existing Right-of-Way. You should be able to calculate the offset from the projected centerline.

In 1985, the control traverse was introduced to MDT and with it the concept of one centerline on a project – the projected centerline. This has eliminated much confusion, but has not been used on every project involving Right-of-Way starting at that time. Use the following procedures:

1. Establish Starting Point. Find a starting point common to the project centerline and the existing centerline. Road Design or Project Survey may have identified a point or tangent common to the old and new project. This will appear in the road design strip map. Section tie(s) may also determine a starting point if it appears on the existing plan and you have the same section tied for the new project. However, look at the history of the corner on the certified corner record. If it states the corner “WAS NOT FOUND” but was re-established by some means for this project, this may not be the method to use. The new corner position will have to be evaluated in relation to the one called out on the existing plans. So, what does this mean?

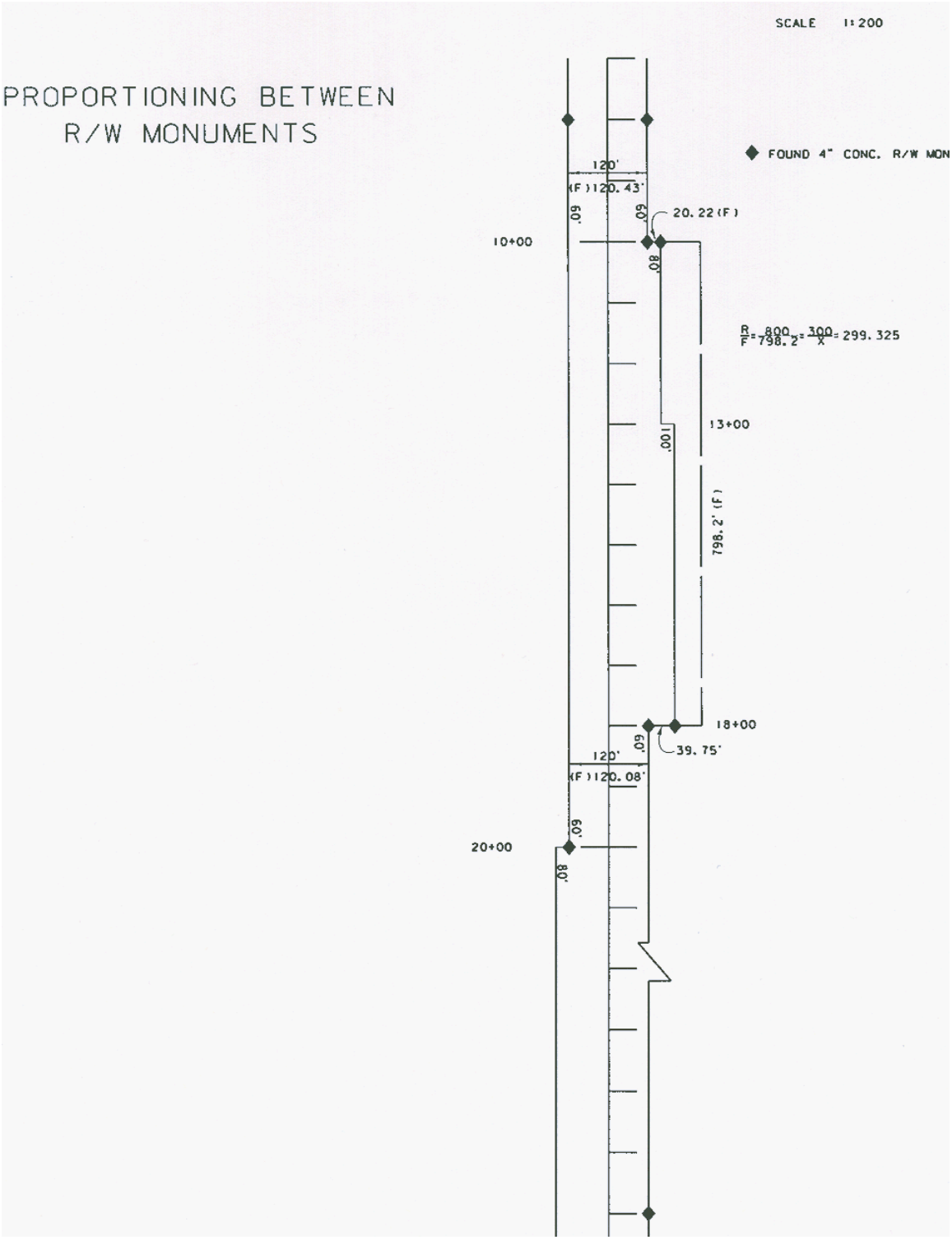

PROPORTIONING BETWEEN R/W MONUMENTS

Figure 23-4

If the existing plans show the section corner as 365.0 ft (111.3 m) from POT 30+00.00 and you measure along the section line to the centerline of the PTW from the section corner per the project survey, and the distance is now 400.0 ft (121.9 m) (all conversions applied), something is out of whack. Maybe the corner was not surveyed in on the existing plans – a common occurrence. Many of the corners shown on the existing plans were determined by protraction, not really found and tied by survey. Approach tied section corners on Right-of-Way plans predating 1988 with fear and trepidation. It cannot be said they are all reliable or unreliable. Make an effort to verify the information. If the found corner is described, it may be all right. You may be able to find the survey notes for such corners in the archives in the staking notes. A section corner tie thus used does not have to be at the beginning or end of the project. You can work both ways from it. Use as many as you have. Bisect the PTW and establish a beginning tangent.

2. Compare Bearings. Compare the project bearing with the existing bearing. Rotate the old bearing to the new, convert stationing from English to metric and reconstruct all tangents on the old centerline, rebuild the curves per the record, compare the record centerline with the centerline of the PTW. If they are reasonably close, draw in the record Right-of-Way parallel to the record centerline you have established.

23-3.3 Identification of Existing Highway R/W on the Plans

The existing Right-of-Way must be dimensioned and labeled distinguishing whether acquired by fee, easement or otherwise in the plan sheet files. Use the following procedures:

1. "OLDES" Cell. Use the "OLDES" cell from the cell library. Drop status on the cell and copy the appropriate label and arrow to the existing R/W, easement and railroad Right-of-Way lines.

2. Line Dimension Placement. The existing line dimensions will also need to be placed in the plan sheet files on level 28, as follows:

   a. Dimension the total existing Right-of-Way. Do not dimension from the centerline unless you have a centerline retracement survey and that is what you used to place the existing Right-of-Way.

   b. There should be an existing Right-of-Way dimension at the beginning and end of each plan sheet and at any change in width between.

Revised: 6/30/08, 7/1/09

c. Unless you have information to the contrary, use record dimensions. Check the deeds. If there is a different dimension than on the existing plans, the deed dimension prevails.

3. "EXRW Cell". Place cell "EXRW" at the bottom of the title sheet and all plan sheets if retracement survey was used to place existing R/W and include the survey recording information.

23-3.4 Placing Existing Railroad R/W

Railroads exercise absolute control on all Rights-of-Way, thereby necessitating treatment of their rights as complete. Highway Right-of-Way intersects railroad Right-of-Way at intersections and as a parallel encroachment. We must show railroad Right-of-Way as accurately as possible.

The Northern Pacific Railroad was the only land grant railroad in Montana. Burlington Northern–Santa Fe Railway and Montana Rail Link, now owns most of its tracks. Northern Pacific branch lines are not necessarily on grant land. Other railroads such as the Great Northern and the Chicago-Milwaukee-St. Paul & Pacific purchased land from private entities in fee. These fee purchases sometimes had a right of reverter clause. These railroads also obtained easements from private entities. Railroads built through State or Federal lands are on an easement.

For Right-of-Way purposes, MDT handles land that is controlled by the railroad in the same way as other ownerships regardless if it is held in fee or by easement. If the railroad has been officially abandoned as the CMSt.P & P has been, then the actual interest held by the railroad must be determined. Any easements held by the railroad may have reverted to the adjacent owner. Fee interests may have been purchased. Abandonment of a railroad involves a court action. Railroads can be classed as inactive, that is not used, but they have not been abandoned. MDT obtains easements, permits and licenses from the railroads to have highway facilities on railroad property. Railroad rights-of-way are usually monumented only by the tracks; the centerline of the mainline track is a good indication of the centerline of the Right-of-Way. Railroad Right-of-Way fences are helpful.

Railroad tracks have been known to move horizontally due to grade maintenance. Compare the location of the tracks with other features such as fences, buildings, and switches as shown on railroad plans. See Figure 1A in Appendix A – Drummond Station Plat and use the following procedures:

Revised: 6/30/08, 7/1/09, 6/29/15, 10/19/15

1. Check Railroad Alignment. Check the railroad alignment as shown in the strip map against the railroad plans. Tangent distances and curve data should be very close to the information on the railroad plans.

2. Place Railroad Right-of-Way. Place in the railroad right-of-way as shown on the plans in the R/W strip map using the appropriate standard element attributes. Use known railroad stationing from the project survey to get started. Railroad maps are a good source of section corner and section line information. The location of a section line crossing the project centerline and railroad is also a good place to start developing the railroad Right-of-Way.

23-3.5 Placing Existing County Road Easement Lines

We deal with county road easements on at least three types of projects: 1) off-system bridges, which are bridges on County roads and have a BR 9000 project number; 2) secondary roads that were at one time County roads; and 3) intersections of State highways with County roads.

By State statute a County can have only an easement for county roads. The width of County roads was established at 60 ft (18.29 m) by statute as early as 1872. This width can vary if donation or prescription, rather than petition, created the easement. If you can find no documentation to the contrary, use 60 ft (18.29 m). A telephone call to the County Road Superintendent to verify this width may be worthwhile.

Montana county map books are prepared by the Transportation Planning Division to determine fuel tax allocations. These maps reflect roads that are open to public travel but are not all necessarily deemed as county roads. This book may be a resource during initial research of county roads but should be verified with further supportive documentation.

There is seldom any Right-of-Way monumentation, per se, on County roads. Certificates of survey abutting County roads should have monumentation along the road. Look at the existing fence lines; they are often a good indication of the easement width. Splitting the PTW and applying the statutory width will establish most County road easements. Petitioned roads were to have a legal description. Your documents should include a copy of the petition. Compare the legal description with the PTW in the strip map. This may tell you nothing because of the rather primitive method of creating the description or, it could tell you all you need to know: an easement lying 30 ft (9.14 m) each side of the section line, for example.

Revised: 6/30/08

23-3.6 Identification of Existing County Easements on the Plans

County road easements do not need to be dotted or parcelized. Because they are public roads, the Department has the right to use that easement. Particular information does need to be specified within the plan sheet files. The County road names or number must be identified. County roads are dimensioned as done for existing r/w using the record distance.

Revised: 1/17/17

23-4 PROPERTY IDENTIFICATION

Property lines should be placed in the r/w strip map after section lines and existing r/w are placed and a complete ownership report is received. The ownership report can be found on the "\\astro\project1" drive. You should receive a hard copy and notification when it is complete. Also review the project survey. There may be property pins found that would be helpful.

Montana Cadastral Mapping has a website available that has become useful. However, it's advised that it be used only as a tool for aiding in any property identification. The information from this site will not be accepted as a replacement for placing legal descriptions or as a substitute for search of appropriate filed records at the Clerk & Recorders office. This site can be found at http://gis.mt.gov.

Various counties such as Flathead, Lake and Yellowstone have established online services for locating Clerk and Recorder documents. The online information is limited and varies from one county to another.

23-4.1 Placing Property Lines

Put the deeds in order from beginning of the project to the end. Read the legal descriptions. If you are in Eastern Montana and all the ownerships are by aliquot parts, you may be done. Property lines should not be shown if the property line is the section line. Otherwise, beginning at a known point such as a found and tied section corner, begin laying out the property lines as you did the existing highway right-of-way or the railroad right-of-way.

If distances shown are grid, you do not need to apply the CSF. If you have an existing COS and the distances are ground, you would need to scale (multiply) all distances by the CSF to get them to grid. In addition to scale, the existing COS would have to be rotated to the grid coordinate system.

23-4.1.1 Legal Descriptions

The following presents guidelines with respect to r/w legal descriptions:

1. Property Descriptions. In general, there are five types of property descriptions that you may come across, as follows:

Revised: 1/17/17

a. a perimeter description, usually called a metes and bounds description, refers to courses and distances around a parcel or by reference to natural or record monuments (Metes means length; bounds mean boundary lines.);

b. boundary determined by reference to adjoining parcels;

c. aliquot parts;

d. lot in a subdivision (i.e., plat or certificate of survey); and

e. a strip description for rights-of-way, such as a highway.

2. Limiting Effects. Limiting effects of different parts of a legal description include:

a. Caption. The caption provides a general, but county limiting, description of a property. It usually gives the section or quarter section, township and range.

b. Body. The body details the location of the property, such as metes and bounds description, reference to an exhibit, certificate of survey, plat, tract, lot & block, parcel, etc.

c. Qualifications. Qualifications add to, subtract from and/or encumber the deed.

3. Order of Importance. The order of importance of principle elements in a description is as follows:

a. Adjoiner. The Adjoiner is likened by the courts to a natural boundary. Consider the following:

- Overlaps. Consider junior-senior rights, look at the dates of the conveyances, and check tax records. In such cases, we do not attempt to clear landowners title problems.

- Gaps. Identify this area and parcelize it. Prepare a Quit Claim deed with deed exhibit for acquisition from adjacent landowners. If possible, identify the owner by going back in the chain of title.

b. Natural Monuments. Natural monuments include rivers, lakes, cliffs, creeks, trees and large boulders.

Revised: 1/17/17

c. Artificial Monuments. Artificial monuments (manmade) include rebars, wooden stakes, rock mounds, fences, sidewalks and highways. If documents show a contrary intent, or artificial monuments have a more certain location, these monuments may be considered equal in rank to natural monuments.

d. Maps, Plats and Field Notes. Maps, plats and field notes become a part of the legal description when they are referred to in a description. This is very common with certificates of survey.

e. Metes and Bounds. See Item 1.a.

4. Interpreting Legal Descriptions (MCA 70-20-201). The following are the rules for construing the descriptive part of a conveyance of real property when the construction is doubtful and there are no other sufficient circumstances to determine it:

a. Where there are certain definite and ascertained particulars in the description, the addition of others which are indefinite, unknown or false does not frustrate the conveyance, but it is to be construed by the first mentioned particulars.

b. When permanent and visible or ascertained boundaries or monuments are inconsistent with the measurement, either of lines, angles or surfaces, the boundaries or monuments are paramount.

c. Between different measurements which are inconsistent with each other, that of angles is paramount to that of surfaces and that of lines paramount to both.

d. When a road or stream of water not navigable is the boundary, the rights of the grantor to the middle of the road or the thread of the stream are included in the conveyance, except where the road or thread of the stream is held under another title.

e. When a navigable lake, where there is no tide, is the boundary, the rights of the grantor to low watermark are included in the conveyance.

f. When the description refers to a map and that reference is inconsistent with other particulars, it controls them if it appears that the parties acted with reference to the map; otherwise, the map is subordinate to other definite and ascertained particulars.

Revised: 1/17/17

At times, you have to determine the intent of a deed. The above statute helps you do that. Construe means to understand or explain the sense or intention of, usually in a particular way or with respect to a given set of circumstances.

23-4.1.2 Certificates of Survey or Plats

Start at a logical point, usually the section corner to which the description is tied, and draw in the description by bearing and distance. If you have tied property corners, check the bearing between two consecutive corners in the strip map and compare it with the bearing stated on the COS. Compute the rotation angle. Apply this to the remainder of the property lines on the COS as you draw them in. Use the record distances unless you have a good reason not to. Town, city and subdivision plats should be drawn in using the same method as certificates of survey.

23-4.2 Identification of Ownerships and Boundaries on the Plans

After all necessary property lines have been established, ownership dots, parcel numbers, COS/plat information, city names/labels and reservation names/labels must be added to the plans following r/w CADD standards.

23-4.2.1 Ownership Dots

Use the “Parallel” command and show them a distance of 5 ft (1.5 m) from the interior side of the property lines. Review element attribute standards for correct line level, color, style, and weight. Use ownership ties for lines that do not identify property boundaries (cell “TIE” or TIE90). Only fee simple property rights should be identified with property dots, except as follows:

1. Contract for Deed. Property under contract for deed, contract for purchase and notice of purchaser’s interest should be identified with property dots. If there is a contract for deed for only a portion of the parent tract, that portion is to also have property dots along its boundary line.

2. Railroad Right-of-Way. Railroad right-of-way will always be identified with property dots regardless of the underlying fee.

Revised: 1/17/17

23-4.2.2 COS/Plat Information

Place certificate of survey numbers, plat names, tract numbers, etc., on tracts outlined on the strip map, as follows:

1. Implemented By Deed. Any tract or parcel on a COS must be implemented by a deed for it to be shown as a parcel on the right-of-way plans. The certificate of survey does not create a parcel, the deed does. Note: Some counties do record a COS without a corresponding deed.

2. Same Owner. The COS number for a survey for the relocation of a common boundary is to be shown if the owner of both parcels is the same.

3. Platted Subdivision. Place the street names, subdivision names, block and lot numbers in any platted subdivision.

23-4.2.3 Parcelization

All ownerships on reconstruction, overlay and widening, and bridge projects will be parcelized. Parcels for which there is no acquisition or negotiation will be noted as "OWNER NOTIFICATION ONLY" on the ownership sheet. If there is negotiation (fencing, approaches, etc.), the parcel should be noted as "FOR NEGOTIATIONS ONLY".

The legal parcel number refers only to that portion of a tract being purchased by MDT, not the entire tract. However, for other than legal uses, MDT considers the parcel number to be the ownership.

Begin parcelizing at the left of the first plan sheet, right or left of centerline, as the first acquisition occurs. Weave back and forth across the centerline with the parcel numbers. Do not start on the left side (or right side) of centerline and run straight across, unless special circumstances warrant it.

Use cells "PRCL1", "PRCL2", "PRCL3", "PRCL4", "PRCL5", "PRCL6", "PRCL7", "PRCL8" or "PRCL9". Each cell has data fields containing a different number of spaces.

Keep track of the parcels assigned to each ownership for use in filling out the ownership sheet. The following is a list of guidelines to follow when parcelizing:

1. Parcel Numbers. Use different parcel numbers for the same owner where a dedicated street or alley separates the lots of that owner.

Revised: 1/17/17

2. County Line. When a contiguous ownership is located in two or more adjoining counties, those portions in each county will have a different parcel number.

3. Contract for Purchase. In the case of a contract for purchase of an entire tract, a single parcel number is assigned to the present fee owner. The name and address of the fee owner is shown in the ownership block as well as the contract purchaser. See parcels 13 and 14 of Figure 13A in Appendix A.

   If the contract purchase involves only a portion of the tract, two separate parcel numbers are required. The original tract would be Parcel 6, for example, so the portion under contract for deed would be numbered 6.1.

4. Material Sites, Borrow Pits, and Haul Roads. Material sites, haul roads, and gravel sources will be identified by a parcel number with the appropriate suffix:

   a. material site – MS,
   b. borrow pit – BP, and
   c. haul road – HR.

5. Off-Premise Signs. Off-Premise signs within the existing and proposed right-of-way are to be parcelized. Parcels for signs will have the suffix S, as in 24S. The number preceding the suffix S should always be the parcel number on which the sign is located, if there is more than one sign on a parcel use a series number after the S (e.g., 24S1, 24S2). The Outdoor Advertising Control (OAC) permit number needs to be listed with the owner name on the ownership sheet when applicable.

6. Wetland Parcels. Wetland parcels will be designated with a W, as in 2W. The number preceding the suffix W should always be the parcel on which the easement is located.

7. Conservation Easements. Conservation easements are to be parcelized with the suffix CE. For example, 9CE. The number preceding the suffix CE should always be the parcel on which the easement is located.

8. Construction Permit. A parcel number will be assigned to any property that has a construction permit or easement located within its boundaries.

9. Existing (or Underlying) Non-Roadway Easements. A parcel number will be assigned to any property right that has been temporarily or permanently vested with others prior to public need. These will be limited to those easements that are recorded and have described limits or there is evidence on the ground as to their existence. An example might be an easement for an underground power line or water line from one neighbor to another.

Revised: 1/17/17

10. Leasehold Interests. Gross and net r/w, easements, licenses, and/or permits need to be reflected on the ownership sheet for lease parcels. Consider the following:

    a. Railroads. Industrial or commercial developments on railroad right-of-way are identified by the railroad parcel number followed first by the letter L and second by an identifying number (e.g., 12L3, 12L4).

    b. Tribal Indian. If a tract of land owned by a Tribe is leased, it will be identified by the parcel number followed first by the letter L and second by an identifying number (e.g., 13L1, 13L2).

11. Irrigation Districts and Canals. When any irrigation facility is affected, a parcel number will identify it. A single parcel may identify all crossings that are owned by one irrigation district or company.

12. Irrigation Districts or Canals Not Affected by the Project. Irrigated lands subject to long term indebtedness for construction, operation and maintenance require identification of the ditch company serving the land. The ditch company is assigned a parcel number that is shown in the ownership block only.

13. Semi-Private Irrigation Ditches. A parcel number will identify small ditches that serve more than one owner. All interests in a ditch should be identified on the right-of-way plan, if possible.

14. Railroads. Railroads (operating and non-operating r/w) need to be identified by a parcel number. The same number is to be used for all crossings on a project except when crossing a county line.

15. Public Lands. State, Federal, County or City non-dedicated r/w will be identified by a parcel number.

16. Grade Changes in Urban and Suburban Areas. Any property that may be denied reasonable access due to a significant change (over 0.5 ft (0.15 m)) in the grade will be assigned a parcel number.

17. Access Control. Any ownership for which MDT is conveyed access rights will be given a parcel number. If this is the only property right acquired, enter “ACCESS CONTROL ONLY” in the ownership block.

18. Replacement Sites for Section 6(f) Lands. 6(f) Lands are those purchased under the Land and Water Conservation Act. Any part of these lands required for right-of-way must be replaced with like land of the same value. The replacement land that MDT buys is referred to as a 6(f) parcel and is assigned a parcel number. If

Revised: 1/17/17

the replacement land adjoins the project, it is shown on the plan sheet; if not, a sheet showing the parcel is added to the plans. This could be a certificate of survey, plat, deed exhibit, etc. Environmental Services will identify any 6(f) land.

4(f) land is publicly owned parks, recreation areas, wildlife and waterfowl refuges. These lands can be purchased for right-of-way purposes but an environmental document is required to do so. 4(f) land includes fairgrounds, city parks, national wildlife refuges, state parks, etc.

19. Streambeds. The Department of Natural Resources and Conservation (DNRC) has declared certain reaches of numerous rivers and streams navigable. It claims an interest in the streambed from low water mark to low water mark. These streambeds are parcelized where bridges cross them. These parcels do not have ownership property dots. The riparian owners, as well, have rights to these streambeds and their ownership is delineated with property dots. See Appendix L for a list of waterways claimed as navigable by DNRC.

20. Missile Cable Crossings. Missile cable crossings are parcelized.

21. Public or Private Utility Crossings. Public or Private Utility crossings that are not noted in the utility notes are to be parcelized. Examples are water lines, natural gas and steam lines. As a rule these utilities do not belong to the adjoiners. They are quite rare.

22. Tribal Indian Allotment Acquisition. Each tribal allotment acquisition is required to have an individual parcel number and the allotment number listed. If a person owns adjoining allotments, each allotment will still receive a different parcel number. The same is true if the Tribe is the owner.

23. No Parcel Numbers. The following do not generally require parcel numbers:

    a. existing public roadways,
    b. public utility crossings (rare exceptions),
    c. private utility crossings (rare exceptions),
    d. leases on private lands, and
    e. leases on public lands.

24. R/W vs. Easement. Parcelize with existing r/w vs. easement as follows:

    a. If MDT purchased the existing right-of-way in fee with a bargain and sale deed, warranty deed or grant deed, it is not parcelized.

b. If MDT purchased the existing r/w as an easement, then the underlying fee must be identified on the plans. When the current adjoiner owns the underlying fee, it is included in the owner's parcel. When a current adjoiners' deed excepts the highway right-of-way, that portion of the right-of-way is not parcelized and the ownership dots go to the existing right-of-way line. See Figures 2A through 4A in Appendix A.

c. If the owner is the same on both sides of the highway and MDT has an easement for the highway, the same parcel number is used for the ownership on both sides of the highway as well as for the underlying fee. However, if the highway easement is excepted in the adjoiner's deed, then a different parcel number must be assigned to the areas on both sides of the highway. See Figure 2A in Appendix A.

25. Change in the Dimensions. Any change in the dimensions of a parcel prior to acquisition does not affect the parcel number.

26. Subdivided Parcels. A parcel originally under one ownership that is subdivided and sold prior to acquisition, requires treatment as two or more individual parcels. The original parcel number will be retained for that portion still under the original ownership. Portions under new ownership will be given the same parcel number with a decimal suffix, such as 1.1, 1.2, 1.3, etc.

27. Additional Purchases After Acquisition. When it becomes necessary to purchase additional right-of-way on any project after the original parcel has been closed, the parcel is identified by the original parcel number followed by the letter A, for example 15A. Another purchase from parcel 15 would be shown as 15B.

28. Advance Acquisition Parcels. If a parcel is authorized for advance acquisition, the parcel number designated to it cannot be changed upon authorization of the remainder of the project.

29. Condominium Units. In the case of condominiums, a single parcel number is given to all owners of the units.

23-4.3 Property Identification and the Ownership Sheet

Ownership information can be placed at the top of the plan sheets or on a separate ownership sheet; however, if there are more than five total ownerships on the project, they should be shown on an ownership sheet. Ownership information includes the parcel number, owner names and addresses and tribal allotment numbers when applicable.

Revised: 1/17/17

Parcels should not be shown as deleted prior to authorization. If it is necessary to delete an ownership parcel prior to authorization, the project will need to be re-parcelized.

23-4.3.1 Owner Names

The fee title owner(s) should be listed on the ownership sheet.

In rare instances when a disagreement exists between the Title Company and interpretation of the vesting documents, contact the Title Company and also ensure the Acquisition Section is involved. They will be ultimately responsible for obtaining a Title Insurance policy and will need to satisfy the Title Company as well.

1. Condominium Units. If there is a homeowners' association, list the owner as the homeowners' association. If no association exists, list the first unit owner, et al. When Access Control is the only involvement, if there is a homeowners' association list as Access Control only. If there are individual unit owners, list as Owner Notification Only.

2. Trusts. List the trust on the ownership sheet. The trust owns the property and the trustee manages the property for the benefit of the trust. Over time the trustee(s) can change and that may not be part of the public record.

3. Deceased Owners. Upon the death of a joint tenant, if a 'Statement of Acknowledgement' or 'Termination of Joint Tenancy' has been recorded the surviving vested owner(s) is listed on the plans. When tenants in common is not identified on the vesting deed, the decedents title will pass to their heirs upon probate. The text "the heirs and devisees of" the deceased owner are listed. Tenancy not identified in the vesting deed is tenants in common by default.

In addition to the fee owner(s), any of the following should be indicated as well:

- contract for deeds (C/D)
- notice of purchaser's interest (NPI),
- life estates.

Revised: 1/17/17

23-4.3.2 Areas

Most areas are shown in hectares rounded to three decimal places and labeled with "ha". The English area will be shown in acres (ac), labeled "AC", converted from the hectares (ha) and rounded to two decimal places.

If the land is in an urban area or an area of relatively high value, the area will be shown to the nearest square meter and labeled as m^2. The English area will be shown in square feet converted from meters and labeled as "SF".

1. Total Areas. Environmental Services has to know how much land is held by a particular owner to determine if the project's impact is significant or not. Total areas are also used by Right-of-Way Agents when they appraise property.

   Total contiguous areas less than 160 acres shall be used as shown on the COS, deed or subdivision plat. A total area less than 160 acres and not defined by a COS, deed or subdivision plat is approximated and shown on the ownership sheet with a ±. If the total area is equal or greater than 160 acres, it is shown on the ownership sheet as 64.750+ ha, 160.00+ AC.

2. Acquisition Areas. The existing area plus the net area should equal the gross.

3. Remainder Areas. When the total area is defined by a COS, deed or subdivision plat, a remainder area shall be shown on the plans.

4. Easement Areas. Easement areas should be listed in the easement area column on the ownership sheet. Some easements (tribal, USFS, county roads, etc.) may be shown in the net or easement area column. Use a symbol and note to indicate different types of easements.

5. Overlap Areas. When there are overlapping areas be sure to note the area of overlap on the ownership sheet so the appraiser values the acquisition correctly.

23-4.3.3 Owner Notification vs. Negotiations Only

All reports (PFR, SOW, A&G, PIH) should be thoroughly read to identify any information about the projects. These documents may indicate any involvement there would be.

1. Owner Notification Only. If there is no involvement with a parcel at all, use "OWNER NOTIFICATION ONLY". See Figure 13A in Appendix A.

2. For Negotiations Only. If there will be any approach work, fencing issue, or any issue at all, use "FOR NEGOTIATIONS ONLY". Railroad Lessee parcels should

Revised: 1/17/17

always be listed as negotiations only unless there is an area of acquisition, license, or construction permit.

Revised: 1/17/17

23-5 TITLE COMMITMENTS (ACTIVITY 808)

Whenever it is ascertained that MDT will acquire an easement, right-of-way or access control, title evidence must be obtained. This comes from a title insurance company in the form of a title commitment. MDT maintains an agreement with the Montana Land and Title Association (MLTA) to provide title commitments. The agreement between MDT and the MLTA can be viewed on the MLTA website. They need to be ordered upon receipt of preliminary construction limit notification. This should allow enough time to receive and request corrections if necessary before final plan preparation.

The Title Company is responsible for showing the complete ownership and title information for all land required for highway right-of-way except land owned by the United States or the State of Montana which has never been patented. We request the title company to place the name of the agency that owns these lands on the plan sheet that is to be returned to the Department of Transportation.

Title commitments should be updated if older than two (2) years. Updated commitments can be requested within the two-year period at no additional charge. Refer to the Title Policy Procedures for further detail of the Montana Land Title Association's agreement with MDT.

Occasionally, we will not be able to get title commitments or may choose not to do so on a given project. In these instances, the last deed of record is used in place of the title commitment. If a Quit Claim deed is the last deed of record, it is required that the prior vesting deed that transferred title to the grantor be supplied to ensure equitable title is being conveyed by the Quit Claim deed.

Title commitments are not necessary for owner notification only and construction permit only parcels. A vesting deed is used in place of the title commitment; however, the title commitment should be used if it is already available.

Condominium parcels – if there is acquisition a title commitment will be required for each ownership. If it is an access control or owner notification only parcel, secure vesting deeds instead of title commitments due to the possibility of numerous unit owners, as the cost may be substantial. Obtain copies of the recorded By-Laws and Declaration of Condominium Unit Ownership as these documents should identify if there is a Homeowners' Association. These documents should be scanned and placed in the Title Commitment folder in the ROW Directory. The title company will need to be notified in advance if you know there are condominiums on a project.

Revised: 1/17/17

It is the R/W Designer's responsibility to request title commitments. In general, title commitments will be ordered upon receipt of preliminary limits. If so desired, commitments can be ordered upon receipt of the PFR.

23-5.1 Title Commitment Contents

The layout of a title commitment may vary but generally is as follows:

1. agreement to issue policy.

2. Schedule A:

    a. commitment date,
    b. policies to be issued, amounts and proposed insured,
    c. interest in the land and owner, and
    d. description of the land.

3. Schedule B:

    a. requirements,
    b. exceptions, and
    c. conditions.

4. Copies of vesting deeds and COS or subdivision plats, if applicable.

23-5.2 Ordering Title Commitments

Use the following procedures when ordering title commitments:

1. Two copies of existing r/w plans or preliminary r/w plans should be marked in red with a line parallel and 200 ft (60 m) distant from the centerline with dimensions. If it is necessary to go out farther to accommodate the construction limits, do so. In urban areas, the distance from centerline can be adjusted to include only the adjacent ownerships.

    If you need the title information before your preliminary plans are ready, use the existing right-of-way plans; or for off-system bridges, use USGS quadrangle maps or county road maps.

2. Give the maps to the Financial Specialist in the Design/Plans Section with a note or memo requesting title commitments to be ordered. Identify the county if not shown on the plans and the approximate number of expected parcels. A letter

will be prepared to the Title Company. The Designer can contact the Title Company about missing documentation.

23-5.3 Reviewing Completed Title Commitments

Do the following immediately upon receipt of the title commitments, as title companies need to be paid in a timely manner:

1. Review the title commitments for payment approval. Do a cursory review to determine:

   a. that they are located adjacent to the project and the correct legal description includes all areas of acquisition;
   b. appropriate fees are applied according to the current MDT MLTA POLICY PROCEDURES; and
   c. all last documents of record and exceptions to ensure 100% title are included.

2. Give the invoice to the Financial Section. Do not make any notations on the original invoice. The invoice will then be paid and a title commitment file created. The electronic file on the server should always match the current copy in the title commitment file.

3. Create a project folder in ROW\PLANS\TITLE_COMMITMENTS\DISTRICT #\ with the UPN as the folder name. If title commitments are delivered in an electronic pdf format, copy the title commitments into that folder. If Title commitments are delivered in a paper format, scan the title commitment into a pdf file and move the file into that folder.

4. If the title work comes in several files, merge these files into one file. Each parcel should only have one file.

5. Rename electronic files to include the parcel number.

6. When the project is authorized, the authorization e-mail will explain that this is an electronic title project and the recipient is responsible for printing title documents if needed. Blue sheet revision e-mails will also explain that this is an electronic title project and the recipient is responsible for printing title documents for new or changed parcels if needed. If you get a new title commitment that is not part of a new authorization or a blue sheet revision, you must send out an electronic title revision e-mail to the appropriate distribution list.

7. When you get an updated title commitment for a parcel, merge the existing title commitment file with the updated file placing the new commitment in front of the

Revised: 1/17/17

older one. Place a large VOID on the cover of the old commitment. Do not destroy the old commitment in the paper file. Place a large red x across the cover and put a copy of the new commitment on top. There should only be one file for every parcel and all of the title work we have should be in that file.

Revised: 1/17/17

23-6 PRELIMINARY R/W DESIGN

Right-of-Way is generally acquired in MDT's name. Some circumstances require MDT to acquire right-of-way in the name of an alternate authority such as the City or County. Right-of-Way proposed for intersecting road construction may need to be acquired differently than the project mainline r/w. Discussion should take place with the Project Manager and District Engineering Services Supervisor early in the project development and documented in the milestone reports. Road jurisdiction, existing r/w ownership, maintenance authority and city/urban boundaries should be factors considered. These situations should be noted with areas on the ownership sheet and proposed r/w design segregated accordingly.

Preliminary r/w should not be designed until Road Design has notified Right-of-Way, in writing, of preliminary alignment and construction limits. This will take place after the alignment and grade has been completed (Road Design Activity 216). In many cases, the construction limits will change throughout the road design process. If the r/w is designed from copied preliminary construction limits, a great amount of time is saved by not making constant design changes. Changes in the construction limits affecting r/w design can be addressed when notification of final construction limits is received.

Note that Road Design and R/W Design Activity dates should be tracked in Oracle.

23-6.1 Preparing for R/W Design

Upon notification of preliminary construction limits from Road Design, the following procedures should be completed to ensure the correct information is used for preliminary r/w design:

1. The construction limits and alignment information should be copied into the r/w strip map file as described below:

    a. Copy the road design centerline (metric level 3), centerline text (metric level 4) and construction limits (metric level 33) into the r/w strip map file.

    b. Modify road design centerline and text to metric level 25 - english level 3017. Modify construction limits to metric level 26 - english level 3018.

    c. Turn off all of this information from the road design strip map reference file.

    d. In all plan sheet files, turn off centerline, centerline text and construction limits from the road design strip map reference files. Turn on copied

Revised: 1/17/17

centerline, centerline text and construction limits from the r/w strip map reference files (metric levels 25 and 26 – english levels 3017 and 3018).

e. In all exhibit files: turn off centerline, centerline text and construction limits from the road design strip map reference files. Turn on copied centerline and centerline text (metric level 25 – english level 3017) and turn off copied construction limits (metric level 26 – english level 3018) from the r/w strip map reference files.

2. Download the Geopak "gpk" file from the "RD" directory and send it to the "RO" directory on DMS.

3. Topography should be shown referenced from the road design, photogrammetry or survey strip maps. It may be half-toned (grey scale), except for utilities. Utilities may be grey scale where it would ease congestion of the plans.

4. Road detour centerlines and detour construction limits should be turned on and shown referenced from the road design strip map on the r/w plan sheets as space allows.

23-6.2 Designing New R/W

MDT's policy is to acquire right-of-way of sufficient width to accommodate construction and maintenance of the roadway. Design new r/w lines parallel to the centerline using the information discussed in the following Sections. Use road design plans and cross sections when considering design options.

Revised: 1/17/17

23-6.2.1 Standard R/W Widths

The decision to design to standard r/w widths or minimum allowable widths should be addressed in the scope of work document.

Standard r/w widths are shown in Figure 23-5.

Facility Type	Preferred R/W Width ①	
	(ft)	(m)
Interstate (I, IG, IM)		
no frontage road	80	25
frontage road	65	20
National Highway (NH)	80	25
Primary Highway (F)	80	25
Secondary Highway (S)	65	20
County Roads	30	9.14
Urban Streets	②	
Sidewalks	③	

Notes:

1. *Distance from nearest centerline, unless otherwise specified.*
2. *Curb to curb (back of curb) plus 10 ft (3 m).*
3. *Preferred r/w width is 3 ft (1 m) beyond the back of the sidewalk.*

STANDARD R/W WIDTHS

Figure 23-5

Arterial Highways

Standard Right-of-Way Width

The standard right-of-way limits for all arterial projects is 25m (80 ft.) from the centerline of the nearest roadway to the right-of-way line or 3 meters (10 ft.) beyond the construction limits, whichever is greater. The minimum length of parallel right-of-way is 150 meters (500 ft.).

Minimum Allowable Right-of-Way Width

The minimum allowable right-of-way width for an arterial project is three meters (10 ft.) beyond the construction limits. The minimum length of parallel right-of-way is 150 meters (500 ft.).

During the Preliminary Field Review and the Alignment and Grade Review, the decision will be made whether the project will be designed to the minimum allowable right-of-way width. The decision to design and acquire the right-of-way to the minimum allowable width must be documented in the Scope of Work (SOW) report. The minimum

Revised: 1/17/17

allowable right-of-way width should only be used where the clear zone is within the right-of-way.

The Chief Engineer or Designee must approve any right-of-way limit less than the minimum allowable width.

The standard and minimum right-of-way requirements are not applicable to projects that are proposed to stay within the existing right-of-way, such as some safety projects.

Collector Highways

Standard Right-of-Way Width
The standard right-of-way limits for a collector project is 20 meters (65 ft.) from centerline of the nearest roadway to the right-of-way line or three meters (10 ft.) beyond the construction limits, whichever is greater. The minimum length of parallel right-of-way is 150 meters (500 ft.).

Minimum Allowable Right-of-Way
The minimum allowable right-of-way width for a collector project is three meters (10 ft.) beyond the construction limits. The minimum length of parallel right-of-way is 150 meters (500 ft.)

During the Preliminary Field Review and the Alignment and Grade Review, the decision will be made whether the project will be designed to the minimum allowable right-of-way width. The decision to design and acquire the right-of-way to the minimum allowable width must be documented in the Scope of Work (SOW) report. The minimum allowable right-of-way width should only be used where the clear zone is within the right-of-way.

The Chief Engineer or Designee must approve any right-of-way limit less than the minimum allowable width.

The standard and minimum right-of-way requirements are not applicable to projects that are proposed to stay within the existing right-of-way, such as some safety projects.

Urban Highways

There are no set rules governing right-of-way widths in urban areas. Sound engineering judgment must be applied to obtain a logical balance between right-of-way costs and right-of-way widths. This must be coordinated with the local road authority and documented in the project documents for an urban design within urban limits. .

Revised: 1/17/17

Urban rights-of-way must be wide enough to accommodate the curb to curb dimensions of the highway or street plus a border strip between the curb and the right-of-way on each side, typically to provide space for sidewalks, signs, fire hydrants, street lights, etc. Except where existing improvements do not permit, border strips should be at least three meters (10 ft.) and preferably four meters (13 ft.) or more, particularly on reconstruct type projects in suburban/undeveloped areas. The border strip is defined as the area between the curb and the right-of-way line.

Where possible, sufficient right-of-way should be acquired at intersections to provide adequate sight distance.

Urban Projects within Urban Limits

The minimum right-of-way width shall be sufficient to encompass all project design features, including construction limits, utilities, signs, lighting, sidewalks, etc.

Frontage Roads

Standard Right-of-Way Width
The standard right-of-way limit for a frontage road is 20 meters (65 ft.) from centerline of the frontage road to the right-of-way line. The minimum length of parallel right-of-way is 150 meters (500 ft.).

Minimum Allowable Right-of-Way Width
The minimum allowable right-of-way width for a frontage road is three meters (10 ft.) beyond the construction limits, but shall never be less than 9.1 meters (30 ft.) from the frontage road centerline, where there is no common right-of-way with another roadway. The minimum length of parallel right-of-way is 150 meters (500 ft.).

During the Preliminary Field Review and the Alignment and Grade Review, the decision will be made whether the project will be designed to the minimum allowable right-of-way width. The decision to design and acquire the right-of-way to the minimum allowable width must be documented in the Scope of Work (SOW) report. The minimum allowable right-of-way width should only be used when the clear zone is within the right-of-way.

The Chief Engineer or Designee must approve any right-of-way limit less than the minimum allowable width.

The standard and minimum right-of-way requirements are not applicable to projects that are proposed to stay within the existing right-of-way, such as some safety projects.

Revised: 1/17/17

Bridge Projects (on System)

The standard right-of-way width based upon the roadway classifications discussed above is normally maintained through the bridge and connected to the existing right-of-way width of the existing roadway at the beginning and end of the bridge project.

Bridge Projects (off System)

The minimum allowable right-of-way width for an off system bridge project is three meters (10 ft.) beyond the construction limits, but never less than 9.1 meters (30 ft.) from the county road centerline. The right-of-way width is maintained through the bridge and connected to the existing right-of-way of the existing roadway at the beginning and end of the bridge project.

23-6.2.2 Right-of-Way Break Guidelines

Every effort should be made to apply the following guidelines. Situations may arise when exceptions may be advantageous but should be avoided when possible:

1. Parallel Centerline. A right-of-way width should be parallel to the centerline and maintained for at least 450 ft (150 m). When designing new right-of-way to minimum standards this standard may not be practical.

2. Width Increment. Right-of-Way widths should be in whole unit increments.

3. Stationing. Every effort should be made to break right-of-way at even stations unless certain circumstances warrant otherwise.

4. Tapers. Changes in right-of-way widths tying into existing r/w should be at a 4:1 or larger taper, unless the change in width is more than 25 feet (7.6 m).

5. R/W Changes at Property Line. Changes in right-of-way widths cannot be made on property lines or section lines, unless they are monumented and tied by survey. It should be clear to the adjacent property owner that the highway monuments are not intended for use in locating his property lines that intersect the right-of-way.

Revised: 1/17/17

6. R/W = Property Lines. If there is no choice but to place a break at a property line, do not make up a station for that point. In the plan sheet, simply describe the line at which the break occurs as "R/W = PROPERTY LINE".

   * Notify the District Surveyor so there is sufficient time to identify any existing property corners prior to construction to help establish the r/w break accurately.

7. Spiral Curves. The right-of-way line on a spiral curve is a chord drawn between the TS and SC or the SC and ST. Breaks should not be made on this chord, as it cannot be stationed.

8. Curve Points. Breaks should coincide with curve points – PC's, PT's, TS's, ST's, etc., if possible.

9. Left/Right Coordination. Attempt to make breaks coincide left and right of centerline.

10. Property Boundaries. Consider property boundaries. It may be advisable to run the right-of-way along a property line to avoid leaving a narrow strip of land.

11. Railroad Right-of-Way. Design the right-of-way line along an existing railroad right-of-way line where possible: i.e., "R/W = RR R/W".

12. Existing Easements and R/W. New right-of-way lines should not be placed inside existing easement or right-of-way lines, unless the distance between them is excessive. Unless there is enough existing easement to discharge to the adjoining owner, MDT will still control the land to the old line. Do not create "spaghetti" strips of different holdings i.e. existing easement or existing right-of-way. If the new right-of-way line appears to be on or near the existing, un-monumented right-of-way or easement line, place it outside by 3 ft (1 m) and include this in net area. The new right-of-way will be monumented and the question of where the "line" is on the ground will be answered.

13. Monuments and Pins. Consider using found and surveyed right-of-way monuments and property pins as breaks in your design.

14. Fencing. In some areas, fencing the right-of-way costs more than purchasing the land. Keeping breaks to a minimum can reduce fencing costs.

15. Adjoiners. Remember that you are creating property lines. Consider the property line you are creating for the adjoiner. He will probably be happier with fewer jogs in his property line.

Revised: 1/17/17

16. Railroad and MDT Maintenance Parcels. See Section 23-8 when designing new r/w with Railroad and MDT Maintenance Site parcels.

17. Converting Existing Easement. Convert existing easement to fee on all parcels that have a new fee acquisition or at the landowner's request.

18. Intersecting County Roads. Design mainline right-of-way through intersecting county road easements.

23-6.3 Easement Design

Design easements parallel to the design centerline for permanent features to the roadway using a solid line style and easement callouts. MDT needs to maintain these areas requiring a permanent right to enter the property. Easements should be designed for the following conditions:

- channel changes of natural streams;
- riprap or concrete aprons outside the roadway;
- culvert ends or highway drain ditches outside the roadway, but not for irrigation ditches outside the right-of-way;
- railroad crossings or parallel encroachments;
- irrigation canals and ditches are purchased for the water rights owner if they are other than the landowner (See Figure 6A in Appendix A);
- approaches purchased for the adjoining owners if the highway project causes the existing approach to be moved, or creates a new approach; and

23-6.4 Construction Permits

Design construction permits parallel to the centerline at a minimum of 3-ft (1-m) in whole unit increments to provide an area to accommodate construction that leaves no permanent road feature on the land after construction. A construction permit can be likened to renting the land for a stipulated length of time. At the end of construction this piece of land should be returned to the owner in such condition that he can use it for whatever he used it before.

Revised: 1/17/17

Construction permits are not intended to accommodate permanent highway features. When the construction of the highway is complete, the permit expires. The following lists some examples of when construction permits should be used.

1. Highway Cuts. Construction permits may be used on occasion for very small areas at the tops of cuts that may be returned for the use of the landowner.

2. Snow Slopes. Initially r/w is to be designed for snow slopes. However, construction permits may be used for identified snow slopes at an 11:1 grade from the edge of the pavement if requested or documented in project reports. These areas can then be top soiled, seeded and returned to the use of the owner.

3. Approaches. Construction permits are not needed to build approaches beyond the right-of-way line with the exception of railroad property where all approach work is done within a construction permit, easement, or license.

4. Irrigation Ditches. Construction permits may be used to realign or reconstruct irrigation ditches outside the right-of-way, if that is the only owner served by the ditch. See Figure 7A in Appendix A.

5. Slope Flattening. Construction permits may be used in areas of slope flattening, if the material is needed for the road only. The owner must be aware of this, agree to it, and is paid for the material removed. This is to be documented in the right-of-way agreement.

23-6.5 Wetlands

Wetlands are acquired as part of Environmental Services' Wetland Mitigation Program. These areas are identified by Environmental Services. A wetland may either be purchased in fee or as an easement. A certificate of survey is prepared for wetlands that do not adjoin the highway right-of-way. If the wetland area does adjoin the highway right-of-way, it is designed much like other easements and dimensions are from the highway centerline. A parcel number is assigned to the wetland area as the parcel number it is being acquired from with a W suffix. See Figure 5A in Appendix A.

23-6.6 Geopak

Complete Section 3 – Calculating Coordinates for R/W Breaks and R/W Baseline in the ***Geopak 2004 R/W Procedures Manual***. Coordinates need to be calculated for all new

Revised: 1/17/17

r/w, easement, license and construction permit breaks. Existing found r/w monuments may need coordinates calculated in various situations, as discussed in Section 23-6.7.

23-6.7 R/W, Easement, and Construction Permit Callouts

Placing calls on new right-of-way and easement breaks can be accomplished with DP save. Refer to Section 4 of the ***Geopak 2004 R/W Procedures Manual***. For additional callouts, use the cells from the "RWMET.cel or RW.cel" libraries. All callouts should be placed perpendicular to the centerline.

23-6.7.1 New R/W Callouts

Use the following procedures for new r/w callouts:

1. At any point where the existing right-of-way or easement is intersected by the new right-of-way line, the call is "EX. R/W = R/W" or "EX. EASE. = R/W". If you have a survey that identifies the existing right-of-way line, show a station and offset calculated following the appropriate Geopak procedures. If the existing right-of-way is not monumented, or the monuments have not been tied by survey, you can assign a station or offset but not both. See Figure 8A in Appendix A.

2. At any point where the new r/w line intersects the existing r/w or existing easement, place the call: "R/W = EX. R/W" as well as the station and offset if you have sufficient survey. If you do not have a survey identifying the existing line, the new r/w call is "R/W = EX. R/W" (or "EASE.") with a station or offset, not both. Either you know where the existing line is, or you don't. If you have many of these situations, then obviously the right-of-way was not previously retraced. Request a supplemental survey to tie the existing r/w. See Figure 8A in Appendix A.

3. Found and calculated monuments are given a station and offset to indicate there is solid survey information to locate the new right-of-way line. Calculate the station and offset of found and calculated right-of-way monuments within the project limits before and after proposed right-of-way ties into existing right-of-way. It is optional to place additional callouts to assist construction with staking and fencing. Include a description of the monument in the callout (i.e. "FND R/W MON.", "CALC", etc.) The plan sheet should reference the retracement survey and recording data.

Revised: 1/17/17

4. At the station where new acquisition begins for the project (e.g., right-of-way, easement, construction permit), add the call “BEG. ACQUISITION RT.” or “BEG. ACQUISITION LT.”, as the case may be (cell – “BEGACQ”).

5. At the station where new acquisition ends for the project (e.g., right-of-way, easement, construction permit), add the call “END ACQUISITION RT.” or “END ACQUISITION LT.”, as the case may be (cell – “ENDACQ”).

6. At all right-of-way breaks, the station and offset from centerline are to be called out. Calls are to be added to the beginning and end of both sides of spiral curves (i.e., TS, SC, CS, ST) on plans. Remember the right-of-way line between the TS and SC and the CS and ST is a chord, not a line parallel to the spiral. This chord creates a break in the right-of-way line. These calls are not needed on simple curves. There should not be any r/w breaks on these chords, as they cannot be stationed. Be sure that you have drawn in a chord in the strip map file; do not copy the spiral parallel. An astute field crew will notice a spiral on the right-of-way line and call you up asking what they are supposed to stake – the chord or the spiral.

7. New right-of-way widths are to be indicated on each side at the end of every sheet with +00 for the station and the offset. No notation is needed if the sheet ends on a taper. Use the cell “PLUSLT” or “PLUSRT”.

8. See Section 23-8 for information on placing callouts on railroad parcels.

23-6.7.2 New Easement/Construction Permit Calls & Dimensions

Easements and construction permits are both labeled in the same manner. The only differences would be the use of the text “EASE.” or “CONST. PMT.” Consider the following:

1. If the design is along a new right-of-way line, the dimension should be shown from the new r/w line. See Figure 23-6 for an example.

Revised: 1/17/17

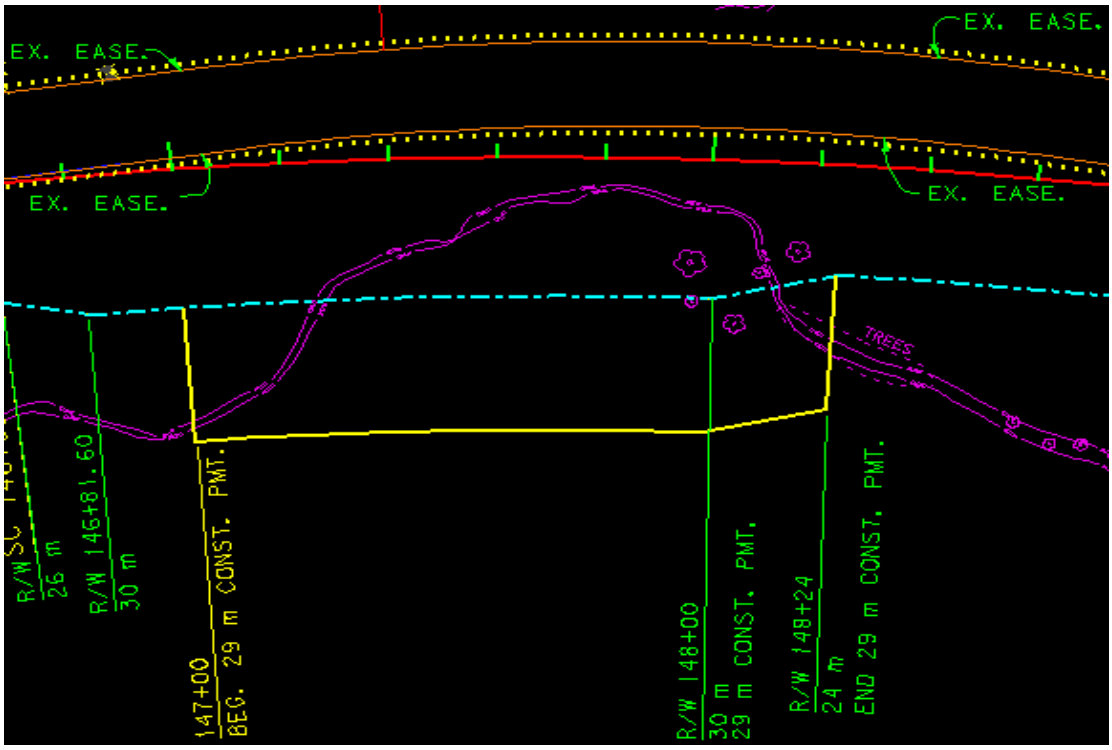

Figure 23-6

2. If the design is along the existing right-of-way/easement line and a retracement survey identifying the existing right-of-way line was not completed, always dimension from the centerline as shown in Figure 23-7.

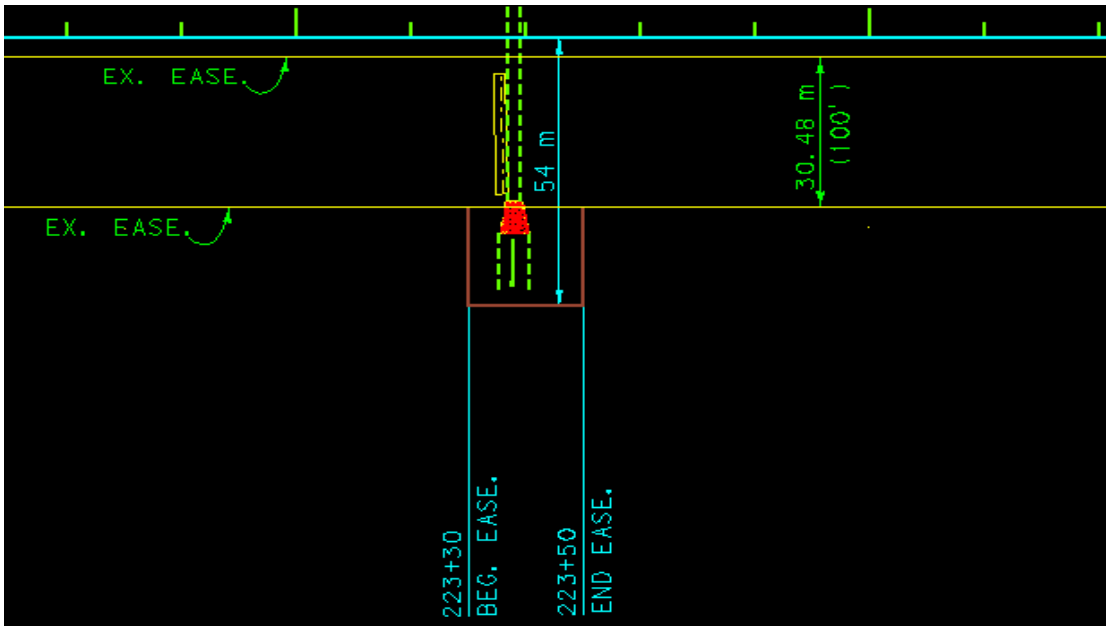

Figure 23-7

Revised: 1/17/17

3. If the design is along an existing r/w or easement line that has been identified by survey, you may dimension from the existing line, as shown in Figure 23-8; however, it is preferable to dimension from the centerline.

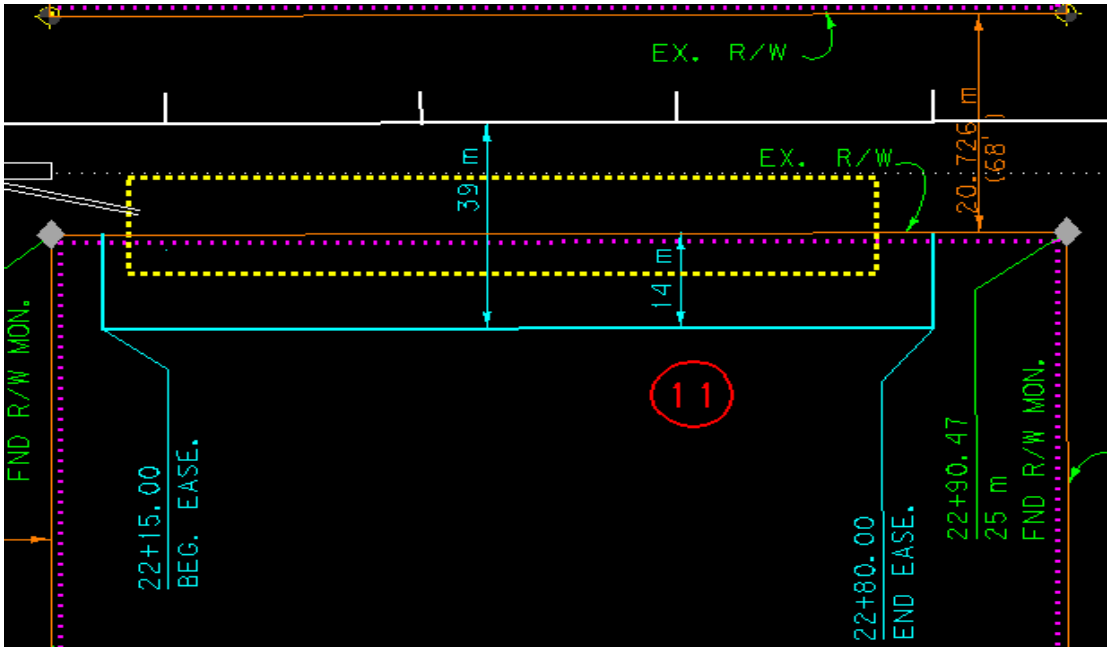

Figure 23-8

Revised: 1/17/17

23-7 ACCESS CONTROL

Access management is the process of managing the points of access to highway facilities through the use of access control. The purpose of access management is to maintain the flow of traffic and the functional integrity of the highway, enhance public safety, preserve the public's investment in the highway, reduce future maintenance costs and permit highway expansion on existing locations.

Control of access is divided into three categories:

1. Full Access Control. Access is allowed only at specified interchanges or at specified public road approaches (e.g., Interstate highways).

2. Limited Access Control. Access is allowed at specified public roads or streets or at private driveways, as specified.

3. Regulated Access. Access is managed through the granting of revocable permits to private parties to construct and maintain an approach.

The r/w plans deal with only full and limited access control. The recommendation for control of access may be specified in the environmental document and is determined at the preliminary field review and included in the Preliminary Field Review Report. The Scope of Work Report will contain recommendations regarding the degree and extent of control of access.

An access control study is prepared by the R/W Bureau during the development of the project and is used to produce an access control plan detailing recommendations on the number and spacing of public and private approaches.

The Highway Commission will pass a resolution declaring the project or portions thereof to be a controlled access project, which is recorded at the County Clerk and Recorders Office. The recording information is included on the first plan sheet or anywhere near the beginning of the project where there is space for it.

For more detailed information on access control, see MDT's ***Access Management Plan,*** April 1992. While some of the information in this plan is outdated, much of the process remains the same.

Revised: 1/17/17

23-7.1 Access Control Limits

Access control limits are identified on the plans in the plan sheet file. The access control limits generally equal the new r/w line, but may vary where a frontage road exists. The access control limits need to be shown between the frontage road and the highway, if a frontage road is located within the new r/w. If new access control does not fall on the existing or new right-of-way line, it must be called out and dimensioned. For those projects having existing access control, it is also shown as it applies. Grey scale existing access control where it is being replaced with new access control. Different symbolization is used for the different types of access control, as shown in Figure 23-9.

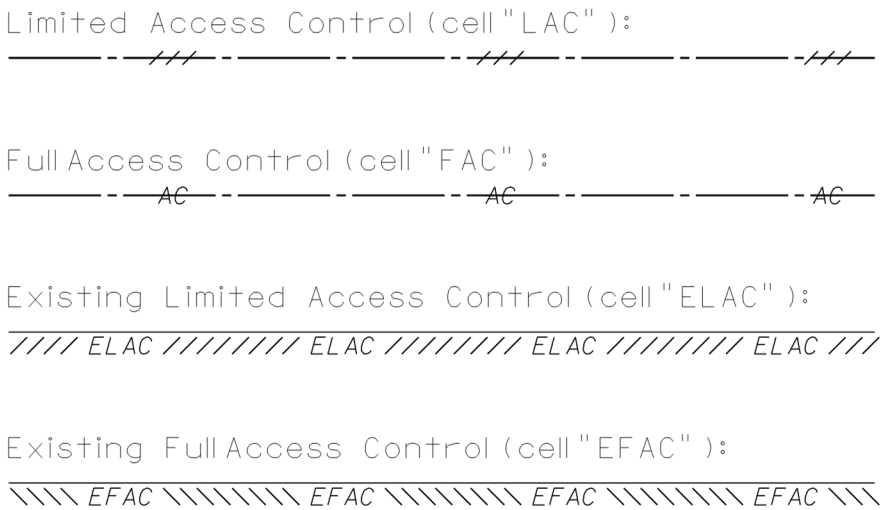

ACCESS CONTROL SYMBOLIZATION

Figure 23-9

23-7.2 Approaches, Access Roads and Frontage Roads

Approaches are designed by Road Design at specific stations based on recommendations included in the access control plan. All new approaches, access roads and frontage roads are shown on the r/w plans, including approaches from frontage roads. The access control line is not to be broken at approach locations, not even for intersecting public roads.

Types of approaches include:

1. Farm Field Approach. An approach to be used for access to agricultural lands (e.g., farm fields) only.

Revised: 1/17/17

2. Private Approach. An approach allowing access, by one or more persons, to a limited access control facility from private property, rather than a dedicated public roadway. Can be used for residential, commercial or industrial purposes.

3. Public Approach. A connection from a dedicated street, road, alley or other dedicated public roadway to a highway facility.

23-7.2.1 Approach Frame

All approaches, except those approaches designed from a frontage road, are further identified individually within an approach frame placed on each plan sheet showing an approach (cell “APPFR2”). The parcels served, number of approaches, left or right to designate the appropriate side, station and type of each approach should be defined. Special notes can be placed to the side of the frame. An example approach frame is shown in Figure 23-10.

Approach stations called out in the Road Approach frame should be consistent with the approach stations shown on the construction plans.

ROAD APPROACHES

PARCELS SERVED	SIDE	FARM FIELD (1),(2) STATION	PRIVATE (2) STATION	PUBLIC SIDE	PUBLIC STATION
7	RT		* 12+82		
9	RT		* 12+82		
9	LT		13+25		

(1) FARM FIELD APPROACH FOR AGRICULTURAL USE ONLY
(2) ROAD APPROACH LOCATIONS FIXED
* JOINT USE WITH OTHER PARCEL AT SAME STATION

APPROACH FRAME

Figure 23-10

23-7.3 Access Control Involvement

A parcel may not have any involvement other than access control. When this is the situation, the parcel is marked as Access Control Only on the ownership sheet. A parcel is considered an access control parcel when:

- it is adjacent to the existing or proposed r/w; and

Revised: 1/17/17

- the proposed access control line is between the parcel remainder and the access controlled facility, even if the access control line is not equal to the r/w line.

If in doubt, contact the Access Management Manager in the R/W Bureau.

Revised: 1/17/17

23-8 R/W PLAN SPECIAL REQUIREMENTS

There are special considerations for preparing right-of-way plans when DNRC, U.S. Government, Tribal Indian, and Railroad lands are involved. MDT can only obtain easements from railroad and government lands for road purposes, but the new easement is shown and called-out as right-of-way to differentiate it from easements for county road crossings, culverts, drainage ditches, etc. See Chapter 25 for special requirements when preparing deeds and exhibits on the following described lands.

23-8.1 DNRC State of Montana

State land blocks (cell "STBLK") are included on the plan sheets with areas calculated for every 1/16 section, except for navigable riverbed parcels. See Figure 10A in Appendix A. Consider the following:

1. Unless other information is available, each 1/16 section is assumed to contain 40 acres.

2. If there is no document supporting the existing easement, the entire area must be purchased. Gross area would equal the net area and existing easement will be zero.

3. When a metric area is converted to English within the state land block, the English area may equal 0.00 AC. In this situation, it is necessary to enter 0.01 AC (e.g., 0.002 ha = 0.00 AC, but 0.01 AC should be entered).

23-8.2 United States of America (BLM, BOR & U.S. Forest Service)

On BLM/BOR, do not design both construction permits and easement on the same parcel whenever possible. It is preferred the design is either all easement or all construction permits. On U.S.F.S. property design all acquisition as r/w. Separate easements in the name of someone other than MDT can still be designed as needed. Coordinate with the Acquisition/Special Programs Sections.

23-8.3 Railroad

1. Ownership Sheet. The 'Ex. Ease. Area' shall not be identified for Railroad parcels in the ownership block.

Revised: 1/17/17

2. R/W Design. When designing right-of-way that extends onto railroad property, the following parameters must be observed:

- desirable minimum distance from the centerline of a mainline railroad track to the new right-of-way is 100 feet (30.48 m), absolute minimum is 50 feet (15.24 m);
- desirable minimum distance from the centerline of a branch line railroad track to the new right-of-way line is 50 feet (15.24 m), absolute minimum is 25 feet (7.62 m);
- minimum distance from the centerline of any railroad track to a construction permit is 7 feet (2.13 m);
- all construction work, including approaches, within railroad right-of-way requires an easement, construction permit, or license.
- any permanent highway structure, which requires maintenance (e.g. fill, culverts, riprap) on railroad right-of-way, requires an easement or at the very least a license;
- sometimes a special use license is acquired for certain items such as guardrail. This item is negotiated by the railroad liaison in the Utility Section. Such licenses require an area and a note on the plans.

  Note: Utilities cannot relocate within a license area.

3. Highway Encroachment. If the highway encroaches on railroad r/w the following callouts are placed on the plan sheets:

- where the highway centerline intersects the railroad centerline, show the highway stationing and the railroad stationing;
- show the angle between the highway centerline and the railroad centerline;
- highway and railroad stationing is to be included at the intersections of highway right-of-way, easement, license and construction permit lines and railroad right-of-way lines; and
- on parallel encroachments, all highway design breaks within or adjoining railroad right-of-way must have railroad stationing and distances from railroad centerline on the plans. This includes right-of-way, construction permits, easements and licenses.

Revised: 1/17/17

There should be some railroad features tied by survey from which you can determine railroad stationing. Bridge ends, culverts, signals, etc., all have stationing on railroad plans and are easily identified on the ground. The topographic survey should include the centerline of the main track. See Figure 1A - Drummond Station Plat in Appendix A.

If you do not have good survey information, then you must scale the railroad stationing. Place the note “SCALED” on the calls, and scale to the nearest foot.

Keep in mind that railroad curves are defined by chord definition, which is defined and applicable only using English units of measurement; the radius of a 1° curve = 5729.648 ft, R is the curve radius in feet, and :

$$R = \frac{50}{\sin \frac{1}{2}D}$$

Also, check the railroad plans. Sometimes they purchased their right-of-way parallel to the tangent, not parallel to the spiral.

23-8.4 MDT Maintenance Sites

These sites are located along the highway right-of-way. Do not show new right-of-way through these parcels. Stop the acquisition at the property line with the call “R/W = PROPERTY LINE” and the offset. If this parcel is ever sold as excess land, the r/w line will be established through the parcel before it is conveyed.