BIG TIMBER AIRPORT

Branch: 25A **APRON** **A-1**

Length: 200 LF **Width:** 200 LF **Area:** 40,000 SF **Last Const. :** 1996 **Family:** 9ACAM
From: ENTIRE APRON **To:** **Surface:** AC

Inspections

Samples Surveyed: 4 **Total Samples:** 8 **Last Inspection Date:** 8/25/2009 **PCI: 61**

Sample # 1 **Area:** 5000 SF

Distress Description	Severity	Quantity
WEATHERING/RAVELING	L	350 SF
LONGITUDINAL/TRANSVERSE CRACKING	L	51 LF
LONGITUDINAL/TRANSVERSE CRACKING	M	39 LF
WEATHERING/RAVELING	M	100 SF
BLEEDING	N	73 SF
DEPRESSION	L	4 SF
WEATHERING/RAVELING	H	2 SF

Sample # 3 **Area:** 5000 SF

Distress Description	Severity	Quantity
WEATHERING/RAVELING	L	300 SF
PATCHING	L	250 SF
BLEEDING	N	150 SF
WEATHERING/RAVELING	M	87 SF
LONGITUDINAL/TRANSVERSE CRACKING	L	21 LF
LONGITUDINAL/TRANSVERSE CRACKING	M	14 LF
OIL SPILLAGE	N	15 SF

Sample # 5 **Area:** 5000 SF

Distress Description	Severity	Quantity
LONGITUDINAL/TRANSVERSE CRACKING	M	101 LF
WEATHERING/RAVELING	L	300 SF
LONGITUDINAL/TRANSVERSE CRACKING	L	27 LF
WEATHERING/RAVELING	M	75 SF
OIL SPILLAGE	N	29 SF
PATCHING	L	8 SF
DEPRESSION	M	5 SF
DEPRESSION	L	4 SF
WEATHERING/RAVELING	H	3 SF

Sample # 8 **Area:** 5000 SF

Distress Description	Severity	Quantity
WEATHERING/RAVELING	L	350 SF
LONGITUDINAL/TRANSVERSE CRACKING	L	85 LF
LONGITUDINAL/TRANSVERSE CRACKING	M	64 LF
WEATHERING/RAVELING	M	100 SF
DEPRESSION	L	8 SF
WEATHERING/RAVELING	H	2 SF

Extrapolated Distress Quantities*

Distress Description	Severity	Quantity	Density	Deduct
LONGITUDINAL/TRANSVERSE CRACKING	M	436 LF	1.09 %	11.68
WEATHERING/RAVELING	M	724 SF	1.81 %	9.93
WEATHERING/RAVELING	L	2600 SF	6.50 %	7.85
WEATHERING/RAVELING	H	14 SF	0.03 %	6.00
BLEEDING	N	446 SF	1.11 %	5.99
DEPRESSION	M	10 SF	0.02 %	5.20
LONGITUDINAL/TRANSVERSE CRACKING	L	368 LF	0.92 %	4.78
PATCHING	L	516 SF	1.29 %	4.17
OIL SPILLAGE	N	88 SF	0.22 %	2.59
DEPRESSION	L	32 SF	0.08 %	0.30

* Multiple deduct values are scaled down from their algebraic sum to keep the model consistent with experimental data.

Percent of Deduct Values Based on Distress Mechanism

0.0 **% Load** 76.0 **% Climate/Durability** 24.0 **% Other**

BIG TIMBER AIRPORT

Branch: 25A **APRON** **A-2**

Length: 0 LF **Width:** 0 LF **Area:** 23,750 SF **Last Const. :** 1996 **Family:** 9ACAM
From: A-1 **To:** T-2 **Surface:** AC

Inspections

Samples Surveyed: 3 **Total Samples:** 5 **Last Inspection Date:** 8/25/2009 **PCI: 61**

Sample # 1 **Area:** 4914 SF

Distress Description	Severity	Quantity
WEATHERING/RAVELING	L	250 SF
LONGITUDINAL/TRANSVERSE CRACKING	L	42 LF
LONGITUDINAL/TRANSVERSE CRACKING	M	25 LF
WEATHERING/RAVELING	M	77 SF
DEPRESSION	L	30 SF
OIL SPILLAGE	N	19 SF
PATCHING	L	15 SF
DEPRESSION	M	10 SF

Sample # 2 **Area:** 4914 SF

Distress Description	Severity	Quantity
WEATHERING/RAVELING	L	250 SF
LONGITUDINAL/TRANSVERSE CRACKING	L	23 LF
LONGITUDINAL/TRANSVERSE CRACKING	M	22 LF
OIL SPILLAGE	N	70 SF
WEATHERING/RAVELING	M	67 SF
WEATHERING/RAVELING	H	11 SF
PATCHING	L	7 SF
DEPRESSION	M	6 SF
DEPRESSION	L	3 SF

Sample # 5 **Area:** 5100 SF

Distress Description	Severity	Quantity
WEATHERING/RAVELING	L	200 SF
WEATHERING/RAVELING	M	100 SF
BLEEDING	N	60 SF
LONGITUDINAL/TRANSVERSE CRACKING	M	18 LF
LONGITUDINAL/TRANSVERSE CRACKING	L	17 LF
WEATHERING/RAVELING	H	13 SF
DEPRESSION	L	4 SF
DEPRESSION	M	2 SF

Extrapolated Distress Quantities*

Distress Description	Severity	Quantity	Density	Deduct
WEATHERING/RAVELING	M	388 SF	1.63 %	9.53
LONGITUDINAL/TRANSVERSE CRACKING	M	103 LF	0.44 %	7.79
WEATHERING/RAVELING	H	38 SF	0.16 %	7.55
WEATHERING/RAVELING	L	1114 SF	4.69 %	6.56
DEPRESSION	M	29 SF	0.12 %	5.23
LONGITUDINAL/TRANSVERSE CRACKING	L	130 LF	0.55 %	4.14
OIL SPILLAGE	N	142 SF	0.60 %	3.16
BLEEDING	N	95 SF	0.40 %	2.69
PATCHING	L	35 SF	0.15 %	2.01
DEPRESSION	L	59 SF	0.25 %	1.18

* Multiple deduct values are scaled down from their algebraic sum to keep the model consistent with experimental data.

Percent of Deduct Values Based on Distress Mechanism

0.0 **% Load** 75.0 **% Climate/Durability** 25.0 **% Other**

BIG TIMBER AIRPORT

Branch: 25R **RUNWAY** **R-1**

Length: 4,650 LF **Width:** 75 LF **Area:** 348,750 SF **Last Const. :** 1996 **Family:** 9ACRMU

From: STA 0+00, BEGIN RWY 6-24 **To:** STA 46+50, END RWY 6-24 **Surface:** AC

Inspections

Samples Surveyed: 7 **Total Samples:** 72 **Last Inspection Date:** 8/25/2009 **PCI: 67**

Sample # 2 **Area:** 4875 SF

Distress Description	Severity	Quantity
LONGITUDINAL/TRANSVERSE CRACKING	L	118 LF
WEATHERING/RAVELING	L	343 SF
WEATHERING/RAVELING	M	98 SF
LONGITUDINAL/TRANSVERSE CRACKING	M	12 LF
WEATHERING/RAVELING	H	4 SF

Sample # 13 **Area:** 4875 SF

Distress Description	Severity	Quantity
WEATHERING/RAVELING	L	343 SF
LONGITUDINAL/TRANSVERSE CRACKING	L	79 LF
LONGITUDINAL/TRANSVERSE CRACKING	M	48 LF
WEATHERING/RAVELING	M	98 SF

Sample # 24 **Area:** 4875 SF

Distress Description	Severity	Quantity
WEATHERING/RAVELING	L	343 SF
LONGITUDINAL/TRANSVERSE CRACKING	L	104 LF
LONGITUDINAL/TRANSVERSE CRACKING	M	39 LF
WEATHERING/RAVELING	M	98 SF
DEPRESSION	L	54 SF
ALLIGATOR CRACKING	L	35 SF
DEPRESSION	M	22 SF

Sample # 35 **Area:** 4875 SF

Distress Description	Severity	Quantity
WEATHERING/RAVELING	L	343 SF
LONGITUDINAL/TRANSVERSE CRACKING	L	68 LF
WEATHERING/RAVELING	M	98 SF
LONGITUDINAL/TRANSVERSE CRACKING	M	3 LF
PATCHING	L	1 SF

Sample # 46 **Area:** 4875 SF

Distress Description	Severity	Quantity
LONGITUDINAL/TRANSVERSE CRACKING	L	119 LF
WEATHERING/RAVELING	L	343 SF
WEATHERING/RAVELING	M	98 SF
DEPRESSION	L	12 SF
ALLIGATOR CRACKING	L	12 SF

Sample # 57 **Area:** 4875 SF

Distress Description	Severity	Quantity
WEATHERING/RAVELING	L	343 SF
LONGITUDINAL/TRANSVERSE CRACKING	L	88 LF
LONGITUDINAL/TRANSVERSE CRACKING	M	65 LF
WEATHERING/RAVELING	M	98 SF
DEPRESSION	L	65 SF
ALLIGATOR CRACKING	L	5 SF

Sample # 68 **Area:** 4875 SF

Distress Description	Severity	Quantity
WEATHERING/RAVELING	L	343 SF
LONGITUDINAL/TRANSVERSE CRACKING	M	81 LF
LONGITUDINAL/TRANSVERSE CRACKING	L	70 LF
WEATHERING/RAVELING	M	98 SF
LONGITUDINAL/TRANSVERSE CRACKING	H	14 LF
DEPRESSION	L	33 SF

Extrapolated Distress Quantities*

Distress Description	Severity	Quantity	Density	Deduct
WEATHERING/RAVELING	M	7011 SF	2.01 %	10.36
LONGITUDINAL/TRANSVERSE CRACKING	M	2535 LF	0.73 %	9.77
WEATHERING/RAVELING	L	24537 SF	7.04 %	8.19
ALLIGATOR CRACKING	L	531 SF	0.15 %	7.59
LONGITUDINAL/TRANSVERSE CRACKING	H	143 LF	0.04 %	7.50
LONGITUDINAL/TRANSVERSE CRACKING	L	6604 LF	1.89 %	7.13

BIG TIMBER AIRPORT

Branch: 25R **RUNWAY** **R-1**

Extrapolated Distress Quantities*

Distress Description	Severity	Quantity	Density	Deduct
WEATHERING/RAVELING	H	41 SF	0.01 **%**	6.00
DEPRESSION	M	225 SF	0.06 **%**	5.20
DEPRESSION	L	1676 SF	0.48 **%**	3.14
PATCHING	L	10 SF	0.00 **%**	2.00

* Multiple deduct values are scaled down from their algebraic sum to keep the model consistent with experimental data.

Percent of Deduct Values Based on Distress Mechanism

11.0 **% Load** 77.0 **% Climate/Durability** 12.0 **% Other**

BIG TIMBER AIRPORT

Branch: 25R **RUNWAY** **R-2**

Length: 635 LF **Width:** 75 LF **Area:** 47,625 SF **Last Const. :** 1996 **Family:** 9ACRMU
From: R-1 **To:** T-3 **Surface:** AC

Inspections

Samples Surveyed: 4 **Total Samples:** 9 **Last Inspection Date:** 8/25/2009 **PCI: 71**

Sample # 3 **Area:** 4875 SF

Distress Description	Severity	Quantity
LONGITUDINAL/TRANSVERSE CRACKING	L	138 LF
WEATHERING/RAVELING	L	343 SF
WEATHERING/RAVELING	M	98 SF
LONGITUDINAL/TRANSVERSE CRACKING	M	25 LF
DEPRESSION	L	10 SF

Sample # 5 **Area:** 4875 SF

Distress Description	Severity	Quantity
WEATHERING/RAVELING	L	343 SF
LONGITUDINAL/TRANSVERSE CRACKING	M	88 LF
LONGITUDINAL/TRANSVERSE CRACKING	L	78 LF
WEATHERING/RAVELING	M	98 SF
DEPRESSION	L	8 SF

Sample # 7 **Area:** 4875 SF

Distress Description	Severity	Quantity
LONGITUDINAL/TRANSVERSE CRACKING	L	141 LF
WEATHERING/RAVELING	L	343 SF
LONGITUDINAL/TRANSVERSE CRACKING	M	46 LF
WEATHERING/RAVELING	M	98 SF
DEPRESSION	L	19 SF

Sample # 9 **Area:** 4875 SF

Distress Description	Severity	Quantity
WEATHERING/RAVELING	L	343 SF
LONGITUDINAL/TRANSVERSE CRACKING	L	102 LF
LONGITUDINAL/TRANSVERSE CRACKING	M	53 LF
WEATHERING/RAVELING	M	158 SF
WEATHERING/RAVELING	H	24 SF

Extrapolated Distress Quantities*

Distress Description	Severity	Quantity	Density	Deduct
LONGITUDINAL/TRANSVERSE CRACKING	M	518 LF	1.09 %	11.67
WEATHERING/RAVELING	M	1104 SF	2.32 %	10.99
LONGITUDINAL/TRANSVERSE CRACKING	L	1121 LF	2.35 %	8.35
WEATHERING/RAVELING	L	3351 SF	7.04 %	8.19
WEATHERING/RAVELING	H	59 SF	0.12 %	6.88
DEPRESSION	L	90 SF	0.19 %	0.70

* Multiple deduct values are scaled down from their algebraic sum to keep the model consistent with experimental data.

Percent of Deduct Values Based on Distress Mechanism

0.0 **% Load** 98.0 **% Climate/Durability** 2.0 **% Other**

BIG TIMBER AIRPORT

Branch: 25T **TAXIWAY** **T-1**

Length: 155 LF **Width:** 30 LF **Area:** 4,650 SF **Last Const. :** 1996 **Family:** 9ACRMU

From: R-1 **To:** APRON **Surface:** AC

Inspections

Samples Surveyed: 1 **Total Samples:** 1 **Last Inspection Date:** 8/25/2009 **PCI: 53**

Sample # 1 **Area:** 4650 SF

Distress Description	Severity	Quantity
LONGITUDINAL/TRANSVERSE CRACKING	L	165 LF
LONGITUDINAL/TRANSVERSE CRACKING	M	152 LF
WEATHERING/RAVELING	L	325 SF
WEATHERING/RAVELING	M	93 SF
BLEEDING	N	35 SF
DEPRESSION	L	16 SF
WEATHERING/RAVELING	H	4 SF

Extrapolated Distress Quantities*

Distress Description	Severity	Quantity	Density	Deduct
LONGITUDINAL/TRANSVERSE CRACKING	M	152 LF	3.27 %	20.42
LONGITUDINAL/TRANSVERSE CRACKING	L	165 LF	3.55 %	11.43
WEATHERING/RAVELING	M	93 SF	2.00 %	10.34
WEATHERING/RAVELING	L	325 SF	6.99 %	8.16
WEATHERING/RAVELING	H	4 SF	0.09 %	6.00
BLEEDING	N	35 SF	0.75 %	4.22
DEPRESSION	L	16 SF	0.34 %	2.01

* Multiple deduct values are scaled down from their algebraic sum to keep the model consistent with experimental data.

Percent of Deduct Values Based on Distress Mechanism

0.0 **% Load** 90.0 **% Climate/Durability** 10.0 **% Other**

BIG TIMBER AIRPORT

Branch: 25T **TAXIWAY** **T-2**

Length: 1,320 LF **Width:** 30 LF **Area:** 39,600 SF **Last Const. :** 1996 **Family:** 9ACRMU
From: RUNWAY STATION 19+50 **To:** NORTH **Surface:** AC

Inspections

Samples Surveyed: 4 **Total Samples:** 7 **Last Inspection Date:** 8/25/2009 **PCI: 55**

Sample # 2 **Area:** 5040 SF

Distress Description	Severity	Quantity
LONGITUDINAL/TRANSVERSE CRACKING	M	218 LF
LONGITUDINAL/TRANSVERSE CRACKING	L	148 LF
WEATHERING/RAVELING	L	350 SF
WEATHERING/RAVELING	M	100 SF
BLEEDING	N	36 SF
DEPRESSION	L	24 SF
DEPRESSION	M	15 SF

Sample # 3 **Area:** 5040 SF

Distress Description	Severity	Quantity
LONGITUDINAL/TRANSVERSE CRACKING	L	107 LF
WEATHERING/RAVELING	L	350 SF
LONGITUDINAL/TRANSVERSE CRACKING	M	51 LF
WEATHERING/RAVELING	M	125 SF
WEATHERING/RAVELING	H	18 SF
DEPRESSION	L	12 SF
BLEEDING	N	10 SF

Sample # 5 **Area:** 5040 SF

Distress Description	Severity	Quantity
WEATHERING/RAVELING	L	350 SF
LONGITUDINAL/TRANSVERSE CRACKING	M	76 LF
LONGITUDINAL/TRANSVERSE CRACKING	L	74 LF
WEATHERING/RAVELING	M	115 SF
DEPRESSION	L	16 SF
BLEEDING	N	11 SF
WEATHERING/RAVELING	H	3 SF
DEPRESSION	M	2 SF

Sample # 7 **Area:** 5040 SF

Distress Description	Severity	Quantity
LONGITUDINAL/TRANSVERSE CRACKING	L	307 LF
LONGITUDINAL/TRANSVERSE CRACKING	M	108 LF
WEATHERING/RAVELING	L	350 SF
WEATHERING/RAVELING	M	200 SF
BLEEDING	N	115 SF
DEPRESSION	L	75 SF
ALLIGATOR CRACKING	L	12 SF
WEATHERING/RAVELING	H	9 SF
OIL SPILLAGE	N	8 SF
SWELLING	L	3 SF

Extrapolated Distress Quantities*

Distress Description	Severity	Quantity	Density	Deduct
LONGITUDINAL/TRANSVERSE CRACKING	M	890 LF	2.25 %	16.70
WEATHERING/RAVELING	M	1061 SF	2.68 %	11.67
LONGITUDINAL/TRANSVERSE CRACKING	L	1250 LF	3.16 %	10.44
WEATHERING/RAVELING	L	2750 SF	6.94 %	8.13
WEATHERING/RAVELING	H	59 SF	0.15 %	7.39
ALLIGATOR CRACKING	L	24 SF	0.06 %	7.00
DEPRESSION	M	33 SF	0.08 %	5.20
BLEEDING	N	338 SF	0.85 %	4.68
DEPRESSION	L	249 SF	0.63 %	4.27
OIL SPILLAGE	N	16 SF	0.04 %	2.00
SWELLING	L	6 SF	0.01 %	1.00

* Multiple deduct values are scaled down from their algebraic sum to keep the model consistent with experimental data.

Percent of Deduct Values Based on Distress Mechanism

9.0 **% Load** 69.0 **% Climate/Durability** 22.0 **% Other**

BIG TIMBER AIRPORT

Branch: 25T **TAXIWAY** **T-3**

Length: 275 LF **Width:** 50 LF **Area:** 13,750 SF **Last Const. :** 1996 **Family:** 9ACRMU

From: Turnarounds **To:** **Surface:** AC

Inspections

Samples Surveyed: 3 **Total Samples:** 4 **Last Inspection Date:** 8/25/2009 **PCI: 73**

Sample # 2 **Area:** 3450 SF

Distress Description	Severity	Quantity
WEATHERING/RAVELING	L	175 SF
WEATHERING/RAVELING	M	140 SF
LONGITUDINAL/TRANSVERSE CRACKING	L	15 LF

Sample # 3 **Area:** 3450 SF

Distress Description	Severity	Quantity
LONGITUDINAL/TRANSVERSE CRACKING	L	137 LF
WEATHERING/RAVELING	L	245 SF
WEATHERING/RAVELING	M	70 SF
DEPRESSION	L	25 SF
WEATHERING/RAVELING	H	19 SF

Sample # 4 **Area:** 3450 SF

Distress Description	Severity	Quantity
LONGITUDINAL/TRANSVERSE CRACKING	L	96 LF
WEATHERING/RAVELING	L	245 SF
WEATHERING/RAVELING	M	70 SF
LONGITUDINAL/TRANSVERSE CRACKING	M	7 LF

Extrapolated Distress Quantities*

Distress Description	Severity	Quantity	Density	Deduct
WEATHERING/RAVELING	M	372 SF	2.71 %	11.72
LONGITUDINAL/TRANSVERSE CRACKING	L	330 LF	2.40 %	8.46
WEATHERING/RAVELING	L	883 SF	6.43 %	7.80
WEATHERING/RAVELING	H	25 SF	0.18 %	7.78
LONGITUDINAL/TRANSVERSE CRACKING	M	9 LF	0.07 %	4.00
DEPRESSION	L	33 SF	0.24 %	1.12

* Multiple deduct values are scaled down from their algebraic sum to keep the model consistent with experimental data.

Percent of Deduct Values Based on Distress Mechanism

0.0 **% Load** 97.0 **% Climate/Durability** 3.0 **% Other**

BIG TIMBER AIRPORT

Branch: 25T **TAXIWAY** **T-4**

Length: 2,439 LF **Width:** 35 LF **Area:** 85,365 SF **Last Const. :** 2003 **Family:** 9ACRMU
From: R-1 **To:** A-1 **Surface:** AC

Inspections

Samples Surveyed: 5 **Total Samples:** 17 **Last Inspection Date:** 8/25/2009 **PCI: 83**

Sample # 1 **Area:** 5040 SF

Distress Description	Severity	Quantity
WEATHERING/RAVELING	L	100 SF
WEATHERING/RAVELING	M	100 SF
LONGITUDINAL/TRANSVERSE CRACKING	L	7 LF

Sample # 5 **Area:** 5040 SF

Distress Description	Severity	Quantity
WEATHERING/RAVELING	L	424 SF
WEATHERING/RAVELING	M	75 SF
LONGITUDINAL/TRANSVERSE CRACKING	L	16 LF
PATCHING	L	3 SF

Sample # 9 **Area:** 5040 SF

Distress Description	Severity	Quantity
WEATHERING/RAVELING	L	100 SF
WEATHERING/RAVELING	M	100 SF

Sample # 13 **Area:** 5040 SF

Distress Description	Severity	Quantity
WEATHERING/RAVELING	L	100 SF
WEATHERING/RAVELING	M	75 SF
PATCHING	L	1 SF

Sample # 17 **Area:** 4900 SF

Distress Description	Severity	Quantity
WEATHERING/RAVELING	L	100 SF
WEATHERING/RAVELING	M	100 SF
LONGITUDINAL/TRANSVERSE CRACKING	L	28 LF

Extrapolated Distress Quantities*

Distress Description	Severity	Quantity	Density	Deduct
WEATHERING/RAVELING	M	1533 SF	1.80 %	9.90
WEATHERING/RAVELING	L	2807 SF	3.29 %	5.36
LONGITUDINAL/TRANSVERSE CRACKING	L	174 LF	0.20 %	3.13
PATCHING	L	14 SF	0.02 %	2.00

* Multiple deduct values are scaled down from their algebraic sum to keep the model consistent with experimental data.

Percent of Deduct Values Based on Distress Mechanism

0.0 **% Load** 100.0 **% Climate/Durability** 0.0 **% Other**

BIG TIMBER AIRPORT

Branch: 25T **TAXIWAY** **T-5**

Length: 1,350 LF **Width:** 25 LF **Area:** 35,020 SF **Last Const. :** 2003 **Family:** 9ACRMU

From: T-2 **To:** Hangars **Surface:** AC

Inspections

Samples Surveyed: 3 **Total Samples:** 6 **Last Inspection Date:** 8/25/2009 **PCI: 76**

Sample # 1 **Area:** 5125 SF

Distress Description	Severity	Quantity
WEATHERING/RAVELING	L	350 SF
WEATHERING/RAVELING	M	200 SF
OIL SPILLAGE	N	156 SF
DEPRESSION	L	8 SF
PATCHING	L	6 SF
WEATHERING/RAVELING	H	4 SF

Sample # 5 **Area:** 5125 SF

Distress Description	Severity	Quantity
WEATHERING/RAVELING	L	350 SF
WEATHERING/RAVELING	M	100 SF
WEATHERING/RAVELING	H	1 SF
OIL SPILLAGE	N	1 SF

Sample # 6 **Area:** 5125 SF

Distress Description	Severity	Quantity
WEATHERING/RAVELING	L	350 SF
WEATHERING/RAVELING	M	100 SF
DEPRESSION	L	20 SF
PATCHING	L	5 SF

Extrapolated Distress Quantities*

Distress Description	Severity	Quantity	Density	Deduct
WEATHERING/RAVELING	M	911 SF	2.60 %	11.53
WEATHERING/RAVELING	L	2392 SF	6.83 %	8.06
WEATHERING/RAVELING	H	11 SF	0.03 %	6.00
OIL SPILLAGE	N	358 SF	1.02 %	3.62
PATCHING	L	25 SF	0.07 %	2.00
DEPRESSION	L	64 SF	0.18 %	0.65

* Multiple deduct values are scaled down from their algebraic sum to keep the model consistent with experimental data.

Percent of Deduct Values Based on Distress Mechanism

0.0 **% Load** 87.0 **% Climate/Durability** 13.0 **% Other**

BIG TIMBER AIRPORT

FIRST YEAR LOCAL:2010 LOCAL REPAIR COST: $35,067

Section	Distress Description	Severity	Quantity	Work Description	Quantity	Cost	Policy
A-1	L & T CR	M	437 LF	Crack Sealing - AC	437 LF	$654	PREV.
A-1	DEPRESSION	M	10 SF	Patching - AC Deep	27 SF	$989	PREV.
A-1	OIL SPILLAGE	N	88 SF	Patching - AC Shallow	130 SF	$1,946	PREV.
A-2	L & T CR	M	104 LF	Crack Sealing - AC	104 LF	$155	PREV.
A-2	DEPRESSION	M	29 SF	Patching - AC Deep	55 SF	$2,005	PREV.
A-2	OIL SPILLAGE	N	142 SF	Patching - AC Shallow	194 SF	$2,902	PREV.
R-1	L & T CR	H	144 LF	Crack Sealing - AC	144 LF	$215	PREV.
R-1	L & T CR	M	2536 LF	Crack Sealing - AC	2536 LF	$3,803	PREV.
R-1	DEPRESSION	M	225 SF	Patching - AC Deep	290 SF	$10,700	PREV.
R-2	L & T CR	M	518 LF	Crack Sealing - AC	518 LF	$777	PREV.
T-1	L & T CR	M	153 LF	Crack Sealing - AC	153 LF	$228	PREV.
T-2	OIL SPILLAGE	N	16 SF	Patching - AC Shallow	36 SF	$535	PREV.
T-2	L & T CR	M	891 LF	Crack Sealing - AC	891 LF	$1,335	PREV.
T-2	DEPRESSION	M	34 SF	Patching - AC Deep	61 SF	$2,244	PREV.
T-3	L & T CR	M	10 LF	Crack Sealing - AC	10 LF	$14	PREV.
T-5	OIL SPILLAGE	N	358 SF	Patching - AC Shallow	438 SF	$6,566	PREV.

FIFTEEN YEAR PROJECTIONS: ESTIMATED AVERAGE ANNUAL COST: $158,765

PLAN YEAR: 2010 ESTIMATED COST: $691,269

SectionI	Maintenance	Local	Global	Major<Crit	Major>Crit	Total	PCI before	PCI after
A-1	Basic Prev.	$3,589				$3,589	60	60
A-2	Basic Prev.	$5,062				$5,062	60	60
R-1	Prev. & Thin AC	$14,717	$558,001			$572,719	66	79
R-2	Prev. & Thin AC	$777	$76,200			$76,977	70	82
T-1	Basic Prev.	$228				$228	52	52
T-2	Basic Prev.	$4,114				$4,114	54	54
T-3	Prev. & Thin AC	$14	$22,000			$22,014	72	84
T-5	Basic Prev.	$6,566				$6,566	75	75

PLAN YEAR: 2011 ESTIMATED COST: $19,972

SectionI	Maintenance	Local	Global	Major<Crit	Major>Crit	Total	PCI before	PCI after
A-1	Basic Prev.	$2,495				$2,495	57	57
A-2	Basic Prev.	$1,482				$1,482	57	57
R-1	Basic Prev.	$8,968				$8,968	76	76
R-2	Basic Prev.	$811				$811	80	80
T-1	Basic Prev.	$377				$377	50	50
T-2	Basic Prev.	$3,016				$3,016	52	52
T-3	Basic Prev.	$192				$192	82	82
T-4	Basic Prev.	$1,417				$1,417	80	80
T-5	Basic Prev.	$1,215				$1,215	73	73

PLAN YEAR: 2012 ESTIMATED COST: $33,245

SectionI	Maintenance	Local	Global	Major<Crit	Major>Crit	Total	PCI before	PCI after
A-1	Basic Prev.	$2,820				$2,820	54	54
A-2	Basic Prev.	$1,674				$1,674	54	54
R-1	Basic Prev.	$11,068				$11,068	74	74
R-2	Basic Prev.	$1,080				$1,080	78	78
T-1	Reconstruct			$9,802		$9,802	49	100
T-2	Basic Prev.	$3,215				$3,215	50	50
T-3	Basic Prev.	$251				$251	79	79
T-4	Basic Prev.	$1,898				$1,898	78	78
T-5	Basic Prev.	$1,438				$1,438	70	70

PLAN YEAR: 2013 ESTIMATED COST: $300,131

SectionI	Maintenance	Local	Global	Major<Crit	Major>Crit	Total	PCI before	PCI after
A-1	Basic Prev.	$3,158				$3,158	51	51
A-2	Basic Prev.	$1,875				$1,875	51	51
R-1	Basic Prev.	$13,258				$13,258	71	71
R-2	Basic Prev.	$1,361				$1,361	75	75
T-2	Reconstruct			$83,571		$83,571	49	100
T-3	Basic Prev.	$329				$329	77	77
T-4	Prev. & Thin AC	$2,400	$136,584			$138,984	75	87
T-5	Prev. & Thin AC	$1,562	$56,032			$57,594	67	80

BIG TIMBER AIRPORT

PLAN YEAR: 2014 ESTIMATED COST: $154,990

SectionI	Maintenance	Local	Global	Major<Crit	Major>Crit	Total	PCI before	PCI after
A-1	Reconstruct			$85,568		$85,568	48	100
A-2	Reconstruct			$50,806		$50,806	48	100
R-1	Basic Prev.	$14,975				$14,975	69	69
R-2	Basic Prev.	$1,653				$1,653	73	73
T-3	Basic Prev.	$411				$411	75	75
T-4	Basic Prev.	$784				$784	84	84
T-5	Basic Prev.	$793				$793	78	78

PLAN YEAR: 2015 ESTIMATED COST: $20,756

SectionI	Maintenance	Local	Global	Major<Crit	Major>Crit	Total	PCI before	PCI after
R-1	Basic Prev.	$16,197				$16,197	66	66
R-2	Basic Prev.	$1,957				$1,957	70	70
T-1	Basic Prev.	$09				$9	89	89
T-3	Basic Prev.	$496				$496	72	72
T-4	Basic Prev.	$1,098				$1,098	82	82
T-5	Basic Prev.	$999				$999	75	75

PLAN YEAR: 2016 ESTIMATED COST: $22,844

SectionI	Maintenance	Local	Global	Major<Crit	Major>Crit	Total	PCI before	PCI after
R-1	Basic Prev.	$17,408				$17,408	63	63
R-2	Basic Prev.	$2,124				$2,124	67	67
T-1	Basic Prev.	$29				$29	86	86
T-2	Basic Prev.	$77				$77	89	89
T-3	Basic Prev.	$576				$576	69	69
T-4	Basic Prev.	$1,415				$1,415	80	80
T-5	Basic Prev.	$1,215				$1,215	73	73

PLAN YEAR: 2017 ESTIMATED COST: $26,314

SectionI	Maintenance	Local	Global	Major<Crit	Major>Crit	Total	PCI before	PCI after
A-1	Basic Prev.	$152				$152	88	88
A-2	Basic Prev.	$90				$90	88	88
R-1	Basic Prev.	$18,601				$18,601	61	61
R-2	Basic Prev.	$2,291				$2,291	65	65
T-1	Prev. & Fog Seal	$47	$930			$977	84	89
T-2	Basic Prev.	$244				$244	86	86
T-3	Basic Prev.	$624				$624	67	67
T-4	Basic Prev.	$1,898				$1,898	78	78
T-5	Basic Prev.	$1,438				$1,438	70	70

PLAN YEAR: 2018 ESTIMATED COST: $36,655

SectionI	Maintenance	Local	Global	Major<Crit	Major>Crit	Total	PCI before	PCI after
A-1	Basic Prev.	$388				$388	84	84
A-2	Basic Prev.	$231				$231	84	84
R-1	Basic Prev.	$20,603				$20,603	58	58
R-2	Basic Prev.	$2,456				$2,456	62	62
T-1	Basic Prev.	$29				$29	86	86
T-2	Prev. & Fog Seal	$397	$7,920			$8,317	84	89
T-3	Basic Prev.	$672				$672	64	64
T-4	Basic Prev.	$2,398				$2,398	75	75
T-5	Basic Prev.	$1,562				$1,562	67	67

PLAN YEAR: 2019 ESTIMATED COST: $44,856

SectionI	Maintenance	Local	Global	Major<Crit	Major>Crit	Total	PCI before	PCI after
A-1	Prev. & Fog Seal	$610	$8,000			$8,610	81	88
A-2	Prev. & Fog Seal	$362	$4,750			$5,112	81	88
R-1	Basic Prev.	$22,878				$22,878	56	56
R-2	Basic Prev.	$2,643				$2,643	60	60
T-1	Basic Prev.	$47				$47	84	84
T-2	Basic Prev.	$244				$244	86	86
T-3	Basic Prev.	$719				$719	62	62
T-4	Basic Prev.	$2,920				$2,920	73	73
T-5	Basic Prev.	$1,684				$1,684	65	65

BIG TIMBER AIRPORT

PLAN YEAR: 2020 ESTIMATED COST: $691,273

SectionI	Maintenance	Local	Global	Major<Crit	Major>Crit	Total	PCI before	PCI after
A-1	Basic Prev.	$388				$388	84	84
A-2	Basic Prev.	$231				$231	84	84
R-1	Prev. & Thin AC	$24,977	$558,001			$582,978	54	66
R-2	Prev. & Thin AC	$2,964	$76,200			$79,165	57	70
T-1	Basic Prev.	$64				$64	82	82
T-2	Basic Prev.	$396				$396	84	84
T-3	Prev. & Thin AC	$783	$22,000			$22,783	59	72
T-4	Basic Prev.	$3,463				$3,463	70	70
T-5	Basic Prev.	$1,805				$1,805	62	62

PLAN YEAR: 2021 ESTIMATED COST: $27,441

SectionI	Maintenance	Local	Global	Major<Crit	Major>Crit	Total	PCI before	PCI after
A-1	Basic Prev.	$611				$611	81	81
A-2	Basic Prev.	$363				$363	81	81
R-1	Basic Prev.	$17,415				$17,415	63	63
R-2	Basic Prev.	$2,124				$2,124	67	67
T-1	Basic Prev.	$83				$83	79	79
T-2	Basic Prev.	$542				$542	82	82
T-3	Basic Prev.	$576				$576	69	69
T-4	Basic Prev.	$3,785				$3,785	68	68
T-5	Basic Prev.	$1,942				$1,942	60	60

PLAN YEAR: 2022 ESTIMATED COST: $30,961

SectionI	Maintenance	Local	Global	Major<Crit	Major>Crit	Total	PCI before	PCI after
A-1	Basic Prev.	$903				$903	78	78
A-2	Basic Prev.	$536				$536	78	78
R-1	Basic Prev.	$18,601				$18,601	61	61
R-2	Basic Prev.	$2,291				$2,291	65	65
T-1	Prev. & Fog Seal	$109	$930			$1,039	77	82
T-2	Basic Prev.	$705				$705	79	79
T-3	Basic Prev.	$624				$624	67	67
T-4	Basic Prev.	$4,083				$4,083	65	65
T-5	Basic Prev.	$2,179				$2,179	57	57

PLAN YEAR: 2023 ESTIMATED COST: $233,978

SectionI	Maintenance	Local	Global	Major<Crit	Major>Crit	Total	PCI before	PCI after
A-1	Basic Prev.	$1,204				$1,204	74	74
A-2	Basic Prev.	$715				$715	74	74
R-1	Basic Prev.	$20,603				$20,603	58	58
R-2	Basic Prev.	$2,456				$2,456	62	62
T-1	Basic Prev.	$83				$83	79	79
T-2	Prev. & Fog Seal	$930	$7,920			$8,850	77	82
T-3	Basic Prev.	$672				$672	64	64
T-4	Prev. & Thin AC	$4,379	$136,584			$140,963	62	75
T-5	Prev. & Thin AC	$2,399	$56,032			$58,431	55	67

PLAN YEAR: 2024 ESTIMATED COST: $46,789

SectionI	Maintenance	Local	Global	Major<Crit	Major>Crit	Total	PCI before	PCI after
A-1	Prev. & Fog Seal	$1,494	$8,000			$9,494	72	78
A-2	Prev. & Fog Seal	$887	$4,750			$5,637	72	78
R-1	Basic Prev.	$22,878				$22,878	56	56
R-2	Basic Prev.	$2,643				$2,643	60	60
T-1	Basic Prev.	$109				$109	77	77
T-2	Basic Prev.	$705				$705	79	79
T-3	Basic Prev.	$719				$719	62	62
T-4	Basic Prev.	$2,920				$2,920	73	73
T-5	Basic Prev.	$1,684				$1,684	65	65

BIG TIMBER AIRPORT

8/25/2009

A-1, overview

A-1, surface detail with cracks & vegetation

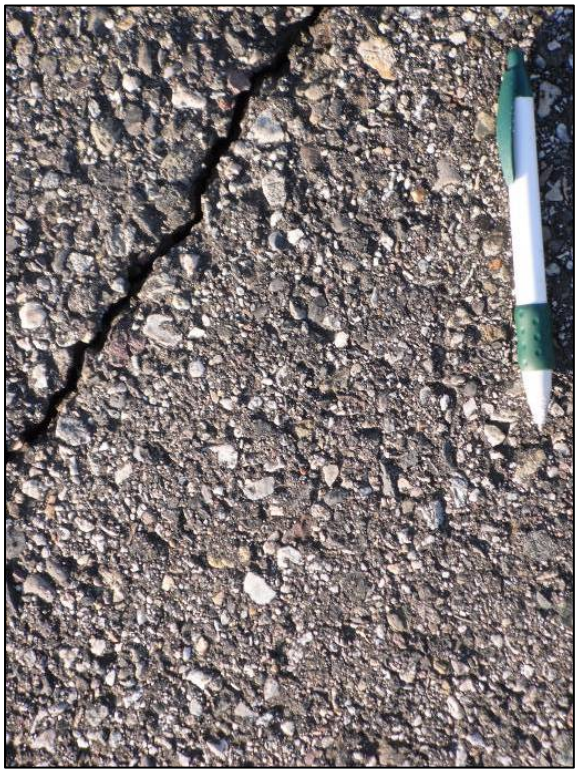

A-2, surface detail with crack

A-2, overview with oil spills

BIG TIMBER AIRPORT

8/25/2009

T-1, surface detail with bleeding

T-1, high severity crack with depression

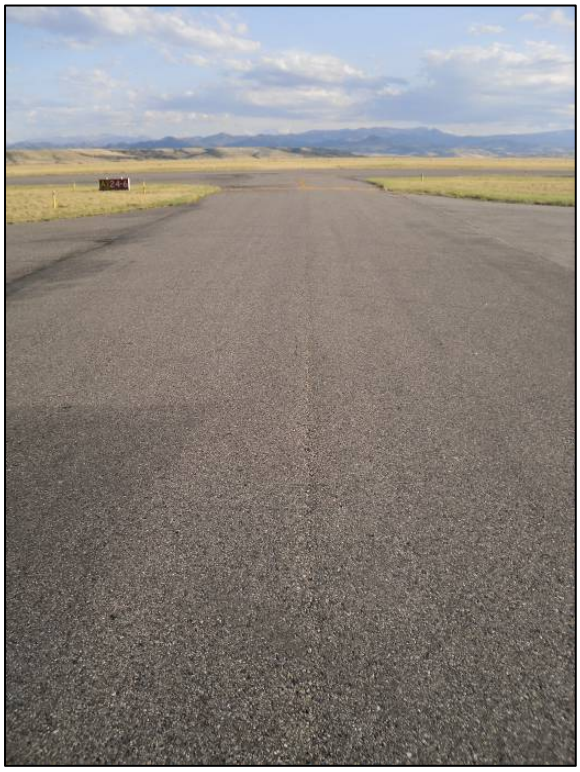

T-2, overview

T-2, surface detail with gouges

BIG TIMBER AIRPORT

8/25/2009

T-3, overview

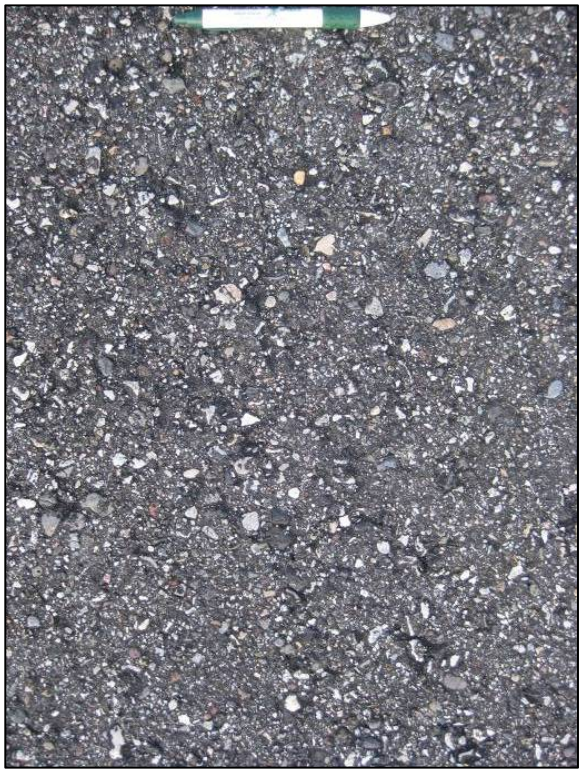

T-3, surface detail with voids

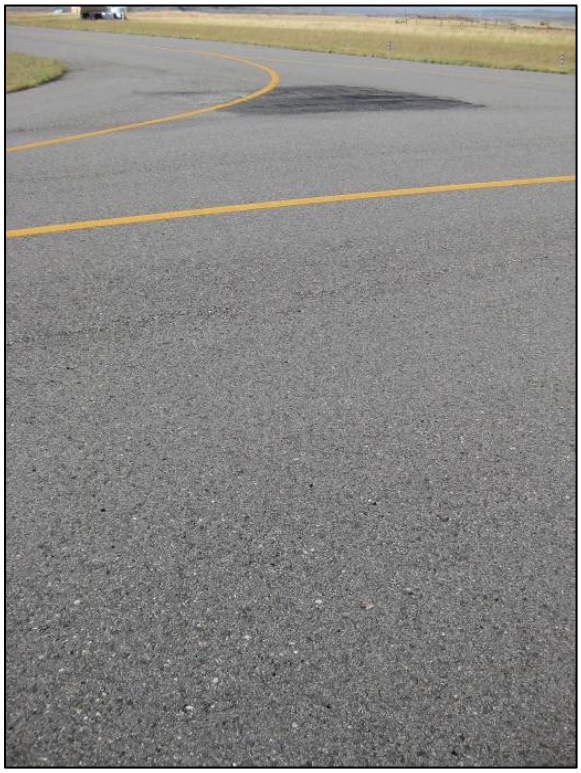

T-4, overview

T-4, surface detail with voids

BIG TIMBER AIRPORT

8/25/2009

T-5, surface detail with scrape

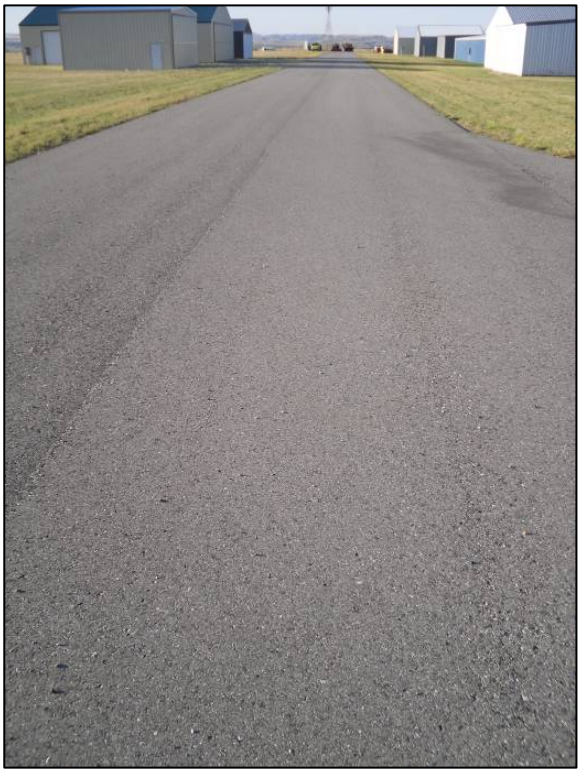

T-5, overview

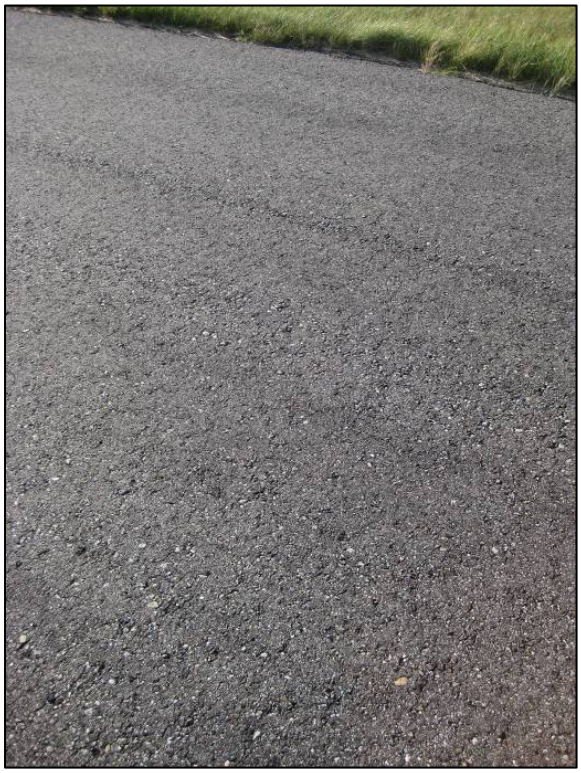

R-1, surface voids & edge vegetation

R-1, surface detail with crack, depression & alligator cracking

BIG TIMBER AIRPORT

8/25/2009

R-2, overview

R-2, surface detail with voids

BIG TIMBER

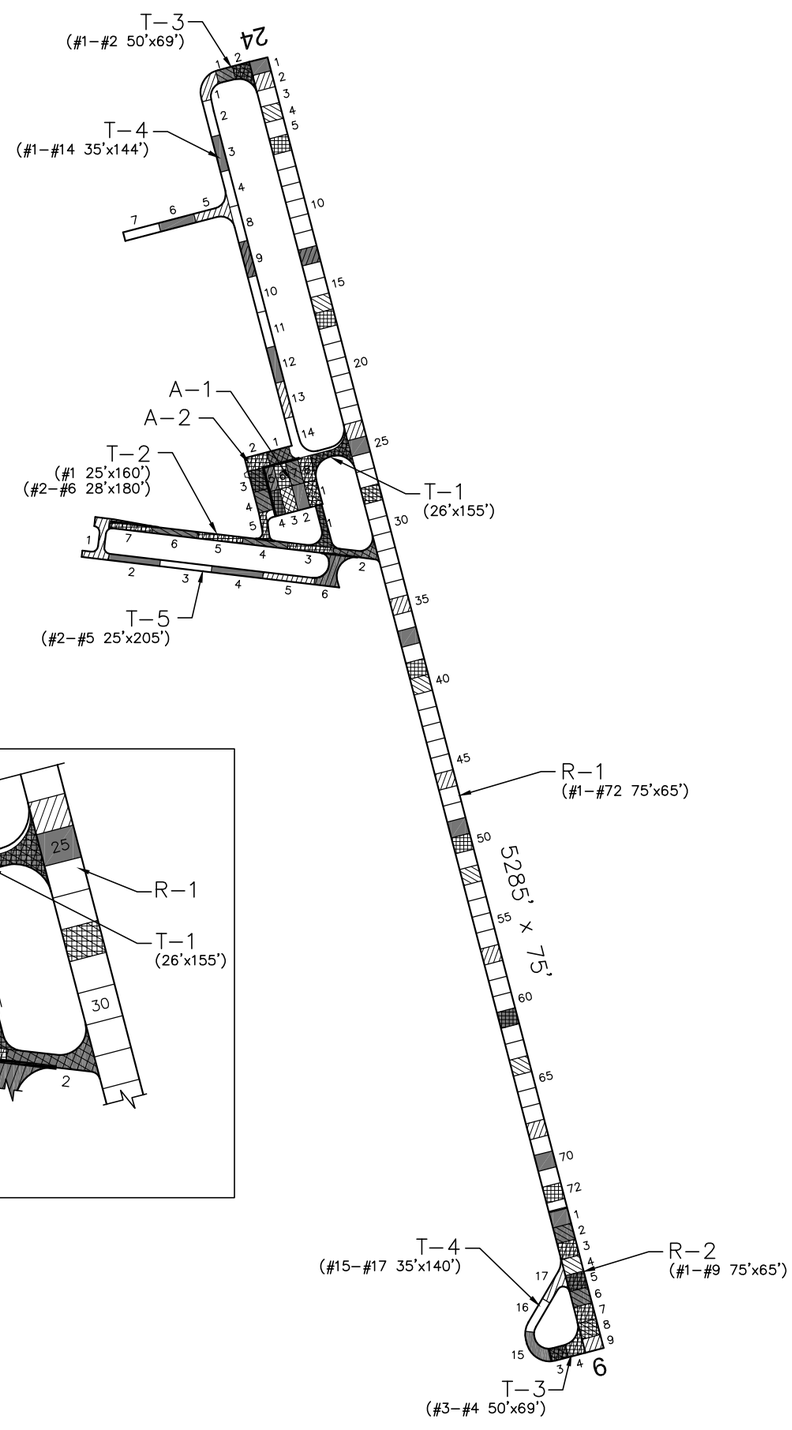

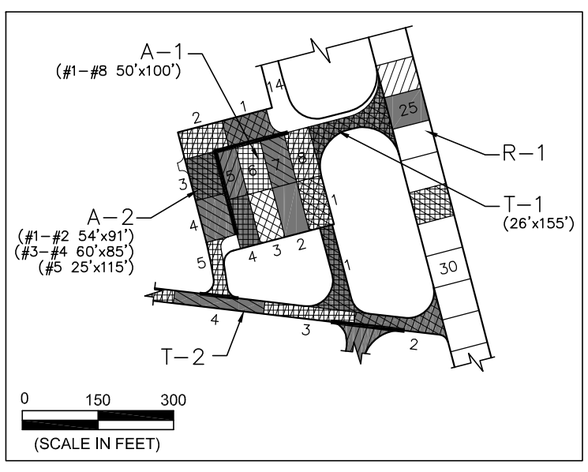

NORTH

0 300 600
(SCALE IN FEET)

PAVEMENT STRENGTH SURVEY/PAVEMENT CONDITION SURVEY

PAVE. IDENT.	SOIL CLASS	SUB GRADE CLASS	SUBBASE COURSE	BASE COURSE	SURFACE COURSE	OVERLAY	PAVEMENT STRENGTH MAX. GROSS LOAD (LBS) SINGLE	DUAL	DUAL TAN.	REMARKS
RUNWAYS										
R-1	E-7	F5	6" COMP. SUBGRADE	6" P-208, 3.5" P-207	2.5" P-401	P-609	12,500			1 2
R-2			P-154	4" P-208	2.5" P-401	P-609	12,500			1 2
TAXIWAYS										
T-1	E-7	F5	6" COMP. SUBGRADE	4" P-208	2.5" P-401	P-609	12,500			1 2
T-2					UNKNOWN	2"P-401,P-609	12,500			1 2
T-3			P-154	4" P-208	2.5" P-401	P-609	12,500			1 2
T-4	CBR=12		30" P-154	6" P-208	4" P-401		12,500			2
T-5	CBR=12		30" P-154	6" P-208	4" P-401		12,500			2
APRONS										
A-1	E-7	F5	6" COMP. SUBGRADE	4" P-208	2.5" P-401	P-609	12,500			1 2
A-2			P-154	4" P-208	2.5" P-401	P-609	12,500			1 2

REMARKS:

FROST, POOR DRAINAGE

AIP-01, 1984

1 AIP-02, 1996 RECONSTRUCT AND EXTEND RUNWAY 6-24, RECONSTRUCT TAXIWAY (T-1), CONSTRUCT CONNECTING TAXIWAY, OVERLAY TAXIWAY (T-2), AND RECONSTRUCT APRON.

2 AIP-03, 2003, CONSTRUCT PARTIAL PARALLEL TAXIWAY, JUGHANDLE TURNAROUND (T-4), AND HANGAR ACCESS TAXIWAYS (T-5). FOG SEAL AND REMARK REMAINING PAVEMENTS.

LEGEND

- 1997 SURVEY AREA (NOT SURVEYED)
- 2000 SURVEY AREA
- 2003 SURVEY AREA
- 2006 SURVEY AREA
- 2009 SURVEY AREA

DATE OF PAVEMENT STRENGTH SURVEY:	SEPT. 22, 1987
EVALUATED BY:	C. NEW
DATE OF MOST RECENT PAVEMENT CONDITION SURVEY:	AUG. 25, 2009
EVALUATED BY:	B. BURKLAND

MONTANA AVIATION SYSTEM PLAN
2009 UPDATE - PAVEMENT CONDITION INDEXES

BIG TIMBER AIRPORT

PREPARED FOR: MONTANA AERONAUTICS DIVISION

BIG TIMBER
MONTANA

DATE: NOV. 2009

PREPARED BY: RPA

BIG TIMBER