DETAILED DRAWINGS

METRIC EDITION

EFFECTIVE: FEBRUARY 2005

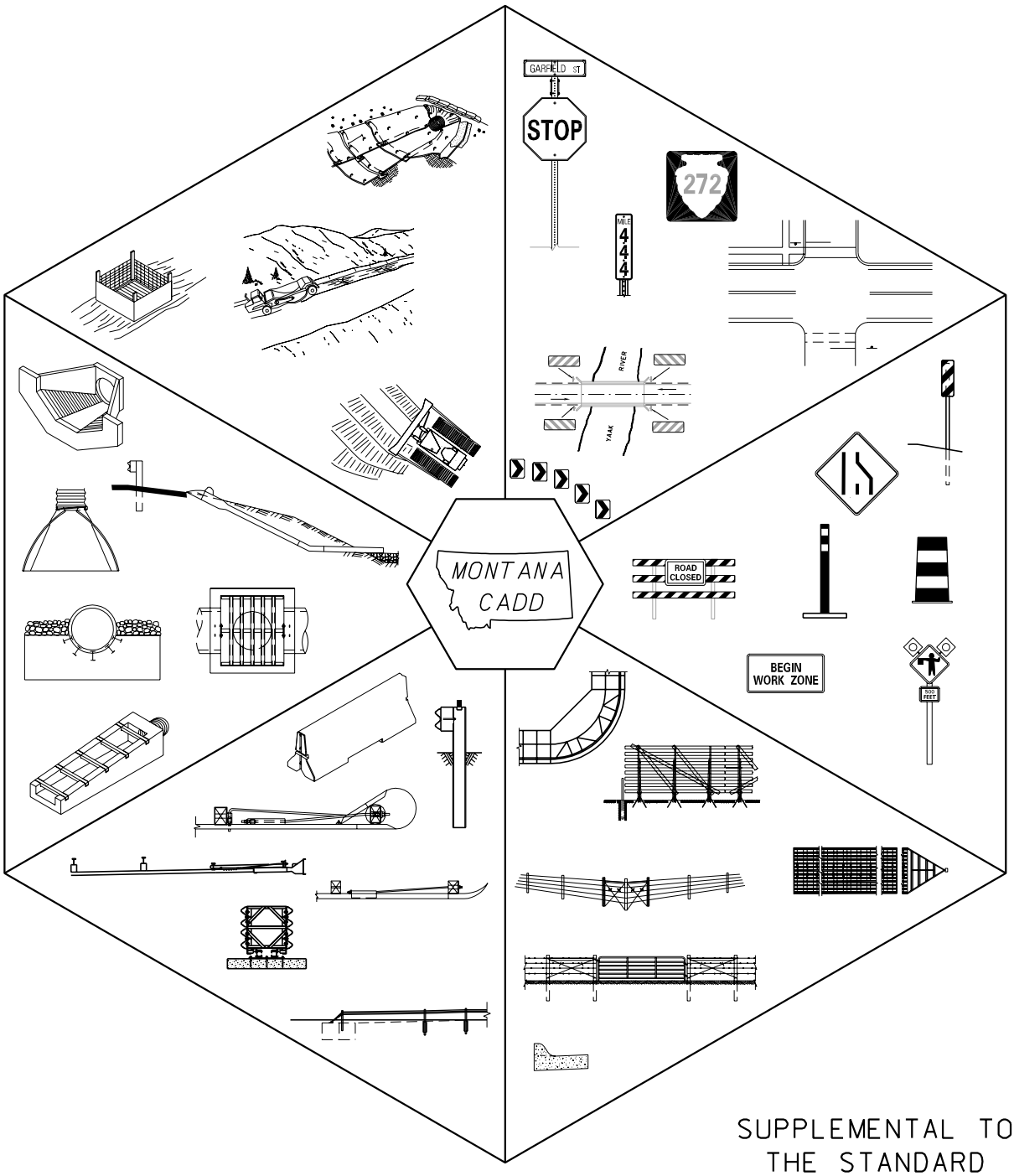

SUPPLEMENTAL TO
THE STANDARD
SPECIFICATIONS FOR
ROAD AND BRIDGE
CONSTRUCTION

serving you with pride

MONTANA DEPARTMENT
OF TRANSPORTATION

DETAILED DRAWINGS

FORWARD

ENCLOSED IS THE CURRENT SET OF DETAILED DRAWINGS CONSISTING OF METRIC DIMENSIONS AND QUANTITIES. IT IS A COMBINATION OF HARD AND SOFT NUMBERS. WHERE INDUSTRY HAS ALLOWED, HARD NUMBERS HAVE BEEN SPECIFIED. THE REMAINING NUMBERS HAVE BEEN SOFT COVERTED AND ROUNDED AS APPROPRIATE. AS INDUSTRY CHANGES AND PROGRESSES, SO WILL THE DETAILED DRAWINGS.

IN ACCORDANCE WITH THE STANDARD SPECIFICATIONS, COMPLY WITH REASONABLE AND CUSTOMARY MANUFACTURING AND CONSTRUCTION TOLERANCES WHERE WORKING TOLERANCES ARE NOT SPECIFIED.

SOME DISCREPANCIES MAY BE FOUND, IMPACTING THE CONSTRUCTABILITY OF CERTAIN ITEMS. PLEASE REPORT PROBLEMS AND ERRORS TO THE CONSTRUCTION BUREAU SO THAT THEY MAY BE RESOLVED IN FUTURE DETAILED DRAWINGS.

DETAILED DRAWINGS

TABLE OF CONTENTS

METRIC EDITION
EFFECTIVE: FEBRUARY 2005

STANDARD SPECIFICATION SECTION AND DRAWING TITLE	DRAWING NUMBER
SECTION 101: DEFINITIONS AND TERMS	
ABBREVIATIONS	101–05
ABBREVIATIONS	101–06
ABBREVIATIONS	101–07
ABBREVIATIONS	101–08
SYMBOLS	101–10
SECTION 203: EXCAVATION AND EMBANKMENT	
ROADWAY EMBANKMENT AT BRIDGE END	203–00
APPROACHES	203–05
MAILBOX TURNOUT	203–15
DITCH BLOCKS	203–20
SECTION 208: WATER POLLUTION CONTROL AND STREAM PRESERVATION	
SCHEDULE OF BEST MANAGEMENT PRACTICES	208–00
INLET/OUTLET PROTECTION	208–1A
WATERWAY PROTECTION	208–1B
WATER RESOURCE PROTECTION	208–1C
PRESERVATION OF EXISTING VEGETATION (SS–2)	208–02
HYDRAULIC MULCH (SS–3)	208–04
TEMPORARY SEEDING (SS–4)	208–06
SOIL BINDERS (SS–5)	208–08
STRAW MULCH (SS–6)	208–10
GEOTEXTILES, PLASTIC COVERS & EROSION CONT. BLANKETS / MATS (SS–7)	208–12A
GEOTEXTILES, PLASTIC COVERS & EROSION CONT. BLANKETS / MATS (SS–7)	208–12B
WOOD MULCH (SS–8)	208–14
EARTH DIKES / DRAINAGE SWALES & LINED DITCHES (SS–9)	208–16
OUTLET PROTECTION / VELOCITY DISSIPATION DEVICES (SS–10)	208–18
SLOPE DRAINS (SS–11)	208–20
SLOPE ROUGHENING (SS–12)	208–22
TERRACED SLOPES (SS–13)	208–24
VEGETATED BUFFER (SS–14)	208–26
EROSION SEEDING (SS–15)	208–28
SILT FENCE (SC–1)	208–30
DESILTING BASIN (SC–2)	208–32A
DESILTING BASIN (SC–2)	208–32B
SEDIMENT TRAP (SC–3)	208–34
CHECK DAMS (SC–4)	208–36
FIBER ROLLS (SC–5)	208–38
GRAVEL BAG BERM (SC–6)	208–40
SAND BAG BARRIERS (SC–8)	208–42

STANDARD SPECIFICATION SECTION AND DRAWING TITLE	DRAWING NUMBER
STRAW BALE BARRIERS (SC–9)	208–44
STORM DRAIN INLET PROTECTION (SC–10)	208–46A
STORM DRAIN INLET PROTECTION (SC–10)	208–46B
DUGOUT DITCH BASIN (SC–11)	208–48
WIND EROSION CONTROL (WE–1)	208–50
SNOW ACCUMULATION MANAGEMENT (SN–2)	208–52
FREEZE REDUCTION (SN–3)	208–54
STABALIZED CONSTRUCTION ENTRANCE / EXIT (TC–1)	208–56
ENTRANCE / EXIT TIRE WASH (TC–3)	208–58
TEMPORARY STREAM CROSSINGS (NS–4)	208–60
SECTION 401: COLD MILLING	
SHOULDER RUMBLE STRIPS	401–02
SECTION 552: CONCRETE STRUCTURES	
CONCRETE CUTOFF WALLS FOR CULVERTS	552–00
CONCRETE, RIPRAP AND BEDDING MATERIAL QUANTITIES FOR SING. AND DBL. CULVERT INSTALLATION	552–04
CONCRETE, RIPRAP AND BEDDING MATERIAL QUANTITIES FOR SING. AND DBL. CULVERT INSTALLATION	552–06
CONCRETE, RIPRAP AND BEDDING MATERIAL QUANTITIES FOR SING. AND DBL. CULVERT INSTALLATION	552–08
SECTION 603: CULVERTS, STORM DRAINS, SANITARY SEWERS, STOCKPASSES AND UNDERPASSES	
CMP FLARED END TERMINAL SECTION (FETS)	603–02
PREFABRICATED RCP FLARED END TERMINAL SECTION (FETS)	603–08
PREFABRICATED RCP ARCH FLARED END TERMINAL SECTION (FETS)	603–10
RCP ROAD APPROACH CULVERT END TREATMENT (RACET)	603–12
CMP ROAD APPROACH CULVERT END TREATMENT (RACET)	603–14
PRECAST MEDIAN U–TURN CROSS DRAIN AND CONC. BEVELED END	603–17
CSP AND SSPP CULVERT BEDDING	603–18
RCP CULVERT BEDDING	603–20
WATER TIGHT JOINT FOR REINFORCED CONCRETE PIPE	603–22
REINFORCED CONCRETE PIPE JOINT	603–24
TYPICAL FIELD CAST CONCRETE CONNECTIONS	603–26
EMBANKMENT PROTECTOR	603–28
VEHICULAR UNDERPASS AND BACKFILL RETAINER & CUTOFF WALL DETAIL	603–30
STEP BEVEL FOR CIRCULAR METAL CULVERT	603–32
BEVEL ON ARCH METAL CULVERT	603–34
CORRUGATED STEEL PIPE STOCKPASS	603–36
SECTION 604: MANHOLES, COMBINATION MANHOLES AND INLETS, AND INLETS	
MEDIAN INLET COVER	604–00
CONCRETE MANHOLE	604–02
CURB INLET TYPE II	604–03
DROP INLET TYPE IV	604–04
TYPE IV DROP INLET WITH SLOTTED DRAIN	604–06

STANDARD SPECIFICATION SECTION AND DRAWING TITLE	DRAWING NUMBER

TYPE II CURB INLET WITH SLOTTED DRAIN 604–08
DROP INLETS 604–14

SECTION 606: GUARDRAIL AND CONCRETE BARRIER RAIL

METAL GUARDRAIL – WOOD POSTS 606–05A
METAL GUARDRAIL – STEEL POSTS 606–05B
STIFFENED GUARDRAIL SECTIONS 606–07
NESTED W–BEAM GUARDRAIL 606–09
OPTIONAL TERMINAL SECTION – ET–PLUS 606–13A
OPTIONAL TERMINAL SECTION – SKT 350 . . . . . 606–13B
ONE–WAY DEPARTURE TERMINAL SECTION 606–18
BRIDGE APPROACH SECTIONS – WOOD POSTS 606–24A
BRIDGE APPROACH SECTIONS – STEEL POSTS 606–24B
SKEWED BRIDGE APPROACH SECTIONS – WOOD POSTS 606–25A
SKEWED BRIDGE APPROACH SECTIONS – STEEL POSTS 606–25B
TAPERED CONCRETE CURB DETAIL 606–26
TAPERED CONCRETE CURB DETAIL 606–27
IMPACT ATTENUATOR – QUADGUARD 606–30A
IMPACT ATTENUATOR – TRACC 606–30B
IMPACT ATTENUATOR – QUADGUARD ASSEMBLY DETAILS 606–31A
IMPACT ATTENUATOR – TRACC ASSEMBLY DETAILS 606–31B
CABLE GUARDRAIL 606–40
CABLE GUARDRAIL TERMINAL ANCHOR ASSEMBLY 606–41
INTERSECTING ROADWAY TERMINAL SECTION 606–46
BOX BEAM GUARDRAIL 606–50
BOX BEAM ONE–WAY DEPARTURE TERMINAL SECTION 606–52
BOX BEAM BRIDGE APPROACH SECTIONS 606–53
BOX BEAM ONE–WAY BRIDGE DEPARTURE SECTION 606–54
OPTIONAL BOX BEAM TERMINAL SECTION – WY–BET 606–55A
OPTIONAL BOX BEAM TERMINAL SECTION – BEAT 606–55B
WY–BET BOX BEAM TERMINAL SECTION DETAILS 606–56A
BEAT BOX BEAM TERMINAL SECTION DETAILS 606–56B
BOX BEAM TO W–BEAM TRANSITION SECTION 606–58
CONCRETE BARRIER RAIL 606–60
ALTERNATE CONCRETE BARRIER RAIL 606–61
CONCRETE BARRIER RAIL ANCHORS 606–62
TALL CONCRETE BARRIER RAIL 606–64
ALTERNATE TALL CONCRETE BARRIER RAIL 606–65
CONCRETE BARRIER RAIL TRANSITION 606–66
CONCRETE BARRIER RAIL TERMINAL SECTION (ONE–WAY DEPARTURE) 606–68
SCHEDULE OF GUARDRAIL HARDWARE 606–80
GUARDRAIL HARDWARE 606–82
W–BEAM METAL GUARDRAIL HARDWARE 606–84
W–BEAM METAL GUARDRAIL HARDWARE 606–88
CABLE GUARDRAIL HARDWARE 606–92
CABLE GUARDRAIL HARDWARE 606–94
CABLE GUARDRAIL HARDWARE 606–95
BOX BEAM GUARDRAIL HARDWARE 606–97

STANDARD SPECIFICATION SECTION AND DRAWING TITLE	DRAWING NUMBER

BOX BEAM GUARDRAIL HARDWARE 606–98

SECTION 607: FENCES

FARM FENCE 607–00
INTERSTATE FENCE 607–05
FENCING DETAILS 607–10
FENCING DETAILS 607–15
FARM ENTRANCE GATES 607–20
CHAIN LINK FENCE 607–25
2.4 m WOOD SNOW FENCE W/ ANCHOR SYSTEM #1 607–30
3.6 m WOOD SNOW FENCE W/ ANCHOR SYSTEM #1 607–35
WOOD SNOW FENCE ANCHOR SYSTEM #3 AND #1 DETAILS 607–40
WOOD SNOW FENCE ANCHOR SYSTEM #2 DETAILS 607–45

SECTION 608: CONCRETE SIDEWALKS

CONCRETE SIDEWALK 608–05
NEW CONSTRUCTION PUBLIC SIDEWALK CURB RAMPS 608–15
ALTERATIONS TO EXISTING FACILITIES – PUBLIC SIDEWALK CURB RAMPS 608–20
PERPENDICULAR PUBLIC SIDEWALK CURB RAMPS 608–25
PARALLEL PUBLIC SIDEWALK CURB RAMPS 608–30
DIAGONAL PERPENDICULAR PUBLIC SIDEWALK CURB RAMPS 608–35
TRUNCATED DOMES 608–40

SECTION 609: CURBS AND GUTTERS

CONCRETE VALLEY GUTTER 609–00
MISCELLANEOUS CURBS 609–05
MEDIAN CONCRETE CURBS 609–10
CONCRETE MEDIAN CAPS 609–12

SECTION 610: ROADSIDE RE–VEGETATION

TOPSOIL AND SEEDING 610–00

SECTION 611: CATTLE GUARDS

CAST–IN–PLACE CATTLE GUARD 611–00
CAST–IN–PLACE CATTLE GUARD REBAR DETAILS 611–05
PRECAST CONCRETE BASE FOR CATTLE GUARD – APPROACHES 611–10
PRECAST CONCRETE BASE FOR CATTLE GUARD 611–15
PRECAST CONCRETE CATTLE GUARD BASE DETAILS 611–20

SECTION 613: RIPRAP AND SLOPE AND BANK PROTECTION

CONCRETE EDGE PROTECTION FOR METAL CULVERTS 613–06
CONCRETE EDGE PROTECTION FOR CONCRETE CULVERTS 613–08
CONCRETE SLOPE PROTECTION 613–10
INLET AND OUTLET HEADWALLS FOR RCP AND CMP PIPES 613–12
CULVERT RIPRAP 613–14
EMBANKMENT PROTECTION 613–16
CONCRETE DRAINAGE CHUTE 613–18

STANDARD SPECIFICATION SECTION AND DRAWING TITLE	DRAWING NUMBER

SECTION 615: IRRIGATION FACILITIES AND HEADWALLS

TRASHGUARD FOR CONCRETE IRRIGATION INLET AND OUTLET TRANSITION STRUCTURES 615–02
STANDARD CONCRETE IRRIGATION DIVISION BOXES 615–04
CONCRETE IRRIGATION INLET AND OUTLET TRANSITION FOR RCP AND CSP PIPES 615–06

SECTION 617: TRAFFIC SIGNALS AND LIGHTING

ROAD CLOSURE GATE 617–00
ROAD CLOSURE GATE DETAILS 617–02
ROAD CLOSURE GATE PIVOT ASSEMBLY 617–04
ROAD CLOSURE GATE PIVOT ASSEMBLY DETAILS 617–06
FOUR BOLT SLIP BASE 617–08
FOUR BOLT SLIP BASE DETAILS 617–10

SECTION 618: TRAFFIC CONTROL

BARRICADES AND CHANNELIZING DEVICES 618–00
CONSTRUCTION SIGN DETAILS 618–01
PORTABLE SIGN SUPPORT ASSEMBLY 618–02
TWO–LANE CONSTRUCTION PROJECT 618–04
TWO–LANE CONSTRUCTION PROJECT WORK ZONES 618–08
TWO–LANE CONSTRUCTION PROJECT SEAL COAT 618–10
TWO–LANE CONSTRUCTION PROJECT LANE CLOSURE 618–12
TWO–LANE EQUIPMENT ENTRANCES 618–14
TWO–LANE EQUIPMENT ENTRANCES 618–16
TWO–LANE CONSTRUCTION PROJECT DETOUR 618–18
DIVIDED FOUR–LANE CONSTRUCTION PROJECT 618–20
TEMPORARY ENTRANCE RAMP MEDIAN CROSSING 618–21
TEMPORARY EXIT RAMP MEDIAN CROSSING 618–22
DIVIDED FOUR–LANE CONSTRUCTION PROJECT WORK ZONES 618–24
DIVIDED FOUR–LANE EQUIPMENT ENTRANCES 618–27
DIVIDED FOUR–LANE MEDIAN CROSSINGS 618–28
TEMPORARY FOUR–LANE TO TWO–LANE MEDIAN CROSSING 618–30
TEMPORARY TWO–LANE TO FOUR–LANE MEDIAN CROSSING 618–32
SHORT DURATION CREW SIGNING 618–34
SHORT–TERM STATIONARY CREW SIGNING 618–36
MAINTENANCE GUIDELINE FOR SHORT–TERM TWO–LANE CRACK SEALING WORK ZONE 618–M1
MAINTENANCE GUIDELINE FOR SHORT–TERM TWO–LANE CHIP SEAL AND OVERLAY (PILOTED TRAFFIC) 618–M2
MAINTENANCE GUIDELINE FOR SHORT–TERM LANE CLOSURE ON INTERSTATE 618–M3

SECTION 619: SIGNS, DELINEATORS AND GUIDEPOSTS

SIGN CLEARANCES AND MOUNTING HEIGHTS 619–00
TYPICAL RURAL AND URBAN APPROACHES 619–02
ALUMINUM SHEET INCREMENT SIGN CONSTRUCTION DETAILS 619–04
PLYWOOD SHEET INCREMENT GUIDE SIGN CONSTRUCTION DETAILS 619–06
GUIDE SIGN CLEARANCE AND MOUNTING DETAILS 619–08

STANDARD SPECIFICATION SECTION AND DRAWING TITLE	DRAWING NUMBER

SHEET ALUMINUM OVERLAY 619–10
TUBULAR SIGN POST DETAILS 619–12
BREAKAWAY AND FOUNDATION DETAILS FOR MULTIPLE GUIDE SIGN SUPPORTS 619–13
TYPICAL STEEL POST MOUNTING DETAILS 619–16
CANTILEVER TYPE SIGN SUPPORT DETAILS FOR SIDEWALK AREAS 619–18
STRUCTURAL STEEL POST SIGN MOUNTING DETAILS 619–19
TREATED WOOD POLE SIGN MOUNTING AND SUPPORT DETAILS 619–20
TREATED WOOD POLE SIGN MOUNTING DETAILS 619–21
TREATED WOOD POLE OPTIONAL BACKBRACE 619–22
CHEVRON MOUNTING DETAILS 619–24
SPECIAL DESIGN ROUTE MARKER PANELS AND SHIELDS 619–26
SIGN HINGE DETAILS 619–30
REFERENCE POST DETAILS 619–32
DELINEATOR DETAILS 619–34
DELINEATOR PLACEMENT DETAILS 619–36
OBJECT MARKER DESIGN AND PLACEMENT DETAILS FOR OBSTRUCTIONS ADJACENT TO OR WITHIN HIGHWAYS 619–38
FLEXIBLE DELINEATORS 619–40
PERMANENT BARRICADE DESIGN DETAILS 619–42
INSTALLATION DATE TAGS 619–44

SECTION 620: PAVEMENT MARKING APPLICATION

PAVEMENT MARKING (LETTERS) 620–00
PAVEMENT MARKING (NUMBERS) 620–05
PAVEMENT MARKING (WORDS) 620–10
PAVEMENT MARKING (ARROWS) 620–15
PAVEMENT MARKING (SYMBOLS) 620–20

SECTION 621: REMOVE, RE–SET AND ADJUST FACILITIES

MANHOLE AND VALVE BOX ADJUSTMENT DETAILS 621–00
OPTIONAL MANHOLE AND VALVE BOX ADJUSTMENT DETAILS 621–05

MISCELLANEOUS

U–TURN MEDIAN OPENINGS ON CONTROLLED ACCESS HIGHWAYS 900–00
MAILBOX DETAIL 900–05
OPTIONAL MAILBOX DETAIL 900–10

&	AND
@	AT
A.A.D.T.	ANNUAL AVERAGE DAILY TRAFFIC
AASHTO	AMERICAN ASSOCIATION OF STATE HIGHWAY AND TRANSPORTATION OFFICIALS
AB.	ABRUPT
A.C.	ALUMINUM CAP OR ASPHALT CEMENT
ADD. EXC.	ADDITIONAL EXCAVATION
ADJ.	ADJUSTED
A.D.T.	AVERAGE DAILY TRAFFIC
AGC	ASSOCIATED GENERAL CONTRACTORS OF AMERICA
AGG.	AGGREGATE
AH.	AHEAD
ANSI	AMERICAN NATIONAL STANDARDS INSTITUTE
APP.	APPROACH
APPL.	APPLICATION
APPROX.	APPROXIMATE
ARTBA	AMERICAN ROAD AND TRANSPORTATION BUILDERS ASSOCIATION
ASPH.	ASPHALT
ASTM	AMERICAN SOCIETY FOR TESTING & MATERIALS
AVE.	AVENUE
AVG.	AVERAGE
AWS	AMERICAN WELDING SOCIETY
AZ.	AZIMUTH
BAL.	BALANCE
BBL. OR BBLS.	BARREL OR BARRELS
B.C.	BRASS CAP
B.C.R.	BEGIN CURB RETURN
B.E. OR BE	BRIDGE END
BEG.	BEGIN
BIT.	BITUMINOUS OR BITUMEN
BK.	BACK OR BANK
BLDG.	BUILDING
BLK.	BLOCK
B.L.M. OR BLM	U.S. BUREAU OF LAND MANAGEMENT
BLVD.	BOULEVARD
B.M.	BENCH MARK
BNDRY.	BOUNDARY
BOT.	BOTTOM
BR.	BRIDGE
B.R.	BASE OF RAIL
BRG.	BEARING
B.S. OR BS	BACKSIGHT
B.S.T.	BITUMINOUS SURFACE TREATMENT
B.W.FE.	BARBED WIRE FENCE
C	CUT
C/A	CONTROL OF ACCESS
C.A.C. OR CAC	CRUSHED AGGREGATE COURSE
CALC.	CALCULATED
C.A.P. OR CAP	CORRUGATED ALUMINUM PIPE
CATV	CABLE TV
CB.	CURB
C.B.	CATCH BASIN
C.B.W.	CONCRETE BLOCK WALL
C.C.	CLOSING CORNER
CDTN.	CONDITION
CEM.	CEMENT
C&G	CURB & GUTTER
CH.	CHANNEL OR CHAIN
CH.CH.	CHANNEL CHANGE
CHD.	CHORD
CHIS."x"	CHISELED CROSS
C.I.	CURB INLET
CIR.	CIRCLE
CL.	CLASS OR CLEARANCE
CL-4F,5F	CHAIN LINK FENCE (W/ HEIGHT - ENGLISH)
CL-1.2F,1.5F	CHAIN LINK FENCE (W/ HEIGHT - METRIC)
C/L OR ℄	CENTERLINE
C.M.P. OR CMP	CORRUGATED METAL PIPE
C.N.	CONCRETE NAIL
CO.	COUNTY OR COMPANY
C.O.	CLEAN OUT
COMP.	COMPACTION
CONC.	CONCRETE
COND.(TEL.)	CONDUIT (SPECIFY TYPE)
CONN.	CONNECTION
CONST.	CONSTRUCTION
CONST. PMT.	CONSTRUCTION PERMIT
COR.	CORNER
CORR.	CORRECTED OR CORRUGATION
COV.	COVER
C.P.	CATCH POINT
CR.	CRUSHED OR CREEK
CRS.	COURSE
C.S. OR CS	CURVE TO SPIRAL
C.S.F. OR CSF	COMBINATION SCALE FACTOR
C.S.P. OR CSP	CORRUGATED STEEL PIPE
C.S.P.A OR CSPA	CORRUGATED STEEL PIPE ARCH
CT.	COURT
C.T.B. OR CTB	CEMENT TREATED BASE
CTR.	CENTER
C.T.S. OR CTS	CRUSHED TOP SURFACING
CULV.	CULVERT
C.Y.	CUBIC YARD
D	DEGREE OF CURVATURE OR DISTRIBUTION OF TRAFFIC
DBL.	DOUBLE
D_c	DEGREE OF CURVATURE (WITH SPIRALS)
D.D.	DOWN DRAIN
DE	DIFFERENCE IN ELEVATION
DEFL.	DEFLECTION
DESC.	DESCRIPTION
DEST.	DESTROYED
DET.	DETOUR OR DETAIL
DETC.	DETECTOR
D.H.	DRILL HOLE
D.H.V.	DESIGN HOURLY VOLUME
D.I.	DROP INLET
DIA.	DIAMETER
DIST.	DISTANCE OR DISTRICT
DN.	DOWN
DP.	DEEP
DR.	DRAIN OR DRIVE
DT.	DITCH
DTL.	DETAIL OR DETAILED
DWG.	DRAWING
DY.	DAYLIGHT
E	EAST OR EXTERNAL DISTANCE
EASE. OR ESMT.	EASEMENT
E.B. OR EB	EASTBOUND
E.C.R.	END CURB RETURN
E.D.M. OR EDM	ELECTRONIC DISTANCE MEASUREMENT OR MEASURER
E.G.	EDGE OF GUTTER
ELEV. OR EL.	ELEVATION
ELONG.	ELONGATED
ELY.	EASTERLY
EMB.	EMBANKMENT
EMUL.	EMULSIFIED
E.O.	EDGE OF OIL
E.P.	EDGE OF PAVEMENT
EQ.	EQUATION
E_s	EXTERNAL DISTANCE (WITH SPIRALS)
E.S.	EDGE OF SHOULDER
E.T.W. OR ETW	EDGE OF TRAVELED WAY
EW.	END WALL
EX.	EXISTING
EXC.	EXCAVATION
EXT.	EXTENSION
EXWY.	EXPRESSWAY

DETAILED DRAWING

REFERENCE STANDARD SPEC. SECTION 101

DWG. NO. 101-05

ABBREVIATIONS

EFFECTIVE: FEBRUARY 2005

MDT serving you with pride — MONTANA DEPARTMENT OF TRANSPORTATION

F	FILL
F.A.	FEDERAL AID
F.C.	FLOOD CONTROL
FD.	FOUND
FDN.	FOUNDATION
FE.	FENCE
FERT.	FERTILIZER
F.E.T.S. OR FETS	FLARED END TERMINAL SECTION
F.G. OR FG	FINISHED GRADE OR FRONT OF GUTTER
F.G.S.	FINISHED GRADE STAKE
F.H.	FIRE HYDRANT
FHWA	FEDERAL HIGHWAY ADMINISTRATION
FIN.	FINISH
FL.	FLUSH
F.L. OR FL	FLOW LINE
F.O. OR FO	FIBER OPTIC CABLE
F.P.	FENCE POST
FR. OR FR	FRONTAGE
FR. RD.	FRONTAGE ROAD
F.S. OR FS	FORESIGHT
FT.	FOOT OR FEET
FTG.	FOOTING
FUT.	FUTURE
FWY.	FREEWAY
g	GRAM
G	GRADING
GA.	GAGE
GAL.	GALLON
GALV.	GALVANIZED
GAR.	GARAGE
GEOD.	GEODETIC
G.L.	GAS LINE
G.L.O.	GENERAL LAND OFFICE
G.P.S. OR GPS	GLOBAL POSITIONING SYSTEM
GR.	GRADE
G.R.	GUARDRAIL
GRD	GRID
GRND.	GROUND
GR.SEP.	GRADE SEPARATION
G.S.	GRAVEL SURFACING
G.S.P. OR GSP	GALVANIZED STEEL PIPE
GTR.	GUTTER
G.V.	GAS VALVE
ha	HECTARE
HDWL.	HEADWALL
HG.	HEADGATE
H.I. OR HI	HEIGHT OF INSTRUMENT
HO.	HOUSE
HOR.	HORIZONTAL
H.P.	HINGE POINT
HT.	HEIGHT
H&T	HUB & TACK
H.W.	HIGH WATER
HWY.	HIGHWAY
I	INTERSTATE
I.C.	INCIDENTAL CONSTRUCTION
I.D.	INSIDE DIAMETER
I.E.	INVERT ELEVATION
IN.	INCH
INC.	INCORPORATED OR INCREMENT
INCL.	INCLUDED
INSTR.	INSTRUMENT
INT.	INTERSECTION
INTCH.	INTERCHANGE
INV.	INVERT
I.P.	IRON PIN
IRR.	IRRIGATION
I.R.T.S. OR IRTS	INTERSECTING ROADWAY TERMINAL SECTION
JCT.	JUNCTION
J.P.	JOINT USE POLE
kg	KILOGRAM
km	KILOMETER
L	LENGTH OF CURVE, LITER OR ANGLE IRON
LB.	POUND
L_c	LENGTH OF CIRCULAR CURVE
L.C.	LONG CHORD
L.D.	LOOP DETECTOR
LENG.	LENGTH OR LENGTHEN
L.F.	LINEAR FOOT
LN.	LANE
L_s	LENGTH OF SPIRAL
L.S.	LAND SURVEYOR
LT.	LEFT
m	METER
m^2	SQUARE METER
m^3	CUBIC METER
mm	MILLIMETER
mm^2	SQUARE MILLIMETER
MATL.	MATERIAL
MAX.	MAXIMUM
M.C. OR MC	MEDIUM CURING
MDT	MONTANA DEPARTMENT OF TRANSPORTATION
MEAS.	MEASURED
MED.	MEDIAN
MH.	MANHOLE
MIN.	MINIMUM, MINERAL OR MINUTE
MISC.	MISCELLANEOUS
MKR.	MARKER
M.L.	MAINLINE
MNCPL.	MUNICIPAL
M.O.	MID ORDINATE
MON.	MONUMENT
M.P.C. OR MPC	MID-POINT OF CURVE
MUTCD	MANUAL ON UNIFORM TRAFFIC CONTROL DEVICES
M.Y.	MILE YARD
N	NORTH
N.B. OR NB	NORTHBOUND
N.C.	NORMAL CROWN
N.E.	NORTHEAST
N.G. OR NG	NATURAL GAS
N.G.S. OR NGS	NATIONAL GEODETIC SURVEY
NL.	NAIL
NLY.	NORTHERLY
NO. OR #	NUMBER
N.W.	NORTHWEST
N.W.EL.	NORMAL WATER ELEVATION
O. OR O/S	OFFSET
O.C.	ON CENTERS OR OVERHEAD CROSSING
O.D.	OUTSIDE DIAMETER
O.G.	OLD GROUND OR ORIGINAL GROUND
OH.	OVERHANG OR OVERHEAD
O'PASS	OVERPASS
P	POWER CABLE, PIPE OR PRIMARY
P. OR PG.	PAGE
PAVT.	PAVEMENT
P.B.	PULL BOX
P.C. OR PC	POINT OF CURVE (BEGINNING)
P.C.C. OR PCC	POINT OF COMPOUND CURVE OR PORTLAND CEMENT CONCRETE
P.C.S.	PROJECT CONTROL SYSTEM
P.E. OR PE	PRELIMINARY ENGINEERING OR PROFESSIONAL ENGINEER

DETAILED DRAWING

REFERENCE STANDARD SPEC. SECTION 101

DWG. NO. 101-06

ABBREVIATIONS

EFFECTIVE: FEBRUARY 2005

serving you with pride

MONTANA DEPARTMENT OF TRANSPORTATION

PEN.	PENETRATION
PERF.	PERFORATED
P.I. OR PI	POINT OF INTERSECTION
PL.	PLACE, PLATE OR PLANT
P.L.	PROPERTY LINE
PLAS.	PLASTIC
P.M.	PRINCIPAL MERIDIAN OR PUNCH MARK
P.M.B.	PLANT MIX BASE
P.M.P.	PERFORATED METAL PIPE
P.M.S. OR PMS	PLANT MIX SURFACING
PMT.	PERMIT
P.O.C. OR POC	POINT ON CURVE
P.O.L. OR POL	POINT ON LINE
P.O.S. OR POS	POINT ON SPIRAL
P.O.S.T. OR POST	POINT ON SEMI-TANGENT
P.O.T. OR POT	POINT ON TANGENT
P.O.V.C. OR POVC	POINT ON VERTICAL CURVE
P.P. OR PP	POWER POLE
PP.	PAGES
PREST.	PRESTRESSED
PRIM.	PRIMARY
PROC.	PROCESSING
PROJ.	PROJECT OR PROJECTED
PROT.	PROTECT, PROTECTOR OR PROTECTION
P.T. OR PT	POINT OF TANGENT (END OF CURVE)
PT.	POINT
P.T.W. OR PTW	PRESENT TRAVELED WAY
PVC. OR PVC	POLYVINYL CHLORIDE
PVT.	PRIVATE
PWR. OR PWR	POWER (LINES)
Q	PEAK DISCHARGE (WATER)
QTY.	QUANTITY
R	RANGE, RADIUS OR RISE
R.A.C.E.T. OR RACET	ROAD APPROACH CULVERT END TREATMENT
R.A.P. OR RAP	RECYCLED ASPHALT PAVEMENT
R_c	SPIRAL CURVE RADIUS
R.C OR RC	RAPID CURING
R.C.B. OR RCB	REINFORCED CONCRETE BOX
R.C.P. OR RCP	REINFORCED CONCRETE PIPE
R.C.P.A. OR RCPA	REINFORCED CONCRETE PIPE ARCH
RD.	ROAD
RDL.	RADIAL
RDWY.	ROADWAY
REC.	RECORD
REF.	REFERENCE
REINF.	REINFORCEMENT
RET.W.	RETAINING WALL
RIV.	RIVER
R.M.	REFERENCE MONUMENT
R.P. OR RP	REFERENCE POINT, POST OR RADIUS POINT
R.R.	RAILROAD
RT.	RIGHT OR ROUTE
RTE.	ROUTE
R/W	RIGHT OF WAY
RY.	RAILWAY
S	RATE OF FULL SUPERELEVATION, SLOPE IN FT. PER FT., SPAN, SOUTH OR SECONDARY
SA.	SATELLITE (FOR TRAVERSE USE)
SAN.SEW.	SANITARY SEWER
S.B. OR SB	SOUTHBOUND
S.C. OR SC	SPIRAL TO CURVE OR SLOW CURING
SCH.	SCHEDULE
SDWK.	SIDEWALK
S.E.	SOUTHEAST
SEC.	SECTION, SECOND OR SECONDARY
SEL.	SELECT
S.G., SG OR SUBGR.	SUBGRADE
SHLD. OR SH.	SHOULDER
SHT.	SHEET
SING.	SINGLE
SIP.	SIPHON
S.L.D.	SEA LEVEL DATUM
SLOT.DR.	SLOTTED DRAIN
SLP.STK.	SLOPE STAKE
SLY.	SOUTHERLY
S.P.	STAND PIPE OR STATE PLANE
SPEC. PROV.	SPECIAL PROVISION
S.P.H.P.	STEEL PIPE, HIGH PRESSURE
SPK.	SPIKE
SQ.	SQUARE
S.S. OR SS	EMULSIFIED ASPHALT
S.S.P.P. OR SSPP	STRUCTURAL STEEL PLATE PIPE
S.S.P.P.A. OR SSPPA	STRUCTURAL STEEL PLATE PIPE ARCH
S.S.P.P.A.C. OR SSPPAC	STRUCTURAL STEEL PLATE PIPE ARCH CULVERT
S.T. OR ST	SPIRAL TO TANGENT
ST.	STREET
STA.	STATION
STD.	STANDARD
STD. SPEC.	STANDARD SPECIFICATIONS
STK.	STAKED OR STAKE
STL.	STEEL
STM.	STORM DRAIN
STPD.	STAMPED
STR.	STRUCTURE OR STRAIGHT
SUBD.	SUBDIVISION
SURF.	SURFACE OR SURFACING
SURV.	SURVEY
S.W.	SOUTHWEST OR SIDEWALK
S.Y.	SQUARE YARD
†	METRIC TON
T	TOWNSHIP, TANGENT LENGTH OR PERCENT TRUCKS
TAN.	TANGENT
T.B.C. OR TBC	TOP BACK OF CURB
T.B.M.	TEMPORARY BENCH MARK
TBR.	TIMBER
TEL. OR TEL	TELEPHONE
TEL.C.	TELEPHONE CABLE
TELG.	TELEGRAPH
TEL.P.	TELEPHONE POLE
TEMP.	TEMPERATURE OR TEMPORARY
THK.	THICKNESS
TK.	TACK
TOPOG.	TOPOGRAPHIC
T.P. OR TP	TURNING POINT
TR.	TRACT
TRANS.	TRANSMISSION LINE OR TRANSITION
TRAV.	TRAVERSE
TRIA.	TRIANGULATION
T_s	LENGTH OF TANGENT (CURVE WITH SPIRALS)
T.S. OR TS	TANGENT TO SPIRAL
T.T. OR TT	TRANSMISSION TOWER
TYP.	TYPICAL
U	UNIT
U.G.	UNDERGROUND
UNCL.	UNCLASSIFIED
U'PASS	UNDERPASS
U.S.C. & G.S.	U.S. COAST & GEODETIC SURVEY
U.S.C.E.	U.S. CORPS OF ENGINEERS
U.S.F.S.	U.S. FOREST SERVICE
U.S.G.S.	U.S. GEOLOGICAL SURVEY
U.S.P.L.S.	U.S. PUBLIC LAND SURVEY
V	DESIGN SPEED OR VELOCITY
V.A.B.M.	VERTICAL ANGLE BENCH MARK

DETAILED DRAWING

REFERENCE STANDARD SPEC. SECTION 101

DWG. NO. 101-07

ABBREVIATIONS

EFFECTIVE: FEBRUARY 2005

serving you with pride

MONTANA DEPARTMENT OF TRANSPORTATION

V.C. OR VC	VERTICAL CURVE
V.C. CORR.	VERTICAL CURVE OFFSET CORRECTION
V.C.M.	VERTICAL CONTROL MONUMENT
V.C.P.	VITRIFIED CLAY PIPE
VEH.	VEHICULAR
VERT. OR VT.	VERTICAL
VIT.	VITRIFIED
V.P.	VENT PIPE
V.P.C. OR VPC	VERTICAL POINT OF CURVE
V.P.I. OR VPI	VERTICAL POINT OF INTERSECTION
V.P.T. OR VPT	VERTICAL POINT OF TANGENCY
W	WEST
W/	WITH
W.B. OR WB	WESTBOUND
W.C.	WITNESS CORNER
W.L.	WATER LINE
WLY.	WESTERLY
W/O	WITHOUT
W.P.	WING POINT
W.S.	WATER SERVICE OR WARPED OR VARIABLE SLOPE
WT.	WEIGHT
W.T.	WATER TABLE
W.V.	WATER VALVE
W.W.	WING WALL OR WOVEN WIRE
YD	YARD
YD^2	SQUARE YARD
YD^3	CUBIC YARD
XING.	CROSSING
XSEC.	CROSS SECTION

DETAILED DRAWING

REFERENCE
STANDARD SPEC.
SECTION 101

DWG. NO.
101-08

ABBREVIATIONS

EFFECTIVE: FEBRUARY 2005

serving you with pride

MONTANA DEPARTMENT OF TRANSPORTATION

TITLE SHEET

- PRIMARY ROAD **
- PRIMITIVE ROAD
- PROPOSED ROAD
- GRADED ROAD
- BLADED ROAD
- PRIMITIVE ROAD
- GRAVELED ROAD (CADD *)
- PAVED ROAD
- FEDERAL AID ROUTING (ON EXISTING ROAD)
- FEDERAL AID ROUTING (NON-EXISTING ROAD)
- INTERCHANGE
- STRUCTURE
- F.F. FREE FERRY
- T.F. TOLL FERRY
- HIGHWAY TUNNEL
- PASS
- RAILROAD
- RESERVATION LINE
- STATE & NATIONAL LINE
- COUNTY LINE
- TOWNSHIP & SECTION LINE
- 10 INTERSTATE
- 10 U.S. HIGHWAY
- 23 STATE HIGHWAY (CADD *)
- CITY OR TOWN
- AIR FIELD
- DAM
- BUILDING OR HOUSE
- BRIDGE

** PRIMARY ROADS ARE 2.03 mm WIDE. ALL OTHERS ARE 1.27 mm WIDE.

PROFILE

- FLOWLINE AT ℄ CULVERT
- FLOWLINE AT ℄ IRRIGATION SYPHON
- FLOWLINE AT ℄ CONCRETE BOX CULVERT

CROSS SECTIONS

- POWER POLE (NO. OF WIRES AND VOLTAGE)
- TELEPHONE POLE (NO. OF WIRES)
- TELEGRAPH POLE (NO. OF WIRES)
- GUY POLE
- GUY AND ANCHOR

PLAN

- STATE & NATIONAL LINE
- COUNTY LINE
- CITY OR TOWN BOUNDARIES
- TOWNSHIP LINE
- 1/4 CORNER 6 5 7 8 — SECTION LINE (SHOWING CORNER SOLID IF FOUND - OPEN IF NOT FOUND)
- CLOSING CORNER
- MEANDER CORNER
- OWNERSHIP TIE
- PROPERTY CORNER
- EXISTING R/W MONUMENT
- NEW R/W MONUMENT
- PROPERTY LINE
- SECTION LINE
- EXISTING ACCESS
- AC AC — FULL ACCESS CONTROL
- LIMITED CONTROL
- EXISTING RIGHT-OF-WAY
- R/W, 12.19 m, 18.29 m, 24.38 m, RR R/W, PC, STA, N 89° 40' E — HIGHWAY RIGHT-OF-WAY
- RAILROAD RIGHT-OF-WAY
- BASE OR SURVEY LINE
- N 89° 40' E — ℄ OF STAKED LINE WHEN A PROJECTION IS MADE
- RAILROAD
- TRAVELED WAY
- LEVEE OR DIKE (CADD *)
- RETAINING WALL (CADD *)
- PROPOSED RETAINING WALL (CADD *)
- RIPRAP
- GEOTEXTILE PATTERN
- CONCRETE SIDEWALK
- NEW IN PLACE — CONCRETE CURB
- EXISTING FENCE
- PROPOSED FENCE
- SNOW FENCE
- PROPOSED SNOW FENCE
- EXISTING GUARDRAIL
- PROPOSED GUARDRAIL
- EXISTING CONCRETE MEDIAN RAIL
- TEN MILE CREEK — SMALL DRAINAGE
- LARGE DRAINAGE
- RESERVOIR WITH DAM
- LAKE
- MARSH, SWAMP (CADD *)

PLAN

- BLUFFS OR CLIFFS
- WATER'S EDGE
- DEPRESSION
- DEPRESSION OBSCURE
- DITCH BLOCK
- EXISTING DITCH OR FLOW LINE
- PROPOSED DITCH
- FLOW LINE UP HILL
- CULVERT WITH HEADWALL (IN PLACE)
- CULVERT WITHOUT HEADWALL (IN PLACE)
- PROPOSED CULVERT
- EXISTING DROP OR MEDIAN INLET
- PROPOSED DROP OR MEDIAN INLET
- W WATER VALVE BOX
- MANHOLE (LABEL AS TO TYPE OR SERVICE)
- PROPOSED MANHOLE
- FIRE HYDRANT
- WATER WELL — WELL (CADD *)
- EXISTING CATCH BASIN
- PROPOSED CATCH BASIN
- CONDUIT & WIRING
- P — POWER CABLE
- PWR — EXISTING UNDERGROUND POWER (CADD *)
- PWR — EXISTING OVERHEAD POWER (CADD *)
- TEL or TELG — TELEPHONE OR TELEGRAPH CABLE
- TEL — EXISTING UNDERGROUND TELEPHONE (CADD *)
- TEL — EXISTING OVERHEAD TELEPHONE (CADD *)
- W — WATER LINE
- W — EXISTING WATER LINE (CADD *)
- STM — STORM SEWER
- STM — EXISTING STORM DRAIN (CADD *)
- STM — PROPOSED STORM DRAIN (CADD *)
- SAN — SANITARY SEWER
- SAN — EXISTING SANITARY SEWER (CADD *)
- SAN — PROPOSED SANITARY SEWER (CADD *)
- NG — NATURAL GAS LINE
- NG — EXISTING NATURAL GAS LINE (CADD *)
- GAS OR OIL — GASOLINE OR OIL LINE
- GAS — EXISTING GAS PIPE LINE (CADD *)
- OIL — EXISTING OIL PIPE LINE (CADD *)
- FO — EXISTING UNDERGROUND FIBER CABLE (CADD *)
- TV — EXISTING UNDERGROUND TV CABLE (CADD *)
- MIS — EXISTING UNDERGROUND MISSILE CABLE (CADD *)

PLAN

- SINGLE POST SIGN
- MULTIPLE POST SIGN
- TELEGRAPH POLE
- TELEPHONE POLE
- T TELEPHONE PEDESTAL
- POWER POLE
- P POWER PEDESTAL
- TROLLEY POLE
- LIGHT POLE
- GUY POLE
- GUY WIRE & ANCHOR
- TRANSMISSION TOWER
- G GAS VALVE
- OIL OR GAS WELL
- TANKS
- TREE OR BUSH
- TREE LINE
- HEDGE LINE
- MB MAILBOX
- EXISTING APPROACH
- PROPOSED APPROACH
- EXISTING CATTLE GUARD
- PROPOSED CATTLE GUARD
- GRAVEL PIT
- SCALES
- MILE POST
- PROJECT MARKER
- STATION MARKER
- ℄ CENTERLINE
- DEFLECTION ANGLE
- Δ_c DEFLECTION ANGLE (CIRCULAR CURVE WITH SPIRALS)
- Θ_s DEFLECTION ANGLE OF ONE SPIRAL
- N NORTH ARROW
- GATE

* SYMBOLOGY USED ON CADD DRAFTED PLANS

ALL DIMENSIONS ARE MILLIMETERS (mm) UNLESS OTHERWISE NOTED.

DETAILED DRAWING	
REFERENCE STANDARD SPEC. SECTION 101	DWG. NO. 101-10
SYMBOLS	
EFFECTIVE: FEBRUARY 2005	

MDT serving you with pride — MONTANA DEPARTMENT OF TRANSPORTATION

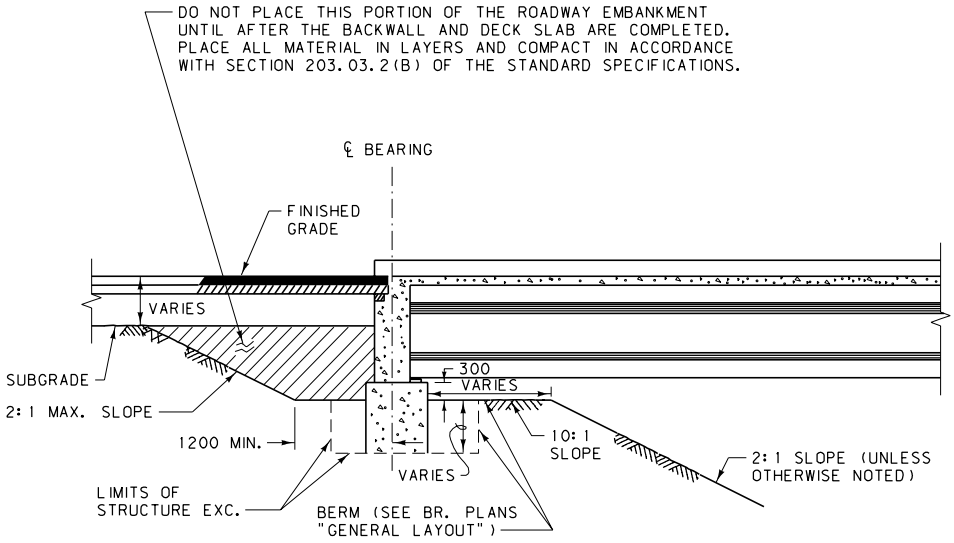

SECTION A-A

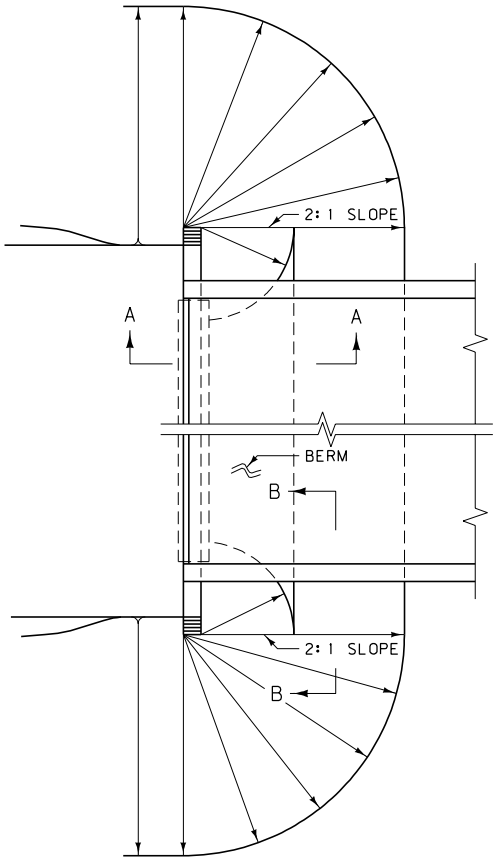

PLAN VIEW

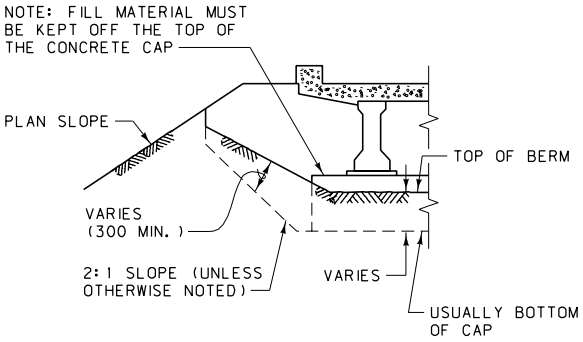

SECTION B-B

ALL DIMENSIONS ARE MILLIMETERS (mm) UNLESS OTHERWISE NOTED.

DETAILED DRAWING	
REFERENCE STANDARD SPEC. SECTION 203	DWG. NO. 203-00
ROADWAY EMBANKMENT AT BRIDGE END	
EFFECTIVE: FEBRUARY 2005	
serving you with pride	MONTANA DEPARTMENT OF TRANSPORTATION

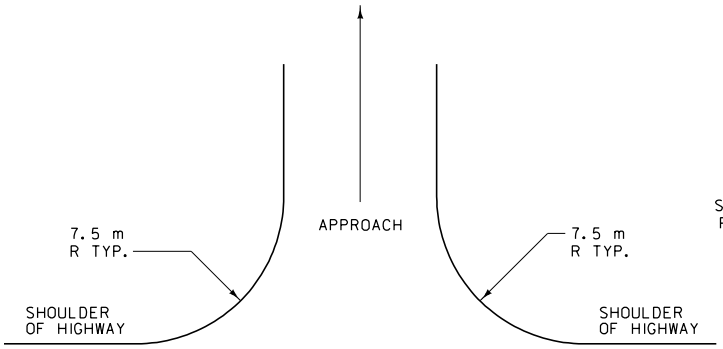

NOTE: MAX. SKEW ANGLE IS 30°.

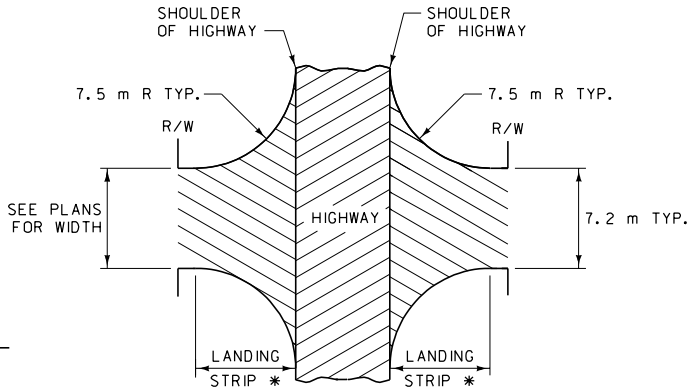

* 7.5 m MIN. FOR PRIVATE OR FIELD APP.
25.0 m MIN FOR COUNTY AND MAIN ROADS.

SLOPE FOR DRAINAGE (-3% DESIRABLE, +3% ALLOWABLE).

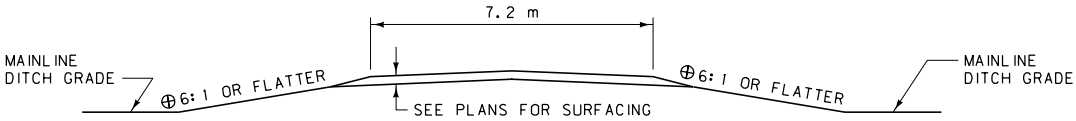

TYPICAL SECTION WITHIN CLEAR ZONE

USE A PIPE AS NECESSARY FOR DRAINAGE. INSTALL CULVERTS OUTSIDE THE CLEAR ZONE OR PROVIDE END TREATMENT.

⊕10:1 SLOPES ARE DESIRABLE ON HIGH SPEED FACILITIES WHERE PRACTICAL

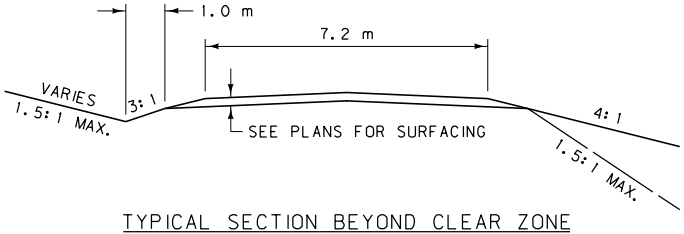

TYPICAL SECTION BEYOND CLEAR ZONE

BACK SLOPES **	
0 - 1.5 m	4:1
1.5 m - 3.0 m	2:1
OVER 3.0 m	1.5:1

FILL SLOPES **	
0 - 3.0 m	4:1
3.0 m - 6.0 m	2:1
OVER 6.0 m	1.5:1

NOTES:

APPROACH GRADE BEYOND LANDING IS NOT TO EXCEED 10% UNLESS TRAFFIC VOLUMES AND COST INDICATE SUCH TO BE JUSTIFIABLE.

CONSTRUCT APPROACHES TO FIT LOCAL CONDITIONS, MINIMIZE TRAFFIC HAZARDS, AND AFFORD ENTRY AND EXIT OF TRAFFIC TO AND FROM THE MAIN ROAD.

SECURE WRITTEN PERMISSION FROM LANDOWNER FOR WORK BEYOND THE RIGHT-OF-WAY.

** CRITERIA SHOWN ARE FOR PRIVATE AND FARM FIELD APPROACHES. FOR COUNTY AND MAIN ROADS USE ESTABLISHED STANDARDS FOR APPLICABLE FUNCTIONAL CLASS.

ALL DIMENSIONS ARE MILLIMETERS (mm) UNLESS OTHERWISE NOTED.

DETAILED DRAWING

REFERENCE STANDARD SPEC. SECTION 203

DWG. NO. 203-05

APPROACHES

EFFECTIVE: FEBRUARY 2005

serving you with pride

MONTANA DEPARTMENT OF TRANSPORTATION

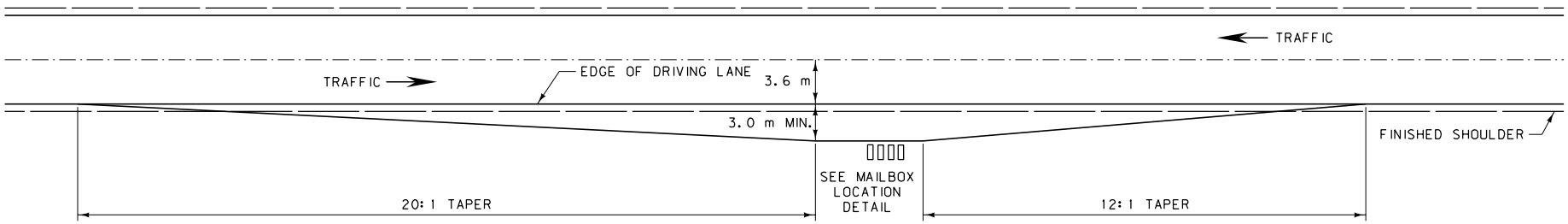

TURNOUT WITHOUT APPROACH

NOTE:
ACTUAL SIZE AND LOCATION TO BE DETERMINED BY THE ENGINEER.

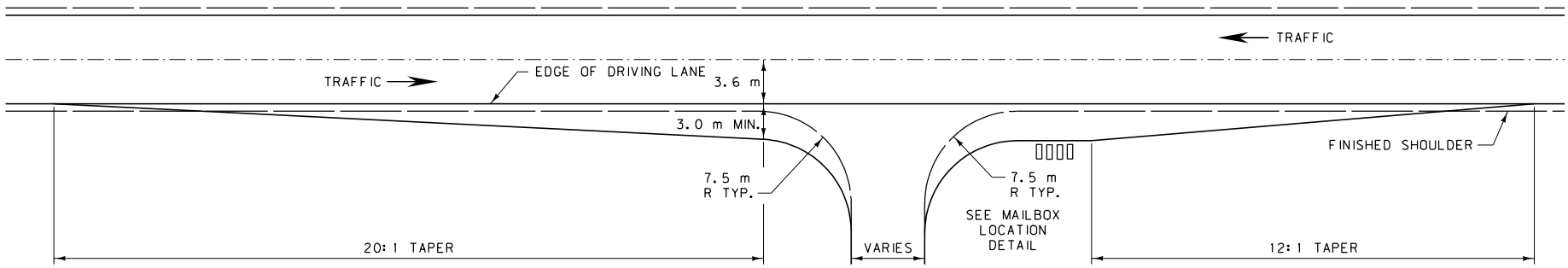

TURNOUT WITH APPROACH

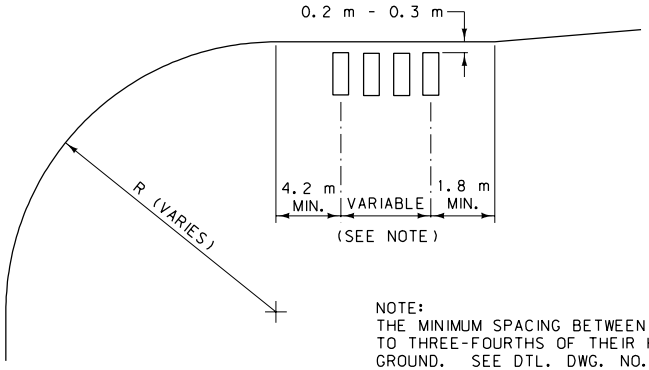

NOTE:
THE MINIMUM SPACING BETWEEN MAILBOXES IS EQUAL TO THREE-FOURTHS OF THEIR HEIGHT ABOVE THE GROUND. SEE DTL. DWG. NO. 900-05 AND 900-10 FOR MAILBOX DETAILS.

MAILBOX LOCATION DETAIL

NOTES:

LOCATE NEW INSTALLATIONS, IF POSSIBLE, ON THE FAR RIGHT SIDE OF AN INTERSECTION WITH A PUBLIC ROAD OR PRIVATE DRIVEWAY.

APPROACH QUANTITIES ARE NOT INCLUDED IN TURNOUT QUANTITIES.

USE THIS DETAIL FOR ALL ROADS AND ADT. FOR ADT LESS THAN 400, STEEPER TAPERS ARE ALLOWED IF NEEDED DUE TO LIMITATIONS. SEE THE "AASHTO GUIDE FOR ERECTING MAILBOXES ON HIGHWAYS."

ALL DIMENSIONS ARE MILLIMETERS (mm) UNLESS OTHERWISE NOTED.

DETAILED DRAWING	
REFERENCE STANDARD SPEC. SECTION 203	DWG. NO. 203-15
MAILBOX TURNOUT	
EFFECTIVE: FEBRUARY 2005	

MDT serving you with pride — MONTANA DEPARTMENT OF TRANSPORTATION

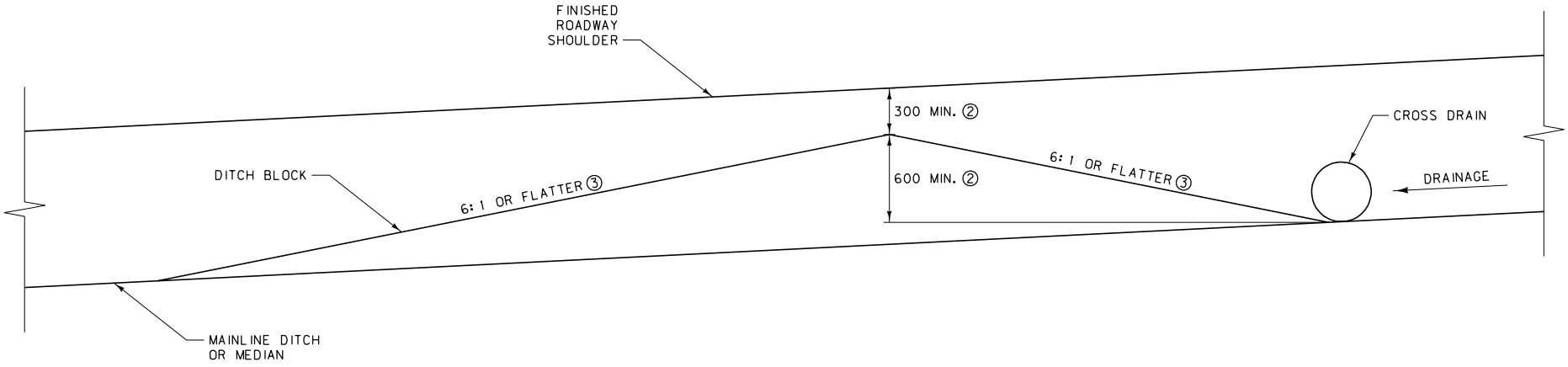

NOTES:

① CONSTRUCT DITCH BLOCKS TO FIT LOCAL CONDITIONS.

② HEIGHTS SHOWN ARE MINIMUMS. SET HEIGHT OF DITCH BLOCKS BASED ON AMOUNT OF ANTICIPATED DRAINAGE.

③ 10: 1 SLOPES ARE DESIRABLE ON HIGH SPEED FACILITIES WHERE PRACTICAL.

ALL DIMENSIONS ARE MILLIMETERS (mm) UNLESS OTHERWISE NOTED.

DETAILED DRAWING	
REFERENCE STANDARD SPEC. SECTION 203	DWG. NO. 203-20
DITCH BLOCKS	
EFFECTIVE: FEBRUARY 2005	
serving you with pride	MONTANA DEPARTMENT OF TRANSPORTATION

SCHEDULE OF BEST MANAGEMENT PRACTICES (BMPs)		
NAME	DESCRIPTION	DTL. DWG. NO. (208-##)
GENERAL BMP's		
IO	INLET/OUTLET PROTECTION	1A
WP	WATERWAY PROTECTION	1B
WR	WATER RESOURCE PROTECTION	1C
TEMPORARY SOIL STABILIZATION BMPs (SS)		
SS-2	PRESERVATION OF EXISTING VEGETATION	02
SS-3	HYDRAULIC MULCH	04
SS-4	TEMPORARY SEEDING	06
SS-5	SOIL BINDERS	08
SS-6	STRAW MULCH	10
SS-7	GEOTEXTILES, PLASTIC COVERS & EROSION CONT. BLANKETS/MATS	12A & 12B
SS-8	WOOD MULCH	14
SS-9	EARTH DIKES/DRAINAGE SWALES & LINED DITCHES	16
SS-10	OUTLET PROTECTION/VELOCITY DISSIPATION DEVICES	18
SS-11	SLOPE DRAINS	20
SS-12	SLOPE ROUGHENING	22
SS-13	TERRACED SLOPES	24
SS-14	VEGETATED BUFFER	26
SS-15	EROSION SEEDING	28
TEMPORARY SEDIMENT CONTROL BMPs (SC)		
SC-1	SILT FENCE	30
SC-2	DESILTING BASIN	32A & 32B
SC-3	SEDIMENT TRAP	34
SC-4	CHECK DAMS	36
SC-5	FIBER ROLLS	38
SC-6	GRAVEL BAG BERM	40
SC-8	SAND BAG BARRIERS	42
SC-9	STRAW BALE BARRIERS	44
SC-10	STORM DRAIN INLET PROTECTION	46A & 46B
SC-11	DUGOUT DITCH BASIN	48
WIND EROSION CONTROL BMPs (WE)		
WE-1	WIND EROSION CONTROL	50
SNOW ACCUMULATION & SNOW MELT BMPs (SN)		
SN-2	SNOW ACCUMULATION MANAGEMENT	52
SN-3	FREEZE REDUCTION	54
TRACKING CONTROL BMPs (TC)		
TC-1	STABILIZED CONSTRUCTION ENTRANCE/EXIT	56
TC-3	ENTRANCE/OUTLET TIRE WASH	58
NON-STORM WATER MANAGEMENT BMPs (NS)		
NS-4	TEMPORARY STREAM CROSSINGS	60

ALL DIMENSIONS ARE MILLIMETERS (mm) UNLESS OTHERWISE NOTED.

DETAILED DRAWING

REFERENCE STANDARD SPEC. SECTION 208

DWG. NO. 208-00

SCHEDULE OF BEST MANAGEMENT PRACTICES

EFFECTIVE: FEBRUARY 2005

serving you with pride

MONTANA DEPARTMENT OF TRANSPORTATION

SYMBOL: I/O

INLET/OUTLET PROTECTION:

INLET/OUTLET PROTECTION (I/O) ARE STRUCTURES ASSOCIATED WITH SEDIMENT REMOVAL AT INLETS AND SEDIMENT REMOVAL AT PIPE OUTLETS. THE PURPOSE OF THIS BMP IS TO ALLOW STORM WATERS OF INTERMITTENT DRAINAGES TO FLOW THROUGH DISTURBED AREAS WITH MINIMAL IMPACT DURING STORM EVENTS AND TO KEEP SEDIMENT FROM LEAVING MDT PROPERTY.

INLET/OUTLET PROTECTION IS USED AT CULVERT INSTALLATIONS THAT DISCHARGE DIRECTLY INTO A WATER RESOURCE OR CULTURAL AND HISTORICAL RESOURCE ADJACENT TO THE RIGHT-OF-WAY LINE. DO NOT USE INLET/OUTLET PROTECTION ON STOCK UNDERPASSES OR APPROACH CULVERTS.

APPROPRIATE BMP FEATURES INCLUDE OUTLET PROTECTION/VELOCITY DISSIPATION DEVICES, SILT FENCE, DESILTING BASIN, SEDIMENT TRAP, CHECK DAMS, FIBER ROLLS, GRAVEL BAG BERM, SAND BAG BARRIER, STRAW BALE BARRIER AND STORM DRAIN INLET PROTECTION. THIS BMP LIST IS NOT COMPREHENSIVE AND DOES NOT SUPERSEDE MDT STANDARD SPECIFICATIONS OR MANDATES AND REQUIREMENTS SPECIFIED BY OTHER AUTHORIZED STATE AND FEDERAL AGENCIES.

INTERMITTENT/EPHEMERAL FLOW
AND CONSTRUCTION SEASON
TERMINATION/WINTER SUSPENSION

CULVERT INSTALLATION
WITH INTERMITTENT FLOW

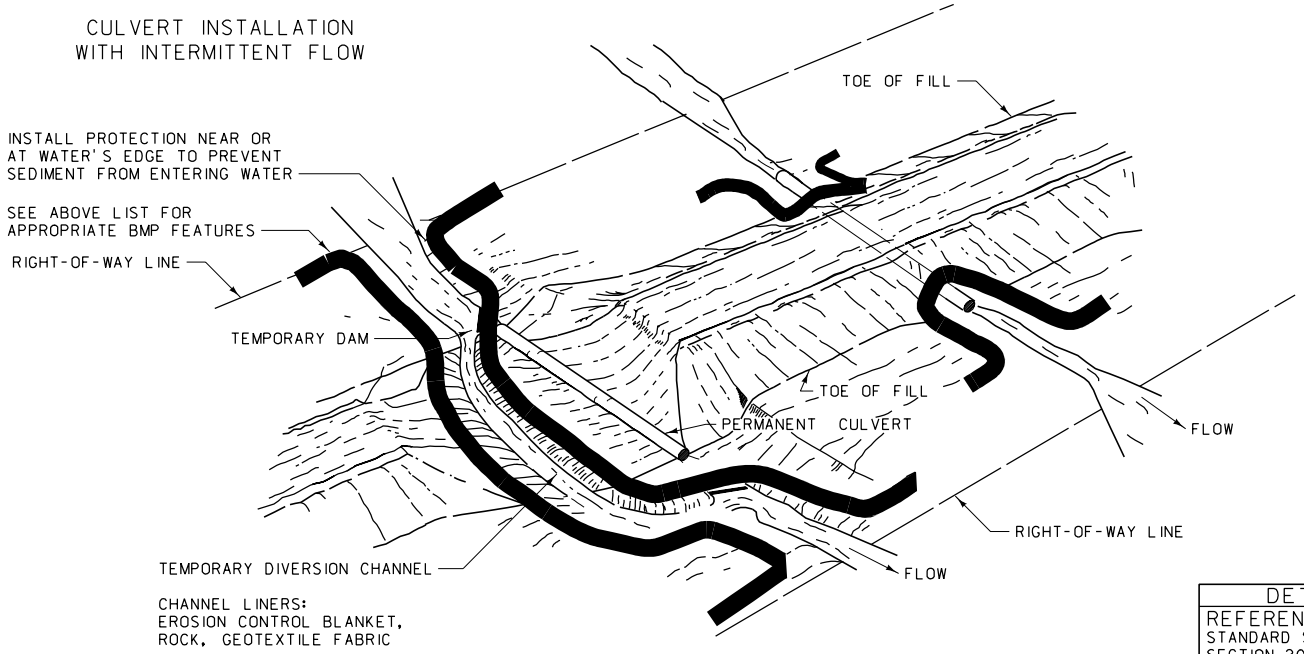

ALL DIMENSIONS ARE MILLIMETERS (mm) UNLESS OTHERWISE NOTED.

DETAILED DRAWING	
REFERENCE STANDARD SPEC. SECTION 208	DWG. NO. 208-1A
INLET/OUTLET PROTECTION	
EFFECTIVE: FEBRUARY 2005	

MDT serving you with pride — MONTANA DEPARTMENT OF TRANSPORTATION

SYMBOL: WP

WATERWAY PROTECTION:

WATERWAY PROTECTION (WP) IS AN EROSION CONTROL FOR CONSTRUCTION ACTIVITIES CROSSING WATER RESOURCES. WATERWAY PROTECTION APPLIES TO PERENNIAL STREAM CROSSINGS, WETLANDS, CHANNEL CHANGES, STREAM BANK DISTURBANCES, IRRIGATION SYSTEMS OR OTHER IMPACTS TO WATER RESOURCES FROM BRIDGE CONSTRUCTION OR CULVERT INSTALLATIONS.

APPROPRIATE BMP FEATURES INCLUDE EROSION CONTROL BLANKETS/MATS, SLOPE ROUGHENING, VEGETATIVE BUFFER STRIP, SILT FENCE, CHECK DAMS, FIBER ROLLS, GRAVEL BAG BERM, SAND BAG BARRIER, AND STRAW BALE BARRIER. THIS BMP LIST IS NOT COMPREHENSIVE AND DOES NOT SUPERSEDE MDT STANDARD SPECIFICATIONS OR MANDATES AND REQUIREMENTS SPECIFIED BY OTHER AUTHORIZED STATE AND FEDERAL AGENCIES.

PERENNIAL STREAM CROSSING

BRIDGE/CULVERT INSTALLATION

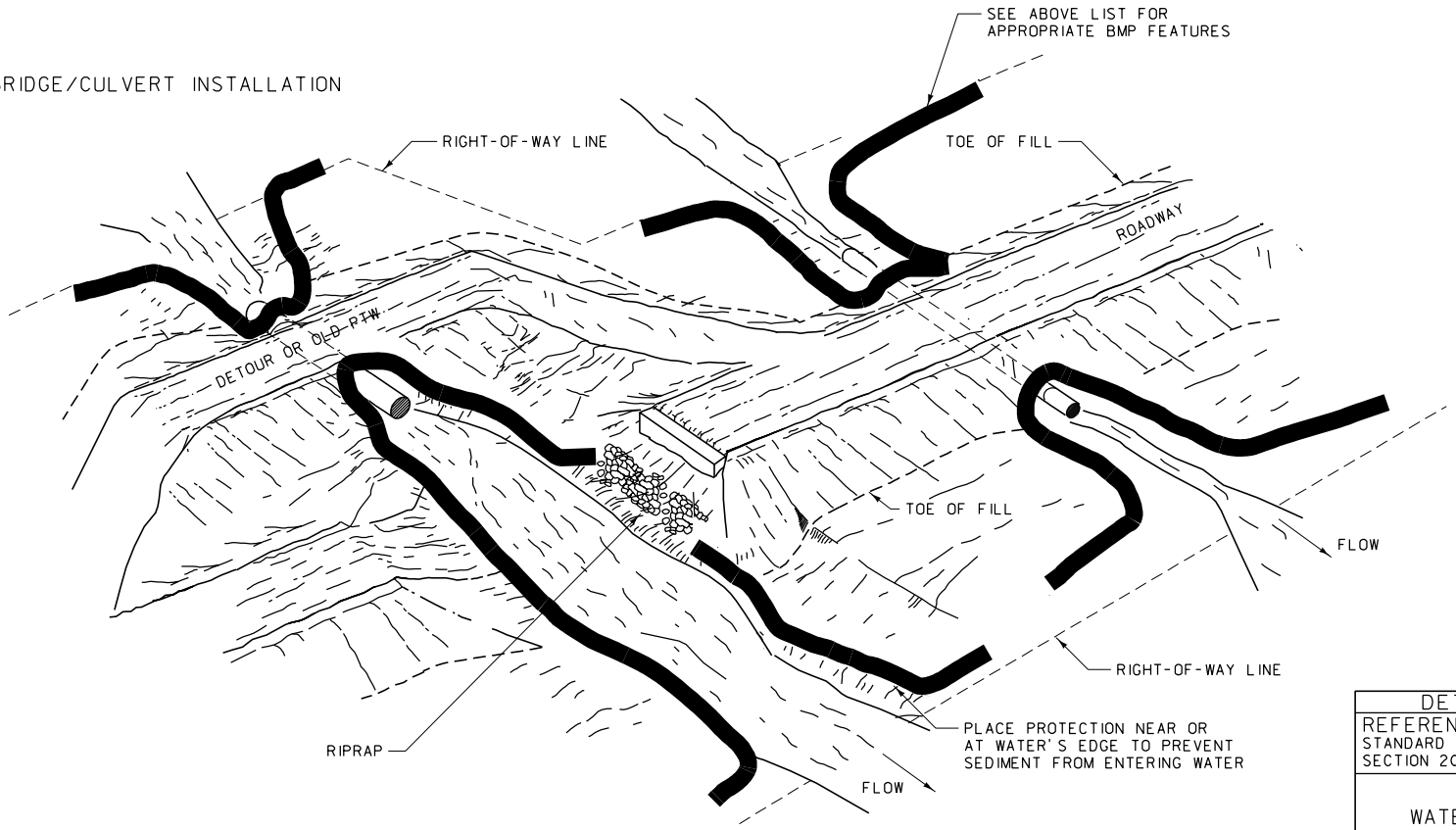

ALL DIMENSIONS ARE MILLIMETERS (mm) UNLESS OTHERWISE NOTED.

DETAILED DRAWING	
REFERENCE STANDARD SPEC. SECTION 208	DWG. NO. 208-1B
WATERWAY PROTECTION	
EFFECTIVE: FEBRUARY 2005	

MDT serving you with pride — MONTANA DEPARTMENT OF TRANSPORTATION

SYMBOL: WR

WATER RESOURCE PROTECTION:

WATER RESOURCE PROTECTION (WR) IS EROSION CONTROL FOR CONSTRUCTION ACTIVITIES ADJACENT TO WATER RESOURCES. WATER RESOURCE PROTECTION APPLIES TO PERENNIAL STREAMS, WETLANDS, CHANNEL CHANGES, STREAM BANK DISTURBANCES, IRRIGATION SYSTEMS OR OTHER IMPACTS TO WATER RESOURCES FROM ROAD CONSTRUCTION. IT CAN BE USED FOR CRITICAL RESOURCES. THE DESIGNER DENOTES "CRITICAL RESOURCE" ON THE PLANS AND PUTS WATER RESOURCE PROTECTION WITH IT.

APPROPRIATE BMP FEATURES INCLUDE EROSION CONTROL BLANKETS/MATS, SLOPE ROUGHENING, VEGETATIVE BUFFER STRIP, SILT FENCE, CHECK DAMS, FIBER ROLLS, GRAVEL BAG BERM, SAND BAG BARRIER, AND STRAW BALE BARRIER. THIS BMP LIST IS NOT COMPREHENSIVE AND DOES NOT SUPERSEDE MDT STANDARD SPECIFICATIONS OR MANDATES AND REQUIREMENTS SPECIFIED BY OTHER AUTHORIZED STATE AND FEDERAL AGENCIES.

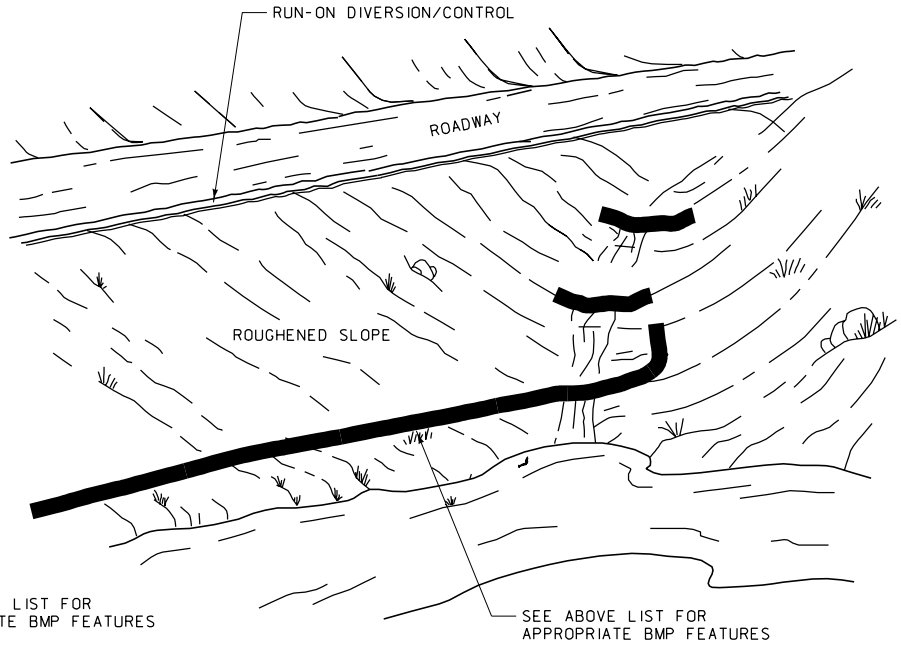

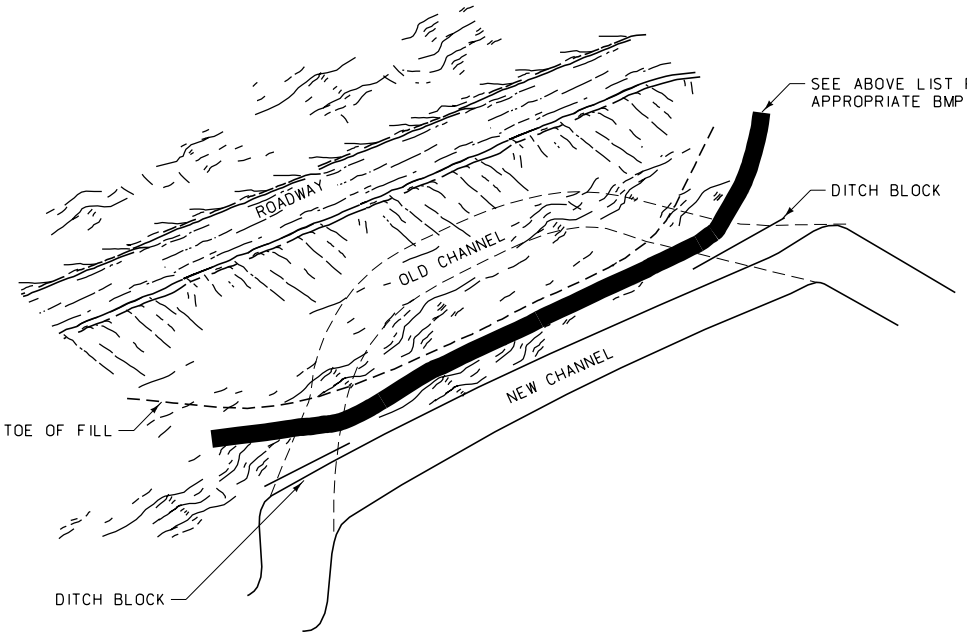

ALL DIMENSIONS ARE MILLIMETERS (mm) UNLESS OTHERWISE NOTED.

DETAILED DRAWING	
REFERENCE STANDARD SPEC. SECTION 208	DWG. NO. 208-1C
WATER RESOURCE PROTECTION	
EFFECTIVE: FEBRUARY 2005	
serving you with pride	MONTANA DEPARTMENT OF TRANSPORTATION

SYMBOL: ———— PEV ————

PRESERVATION OF EXISTING VEGETATION SS-2:

PRESERVATION OF EXISTING VEGETATION IS THE IDENTIFICATION AND PROTECTION OF DESIRABLE VEGETATION THAT PROVIDES EROSION AND SEDIMENT CONTROL BENEFITS. PROVIDE PRESERVATION OF EXISTING VEGETATION PRIOR TO COMMENCEMENT OF CLEARING AND GRUBBING OPERATIONS OR OTHER SOIL DISTURBING ACTIVITIES. MARK THE AREA AS DESIGNATED ON THE CONSTRUCTION PLANS USING TEMPORARY FENCING MADE OF ORANGE POLYPROPYLENE THAT IS STABILIZED AGAINST ULTRAVIOLET LIGHT. AFFIX FENCING TO METAL "T" POST USING 3.05 mm WIRE. PLACE FENCING AN ADEQUATE DISTANCE FROM TREES AND BUSHES TO PREVENT ROOT AND IRRIGATION SYSTEM DAMAGE.

UPON WRITTEN APPROVAL BY THE ENGINEER, THE CONTRACTOR MAY BE ALLOWED TO FLAG OR VERBALLY DESIGNATE AREAS OF EXISTING VEGETATIVE PRESERVATION.

PRESERVATION OF EXISTING VEGETATION MAY BE USED IN CONJUNCTION WITH VEGETATIVE BUFFER (SS-14), WIND EROSION CONTROL (WE-1) AND SNOW ACCUMULATION (SN-1).

FOLLOW CLEAR ZONE REQUIREMENTS FOR ALL FENCING PLACED WITHIN THE CLEAR ZONES.

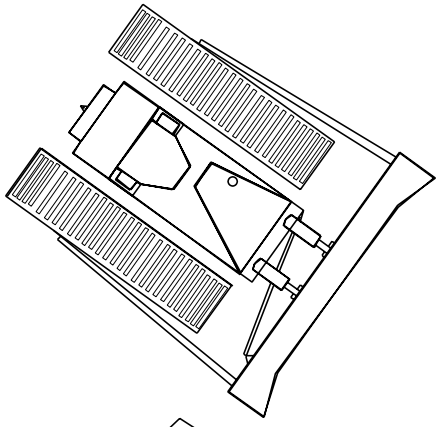

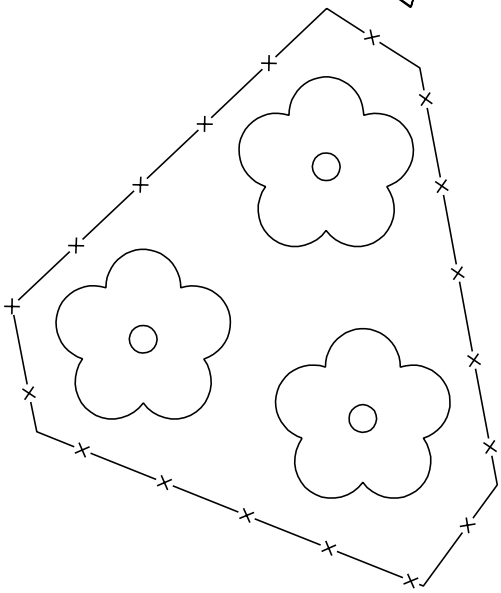

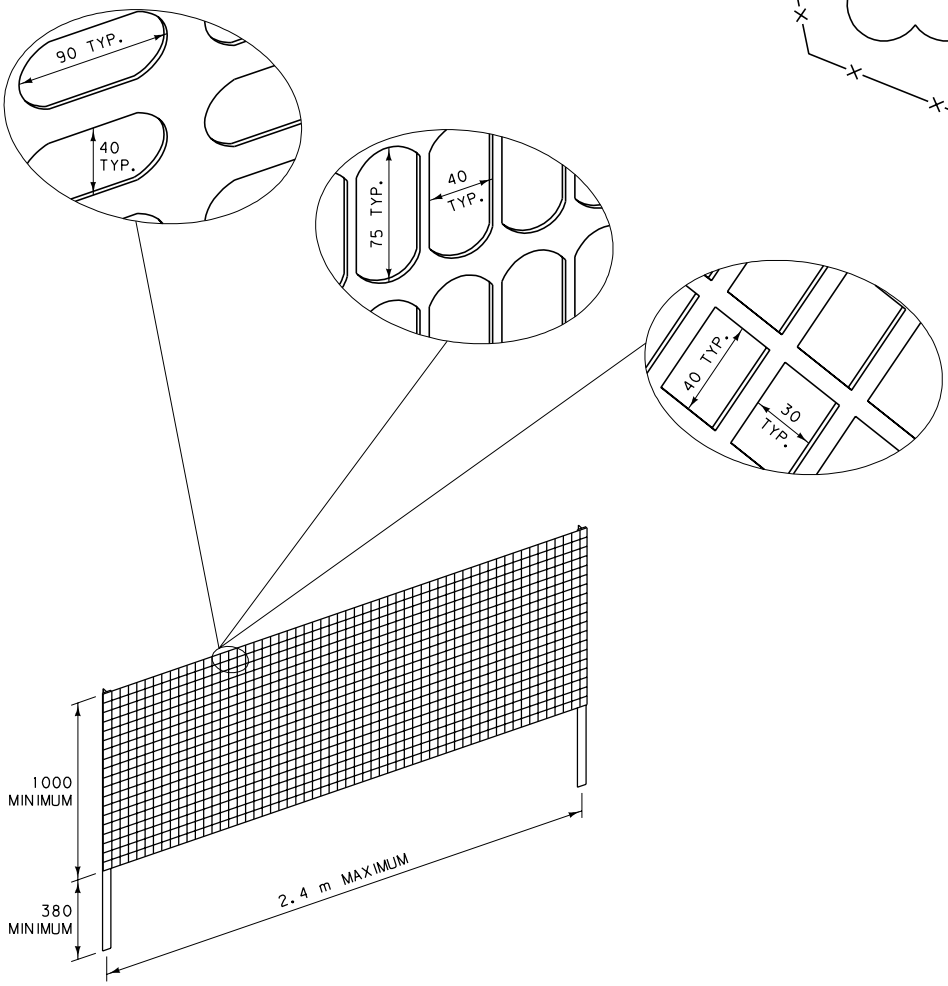

ALL DIMENSIONS ARE MILLIMETERS (mm) UNLESS OTHERWISE NOTED.

DETAILED DRAWING	
REFERENCE STANDARD SPEC. SECTION 208	DWG. NO. 208-02
PRESERVATION OF EXISTING VEGETATION (SS-2)	
EFFECTIVE: FEBRUARY 2005	
serving you with pride	MONTANA DEPARTMENT OF TRANSPORTATION

SYMBOL: ———— HM ————

HYDRAULIC MULCH SS-3:

HYDRAULIC MULCH CONSISTS OF APPLYING A MIXTURE OF SMALL PIECES OF CELLULOSE FIBERS WHICH CAN BE MADE FROM SHREDDED WOOD FIBERS OR RECYCLED PAPER AND A STABILIZING EMULSION AND TACKIFIER (SUBJECT TO ENGINEERS DISCRETION) USING HYDRO-MULCHING EQUIPMENT. HYDRAULIC MULCH IS APPLIED TO DISTURBED AREAS REQUIRING TEMPORARY PROTECTION UNTIL PERMANENT VEGETATION IS ESTABLISHED OR DISTURBED AREAS THAT MUST BE RE-DISTURBED FOLLOWING AN EXTENDED PERIOD OF INACTIVITY.

APPLY HYDRAULIC MULCH A MINIMUM OF 24 HOURS PRIOR TO A STORM EVENT TO ALLOW FOR ADEQUATE DRYING.

HYDRAULIC MULCH SELECTION MUST MEET MDT SPECIFICATIONS AND BE APPROVED BY THE ENGINEER PRIOR TO PLACEMENT. ROUGHEN EXISTING EMBANKMENT FOLLOWING GUIDELINES SPECIFIED IN BMP SS-12. WHEN EITHER TEMPORARY SEEDING OR PERMANENT SEEDING IS COMBINED WITH THE HYDRAULIC MULCH BMP, COMPLETE SEEDING OPERATIONS PRIOR TO HYDRAULIC MULCHING OPERATIONS. REFER TO BMPs SS-4 AND SS-5 FOR SEEDING REQUIREMENTS. REMOVE ANY OVER SPRAY FROM ROADWAYS OR SIDEWALKS IMMEDIATELY FOLLOWING APPLICATION.

REAPPLY HYDRAULIC MULCH TO ANY DISTURBED AREAS FOLLOWING A RAIN EVENT OR RESULTING FROM CONSTRUCTION ACTIVITIES.

RECYCLED PAPER MULCH SHOULD CONTAIN 100% POST CONSUMED PAPER.

REFER TO BMP SS-5 (SOIL BINDER) FOR TACKIFIER REQUIREMENTS. ADD ENVIRONMENTALLY SAFE GREEN DYE AS A VISUAL AID DURING APPLICATION.

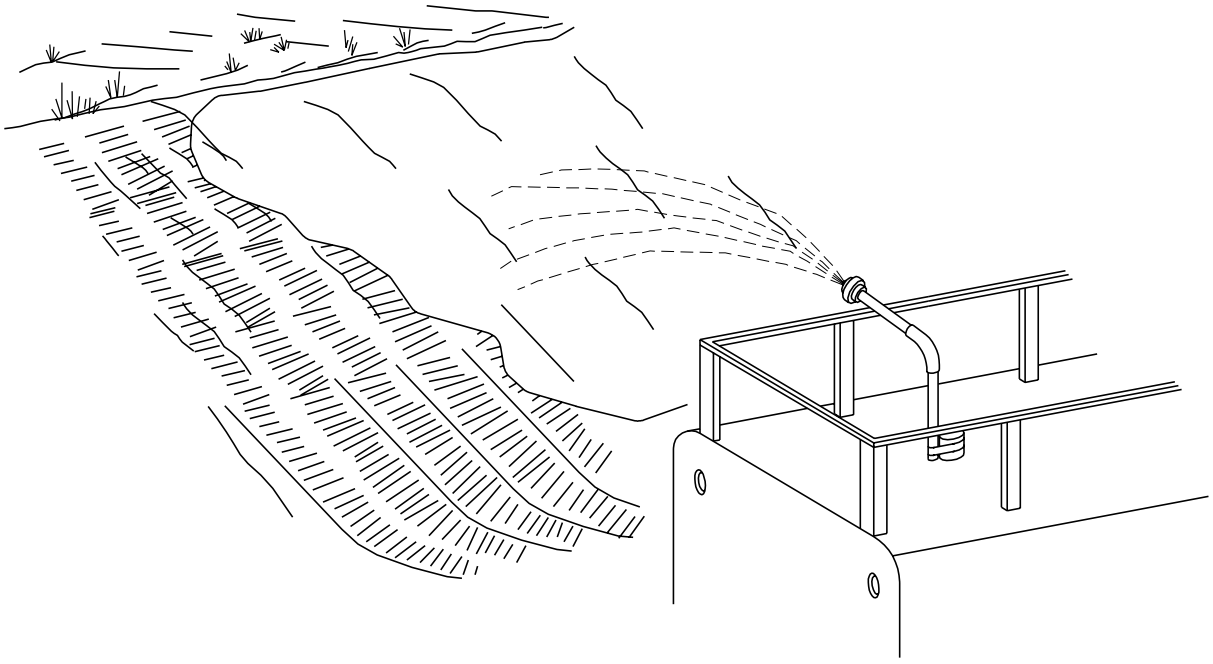

HYDRAULIC MULCH		
PRODUCT	MATERIAL	APPLICATION RATE *
PAPER-BASED HYDRAULIC MULCH	PAPER	1 120 kg/ha (MIN)
WOOD-BASED HYDRAULIC MULCH	WOOD OR WOOD & PAPER	1 120 kg/ha (MIN)

* APPLICATION RATES VARY WITH SLOPE & MUST BE APPROVED BY THE ENGINEER

ALL DIMENSIONS ARE MILLIMETERS (mm) UNLESS OTHERWISE NOTED.

DETAILED DRAWING

REFERENCE STANDARD SPEC. SECTION 208

DWG. NO. 208-04

HYDRAULIC MULCH (SS-3)

EFFECTIVE: FEBRUARY 2005

MDT serving you with pride — MONTANA DEPARTMENT OF TRANSPORTATION

SYMBOL: ———— TS ————

TEMPORARY SEEDING SS-4:

TEMPORARY SEEDING IS THE ESTABLISHMENT OF A TEMPORARY VEGETATIVE COVER BY SEEDING WITH CEREAL BARLEY. USE TEMPORARY SEEDING ON AREAS 3:1 OR FLATTER THAT WILL BE EXPOSED FOR LONGER THAN 14 DAYS AND THAT WILL UNDERGO FURTHER DISTURBANCE, EXCLUDE ROCK SLOPES THAT CANNOT BE EXCAVATED BY RIPPING.

SEEDING DATES AND APPLICATION RATES ARE AS FOLLOWS:

APR. 1 TO JUN. 30: CEREAL BARLEY AT 13.5 kg/ha
JUL. 1 TO AUG. 31: TEMPORARY SEEDING NOT RECOMMENDED
SEP. 1 TO NOV. 15: CEREAL BARLEY AT 13.5 kg/ha

DO NOT TEMPORARY SEED FROM SEP. 1 TO NOV. 15 IF THE AREA IS TO BE PERMANENTLY SEEDED THAT FALL.

CONTACT THE MDT AGRONOMIST, THROUGH THE ENGINEER, PRIOR TO USING SUBSTITUTIONS OR PLACING TEMPORARY SEEDING OUTSIDE THESE DATES. DRILL SEED SLOPES OF 3:1 OR FLATTER. FOR SLOPES STEEPER THAN 3:1, REFER TO EROSION SEEDING.

ANY TEMPORARY SEEDING EFFORTS THAT DO NOT PROVIDE ADEQUATE COVER MUST BE RE SEEDED AS REQUIRED BY THE ENGINEER.

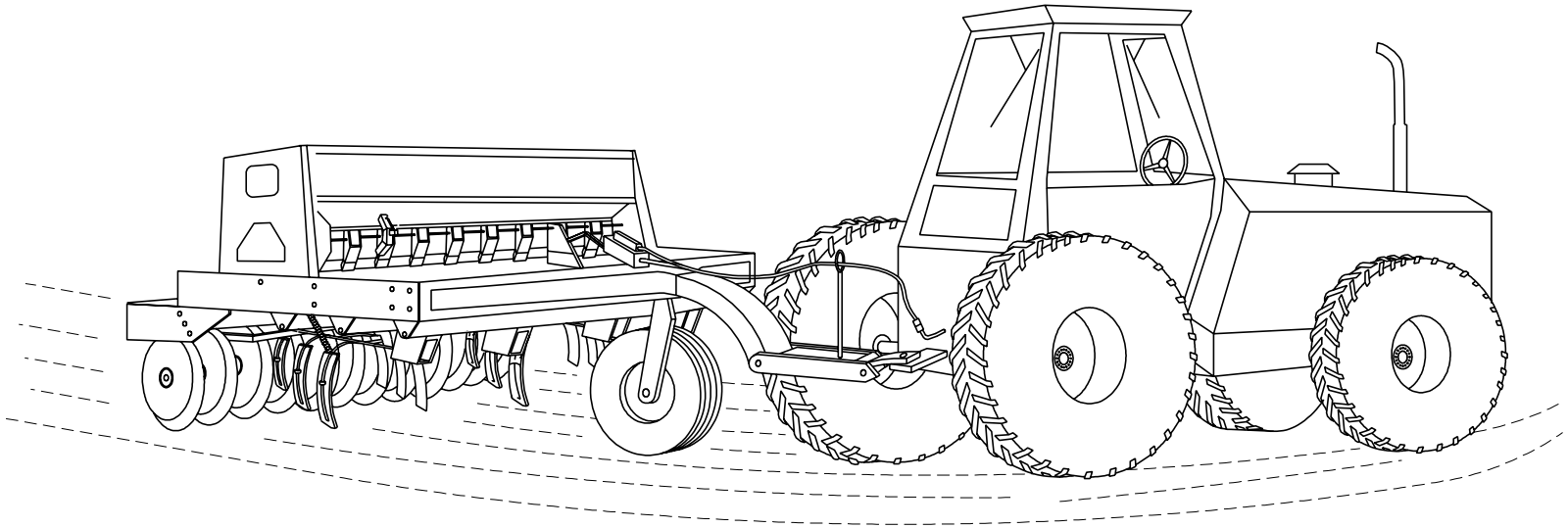

SLOPES 3:1 OR FLATTER

ALL DIMENSIONS ARE MILLIMETERS (mm) UNLESS OTHERWISE NOTED.

DETAILED DRAWING	
REFERENCE STANDARD SPEC. SECTION 208	DWG. NO. 208-06
TEMPORARY SEEDING (SS-4)	
EFFECTIVE: FEBRUARY 2005	
serving you with pride	MONTANA DEPARTMENT OF TRANSPORTATION

SYMBOL: ———— SB ————

SOIL BINDERS SS-5:

SOIL BINDERS CONSIST OF APPLYING AND MAINTAINING POLYMERIC OR LIGNIN SULFONATE SOIL STABILIZERS OR EMULSIONS. SOIL BINDERS ARE MATERIALS APPLIED TO THE SOIL SURFACE TO TEMPORARILY PREVENT WATER-INDUCED EROSION OF EXPOSED SOILS ON CONSTRUCTION SITES. SOIL BINDERS TYPICALLY ALSO PROVIDE DUST, WIND AND SOIL STABILIZATION BENEFITS. BECAUSE SOIL BINDERS CAN OFTEN BE INCORPORATED INTO THE WORK, THEY MAY BE A GOOD CHOICE FOR AREAS WHERE GRADING ACTIVITIES MAY SOON RESUME.

DUE TO THE TEMPORARY NATURE OF SOIL BINDERS, REAPPLICATION MAY BE REQUIRED OVER AREAS WITH PEDESTRIAN AND VEHICLE TRAFFIC.

SOIL BINDER TYPE AND APPLICATION PROCEDURES REQUIRE THE ENGINEER'S APPROVAL PRIOR TO PLACEMENT. APPLY PER MANUFACTURES SPECIFICATIONS.

REAPPLY SOIL BINDERS, AS SPECIFIED BY THE ENGINEER, IN HIGH TRAFFIC AREAS AND FOLLOWING RAIN EVENTS TO ENSURE AN ADEQUATELY MAINTAINED SURFACE.

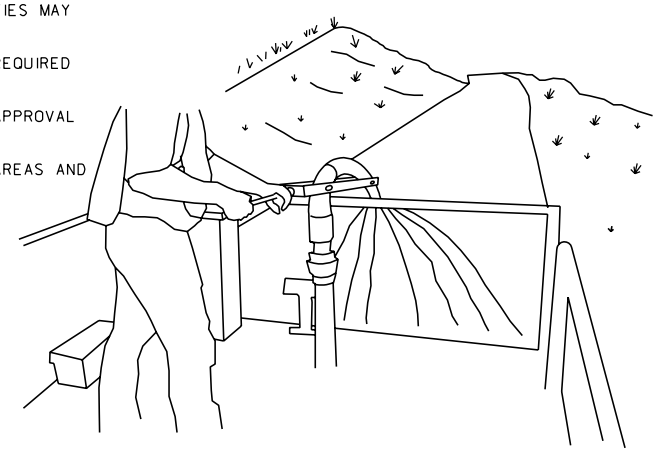

PROPERTIES OF SOIL BINDERS FOR EROSION CONTROL				
CHEMICALS	COPOLYMER	LIGNIN SULFONATE	PSYLLIUM	GUAR
COMMENTS	FORMS SEMIPERMEABLE TRANSPARENT CRUST. RESISTS ULTRAVIOLET RADIATION & MOISTURE INDUCED BREAKDOWN.	PAPER INDUSTRY WASTE PRODUCT. ACTS AS DISPERSING AGENT. BEST IN DRY CLIMATES. CAN BE SLIPPERY.	EFFECTIVE ON DRY, HARD SOILS. FORMS A CRUST.	EFFECTIVE ON DRY, HARD SOILS. FORMS A CRUST.
RELATIVE COST	HIGH	MODERATE	LOW	LOW
ENVIRONMENTAL HAZARD	LOW	LOW	LOW	LOW
PENETRATION	MODERATE	MODERATE	HIGH	HIGH
EVAPORATION	MODERATE	MODERATE	MODERATE	MODERATE
LEACHING RESISTANCE	LOW	HIGH	HIGH	HIGH
ABRASION RESISTANCE	HIGH	LOW	MODERATE	MODERATE
LONGEVITY	1 TO 2 YEARS	6 MONTHS TO 1 YEAR	3 TO 6 MONTHS	3 TO 6 MONTHS
MINIMUM CURING TIME BEFORE RAIN	24 HOURS	24 HOURS	24 HOURS	24 HOURS
COMPATIBILITY WITH EXISTING VEGETATION	GOOD	POOR	POOR	POOR
MODE OF DEGRADATION	CHEMICALLY DEGRADABLE	BIOLOGICALLY/PHYSICALLY/CHEMICALLY	BIOLOGICALLY DEGRADABLE	BIOLOGICALLY DEGRADABLE
LABOR INTENSIVE	NO	NO	NO	NO
SPECIALIZED APPL. EQUIPMENT	YES	YES	YES	YES
LIQUID/POWDER	LIQUID	POWDER	POWDER	POWDER
SURFACE CRUSTING	YES	YES, BUT DISSOLVED ON REWETTING	YES, BUT DISSOLVED ON REWETTING	YES, BUT DISSOLVED ON REWETTING
CLEAN-UP	SOLVENTS	SOLVENTS	WATER	WATER
EROSION CONTROL APPLICATION RATE	APPLY 800-1000 l/ha	APPLY 5600-6500 (l/ha)	APPLY 170 kg/ha WITH 560-2200 kg/ha FIBER MULCH	APPLY 110-220 kg/ha WITH 560-2200 kg/ha FIBER MULCH
DUST CONTROL APPLICATION RATE	APPLY 280-520 l/ha	LOOSEN SURFACE 25-50 mm. NEED 4-8% FINES. APPLY 470-1900 l/ha.	APPLY 170 kg/ha.	APPLY 45-70 kg/ha.

ALL DIMENSIONS ARE MILLIMETERS (mm) UNLESS OTHERWISE NOTED.

DETAILED DRAWING

REFERENCE STANDARD SPEC. SECTION 208

DWG. NO. 208-08

SOIL BINDERS (SS-5)

EFFECTIVE: FEBRUARY 2005

MDT serving you with pride — MONTANA DEPARTMENT OF TRANSPORTATION

SYMBOL: ———— SM ————

STRAW MULCH SS-6:

STRAW MULCH CONSISTS OF PLACING A UNIFORM LAYER OF STRAW AND ANCHORING IT INTO THE SOIL WITH A STUDDED ROLLER OR DISK OR BINDING THE STRAW TOGETHER WITH AN ENGINEER APPROVED TACKIFIER.

USE STRAW MULCH FOR SOIL STABILIZATION AS A TEMPORARY SURFACE COVER ON DISTURBED AREAS UNTIL SOILS CAN BE PREPARED OR RE-VEGETATION/PERMANENT VEGETATION IS ESTABLISHED. STRAW MULCH IS COMMONLY USED IN COMBINATION WITH TEMPORARY SEEDING, BMPs SS-4 & SS-15, AND/OR PERMANENT SEEDING TO ENHANCE PLANT ESTABLISHMENT.

ALL STRAW MULCH IS REQUIRED TO BE CERTIFIED WEED FREE AND DERIVED FROM WHEAT, BARLEY OR RICE. ENGINEERS APPROVAL IS REQUIRED PRIOR TO ANY PLACEMENT OF STRAW MULCH.

STRAW MULCH CAN BE APPLIED BY HAND OR BLOWN UNDER LOW WIND CONDITIONS. OBTAIN ENGINEERS APPROVAL FOR PLACEMENT METHODS PRIOR TO PLACEMENT. EVENLY DISTRIBUTE STRAW MULCH AT A MINIMUM LOOSE RATE OF 4 490 kg/ha. IMMEDIATELY FOLLOWING PLACEMENT, CRIMP OR APPLY TACKIFIERS TO RETAIN MULCH. CRIMP USING DISKS OR A PUNCH-TYPE ROLLER. IF TACKIFIERS ARE USED, FOLLOW GUIDELINES PROVIDED IN BMP SS-5. WHEN EITHER TEMPORARY OR PERMANENT SEEDING IS COMBINED WITH THE STRAW MULCH BMP, COMPLETE SEEDING OPERATIONS PRIOR TO STRAW MULCH PLACEMENT. REFER TO BMPs SS-4 AND SS-15 FOR SEEDING GUIDELINES.

REAPPLICATION OF STRAW MULCH AND TACKIFIER MAY BE REQUIRED BY THE ENGINEER TO MAINTAIN EFFECTIVE SOIL STABILIZATION OVER DISTURBED AREAS AND SLOPES.

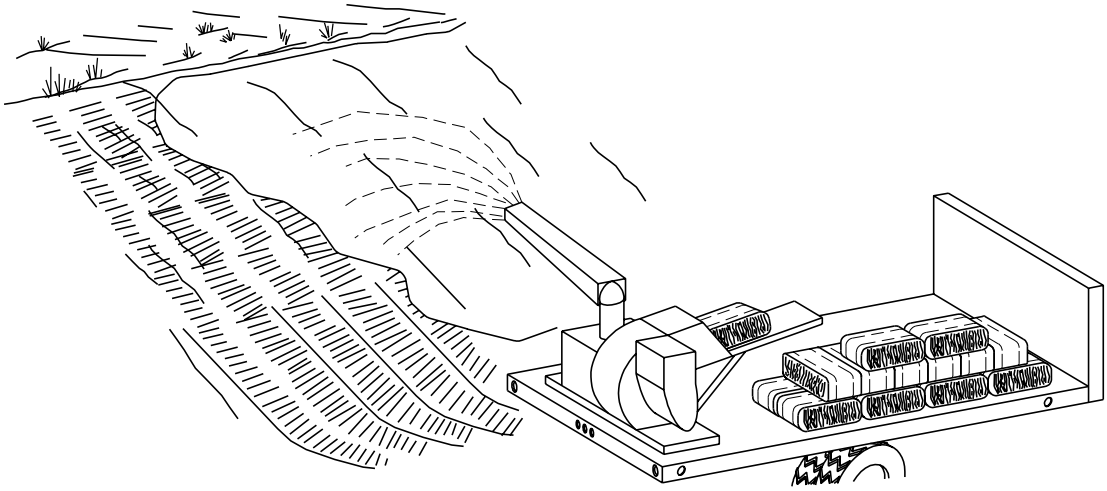

STRAW BLOWER

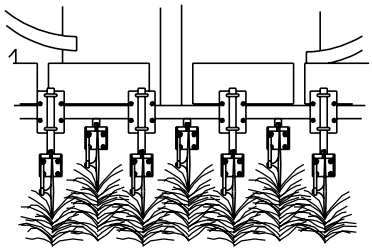

STRAW CRIMPING

ALL DIMENSIONS ARE MILLIMETERS (mm) UNLESS OTHERWISE NOTED.

DETAILED DRAWING	
REFERENCE STANDARD SPEC. SECTION 208	DWG. NO. 208-10
STRAW MULCH (SS-6)	
EFFECTIVE: FEBRUARY 2005	

serving you with pride — MONTANA DEPARTMENT OF TRANSPORTATION

SYMBOL: ——— EC ———

GEOTEXTILES, PLASTIC COVERS & EROSION CONTROL BLANKETS/MATS SS-7:

GEOTEXTILES, PLASTIC COVERS, AND EROSION CONTROL BLANKETS/MATS ARE USED TO STABILIZE DISTURBED SOIL AREAS AND PROTECT SOILS FROM EROSION BY WIND AND WATER. THESE PRODUCTS CAN BE USED ON STEEP SLOPES, SLOPES WITH HIGH EROSION HAZARDS, SLOPES WHERE MULCHES CAN NOT BE ANCHORED, UNPROTECTED CHANNELS AND HIGH FLOW CHANNELS.

INSTALL GEOTEXTILES AND EROSION CONTROL BLANKETS/MATS IN ACCORDANCE WITH MANUFACTURER'S SPECIFICATIONS AND MDT STANDARD SPECIFICATIONS SECTION 622.

PROVIDE GEOTEXTILE MATERIALS MEETING MDT STANDARD SPECIFICATIONS SECTION 713.

LIMIT USE OF PLASTIC COVERS TO COVERING STOCKPILES, OR VERY SMALL GRADED AREAS FOR SHORT PERIODS OF TIME (SUCH AS THROUGH ONE IMMINENT STORM EVENT) UNTIL ALTERNATIVE MEASURES MAY BE INSTALLED. PLASTIC COVERS ARE REQUIRED TO BE POLYETHYLENE SHEETING HAVING A MINIMUM THICKNESS OF 6 mil. ANCHOR PLASTIC COVERS WITH SANDBAGS PLACED NO MORE THAN 3 m APART AND BY KEYING INTO THE TOP OF SLOPE TO PREVENT INFILTRATION OF SURFACE WATERS UNDER THE PLASTIC. TAPE OR WEIGHT DOWN THE ENTIRE LENGTH OF ALL SEAMS WITH AT LEAST A 300 mm TO 600 mm OVERLAP.

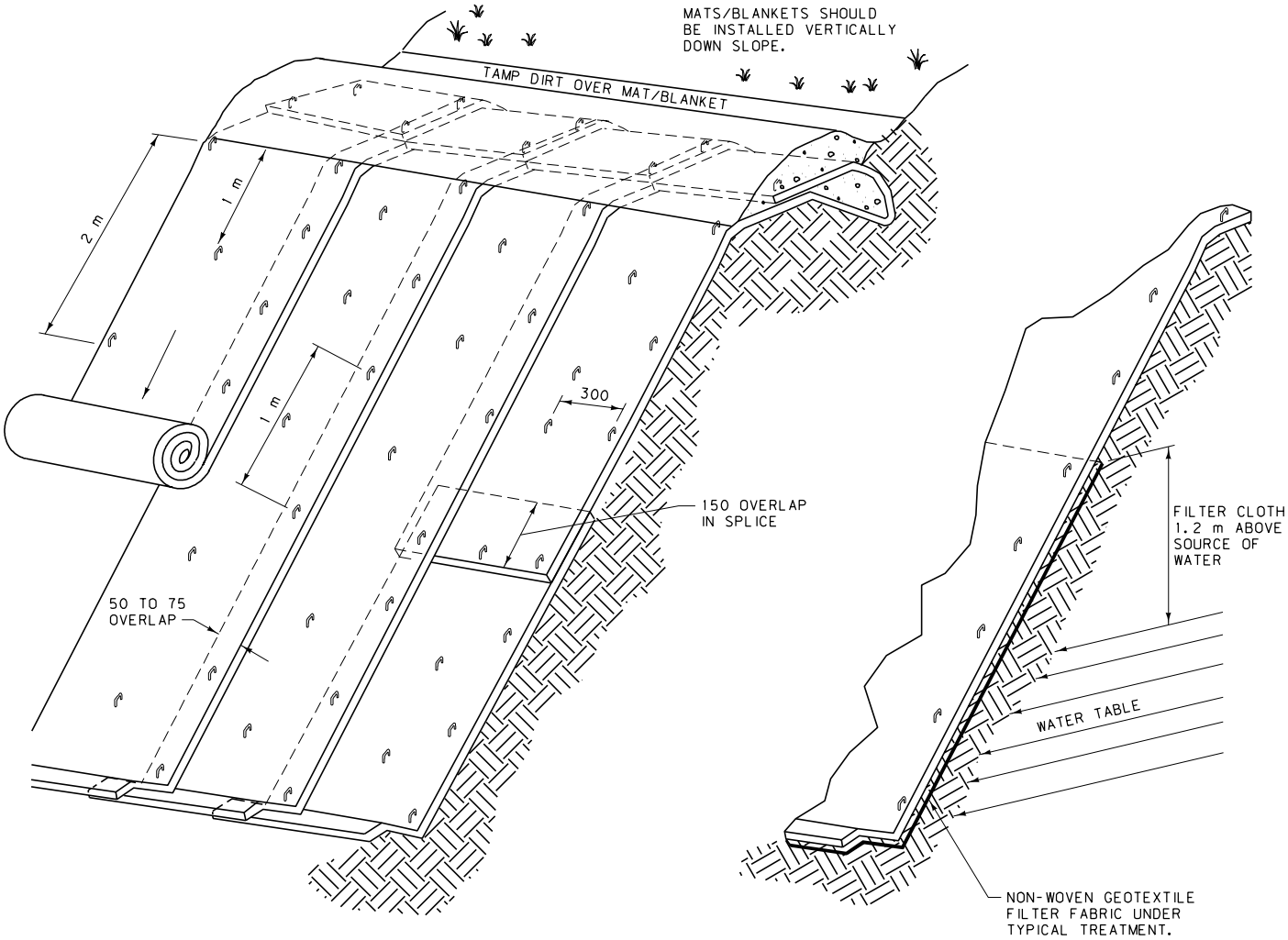

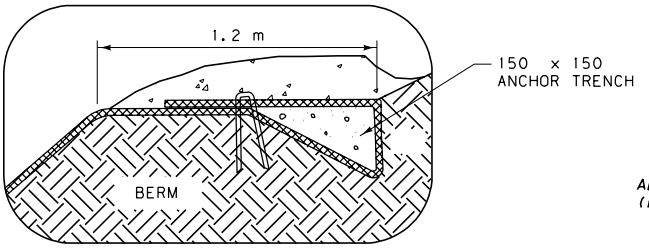

ALL DIMENSIONS ARE MILLIMETERS (mm) UNLESS OTHERWISE NOTED.

DETAILED DRAWING	
REFERENCE STANDARD SPEC. SECTION 208	DWG. NO. 208-12A
GEOTEXTILES, PLASTIC COVERS & EROSION CONT. BLANKETS/ MATS (SS-7) (SHEET 1)	
EFFECTIVE: FEBRUARY 2005	
serving you with pride	MONTANA DEPARTMENT OF TRANSPORTATION

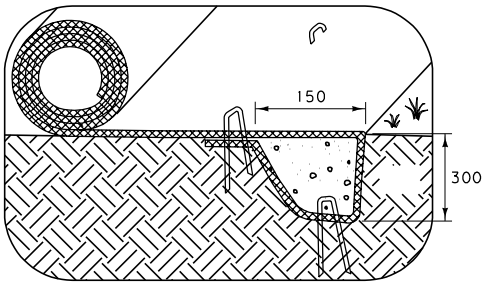

INITIAL CHANNEL ANCHOR TRENCH

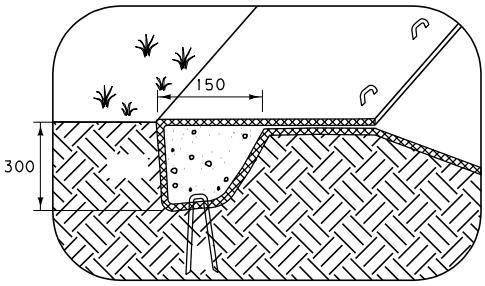

TERMINAL SLOPE & CHANNEL ANCHOR TRENCH

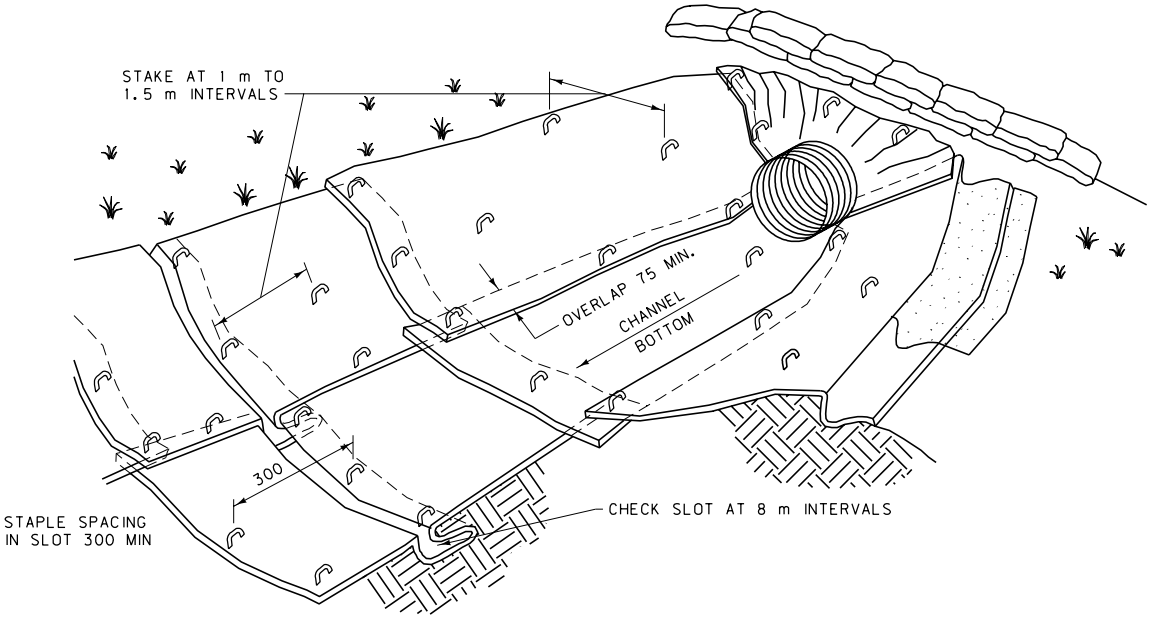

TYPICAL CHANNEL DETAIL - ISOMETRIC VIEW

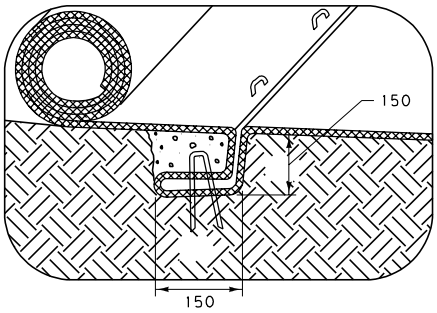

INTERMITTENT CHECK SLOT

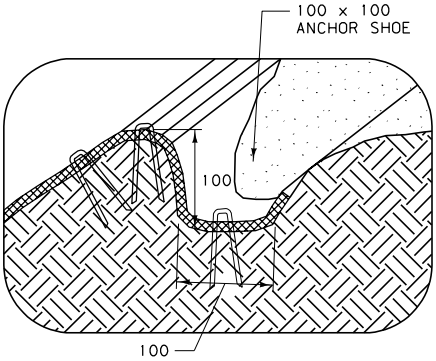

LONGITUDINAL ANCHOR TRENCH

ALL DIMENSIONS ARE MILLIMETERS (mm) UNLESS OTHERWISE NOTED.

DETAILED DRAWING	
REFERENCE STANDARD SPEC. SECTION 208	DWG. NO. 208-12B
GEOTEXTILES, PLASTIC COVERS & EROSION CONT. BLANKETS/ MATS (SS-7) (SHEET 2)	
EFFECTIVE: FEBRUARY 2005	
serving you with pride	MONTANA DEPARTMENT OF TRANSPORTATION

SYMBOL: ———— WM ————

WOOD MULCH SS-8:

WOOD MULCHING CONSISTS OF APPLYING A MIXTURE OF SHREDDED WOOD MULCH, BARK, OR COMPOST. WOOD MULCH IS MOSTLY APPLICABLE TO LANDSCAPE PROJECTS. WOOD MULCHING REDUCES EROSION BY PROTECTING BARE SOIL RAINFALL IMPACT, INCREASING INFILTRATION, AND REDUCING RUNOFF. DO NOT USE WOOD MULCH WHERE CONCENTRATED RUNOFF FLOWS MAY EXIST.

OBTAIN ENGINEERS APPROVAL PRIOR TO PLACEMENT TO VERIFY MULCH CONTAINS SHREDDED WOOD, BARK AND COMPOST THAT IS WEED FREE. PRIOR TO PLACEMENT, ROUGHEN ALL SURFACES IN ACCORDANCE WITH BMP SS-12. FOLLOWING SLOPE ROUGHENING, EVENLY DISTRIBUTE MULCH AT A MINIMUM DEPTH OF 75 mm. WHEN EITHER TEMPORARY OR PERMANENT SEEDING IS COMBINED WITH THE WOOD MULCH BMP, COMPLETE SEEDING OPERATIONS PRIOR TO WOOD MULCH PLACEMENT. REFER TO BMPs SS-4 AND SS-15 FOR SEEDING REQUIREMENTS.

AVOID MULCH PLACEMENT ONTO THE TRAVELED WAY, SIDEWALKS, LINED DRAINAGE CHANNELS, AND EXISTING VEGETATION.

MULCH CAN BE APPLIED BY HAND OR BY PNEUMATIC METHODS.

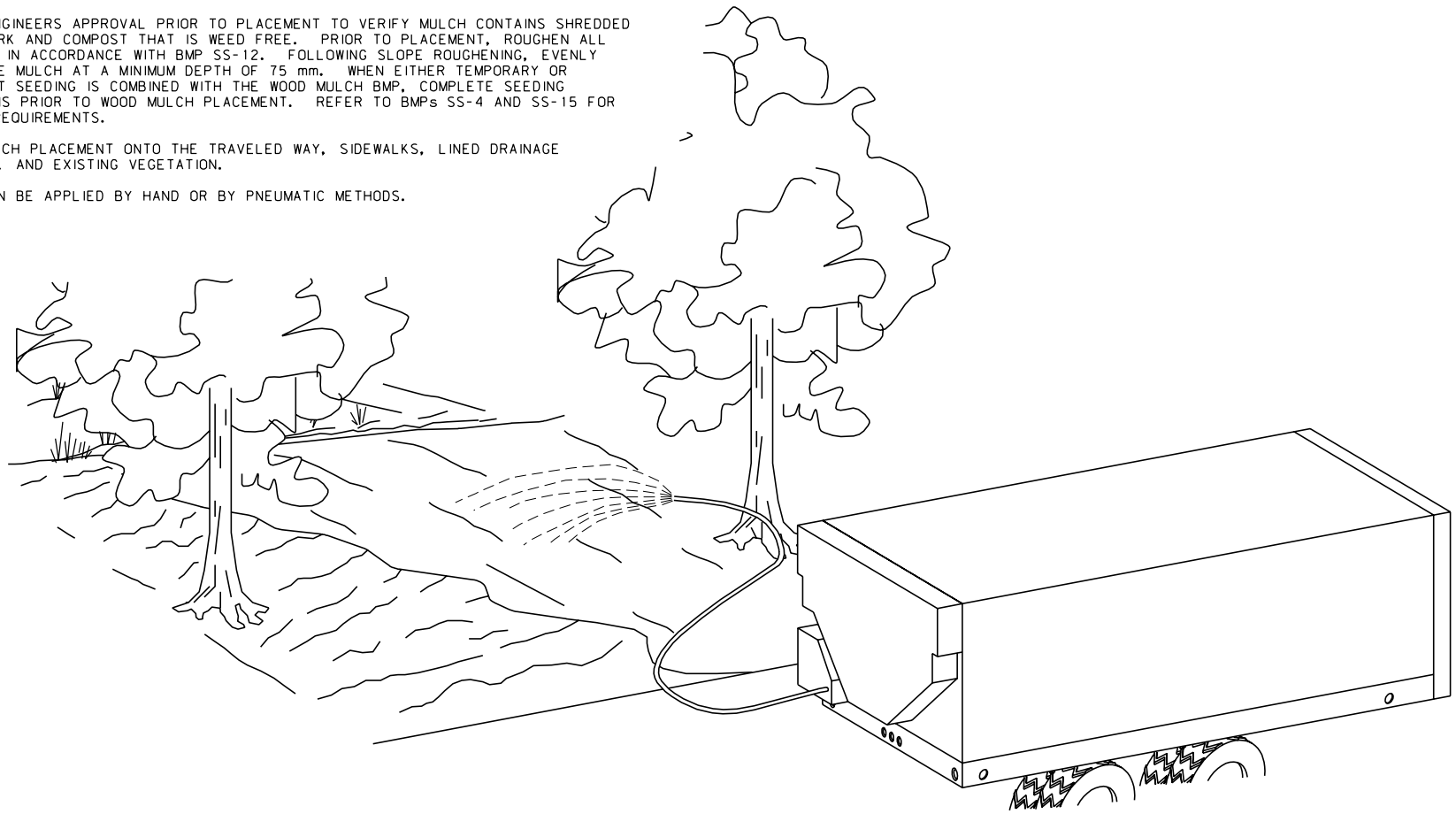

ALL DIMENSIONS ARE MILLIMETERS (mm) UNLESS OTHERWISE NOTED.

DETAILED DRAWING	
REFERENCE STANDARD SPEC. SECTION 208	DWG. NO. 208-14
WOOD MULCH (SS-8)	
EFFECTIVE: FEBRUARY 2005	
serving you with pride	MONTANA DEPARTMENT OF TRANSPORTATION

SYMBOL: ——— ED ———

EARTH DIKES/DRAINAGE SWALES & LINED DITCHES SS-9:

EARTH DIKES, DRAINAGE SWALES AND LINED DITCHES ARE STRUCTURES THAT INTERCEPT, DIVERT, AND CONVEY SURFACE RUN-ON, GENERALLY SHEET FLOW, TO PREVENT EROSION. THESE DEVICES MAY BE IMPLEMENTED ON A PROJECT-BY-PROJECT BASIS WITH OTHER BMPs WHEN DETERMINED NECESSARY AND FEASIBLE BY THE ENGINEER. DIKES, SWALES AND DITCHES ARE CONVEYANCE MEASURES AND ARE NOT INTENDED TO TRAP SEDIMENT. SEDIMENT CONTROL BMPs CAN BE USED IN CONJUNCTION WITH THESE CONVEYANCE DEVICES.

WHEN POSSIBLE, INSTALL AND UTILIZE DIKES, SWALES AND DITCHES EARLY IN THE CONSTRUCTION PHASE. CONSTRUCT SWALES ALONG THE TOP AND BOTTOM OF CUT AND FILL SLOPES, AS SPECIFIED IN THE PLANS OR AS DESIGNATED BY THE ENGINEER. "V" BOTTOM DITCHES CAN BE USED FOR SWALE CONSTRUCTION FOLLOWING ENGINEERS APPROVAL. USE SEDIMENT CONTROL DEVICES FOR RUNOFF THAT IS DIVERTED FROM DISTURBED AREAS. CONVEY FLOWS FROM UNDISTURBED AREAS INTO A STABILIZED AREA AT NON-EROSIVE VELOCITIES. DO NOT PLACE DIKES, SWALES, AND DITCHES IN A MANNER THAT ALLOWS HIGHWAY RUNOFF TO ENTER ONTO OTHER PROPERTY'S RIGHT-OF-WAY.

USE LINED DITCHES FOR AREAS OF HIGH FLOW VELOCITIES FOLLOWING THE GUIDELINES SPECIFIED IN SS-7 (GEOTEXTILES, PLASTIC COVERS & EROSION CONTROL BLANKETS/MATS) AND/OR SS-11 (SLOPE DRAINS). SEED ALL UNLINED PORTIONS OF DITCHES, DIKES AND SWALES THAT WILL BE IN USE FOR MORE THEN 14 DAYS IN ACCORDANCE WITH SS-15 (EROSION SEEDING)

INSPECT DIKES, SWALES, AND DITCHES AFTER RAINFALL EVENTS. REMOVE DEBRIS AND SEDIMENT, AND REPAIR LININGS AND EMBANKMENTS AS NEEDED OR AS SPECIFIED BY THE ENGINEER.

REMOVAL ALL DIKES, SWALES AND LINED DITCHES FROM THE CLEAR ZONES EXPEDIENTLY UPON COMPLETION OF CONSTRUCTION ACTIVITIES.

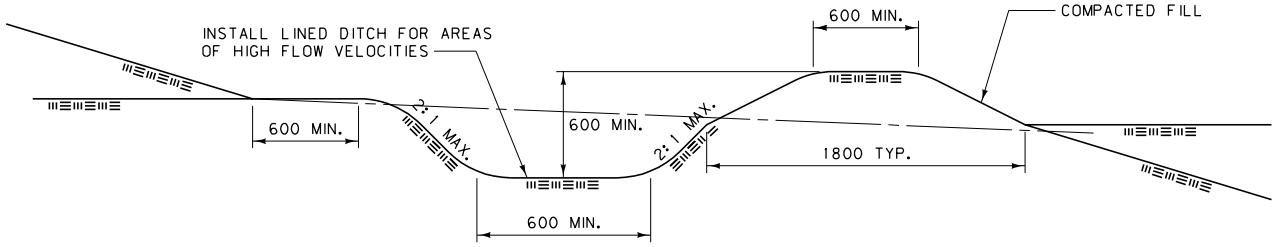

TYPICAL DRAINAGE SWALE

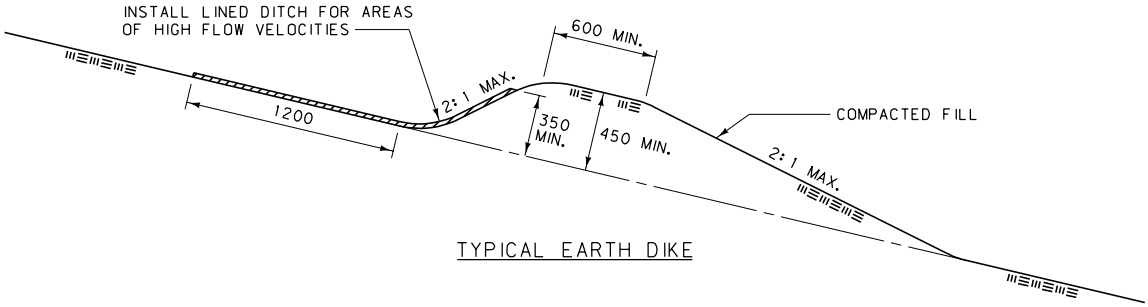

TYPICAL EARTH DIKE

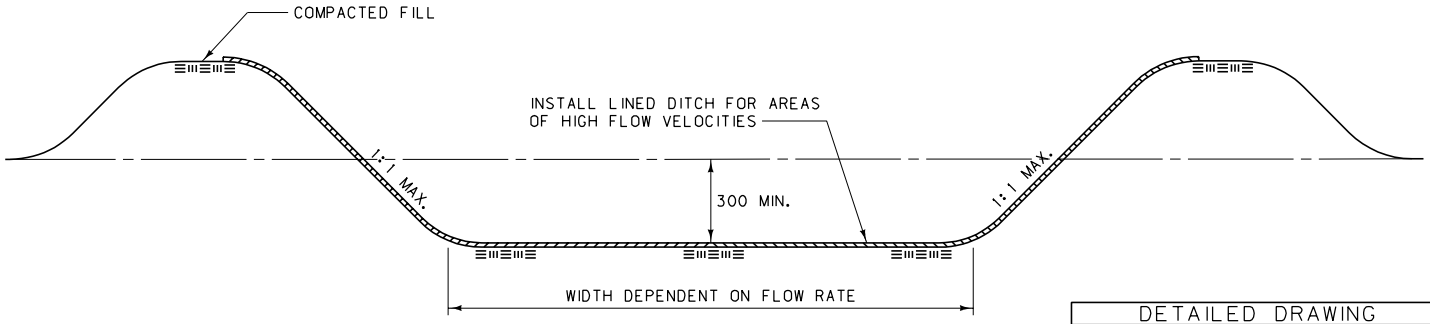

TYPICAL TRAPEZOIDAL DITCH

ALL DIMENSIONS ARE MILLIMETERS (mm) UNLESS OTHERWISE NOTED.

DETAILED DRAWING	
REFERENCE STANDARD SPEC. SECTION 208	DWG. NO. 208-16
EARTH DIKES/DRAINAGE SWALES & LINED DITCHES (SS-9)	
EFFECTIVE: FEBRUARY 2005	
serving you with pride	MONTANA DEPARTMENT OF TRANSPORTATION

SYMBOL: (OP)

OUTLET PROTECTION/VELOCITY DISSIPATION DEVICES SS-10:

OUTLET PROTECTION AND VELOCITY DISSIPATION DEVICES ARE PLACED AT PIPE OUTLETS TO PREVENT SCOUR AND REDUCE THE VELOCITY AND/OR ENERGY OF EXITING STORM WATER FLOWS. THESE DEVICES CAN BE USED AT THE OUTLETS OF PIPES, DRAINS, CULVERTS, SLOPE DRAINS, DIVERSION DITCHES, SWALES, CONDUITS OR CHANNELS AND SHOULD BE IMPLEMENTED ON A PROJECT-BY-PROJECT BASIS WITH OTHER BMPs WHEN DETERMINED NECESSARY BY THE ENGINEER.

FOLLOW GUIDELINES BELOW FOR SIZING OUTLET PROTECTION AND VELOCITY DISSIPATION DEVICES. FOLLOWING ENGINEER'S APPROVAL, OTHER MATERIALS MAY BE SUBSTITUTED FOR RIPRAP. GEOTEXTILE PLACEMENT MAY BE ELIMINATED FOLLOWING ENGINEERS APPROVAL. PLACE TYPE 1 OR TYPE 2 BANK PROTECTION AT PIPE OUTLET. FOR PIPE DIAMETERS LARGER THAN 600 mm AND/OR HIGH FLOWS, THE APPLICATION IS NOT CONSIDERED TEMPORARY AND A MONTANA REGISTERED ENGINEER'S DESIGN IS REQUIRED.

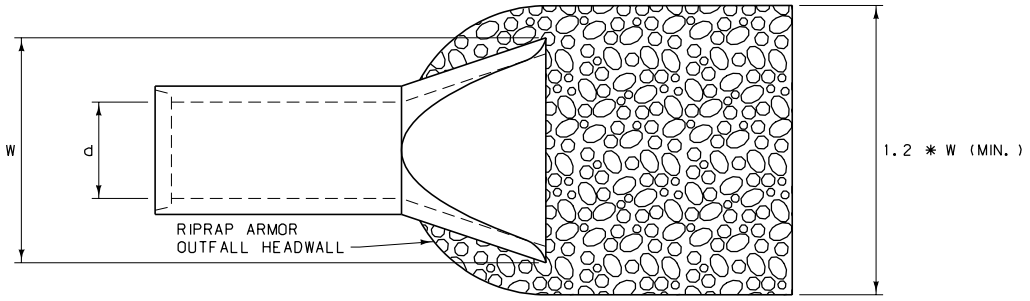

PLAN VIEW - CHANNELIZED FLOW
(OUTFALL TO CHANNEL OR DITCH)

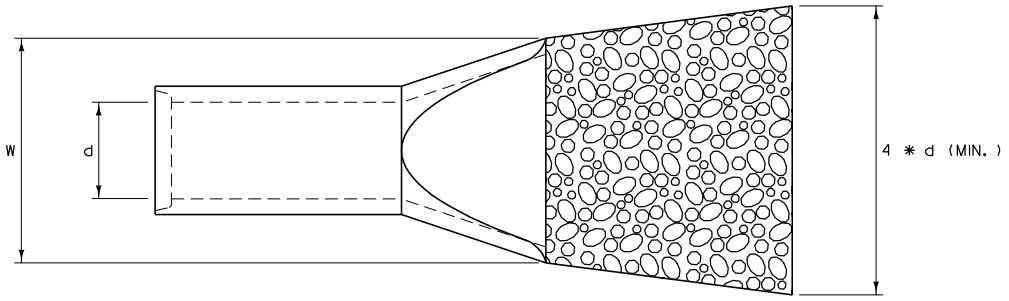

PLAN VIEW - UNCHANNELIZED FLOW
(OUTFALL TO UNCONFINED SURFACE-OVERLAND FLOW)

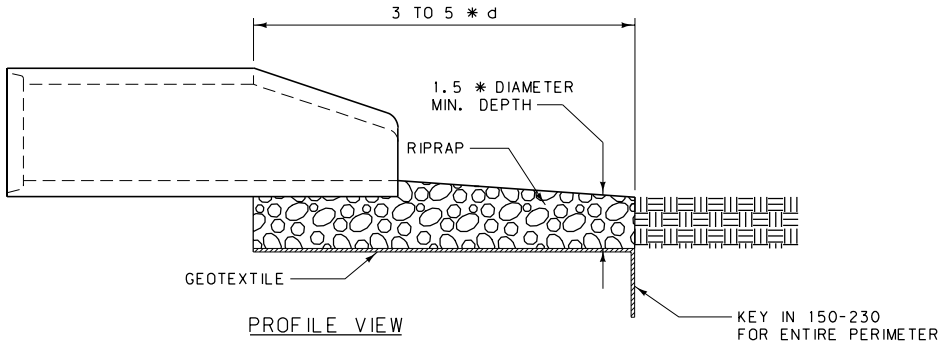

PROFILE VIEW

ALL DIMENSIONS ARE MILLIMETERS (mm) UNLESS OTHERWISE NOTED.

DETAILED DRAWING	
REFERENCE STANDARD SPEC. SECTION 208	DWG. NO. 208-18
OUTLET PROTECTION/VELOCITY DISSIPATION DEVICES (SS-10)	
EFFECTIVE: FEBRUARY 2005	
serving you with pride	MONTANA DEPARTMENT OF TRANSPORTATION

SYMBOL: ——— TSD ———

SLOPE DRAINS SS-11

A SLOPE DRAIN IS A PIPE OR LINED CHANNEL USED TO INTERCEPT AND CONVEY SURFACE RUNOFF OR GROUNDWATER INTO A STABILIZED WATERCOURSE, TRAPPING DEVICE, OR STABILIZED AREA. THIS DEVICE MAY BE USED AT CONSTRUCTION SITES WHERE SLOPES MAY BE ERODED BY SURFACE RUNOFF.

DO NOT EXCEED A DRAINAGE AREA OF 4 ha PER SLOPE DRAIN PIPE. FOR AREAS LARGER THAN 4 ha USE ROCK LINED CHANNELS. DO NOT PLACE SLOPE DRAINS ON SLOPES THAT EXCEED 2:1 SLOPES. INCORPORATE BMP SS-9 (EARTH DIKES/DRAINAGE SWALES & LINED DITCHES) TO AID IN FLOW DIVERSION.

INSTALL SLOPE DRAINS AS FOLLOWS:
- INSTALL DRAINS PERPENDICULAR TO SLOPE
- COMPACT SOIL AROUND INLET, OUTLET AND LENGTH OF STRUCTURE
- SECURELY ANCHOR SLOPE DRAINS INTO SOIL
- ENSURE CONNECTIONS ARE WATER TIGHT
- PROTECT INLET AND OUTLET WITH BMP SS-10 (OUTLET PROTECTION & VELOCITY DISSIPATION)

ALL MATERIALS REQUIRE ENGINEER'S APPROVAL PRIOR TO PLACEMENT.

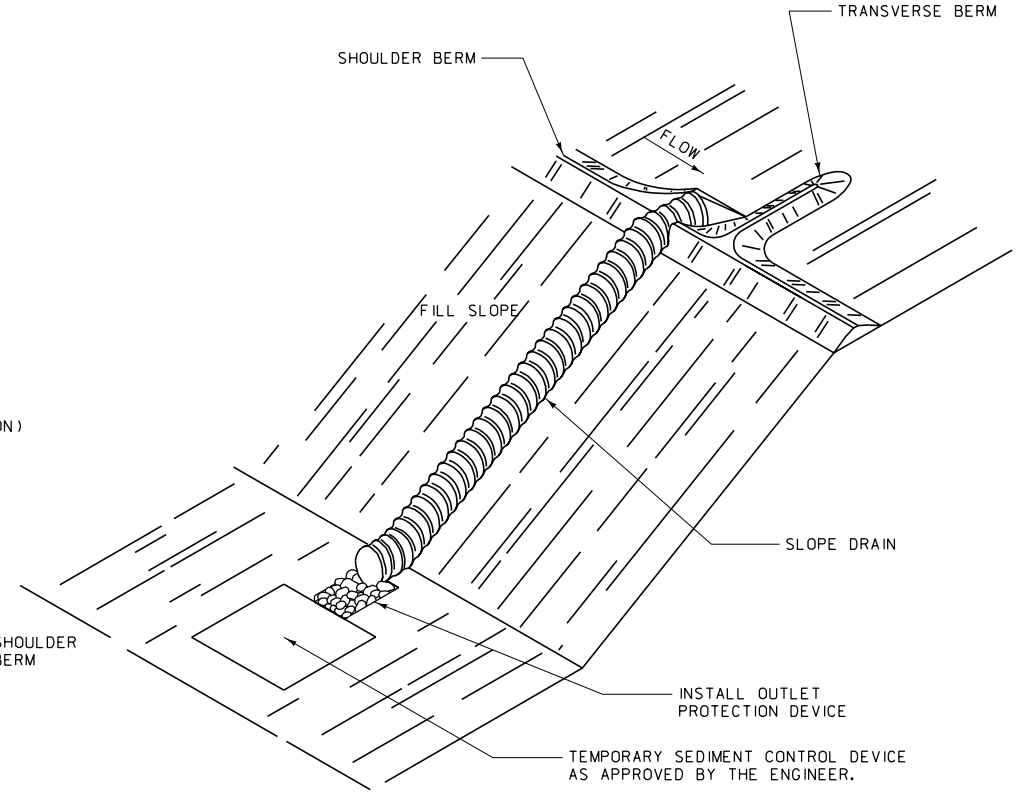

PIPE SLOPE DRAIN

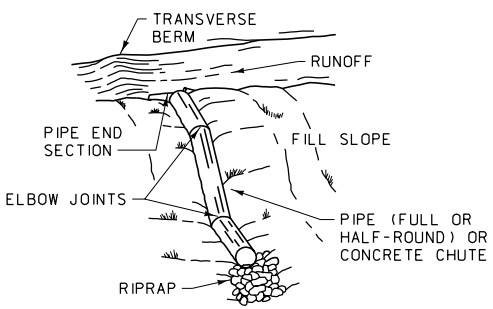

RIPRAP SLOPE DRAIN

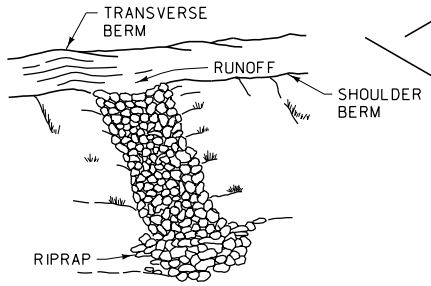

DITCH LINER: SYNTHETIC EROSION CONTROL AND REVEGETATION MAT

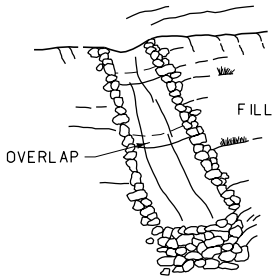

SLOPE DRAIN INLETS

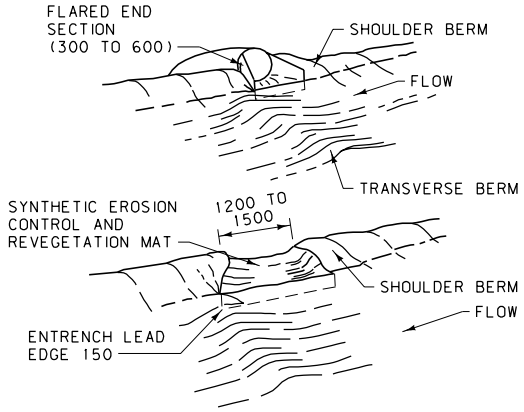

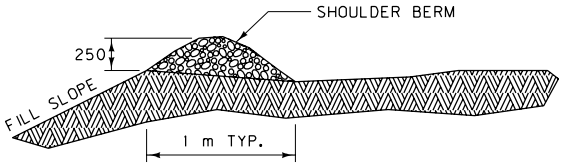

ALL DIMENSIONS ARE MILLIMETERS (mm) UNLESS OTHERWISE NOTED.

DETAILED DRAWING	
REFERENCE STANDARD SPEC. SECTION 208	DWG. NO. 208-20
SLOPE DRAINS (SS-11)	
EFFECTIVE: FEBRUARY 2005	

MDT serving you with pride — MONTANA DEPARTMENT OF TRANSPORTATION

SYMBOL: ———— SR ————

SLOPE ROUGHENING SS-12:

SLOPE ROUGHENING IS A VERY ROUGH SOIL SURFACE ON SLOPES RESULTING FROM CONSTRUCTION ACTIVITIES OR THE SYSTEMATIC ROUGHENING USING HEAVY EQUIPMENT TO CREATE RIDGES OR FURROWS PERPENDICULAR TO THE SLOPE. THE RIDGES OR FURROWS ARE TO BE EQUAL TO OR GREATER THAN 50 mm IN HEIGHT AND NO FURTHER THAN TWICE THE HEIGHT OF THE RIDGE OR FURROW APART. SLOPE ROUGHENING IS A GOOD FIRST LINE OF DEFENSE TO CONTROL EROSION AND SEDIMENT RUNOFF. DEGREE OF SLOPE ROUGHENING IS DEPENDENT ON THE GRADES AND PROXIMITY TO WATER RESOURCES.

ALL SLOPES STEEPER THAN 3:1 AND GREATER THAN 1500 VERTICAL MILLIMETERS REQUIRE SLOPE ROUGHENING, EXCLUDING ROCK SLOPES THAT CANNOT BE EXCAVATED BY RIPPING. ROUGHEN DISTURBED SLOPES OR LEAVE IN A ROUGHENED CONDITION. APPROPRIATE SUPPLEMENTS INCLUDE SOIL STABILIZATION BMPs SUCH AS TEMPORARY SEEDING OR EROSION SEEDING. WHEN FILL SLOPES ARE WITHIN 15 m OF SURFACE WATER, EARTH DIKES/DRAINAGE SWALES & LINED DITCHES (SS-9) AND/OR A SEDIMENT CONTROL BMP ARE REQUIRED.

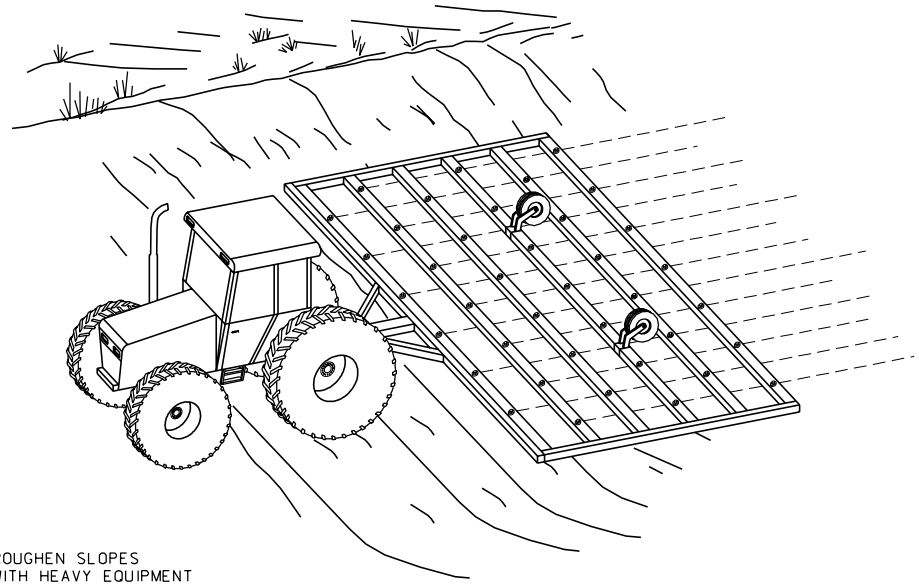

ROUGHEN SLOPES
WITH HEAVY EQUIPMENT
OR LEAVE IN ROUGHENED
CONDITION

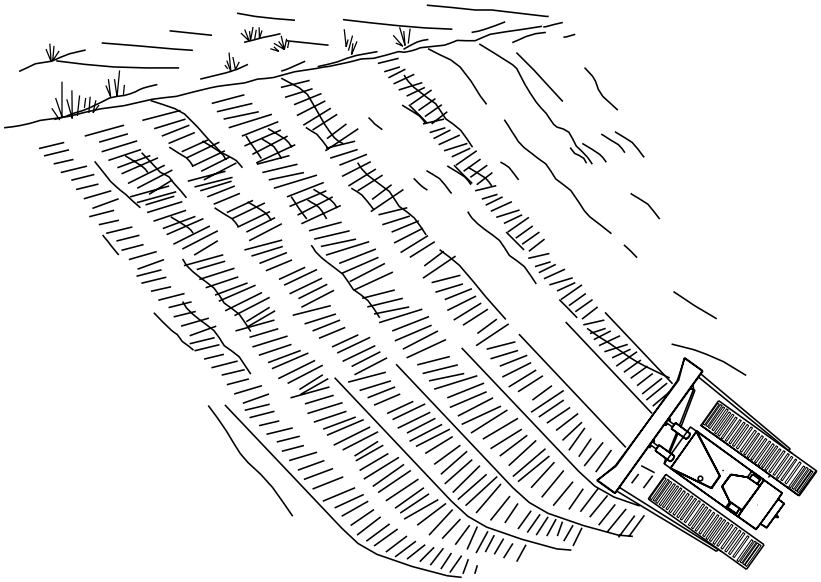

ALL DIMENSIONS ARE MILLIMETERS (mm) UNLESS OTHERWISE NOTED.

DETAILED DRAWING	
REFERENCE STANDARD SPEC. SECTION 208	DWG. NO. 208-22
SLOPE ROUGHENING (SS-12)	
EFFECTIVE: FEBRUARY 2005	
serving you with pride	MONTANA DEPARTMENT OF TRANSPORTATION

SYMBOL: ——— GT ———

TERRACED SLOPES SS-13:

TERRACED SLOPES ARE MADE OF EITHER EARTHEN EMBANKMENTS OR RIDGE AND CHANNEL SYSTEMS THAT ARE PROPORTIONALLY SPACED AND ARE CONSTRUCTED WITH AN ADEQUATE GRADE. TERRACES REDUCE DAMAGE FROM EROSION BY COLLECTING AND REDISTRIBUTING SURFACE RUNOFF TO STABLE OUTLETS AT SLOWER VELOCITIES AND BY INCREASING THE DISTANCE OF OVERLAND RUNOFF FLOW. THIS BMP IS USUALLY LIMITED TO USE ON LONG STEEP SLOPES WITH A WATER EROSION PROBLEM, OR WHERE IT IS ANTICIPATED THAT WATER EROSION WILL BE A PROBLEM. TERRACED SLOPES ARE NOT APPROPRIATE FOR USE ON SANDY, STONY, OR SHALLOW SOILS.

DESIGN TERRACED SLOPES WITH ADEQUATE AND APPROPRIATE OUTLETS. ENGINEER'S APPROVAL IS REQUIRED PRIOR TO MODIFICATIONS OF SPECIFIED TERRACED SLOPES.

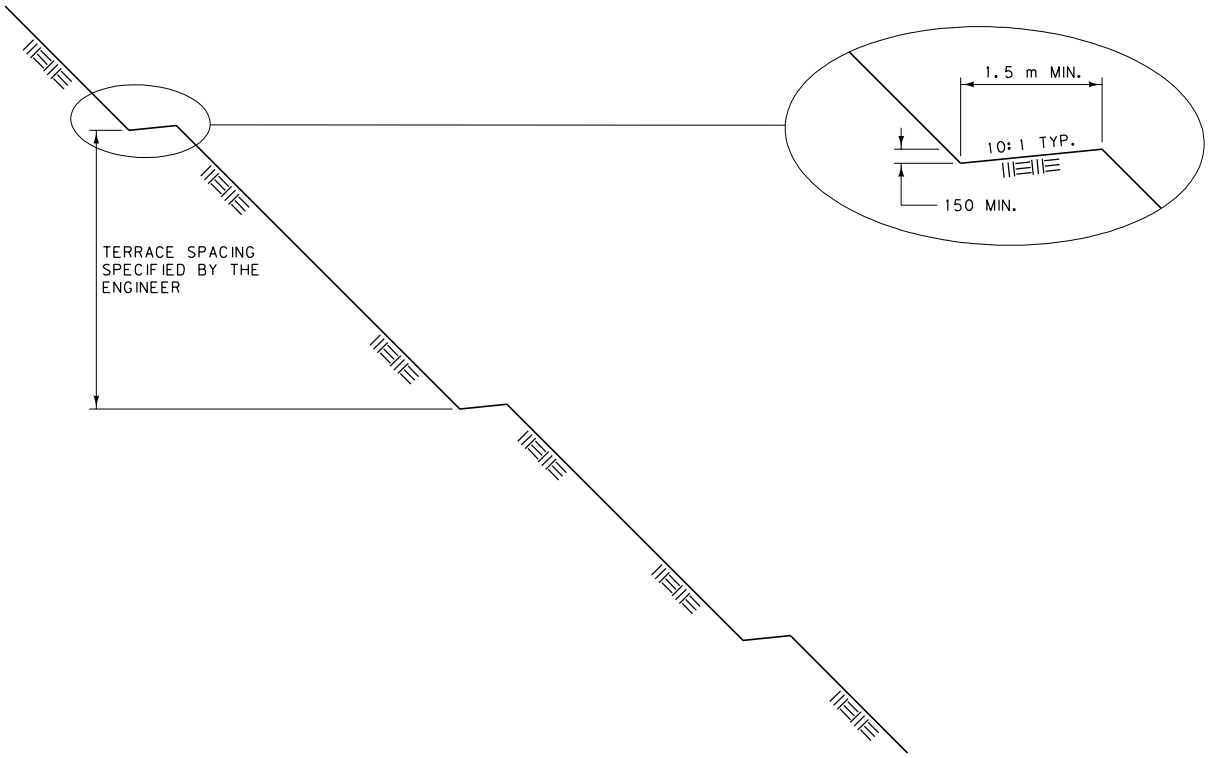

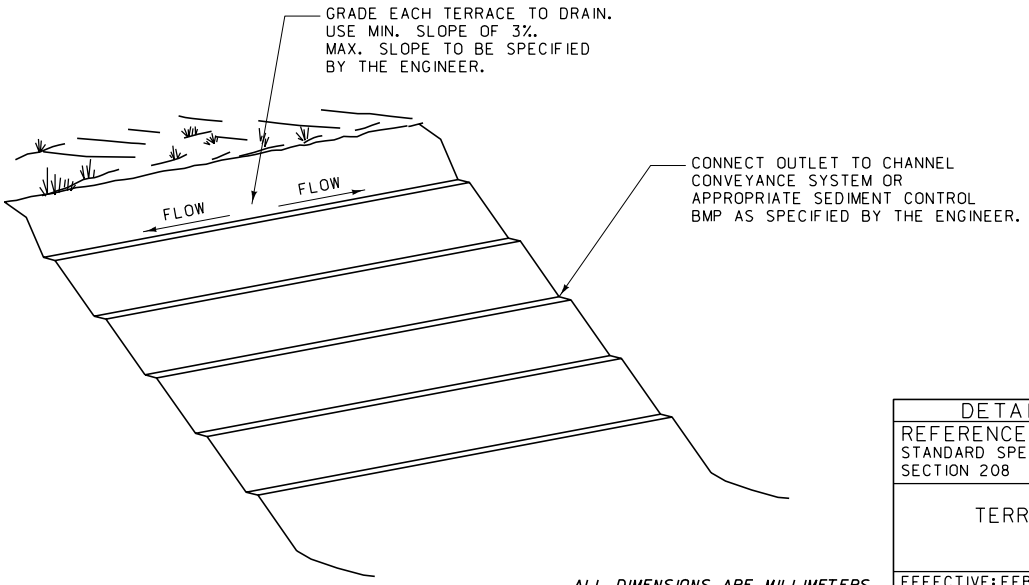

ALL DIMENSIONS ARE MILLIMETERS (mm) UNLESS OTHERWISE NOTED.

DETAILED DRAWING	
REFERENCE STANDARD SPEC. SECTION 208	DWG. NO. 208-24
TERRACED SLOPES (SS-13)	
EFFECTIVE: FEBRUARY 2005	
serving you with pride	MONTANA DEPARTMENT OF TRANSPORTATION

SYMBOL: ——— VBS ———

VEGETATED BUFFER SS-14:

VEGETATED BUFFER IS AN UNDISTURBED AREA OR STRIP OF ESTABLISHED VEGETATION. A VEGETATED BUFFER PROVIDES A LIVING SEDIMENT FILTER TO REDUCE RUNOFF VELOCITIES AND ALLOW CAPTURE AND SETTLING OF COARSE-GRAINED SEDIMENT. VEGETATED BUFFERS REDUCE OR PREVENT SEDIMENTATION FROM LEAVING THE RIGHT-OF-WAY.

IDENTIFY EXISTING VEGETATED BUFFERS BEFORE CONSTRUCTION OCCURS AND MARK AREA PER SS-2 (PRESERVATION OF EXISTING VEGETATION) OR WITH SC-1 (SILT FENCE). ESTABLISHED VEGETATED BUFFERS SHOULD INCLUDE GRASSES AND SHRUBS. IRRIGATION, FERTILIZATION AND WEED AND PEST CONTROL MAY BE REQUIRED IN ORDER TO ESTABLISH AND MAINTAIN AN EFFECTIVE VEGETATED BUFFER. KEEP EQUIPMENT AND FILL MATERIAL OFF OF VEGETATED BUFFERS. ALWAYS CONSIDER VEGETATED BUFFER BUFFERS WHEN WATER RESOURCES ARE ADJACENT TO OR NEAR DISTURBANCES AND REQUIRE PROTECTION. THE MINIMUM WIDTH REQUIREMENT FOR A WELL-ESTABLISHED VEGETATED BUFFER WITH A SLOPE OF 3:1 OR FLATTER IS 15 m. THE MINIMUM WIDTH REQUIREMENT FOR A WELL-ESTABLISHED VEGETATED BUFFER WITH A SLOPE STEEPER THAN 3:1 IS 30 m. WIDTH OF THE VEGETATED BUFFER MAY BE ADJUSTED ON A PROJECT-BY-PROJECT BASIS WITH APPROVAL BY THE ENGINEER. APPROPRIATE SUPPLEMENTS INCLUDE CHECK DAMS, SILT FENCES AND OTHER SEDIMENT CONTROL BARRIERS.

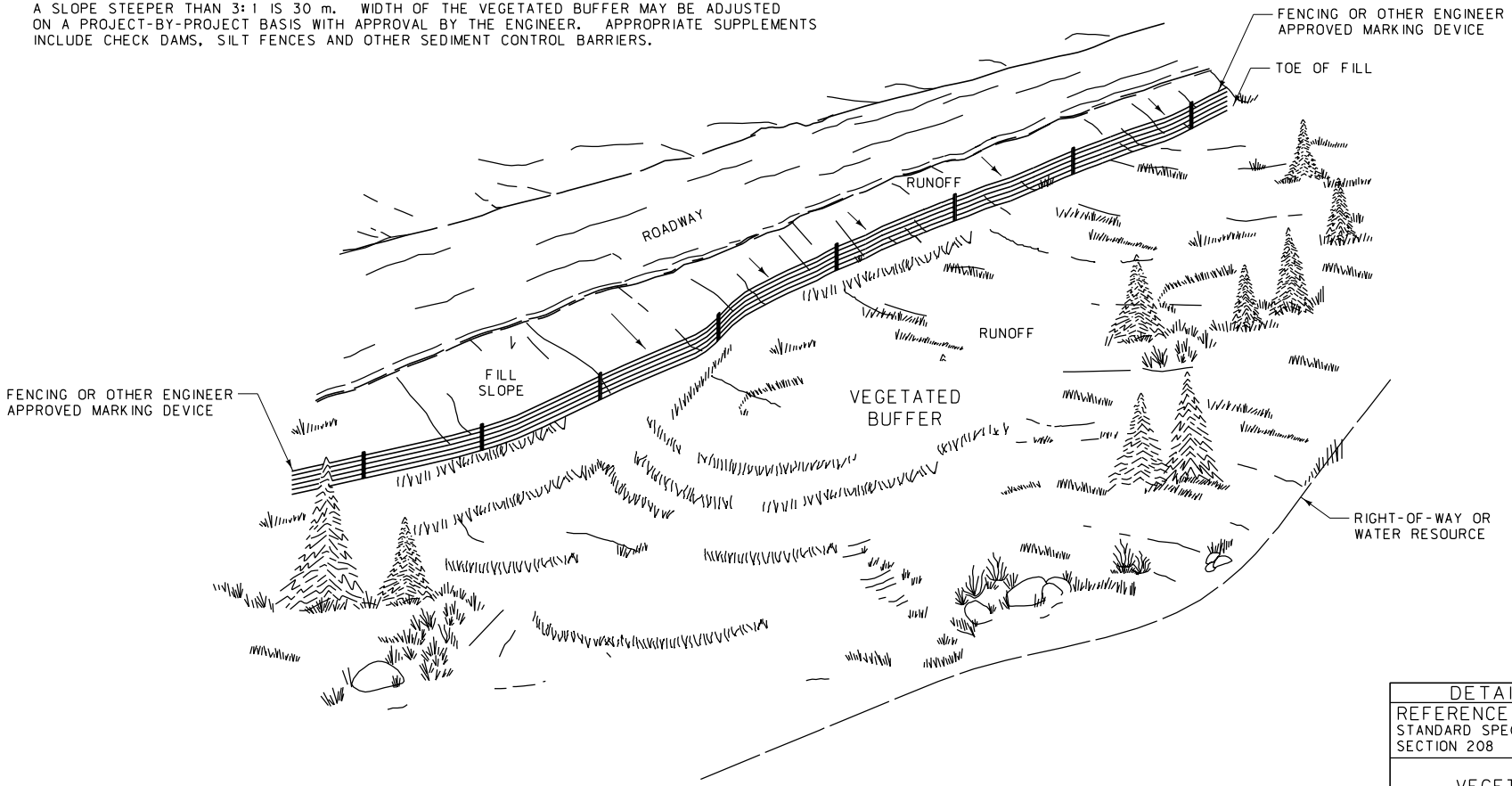

ALL DIMENSIONS ARE MILLIMETERS (mm) UNLESS OTHERWISE NOTED.

DETAILED DRAWING	
REFERENCE STANDARD SPEC. SECTION 208	DWG. NO. 208-26
VEGETATED BUFFER (SS-14)	
EFFECTIVE: FEBRUARY 2005	

MDT serving you with pride — MONTANA DEPARTMENT OF TRANSPORTATION

SYMBOL: ———— ES ————

EROSION SEEDING BMP SS-15:

EROSION SEEDING IS THE IMMEDIATE SEEDING OF FRESHLY EXPOSED SLOPES. USE EROSION SEEDING ON CUT AND FILL SLOPES STEEPER THAN 3:1 THAT ARE NOT SUBJECT TO FURTHER DISTURBANCE, EXCLUDE ROCK SLOPES THAT CANNOT BE EXCAVATED BY RIPPING. SEEDING DOES NOT REPLACE OR SUBSTITUTE FOR FINAL SEEDING ACTIVITIES SPECIFIED IN THE SEEDING SPECIAL PROVISION.

SEED COMPLETED SECTIONS DAILY, REGARDLESS OF THE TIME OF YEAR. ACCOMPLISH SEEDING BY MANUAL BROADCASTING WITH A SHOULDER-HARNESSED SPREADER SEEDER WITH NO MULCH OR FERTILIZER APPLIED. TRACK AREAS FOLLOWING SEEDING IN ACCORDANCE TO BMP SS-12, SLOPE ROUGHENING. HYDROSEEDING MAY ONLY BE USED AS APPROVED BY THE MDT AGRONOMIST, THROUGH THE ENGINEER. STORE THE RECOMMENDED SEED MIX ON-SITE PRIOR TO INITIATION OF SLOPE EXCAVATION. IF ONE OR MORE SPECIES IS UNAVAILABLE, CONTACT THE MDT AGRONOMIST, THROUGH THE ENGINEER, FOR THE SUBSTITUTE. ROCK AREAS THAT CANNOT BE RIPPED WILL BE EVALUATED ON A PROJECT-BY-PROJECT BASIS FOR THE NEED OF EROSION SEEDING. THESE AREAS WILL RECEIVE EROSION SEEDING FOLLOWING THE ENGINEER'S APPROVAL. THE SEED MIX AND RATE OF APPLICATION ARE AS FOLLOWS:

DISTRICT	SPECIES	kg/ha PLS
1 (MISSOULA)	CANADA WILDRYE	3.5
	SECAR BLUEBUNCH WHEATGRASS	5.5
	CRITANA THICKSPIKE WHEATGRASS	5.5
	COVAR SHEEP FESCUE	2.0
	CEREAL BARLEY	5.5
2, 3, 5 (BUTTE, GREAT FALLS, BILLINGS)	CANADA WILDRYE	3.5
	SECAR BLUEBUNCH WHEATGRASS	5.5
	SODAR STREAMBANK WHEATGRASS	5.5
	COVAR SHEEP FESCUE	2.0
	CEREAL BARLEY	5.5
4 (GLENDIVE)	CANADA WILDRYE	3.5
	SECAR BLUEBUNCH WHEATGRASS	5.5
	ROSANA WESTERN WHEATGRASS	5.5
	LODORM GREEN NEEDLEGRASS	3.5
	CEREAL BARLEY	5.5

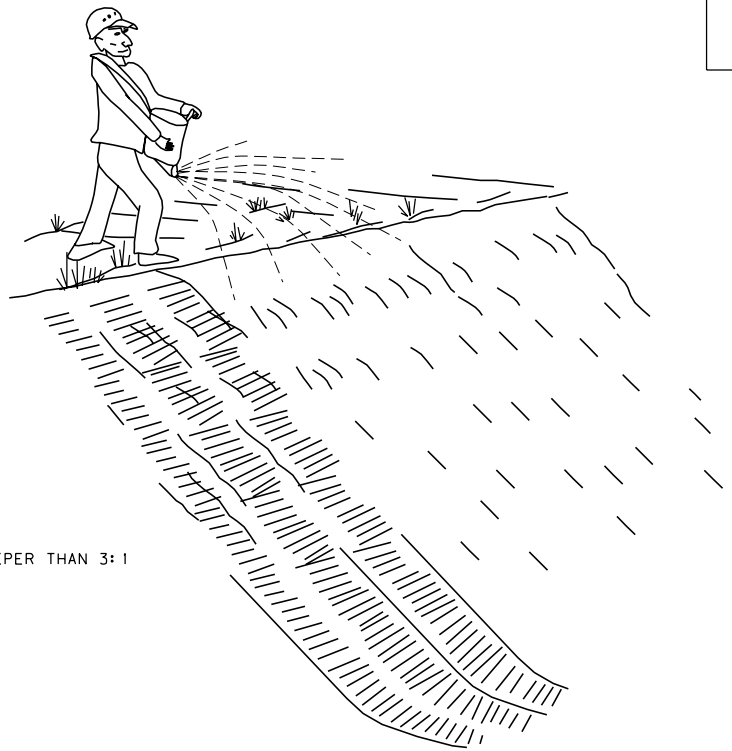

SLOPES STEEPER THAN 3:1

ALL DIMENSIONS ARE MILLIMETERS (mm) UNLESS OTHERWISE NOTED.

DETAILED DRAWING

REFERENCE STANDARD SPEC. SECTION 208

DWG. NO. 208-28

EROSION SEEDING (SS-15)

EFFECTIVE: FEBRUARY 2005

MDT serving you with pride

MONTANA DEPARTMENT OF TRANSPORTATION

SYMBOL: ——— SF ———

SILT FENCE SC-1:

SILT FENCE IS A SINGLE OR SERIES OF FILTER FABRIC SEDIMENT BARRIER STRETCHED AND ATTACHED TO SUPPORTING POSTS. THE FENCE BOTTOM IS ENTRENCHED.

SILT FENCES ARE USED FOR SHEET FLOWS TO ASSIST IN SEDIMENT CONTROL BY RETAINING SOME OF THE ERODED SOIL PARTICLES AND SLOWING THE RUNOFF VELOCITY TO ALLOW PARTICLE SETTLING. APPLICATIONS INCLUDE WATER RESOURCE PROTECTION, INLET PROTECTION, BANK PROTECTION, AND TOE OF SLOPE PROTECTION. INSTALL SILT FENCES PRIOR TO DISTURBING AREAS REQUIRING THIS BMP OR AS SLOPE GRADES ARE ACHIEVED. MAXIMUM CUT OR FILL SLOPE FOR A SILT FENCE IS 2:1. FOLLOW MDT STANDARD SPECIFICATION 622 FOR SILT FENCE MATERIALS AND INSTALLATION.

THERE ARE TWO TYPE OF SILT FENCE INSTALLATIONS:
- UNSTABILIZED - SILT FENCE SUPPORTED WITH EITHER WOOD OR METAL FENCE POSTS.
- STABILIZED - SILT FENCE SUPPORTED WITH METAL POSTS AND WITH WOVEN WIRE BACKING.

ENTRENCHMENT - THE INITIAL SILT FENCE INSTALLATION REQUIRES ONLY THE VERTICAL ENTRENCHMENT COMPONENT UNLESS THE ENGINEER DETERMINES BOTH VERTICAL AND HORIZONTAL ENTRENCHMENT COMPONENTS ARE NECESSARY. IF THE FENCE REQUIRES REPLACEMENT DUE TO FAILURE FROM PULLOUT OR UNDERCUTTING, THE SUBSEQUENT INSTALLATION WILL INCLUDE BOTH VERTICAL AND HORIZONTAL ENTRENCHMENT COMPONENTS.

SILT FENCES ARE USED BETWEEN THE EDGE OF CONSTRUCTION DISTURBANCE AND A WATER RESOURCE, AND AT A CRITICAL RESOURCE OR RIGHT-OF-WAY LINE THAT IS ADJACENT TO CONSTRUCTION ACTIVITY. POSITION THE BARRIER TO PREVENT SEDIMENT FROM ENTERING DRAINAGES. DO NOT PLACE THE BARRIER ACROSS LIVE STREAMS. WOVEN WIRE BACKING IS NECESSARY WHEN DEALING WITH HEAVIER FLOW VELOCITIES AND SEDIMENT OR AS A ROCK BARRIER. REMOVE SEDIMENT FROM BEHIND THE FENCE WHEN IT ACCUMULATES TO ONE-THIRD THE ORIGINAL HEIGHT. EITHER GRADE AND SEED OR REMOVE THE SEDIMENT DEPOSITS PRIOR TO REMOVAL OF THE FENCE. DISTANCES BETWEEN SILT FENCE WHEN USED FOR SEDIMENT RETENTION ARE AS FOLLOWS:
- FROM 2% TO 3% PLACE SILT FENCE AT 150 METER SPACING
- FROM 3% TO 4% PLACE SILT FENCE AT 90 METER SPACING
- FROM 4% + PLACE SILT FENCE AT 45 METER SPACING

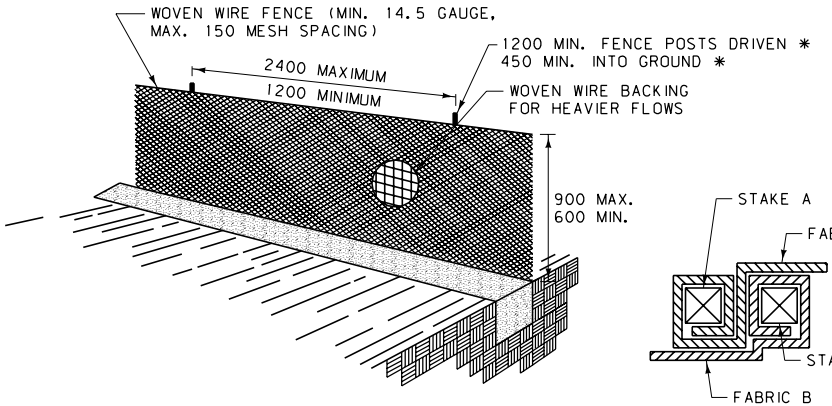

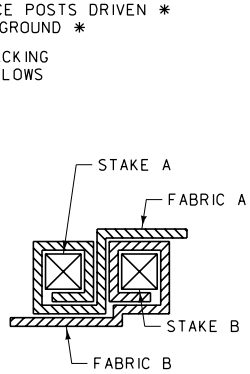

JOINING SECTION DETAIL

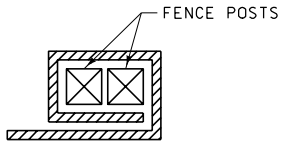

END STAKE DETAIL

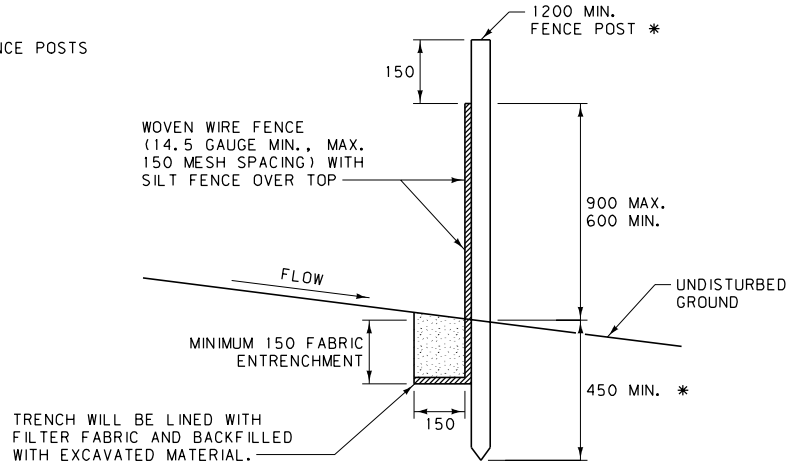

SILT FENCE - CROSS SECTION

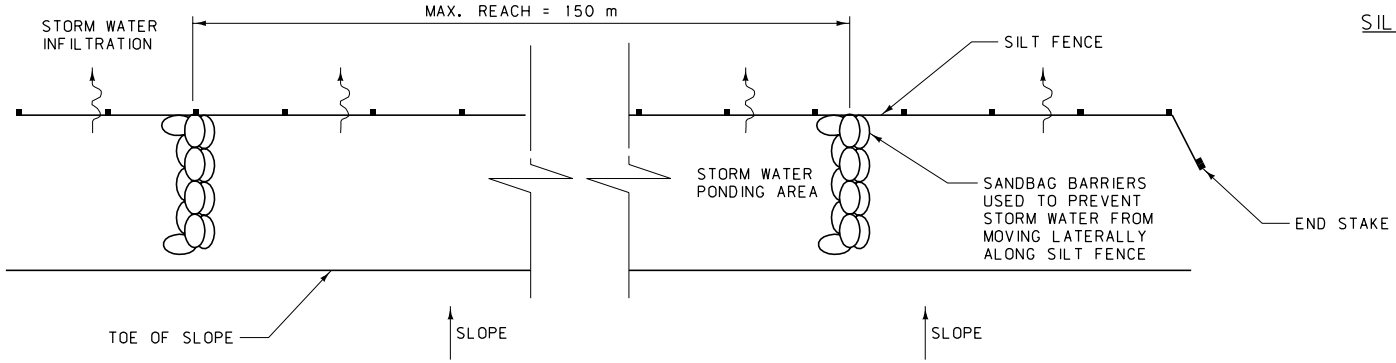

SILT FENCE - PLAN VIEW

* FOR CLEAR ZONE APPLICATIONS USE MAX. POST LENGTH OF 1500 mm WITH A MAX. BURIAL DEPTH OF 450 mm.

ALL DIMENSIONS ARE MILLIMETERS (mm) UNLESS OTHERWISE NOTED.

DETAILED DRAWING	
REFERENCE STANDARD SPEC. SECTION 208	DWG. NO. 208-30
SILT FENCE (SC-1)	
EFFECTIVE: FEBRUARY 2005	

MDT serving you with pride — MONTANA DEPARTMENT OF TRANSPORTATION

SYMBOL: ——— DB ———

DESILTING BASIN SC-2:

A DESILTING BASIN IS A TEMPORARY BASIN FORMED BY EXCAVATION AND/OR CONSTRUCTING AN EMBANKMENT SO THAT SEDIMENT-LADEN RUNOFF IS TEMPORARILY DETAINED UNDER SLOW FLOWING CONDITIONS, ALLOWING SEDIMENT TO SETTLE OUT BEFORE THE RUNOFF IS DISCHARGED.

USE DESILTING BASINS FOR DISTURBED AREAS BETWEEN 2 ha AND 4 ha WHERE SEDIMENT-LADEN WATER MAY ENTER THE DRAINAGE SYSTEM OR WATERCOURSE.

DO NOT USE DESILTING BASINS FOR DRAINAGE AREAS GREATER THEN 30 ha AND DO NOT LOCATE BASINS WITHIN LIVE STREAMS.

SIZE DESILTING BASINS SUCH THAT THERE IS 100 m^3 PER 1 ha OF CONTRIBUTING AREA, LENGTH MUST BE EQUAL OR LARGER THAN TWICE THE WIDTH, DEPTH MUST BE BETWEEN 1 m AND 1.5 m. ANY BASIN MEETING THE DEFINITION OF A "HIGH HAZARD DAM" MUST BE DESIGNED BY A PROFESSIONAL CIVIL ENGINEER REGISTERED IN THE STATE OF MONTANA. BASINS LARGER THAN 1000 m^3 MUST ALSO BE DESIGNED BY A PROFESSIONAL CIVIL ENGINEER REGISTERED IN THE STATE OF MONTANA.

PLACE ROCK, VEGETATION, GEOTEXTILE OR BLANKETS TO PROTECT THE BASIN INLET AND SLOPES AGAINST EROSION. SURROUND DESILTING BASINS WITH CHAIN LINK FENCE WHEN DESIGNED IN RESIDENTIAL/COMMERCIAL AREAS OR AS DIRECTED BY THE ENGINEER.

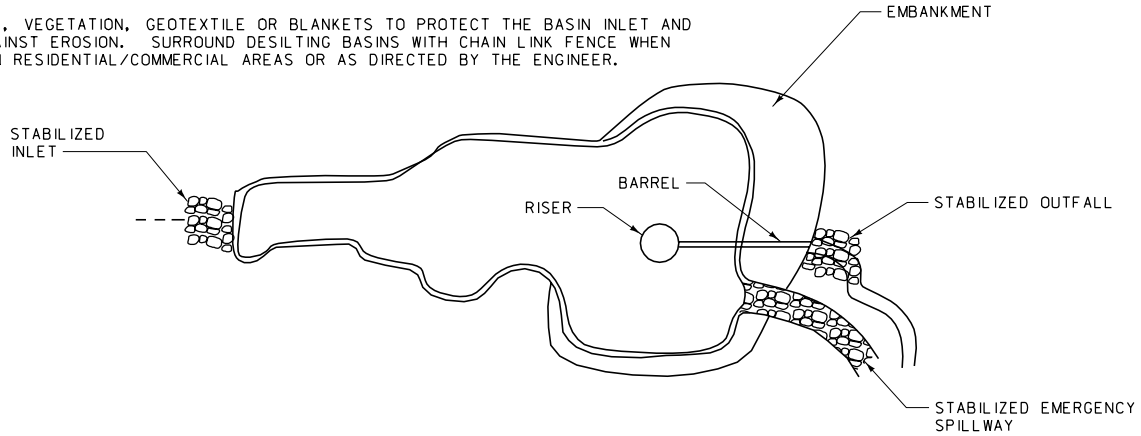

TYPICAL DESILTING BASIN - TOP VIEW

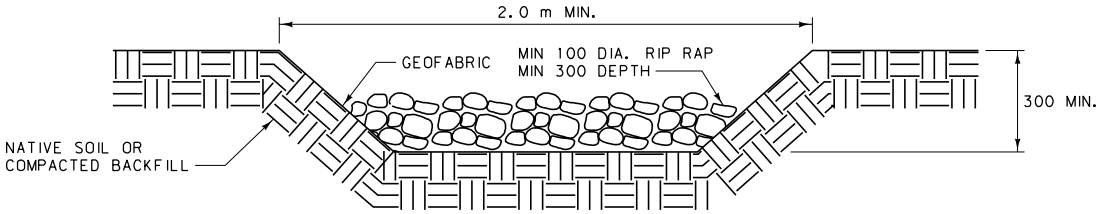

TYPICAL DESILTING BASIN - EMERGENCY SPILLWAY CROSS SECTION

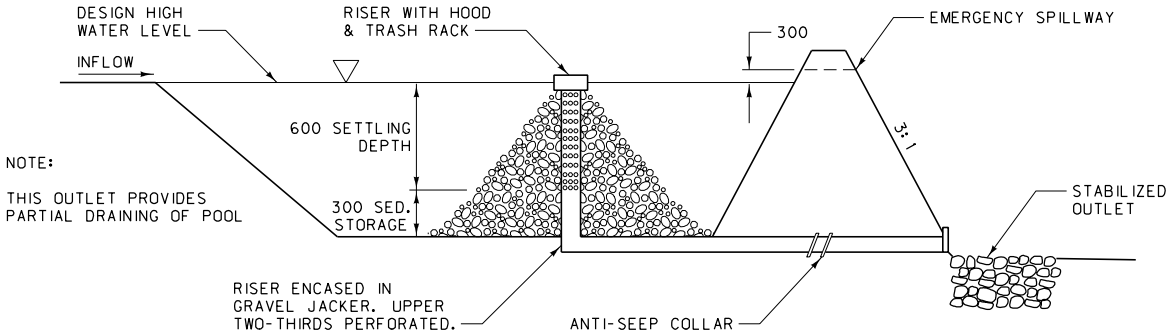

TYPICAL DESILTING BASIN - OUTLET #1

ALL DIMENSIONS ARE MILLIMETERS (mm) UNLESS OTHERWISE NOTED.

DETAILED DRAWING	
REFERENCE STANDARD SPEC. SECTION 208	DWG. NO. 208-32A
DESILTING BASIN (SC-2) (SHEET 1)	
EFFECTIVE: FEBRUARY 2005	
serving you with pride	MONTANA DEPARTMENT OF TRANSPORTATION

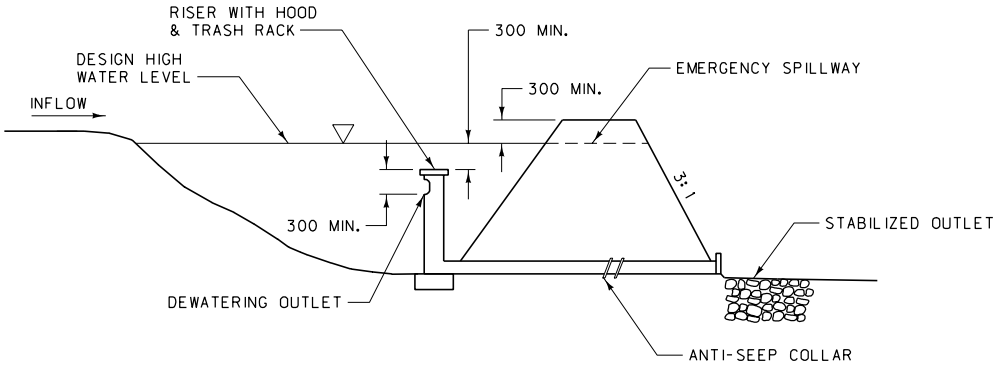

NOTE:

THIS OUTLET PROVIDES NO
DRAINING OF PERMANANT POOL

TYPICAL DESILTING BASIN - OUTLET #2

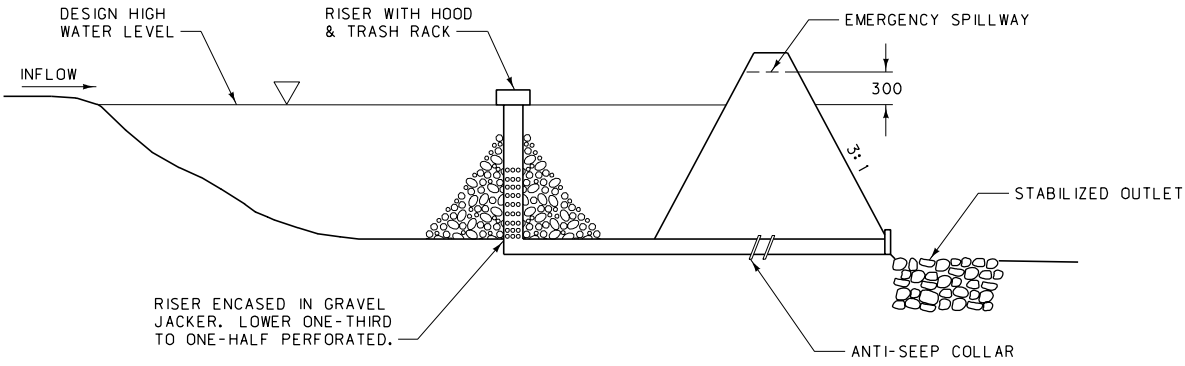

NOTE:

THIS OUTLET PROVIDES
COMPLETE DRAINING OF POOL

TYPICAL DESILTING BASIN - OUTLET #3

ALL DIMENSIONS ARE MILLIMETERS
(mm) UNLESS OTHERWISE NOTED.

DETAILED DRAWING	
REFERENCE STANDARD SPEC. SECTION 208	DWG. NO. 208-32B
DESILTING BASIN (SC-2) (SHEET 2)	
EFFECTIVE: FEBRUARY 2005	
serving you with pride	MONTANA DEPARTMENT OF TRANSPORTATION

SYMBOL: ———— ST ————

SEDIMENT TRAP SC-3:

A SEDIMENT TRAP IS A TEMPORARY BASIN WITH A CONTROLLED RELEASE STRUCTURE, FORMED BY EXCAVATING OR CONSTRUCTION OF AN EARTHEN EMBANKMENT ACROSS A WATERWAY OR LOW DRAINAGE AREA.

USE SEDIMENT TRAPS WHEN DISTURBED AREAS ARE LESS THAN 2 ha. THIS BMP CAN BE USED TO PROVIDE ADDITIONAL PROTECTION FOR A WATER BODY OR FOR REDUCING SEDIMENT BEFORE IT ENTERS A DRAINAGE SYSTEM.

SEDIMENT BASINS ARE NOT APPROPRIATE FOR DRAINAGE AREAS LARGER THAN 2 ha AND ONLY REMOVE LARGE TO MEDIUM SIZED PARTICLES. DO NOT USE SEDIMENT TRAPS IN LIVE STREAMS.

A MINIMUM SETTLING ZONE OF 130 m^3 PER ha AND A MINIMUM SEDIMENT ZONE OF 65 m^3 PER ha IS REQUIRED FOR EACH SEDIMENT TRAP. ANY TRAP MEETING THE DEFINITION OF A "HIGH HAZARD DAM" MUST BE DESIGNED BY A PROFESSIONAL CIVIL ENGINEER LICENSED IN THE STATE OF MONTANA. ALL TRAPS LARGER THAN 1000 m^3 REQUIRE A DESIGN BY A PROFESSIONAL ENGINEER LICENSED IN THE STATE OF MONTANA.

PLACE ROCK, VEGETATION, GEOTEXTILE OR BLANKETS TO PROTECT THE TRAP'S INLET, OUTLET AND SLOPES AGAINST EROSION. ENCLOSE THE SEDIMENT TRAP WITH CHAN LINK FENCE WHEN PLACED IN RESIDENTIAL/COMMERCIAL AREAS OR AS DIRECTED BY THE ENGINEER.

REFER TO BMP SC-2 FOR RISER PIPE CONFIGURATIONS AND OVERFLOW SPILLWAY DESIGNS.

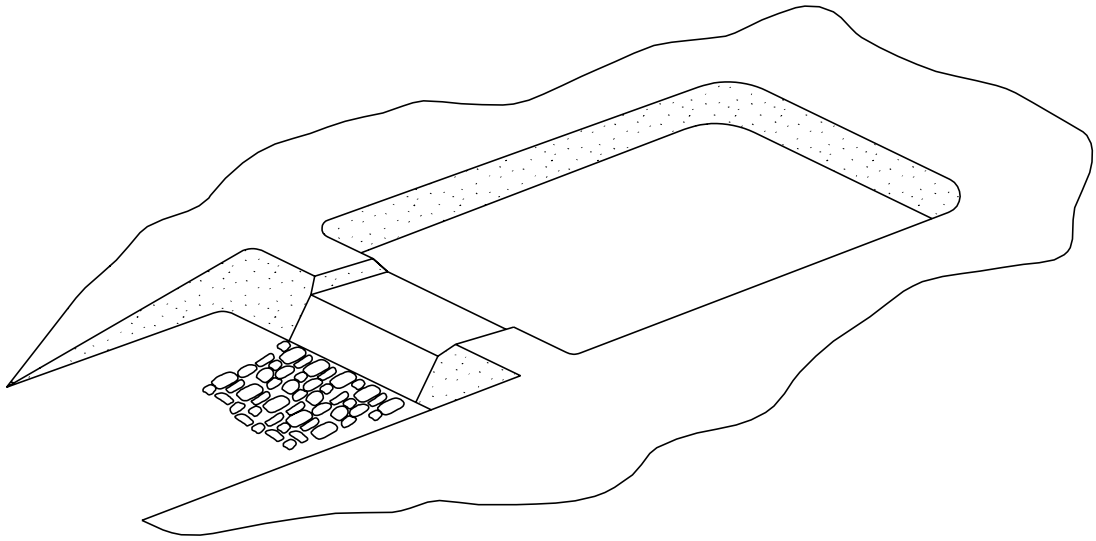

TYPICAL SEDIMENT TRAP WITH SPILLWAY TYPE OUTFALL

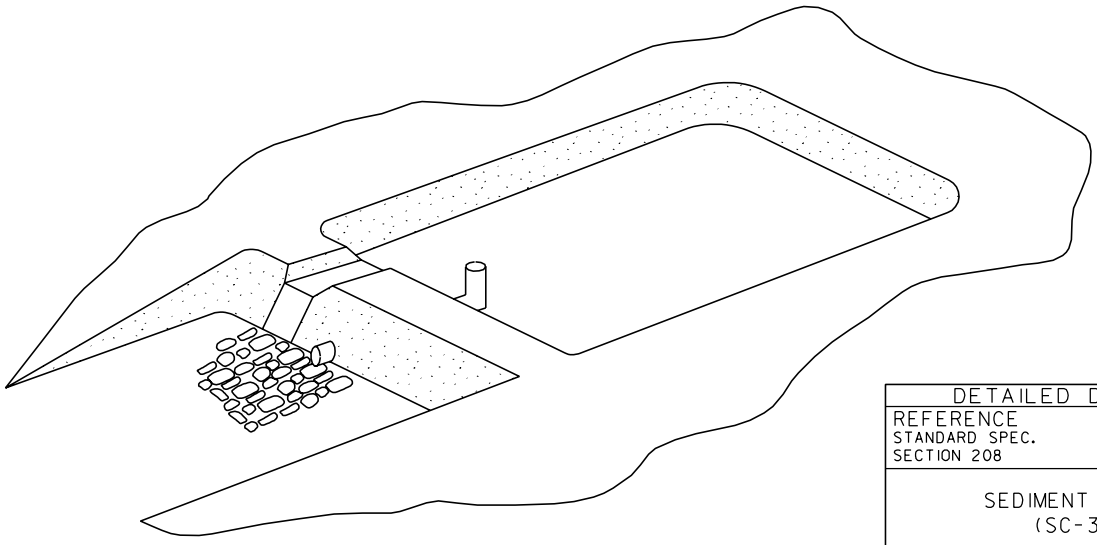

TYPICAL SEDIMENT TRAP WITH RISER PIPE TYPE OUTFALL

ALL DIMENSIONS ARE MILLIMETERS (mm) UNLESS OTHERWISE NOTED.

DETAILED DRAWING	
REFERENCE STANDARD SPEC. SECTION 208	DWG. NO. 208-34
SEDIMENT TRAP (SC-3)	
EFFECTIVE: FEBRUARY 2005	
serving you with pride	MONTANA DEPARTMENT OF TRANSPORTATION

SYMBOL: ———— CD ————

CHECK DAMS SC-4:

A CHECK DAM IS A SMALL DEVICE CONSTRUCTED OF GRAVEL, SANDBAGS, OR FIBER ROLLS, PLACED ACROSS A NATURAL OR MAN-MADE CHANNEL OR DRAINAGE DITCH. CHECK DAMS REDUCE SCOUR AND CHANNEL EROSION BY REDUCING FLOW VELOCITIES AND ENCOURAGING SEDIMENT DROPOUT.

CHECK DAMS MAY BE INSTALLED IN SMALL CHANNELS WITH DRAINAGE AREAS OF 4 ha OR LESS AND/OR STEEP CHANNELS WHERE STORM WATER RUNOFF VELOCITIES EXCEED 1.5 m/s. THE MAXIMUM HEIGHT FOR CHECK DAMS WITHIN THE CLEAR ZONE IS 150 mm.

CHECK DAMS CANNOT BE USED IN LIVE STREAMS OR FOR DRAINAGE AREAS LARGER THAN 4 ha. IN ADDITION, CHECK DAMS CANNOT BE CONSTRUCTED FROM SILT FENCE.

PLACE CHECK DAMS AT A DISTANCE THAT WILL ALLOW SMALL POOLS TO BE FORMED BEHIND EACH DAM. INSTALL THE FIST CHECK DAM APPROXIMATELY 5 METERS FROM THE OUTFALL DEVICE. PLACE MULTIPLE CHECK DAMS SUCH THAT BACKWATER FROM THE DOWNSTREAM DAM WILL REACH THE TOE OF THE UPSTREAM DAM. ROCK MAY BE PLACED BY HAND OR BY MECHANICAL METHOD TO ACHIEVE COMPLETE DITCH OR SWALE COVERAGE.

CHECK DAMS CONSTRUCTED FROM GRAVEL MUST BE 100% PASSING THE 50 mm SCREEN AND 10% MAXIMUM PASSING THE 4.75 mm SIEVE. DAM MATERIAL MAY BE PITRUN OR CRUSHED AGGREGATE. REFER TO BMPs SC-5 AND SC-8 FOR USE OF FIBER ROLLS AND SAND BAGS AS CHECK DAMS.

REMOVE SEDIMENT FROM BEHIND THE DAM WHEN IT ACCUMULATES TO ONE-HALF THE ORIGINAL HEIGHT UNLESS ITS DRAINAGE AREA HAS BEEN STABILIZED.

DISTANCES BETWEEN CHECK DAMS ARE AS FOLLOWS:
- FROM 1% TO 3% PLACE CHECK DAMS AT 90 METER SPACING
- FROM 3% TO 4% PLACE CHECK DAMS AT 60 METER SPACING
- FROM 4% + PLACE CHECK DAMS AT 30 METER SPACING

CHECK DAM SPACING MAY BE ADJUSTED ON A PROJECT-BY-PROJECT BASIS BY THE ENGINEER.
DO NOT USE CHECK DAMS ON 1-2% GRADES UNLESS DETERMINED NECESSARY BY THE ENGINEER.

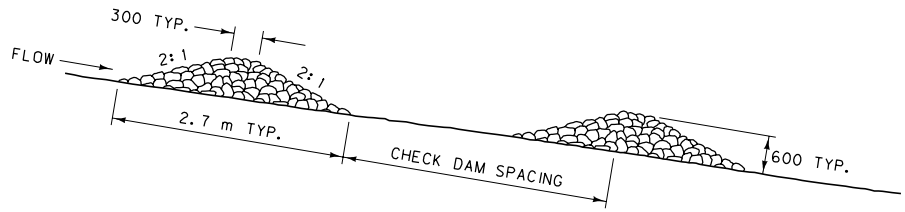

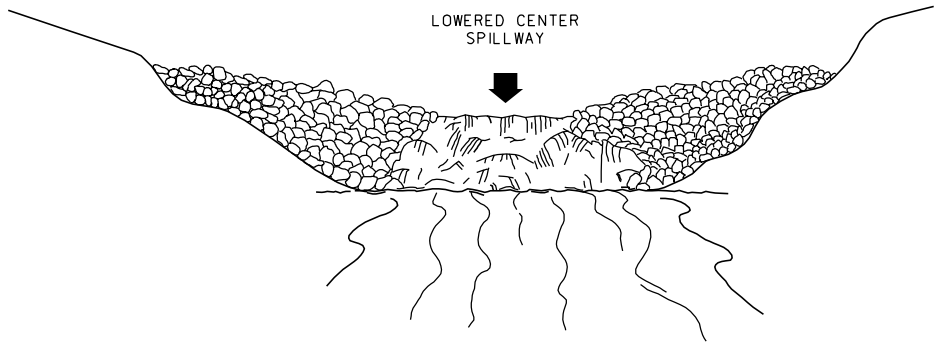

ALL DIMENSIONS ARE MILLIMETERS (mm) UNLESS OTHERWISE NOTED.

DETAILED DRAWING	
REFERENCE STANDARD SPEC. SECTION 208	DWG. NO. 208-36
CHECK DAMS (SC-4)	
EFFECTIVE: FEBRUARY 2005	

MDT serving you with pride — MONTANA DEPARTMENT OF TRANSPORTATION

SYMBOL: ———— FR ————

FIBER ROLLS SC-5:

A FIBER ROLL CONSISTS OF EROSION CONTROL BLANKET MATERIAL THAT IS PREFABRICATED, OR ROLLED AND BOUND IN THE FIELD INTO A TIGHT TUBULAR ROLL AND PLACED ON THE FACE OF SLOPES AT REGULAR INTERVALS TO INTERCEPT RUNOFF, REDUCE ITS FLOW VELOCITY, RELEASE THE RUNOFF AS SHEET FLOW, AND PROVIDE SOME REMOVAL OF SEDIMENT FROM THE RUNOFF.

FIBER ROLLS MAY BE USED ALONG THE TOP, FACE, AND AT GRADE BREAKS OF EXPOSED AND ERODIBLE SLOPES TO SHORTEN SLOPE LENGTH AND SPREAD RUNOFF AS SHEET FLOW. ROLLS MAY BE USED AS CHECK DAMS IF APPROVED BY THE ENGINEER. FOR USE AS CHECK DAMS, PLACE FIBER ROLLS AT 15 m MAXIMUM SPACING OR AS APPROVED BY THE ENGINEER.

ALTHOUGH FIBER ROLLS PROVIDE SOME SEDIMENT REMOVAL, FIBER ROLLS ARE NOT TO BE USED IN PLACE OF A LINEAR SEDIMENT BARRIER (I.E., SILT FENCE, SANDBAG BARRIER, OR STRAW BALE BARRIER).

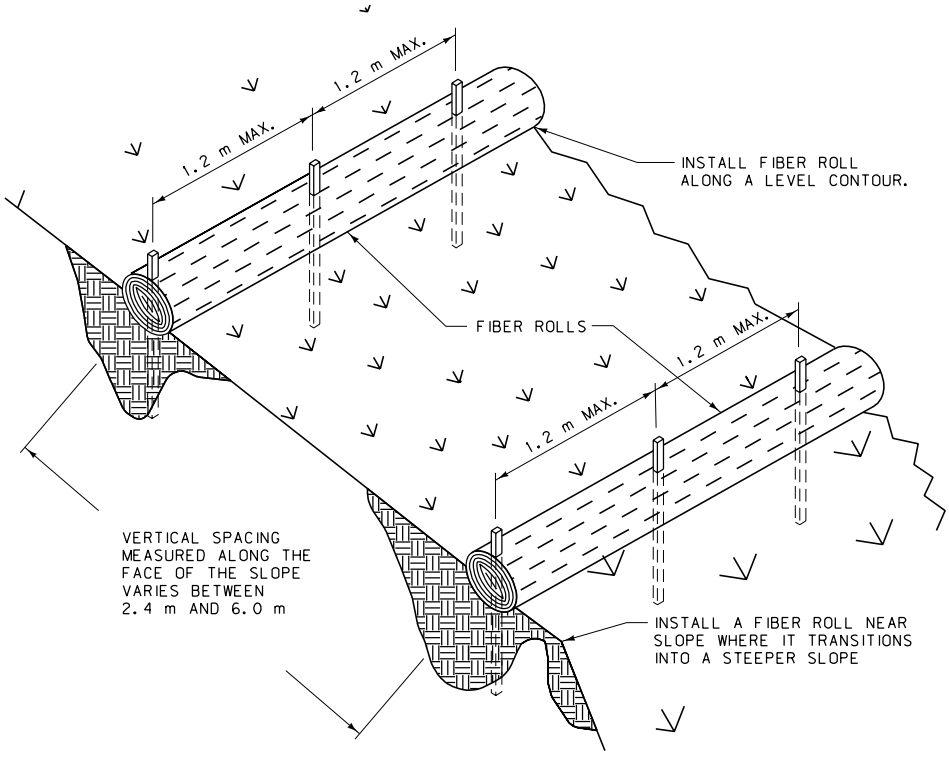

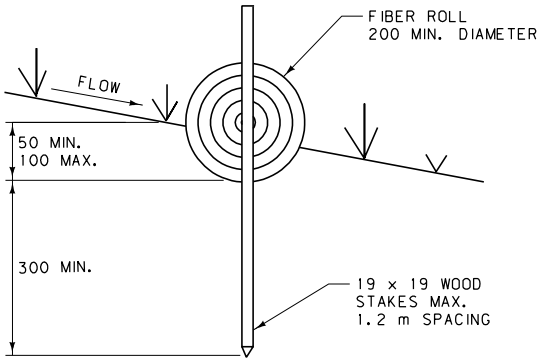

ALL DIMENSIONS ARE MILLIMETERS (mm) UNLESS OTHERWISE NOTED.

DETAILED DRAWING	
REFERENCE STANDARD SPEC. SECTION 208	DWG. NO. 208-38
FIBER ROLLS (SC-5)	
EFFECTIVE: FEBRUARY 2005	

MDT serving you with pride — MONTANA DEPARTMENT OF TRANSPORTATION

SYMBOL: ———— GBB ————

GRAVEL BAG BERM SC-6:

A GRAVEL BAG BERM CONSISTS OF A SINGLE ROW OF GRAVEL BAGS THAT ARE INSTALLED END-TO-END TO FORM A BARRIER ACROSS A SLOPE TO INTERCEPT RUNOFF, REDUCE RUNOFF VELOCITY, RELEASE RUNOFF AS SHEET FLOW, AND PROVIDE SOME SEDIMENT REMOVAL. GRAVEL BAG BERMS CAN BE USED ALONG THE FACE AND AT GRADE BREAKS OF EXPOSED AND ERODIBLE SLOPES TO SHORTEN SLOPE LENGTHS AND SPREAD RUNOFF AS SHEET FLOW.

THESE DEVICES ARE NOT TO BE USED IN PLACE OF A LINEAR SEDIMENT BARRIER (I.E., SILT FENCE, SANDBAG BARRIERS, OR STRAW BALE BARRIERS).

USE WOVEN POLYPROPYLENE, POLYETHYLENE, OR POLYAMIDE FABRIC OR BURLAP MATERIAL FOR BAGS. BAG MATERIAL IS REQUIRED TO HAVE A MINIMUM UNIT WEIGHT OF 135 g/m², MULLEN BURST STRENGTH EXCEEDING 2 070 kPa AND AN ULTRAVIOLET STABILIZATION EXCEEDING 70%.

USE GRAVEL BAGS HAVING A LENGTH OF 450 mm, WIDTH OF 300 mm, THICKNESS OF 75 mm, AND A MASS OF APPROXIMATELY 15 kg. ALTERNATIVE BAG SIZES REQUIRE ENGINEERS APPROVAL PRIOR TO USE.

FILL GRAVEL BAGS APPROXIMATELY 75% FULL WITH GRAVEL CONSISTING OF 100% PASSING THE 19 mm SCREEN AND 10% MAXIMUM PASSING THE 4.75 mm SIEVE. FILL MATERIAL MAY BE PITRUN OR CRUSHED AGGREGATE. FILL MATERIAL IS SUBJECT TO APPROVAL BY THE ENGINEER.

TIGHTLY PLACE GRAVEL BAGS TO MINIMIZE GAPS BETWEEN BAGS. BAGS MAY BE STAGGERED ON A PROJECT-BY PROJECT BASIS AS APPROVED BY THE ENGINEER.

PLACE GRAVEL BAG BERMS AT 2.4 TO 6 m SPACING ALONG THE SLOPE. FOR ABNORMALLY STEEP OR SHALLOW SLOPES FOLLOW ENGINEERS GUIDELINES.

ALL BAGS PLACED WITHIN THE CLEAR ZONE REQUIRE MEASURES TO PROTECT GRAVEL FROM FREEZING. ALL FREEZE REDUCTION METHODS REQUIRE ENGINEERS APPROVAL PRIOR TO IMPLEMENTATION.

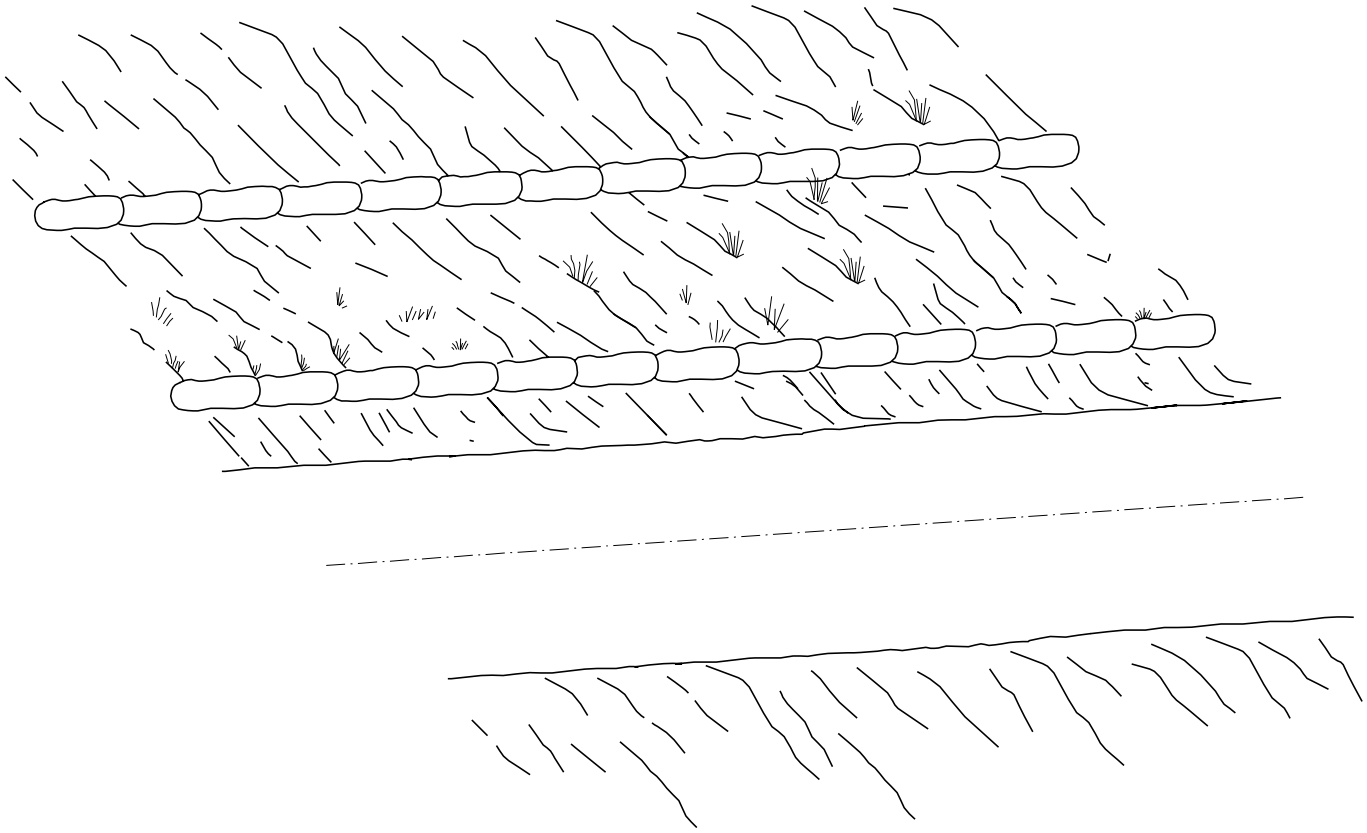

ALL DIMENSIONS ARE MILLIMETERS (mm) UNLESS OTHERWISE NOTED.

DETAILED DRAWING	
REFERENCE STANDARD SPEC. SECTION 208	DWG. NO. 208-40
GRAVEL BAG BERM (SC-6)	
EFFECTIVE: FEBRUARY 2005	
serving you with pride	MONTANA DEPARTMENT OF TRANSPORTATION

SYMBOL: ——— SAND-B ———

SAND BAG BARRIERS SC-8:

A SANDBAG BARRIER IS A TEMPORARY LINEAR SEDIMENTATION BARRIER CONSISTING OF STACKED SANDBAGS, DESIGNED TO INTERCEPT AND SLOW THE FLOW OF SEDIMENT-LADEN SHEET FLOW RUNOFF. SANDBAGS CAN ALSO BE USED WHERE FLOWS ARE MODERATELY CONCENTRATED, SUCH AS DITCHES, SWALES, AND STORM DRAIN INLETS TO DIVERT AND/OR DETAIN FLOWS.

LIMIT THE USE OF SANDBAG BARRIERS TO DRAINAGE AREAS OF 2 ha OR SMALLER. DUE TO THE BAG MATERIAL, SANDBAG BARRIERS HAVE A TENDENCY TO FAIL OVER LONG-TERM PROJECTS.

USE WOVEN POLYPROPYLENE, POLYETHYLENE, OR POLYAMIDE FABRIC OR BURLAP MATERIAL FOR BAGS. BAG MATERIAL IS REQUIRED TO HAVE A MINIMUM UNIT WEIGHT OF 135 g/m², A MULLEN BURST STRENGTH EXCEEDING 2 070 kPa AND AN ULTRAVIOLET STABILIZATION EXCEEDING 70%.

USE SANDBAGS HAVING A LENGTH OF 450 mm, WIDTH OF 300 mm, THICKNESS OF 75 mm, AND A MASS OF APPROXIMATELY 15 kg. ALTERNATIVE BAG SIZES MAY REQUIRE ENGINEER'S APPROVAL PRIOR TO USE.

FILL SANDBAGS WITH SAND CONSISTING OF 100% PASSING THE 4.75 mm SCREEN, 50% PASSING THE 2.00 mm SIEVE, AND 20% MAXIMUM PASSING THE 0.075 mm SIEVE. FILL MATERIAL IS SUBJECT TO APPROVAL BY THE ENGINEER.

WHEN INSTALLING SANDBAG BARRIERS AS LINEAR CONTROL, PLACE BAGS ALONG A LEVEL CONTOUR. UPON ENDING THE SANDBAG RUN, PLACE THE LAST BAGS TO ANGLE UP THE SLOPE SO THAT FLOWS DO NOT ESCAPE AROUND THE END.

WHEN SANDBAG BARRIERS ARE PLACED IN CONCENTRATED FLOWS, STACK SANDBAGS TO HEIGHT USING A PYRAMID APPROACH WITH THE UPPER SANDBAGS OVERLAPPING THE LOWER ROW. THIS APPLICATION MAY NOT BE USED WITHIN THE CLEAR ZONE UNLESS OVERALL HEIGHT IS 150 mm OR LESS.

ALL BAGS PLACED WITHIN THE CLEAR ZONE REQUIRE MEASURES TO PROTECT SAND FROM FREEZING. ALL FREEZE REDUCTION METHODS REQUIRE ENGINEERS APPROVAL PRIOR TO IMPLEMENTATION.

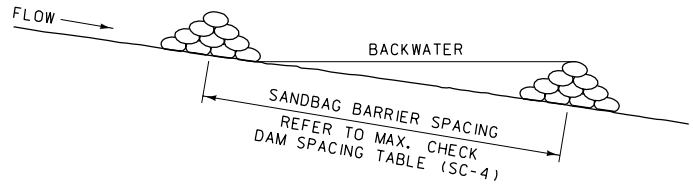

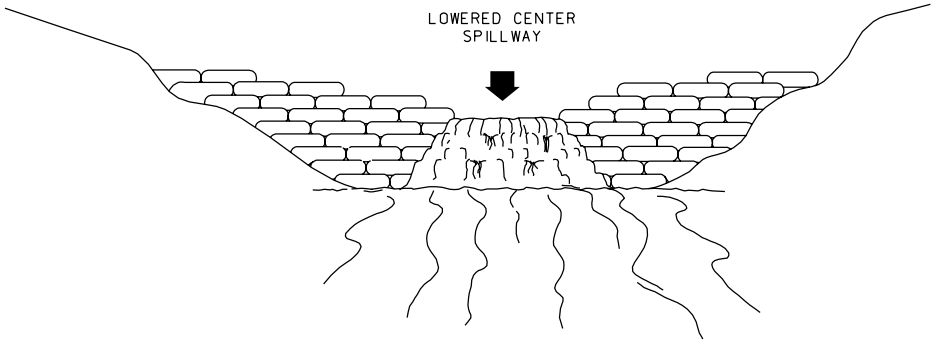

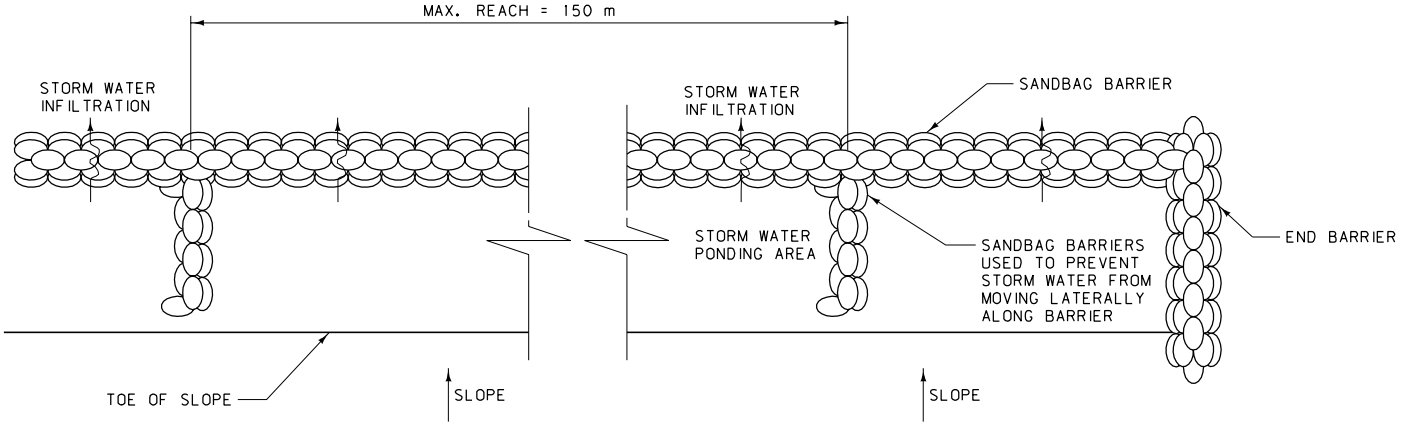

ALL DIMENSIONS ARE MILLIMETERS (mm) UNLESS OTHERWISE NOTED.

DETAILED DRAWING	
REFERENCE STANDARD SPEC. SECTION 208	DWG. NO. 208-42
SAND BAG BARRIERS (SC-8)	
EFFECTIVE: FEBRUARY 2005	

MDT serving you with pride — MONTANA DEPARTMENT OF TRANSPORTATION

SYMBOL: ——— STRAW-B ———

STRAW BALE BARRIERS SC-9:

STRAW BALE BARRIERS ARE A SEDIMENT BARRIER CONSISTING OF ENTRENCHED, OVERLAPPING AND ANCHORED STRAW BALES THAT REDUCE RUNOFF VELOCITIES AND RETAIN SEDIMENT. DO NOT USE STRAW BALE BARRIERS INSIDE THE CLEAR ZONE. STRAW BALES MUST BE CERTIFIED WEED-FREE.

STRAW BALE BARRIERS ARE USED FOR SHEET OR CONCENTRATED FLOWS TO REDUCE RUNOFF VELOCITY, PROMOTE SEDIMENT RETENTION AND ALLOW SETTLING. DO NOT USE STRAW BALES IN HIGH FLOWS SUCH AS CHANNELS OR LIVE STREAMS. IN ADDITION, STRAW BALES CAN NOT BE USED ON SURFACE WHICH DO NOT ALLOW FOR ENTRENCHMENT.

MINIMUM STRAW BALES SIZE REQUIREMENTS ARE A WIDTH OF 360 mm, HEIGHT OF 450 mm, LENGTH OF 900 mm AND A MASS OF 23 kg. USE STEEL WIRE (1.57 mm MIN. DIAMETER), NYLON OR POLYPROPYLENE STRING (2 mm MIN. DIAMETER) TO BIND BALES. MINIMUM BREAKING STRENGTH OF BINDING MATERIAL IS 360 N. USE 50 mm BY 50 mm (NOMINAL) BY 900 mm LONG WOODEN STAKES. DO NOT USE METAL STAKES.

INSTALL STRAW BALES ALONG A LEVEL CONTOUR, WITH THE LAST BALE TURNED UP SLOPE. PLACE BALES IN A 100 mm DEEP TRENCH, TIGHTLY ABUT ADJACENT BALES, AND STAKE USING A MINIMUM OF TWO STAKES PER BALE. IF SLOPES EXCEED 10:1 THE LENGTH OF SLOPE UP STREAM OF THE BARRIER MUST BE LESS THAN 15 m. OFFSET BALES AT LEAST 1 m FROM THE TOE OF SLOPES. IF SITE CONDITIONS DO NOT ALLOW FOR OFFSET, BALES MAY BE PLACED AT TOE.

FOLLOW GUIDELINES IN BMP SC-4 IF BALES ARE USED AS CHECK DAMS.

REPAIR OR REPLACE DAMAGED, UNDER-CUT OR END RUN BALES. REMOVE SEDIMENT BUILDUP FROM BALES ONCE IT REACHES A HEIGHT OF 1/3 THE BALE HEIGHT.

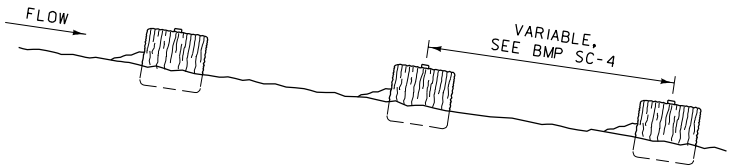

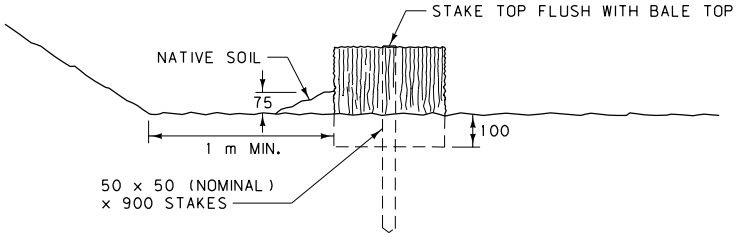

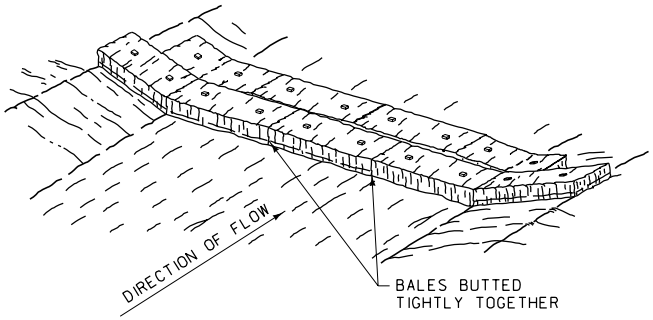

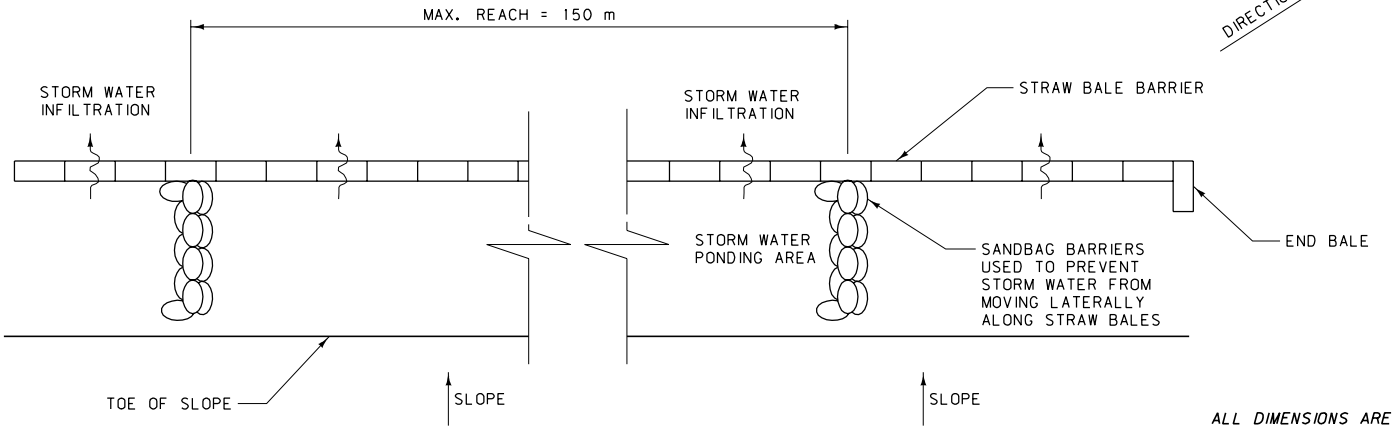

ALL DIMENSIONS ARE MILLIMETERS (mm) UNLESS OTHERWISE NOTED.

DETAILED DRAWING	
REFERENCE STANDARD SPEC. SECTION 208	DWG. NO. 208-44
STRAW BALE BARRIERS (SC-9)	
EFFECTIVE: FEBRUARY 2005	

MDT serving you with pride — MONTANA DEPARTMENT OF TRANSPORTATION

SYMBOL: (SDP)

STORM DRAIN INLET PROTECTION SC-10:

STORM DRAIN INLET PROTECTION IS USED AT STORM DRAIN INLETS THAT ARE SUBJECT TO RUNOFF FROM CONSTRUCTION ACTIVITIES. THESE DEVICES DRAIN AND/OR FILTER SEDIMENT-LADEN RUNOFF AND ALLOW SEDIMENT TO SETTLE PRIOR TO DISCHARGE OF STORM WATER INTO STORM WATER DRAINAGE SYSTEMS OR WATERCOURSES.

USE STORM DRAIN INLET PROTECTION WHEN PONDING WILL NOT ENCROACH INTO HIGHWAY AND FOR DRAINAGE AREAS OF 0.4 ha OR LESS. FOR FLOWS LESS THEN 0.014 m^3/s SILT FENCE OR STRAW BALES MAY BE USED. WHEN FLOWS EXCEED 0.014 m^3/s USE SANDBAG BARRIERS OR GRAVEL CHECK DAMS. FOLLOW SILT FENCE (SC-1), STRAW BALE BARRIERS (SC-9), SANDBAG BARRIERS (SC-8) AND CHECK DAMS (SC-4) FOR INSTALLATION REQUIREMENTS FOR EACH TYPE OF MATERIAL.

STRAW BALES, SAND BAGS, AND GRAVEL BERMS MAY BE USED WITHIN THE CLEAR ZONE UPON ENGINEERS APPROVAL. EXPEDIENTLY REMOVE ALL STRAW BALES, SAND BAGS, AND GRAVEL BERMS FROM THE CLEAR ZONE UPON COMPLETION OF CONSTRUCTION ACTIVITIES.

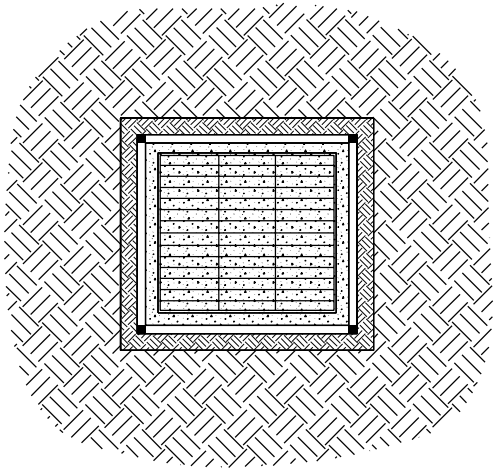

SILT FENCE - PLAN VIEW

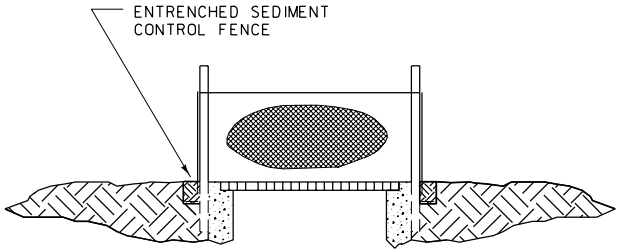

SILT FENCE - PROFILE VIEW

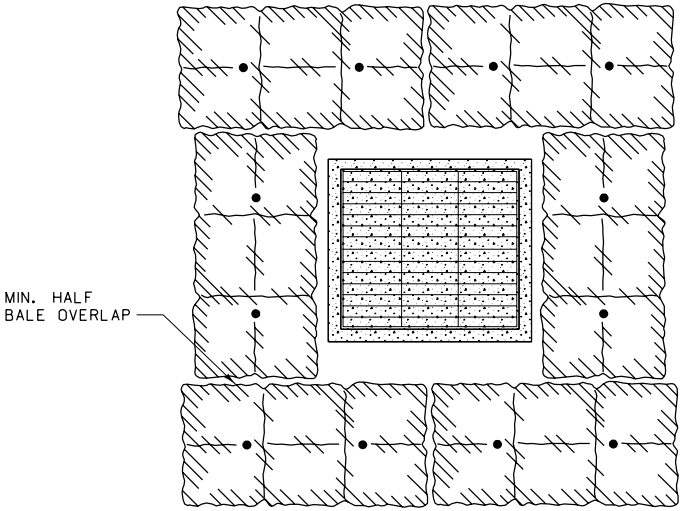

STRAW BALE BARRIER - PLAN VIEW

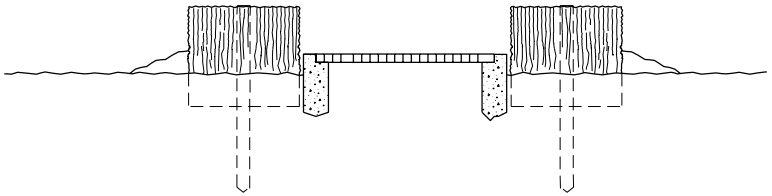

STRAW BALE BARRIER - PROFILE VIEW

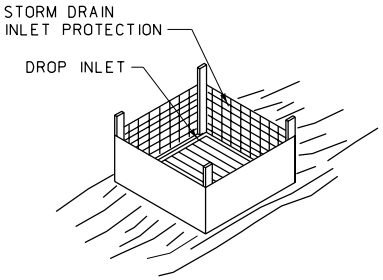

EXAMPLE ISOMETRIC VIEW

ALL DIMENSIONS ARE MILLIMETERS (mm) UNLESS OTHERWISE NOTED.

DETAILED DRAWING	
REFERENCE STANDARD SPEC. SECTION 208	DWG. NO. 208-46A
STORM DRAIN INLET PROTECTION (SC-10) (SHEET 1)	
EFFECTIVE: FEBRUARY 2005	
serving you with pride	MONTANA DEPARTMENT OF TRANSPORTATION

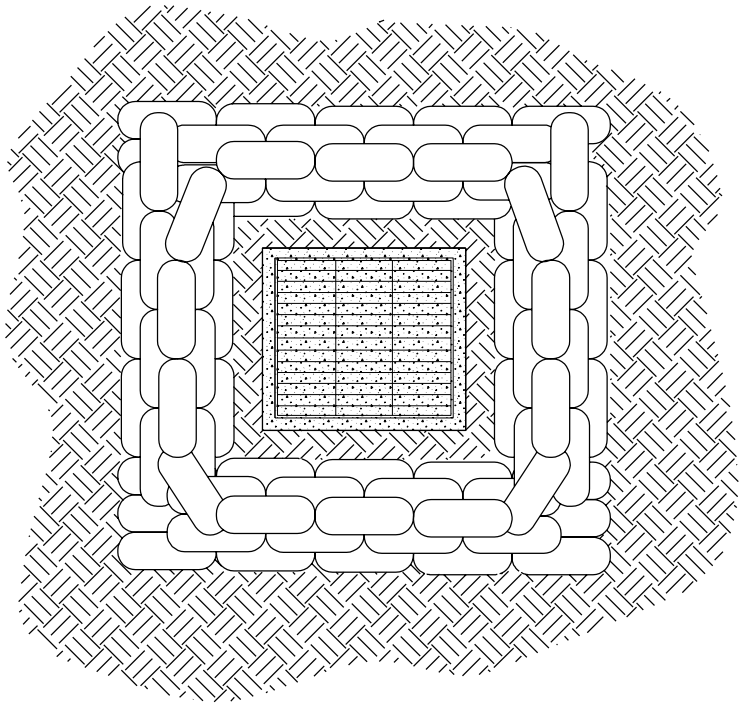

SANDBAG BARRIER - PLAN VIEW

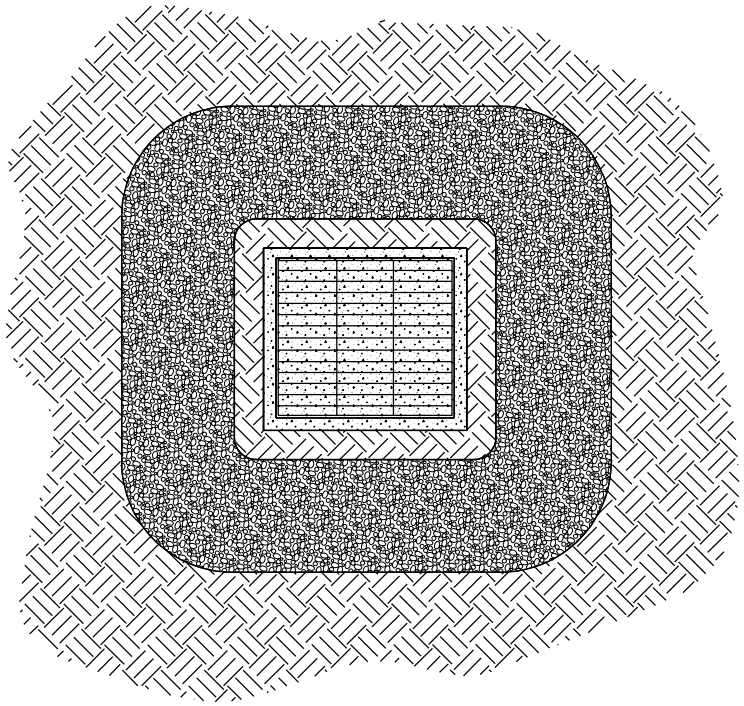

GRAVEL CHECK DAM - PLAN VIEW

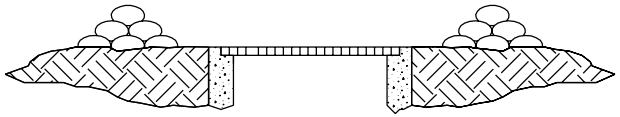

SANDBAG BARRIER - PROFILE VIEW

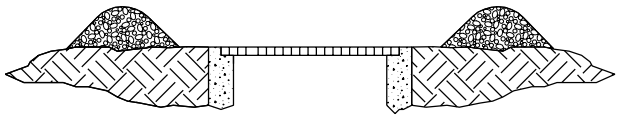

GRAVEL CHECK DAM - PROFILE VIEW

ALL DIMENSIONS ARE MILLIMETERS (mm) UNLESS OTHERWISE NOTED.

DETAILED DRAWING	
REFERENCE STANDARD SPEC. SECTION 208	DWG. NO. 208-46B
STORM DRAIN INLET PROTECTION (SC-10) (SHEET 2)	
EFFECTIVE: FEBRUARY 2005	
serving you with pride	MONTANA DEPARTMENT OF TRANSPORTATION

SYMBOL: ——— DDB ———

DUGOUT DITCH BASIN SC-11:

DUGOUT DITCH BASINS CONSIST OF ONE OR A SERIES OF SMALL DUGOUT BASINS USED FOR CONCENTRATED FLOWS TO REDUCE RUNOFF VELOCITY, PROMOTE SEDIMENT RETENTION AND ALLOW SETTLING. THE MAXIMUM HEIGHT FOR DUGOUT DITCH BASINS USED INSIDE THE CLEAR ZONE IS 150 mm.

DUGOUT DITCH BASINS ARE USED FOR LONGITUDINAL SLOPE STEEPNESS (GRADE) SEDIMENT RETENTION. APPLICATIONS INCLUDE DITCH SEDIMENT TRAPS, INTERCEPTOR DITCHES AND TOE OF SLOPE PROTECTION. USE IS DEPENDENT ON SOIL TYPE. DISTANCES BETWEEN DUGOUT DITCH BASINS ARE AS FOLLOWS:

- FROM 2% TO 3% PLACE DUGOUT DITCH BASINS AT 90 METER SPACING
- FROM 3% TO 4% PLACE DUGOUT DITCH BASINS AT 45 METER SPACING
- FROM 4% + PLACE DUGOUT DITCH BASINS AT 15 METER SPACING

DUGOUT DITCH BASIN SPACING CAN BE ADJUSTED ON A PROJECT-BY-PROJECT BASIS FOLLOWING ENGINEERS APPROVAL.

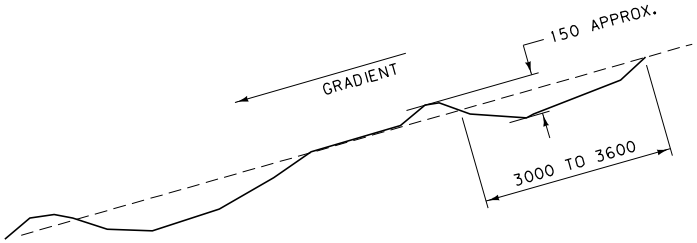

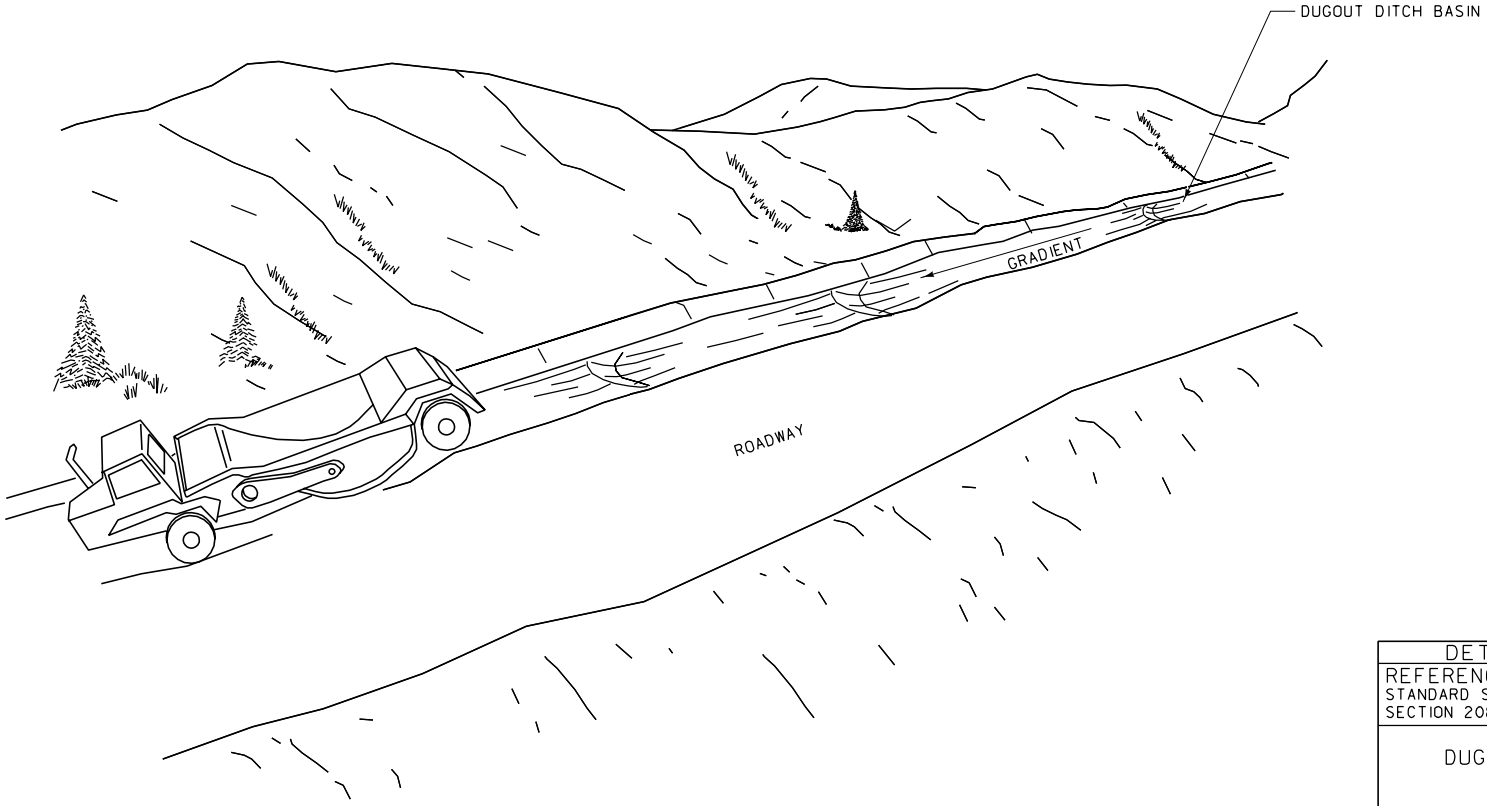

ALL DIMENSIONS ARE MILLIMETERS (mm) UNLESS OTHERWISE NOTED.

DETAILED DRAWING	
REFERENCE STANDARD SPEC. SECTION 208	DWG. NO. 208-48
DUGOUT DITCH BASIN (SC-11)	
EFFECTIVE: FEBRUARY 2005	
serving you with pride	MONTANA DEPARTMENT OF TRANSPORTATION

WIND EROSION CONTROL WE-1:

WIND EROSION CONTROL CONSISTS OF APPLYING WATER OR OTHER DUST SUPPRESSANTS, ROUGHENING SURFACES OR INSTALLING WIND BARRIERS TO PREVENT WIND EROSION BY PROTECTING SOIL SURFACES OR BY REDUCING WIND VELOCITIES.

WATER SPRAYING:

APPLY BY MEANS OF PRESSURE-TYPE DISTRIBUTORS OR PIPELINES EQUIPPED WITH A SPRAY SYSTEM OR HOSES AND NOZZLES THAT MAY ENSURE EVEN DISTRIBUTION. DO NOT USE EXCESSIVE AMOUNTS OF WATER FOR DUST SUPPRESSION THAT MAY CAUSE SOILS TO BECOME SATURATED AND CREATE OTHER PROBLEMS SUCH AS EXCESS RUNOFF, MUD/DIRT TRACKING OR ICING IN THE WINTER MONTHS. EQUIP ALL DISTRIBUTION SYSTEMS WITH A POSITIVE MEANS OF SHUTOFF. UNLESS WATER IS APPLIED BY MEANS OF PIPELINES, AT LEAST ONE MOBILE IS REQUIRED TO BE AVAILABLE AT ALL TIMES ON THE CONSTRUCTION SITE TO APPLY WATER OR DUST SUPPRESSANTS. IF RECLAIMED WASTEWATER IS USED, THE SOURCES AND DISCHARGE MUST MEET MONTANA DEQ WATER RECLAMATION CRITERIA. DO NOT USE NON-POTABLE WATER IN TANKS OR DRAIN PIPES THAT MAY BE USED TO CONVEY POTABLE WATER. DO NOT CONNECT BETWEEN POTABLE AND NON-POTABLE SUPPLIES. MARK ALL NON-POTABLE TANKS, PIPES AND OTHER CONVEYANCES AS "NON-POTABLE WATER - DO NOT DRINK".

DUST SUPPRESSANTS:

MATERIALS APPLIED AS TEMPORARY SOIL STABILIZERS AND SOIL BINDERS MAY ALSO PROVIDE WIND EROSION CONTROL BENEFITS. APPLY THESE MATERIALS PER MANUFACTURE'S SPECIFICATIONS IN ACCORDANCE WITH ALL FEDERAL, STATE AND LOCAL REGULATIONS. SEE SS-5 SOIL BINDERS.

CALCIUM CHLORIDE OR OTHER DUST SUPPRESSANTS USED ON ROADWAYS THAT ARE NOT LISTED IN SS-5 MUST MEET MDT SPECIFICATIONS AND/OR BE APPROVED BY THE ENGINEER PRIOR TO USE.

SLOPE ROUGHENING:

REFER TO SLOPE ROUGHENING TECHNIQUES DISCUSSED IN SS-12 SLOPE ROUGHENING.

WIND BARRIERS:

WIND BARRIERS PROVIDE AN AREA OF REDUCED WIND VELOCITY WHICH ALLOWS SETTLING OF LARGE SEDIMENT PARTICLES. MAXIMUM REDUCTION OF WIND VELOCITIES OCCUR IMMEDIATELY DOWNWIND OF THE WIND BARRIER, GRADUALLY DECREASING FURTHER DOWNWIND.

USE TEMPORARY WIND FENCING AS WIND BARRIERS ON CONSTRUCTION SITES. BOARD FENCING, EARTHEN BANKS, STRAW ROWS, ROCK WALLS, OR OTHER TEMPORARY WIND BARRIERS MAY BE UTILIZED AS APPROVED BY THE ENGINEER. WIND FENCING CAUSES WIND VELOCITY TO SLOW DOWN FOR APPROXIMATELY 40-50 TIMES THE FENCE HEIGHT, HOWEVER THE WIND FENCING IS ONLY EFFECTIVE FOR WIND BREAKING FOR APPROXIMATELY 10-25 TIMES THE HEIGHT OF THE FENCE. WIND FENCE IS REQUIRED TO BE A PREFABRICATED COMMERCIAL PRODUCT MADE OF WOVEN POLYETHYLENE AND ULTRAVIOLET RESISTANT MATERIAL WITH A POROSITY OF 50% MINIMUM. WIND FENCING IS MOST PROTECTIVE IN A DIRECTION THAT IS PERPENDICULAR TO THE WIND DIRECTION. FOR WIND PROTECTION OF STOCKPILES, PLACE WIND FENCING APPROXIMATELY 3 PILE HEIGHTS UPWIND OF THE STOCKPILE BASE.

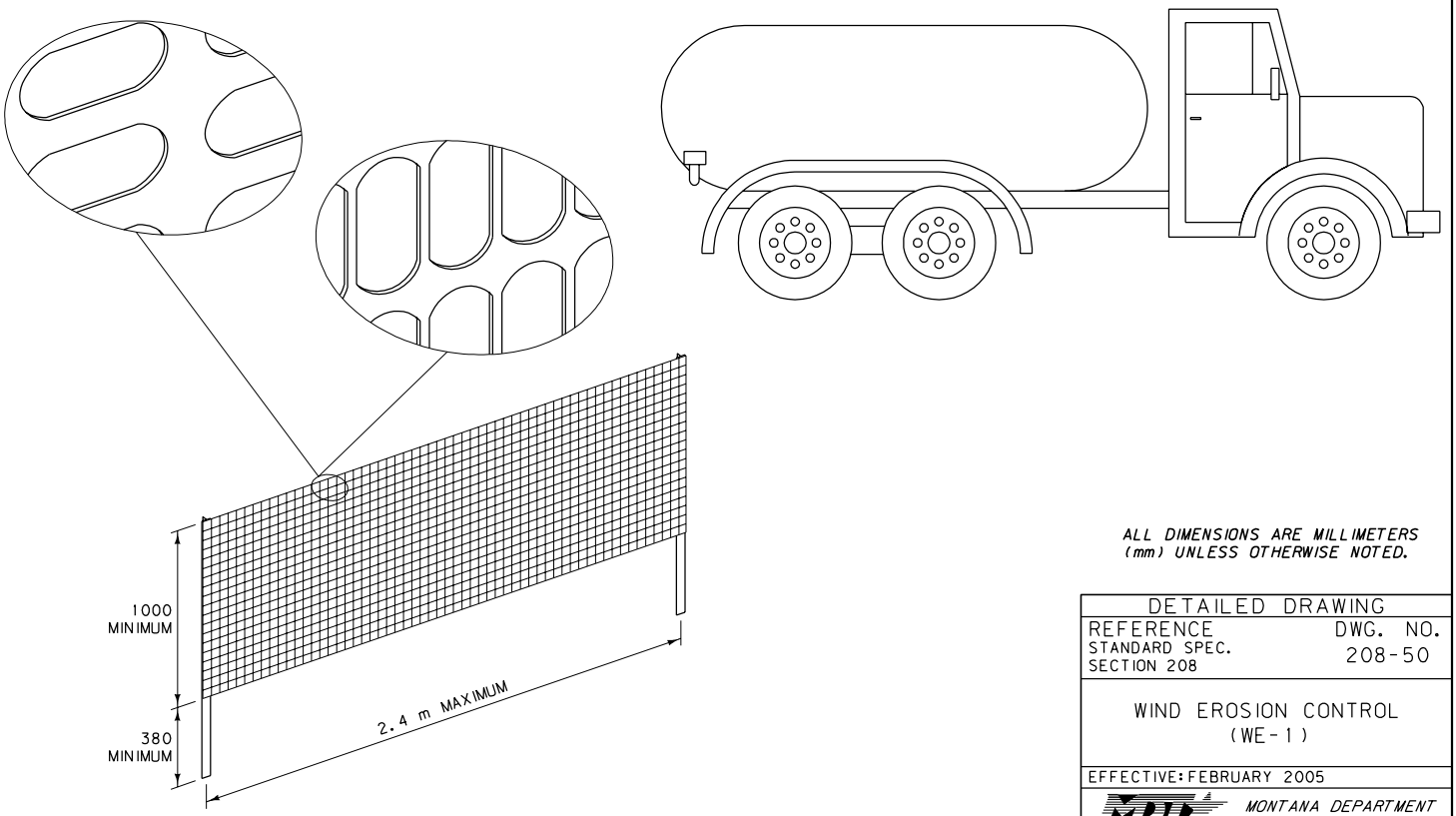

ALL DIMENSIONS ARE MILLIMETERS (mm) UNLESS OTHERWISE NOTED.

DETAILED DRAWING	
REFERENCE STANDARD SPEC. SECTION 208	DWG. NO. 208-50
WIND EROSION CONTROL (WE-1)	
EFFECTIVE: FEBRUARY 2005	

serving you with pride

MONTANA DEPARTMENT OF TRANSPORTATION

SNOW ACCUMULATION MANAGEMENT (SN-2):

SNOW ACCUMULATION BARRIERS PROVIDE AN AREA OF REDUCED WIND VELOCITY WHICH ALLOWS SETTLING OF SNOW. MAXIMUM REDUCTION OF WIND VELOCITIES OCCUR IMMEDIATELY DOWNWIND OF THE SNOW BARRIER, GRADUALLY DECREASING FURTHER DOWNWIND.

SNOW FENCING IS ONLY EFFECTIVE FOR DRIFT CONTROL FOR APPROXIMATELY 15-20 TIMES THE HEIGHT OF THE FENCE. SNOW FENCE IS REQUIRED TO BE A PREFABRICATED COMMERCIAL PRODUCT MADE OF WOVEN POLYETHYLENE AND ULTRAVIOLET RESISTANT MATERIAL WITH A POROSITY OF 40-60%. SNOW FENCING IS MOST PROTECTIVE IN A DIRECTION THAT IS PERPENDICULAR TO THE WIND DIRECTION. SEVERAL PARALLEL FENCES CAN BE USED IN AREAS OF HIGH SNOW ACCUMULATION OR HIGH WIND CONDITIONS. SECURE FENCING TO APPROVED POSTS WITH FOLLOWING MANUFACTURE RECOMMENDATIONS.

MAINTAIN SNOW FENCING AS NEEDED OR AS SPECIFIED BY THE ENGINEER. REMOVE SNOW ACCUMULATIONS FROM FENCING ONCE LEVELS HAVE REACHED THE BOTTOM OF THE FENCE.

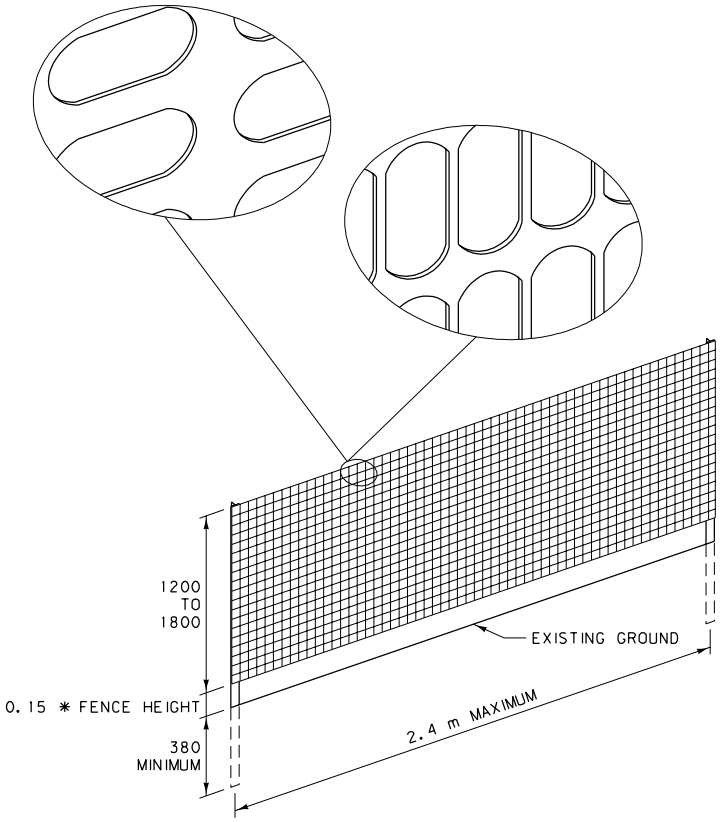

ALL DIMENSIONS ARE MILLIMETERS (mm) UNLESS OTHERWISE NOTED.

DETAILED DRAWING	
REFERENCE STANDARD SPEC. SECTION 208	DWG. NO. 208-52
SNOW ACCUMULATION MANAGEMENT (SN-2)	
EFFECTIVE: FEBRUARY 2005	
serving you with pride	MONTANA DEPARTMENT OF TRANSPORTATION

FREEZE REDUCTION SN-3:

FREEZE REDUCTION BMPS ARE USED TO ENSURE THAT CRITICAL CULVERTS DO NOT FREEZE DURING THE WINTER MONTHS. USE HEAT TRACE IN CULVERTS TO PREVENT FREEZING. IN ENGINEER APPROVED CONDITIONS A DOUBLE CULVERT SYSTEM MAY BE USED. WITH THIS SYSTEM IF ONE CULVERT FREEZES A SECOND, HIGHER OR LOWER, CULVERT WILL CONTAIN RUNOFF.

ALL ELECTRICAL WORK TO BE COMPLETED BY A LICENSED ELECTRICIAN IN ACCORDANCE WITH NATIONAL ELECTRICAL CODES AND MDT STANDARD SPECIFICATIONS. HEAT CABLE IS INTENDED FOR CONTINUOUS OPERATION IN THE WINTER AND CAN NOT BE USED TO THAW FROZEN CULVERTS.

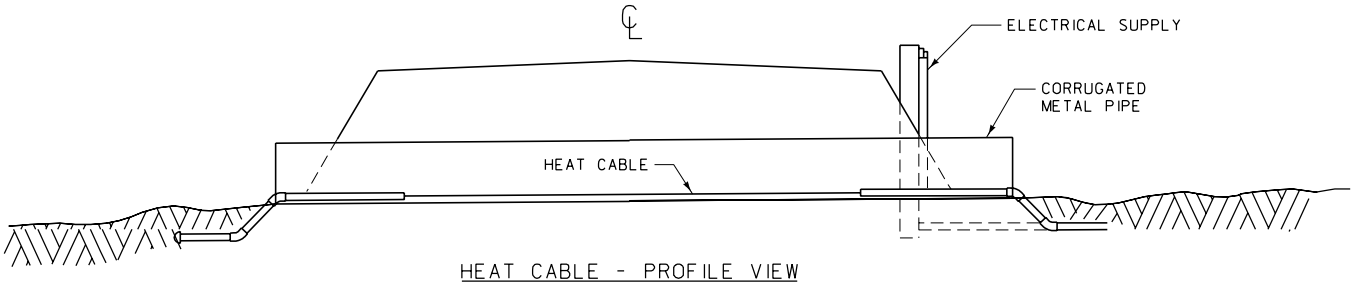

HEAT CABLE - PROFILE VIEW

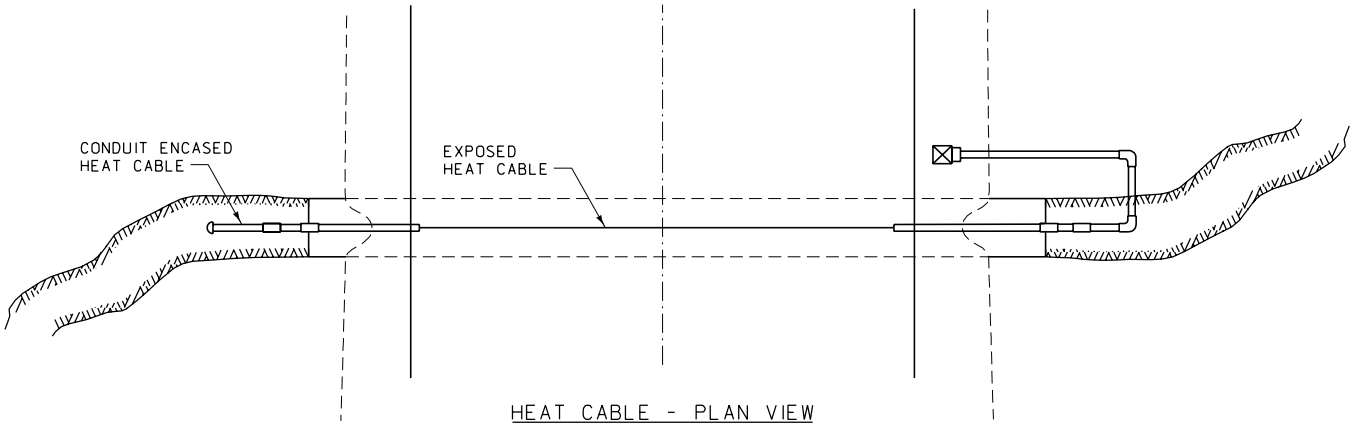

HEAT CABLE - PLAN VIEW

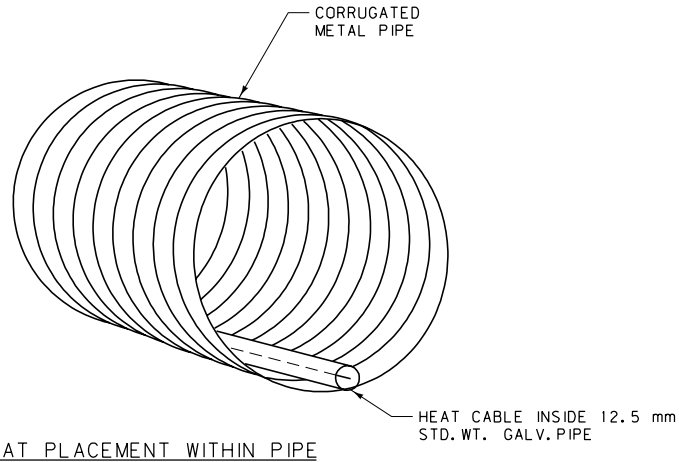

HEAT PLACEMENT WITHIN PIPE

ALL DIMENSIONS ARE MILLIMETERS (mm) UNLESS OTHERWISE NOTED.

DETAILED DRAWING	
REFERENCE STANDARD SPEC. SECTION 208	DWG. NO. 208-54
FREEZE REDUCTION (SN-3)	
EFFECTIVE: FEBRUARY 2005	
serving you with pride	MONTANA DEPARTMENT OF TRANSPORTATION

SYMBOL: SCEE

STABILIZED CONSTRUCTION ENTRANCE/EXIT TC-1:

A STABILIZED CONSTRUCTION ACCESS IS A DEFINED POINT OF ENTRANCE/EXIT TO A CONSTRUCTION SITE THAT IS STABILIZED TO REDUCE THE TRACKING OF MUD AND DIRT ONTO PUBLIC ROADS BY CONSTRUCTION VEHICLES.

USE STABILIZED CONSTRUCTION ACCESSES WHERE DIRT AND MUD MAY BE TRACKED ONTO PUBLIC ROADS, ADJACENT TO WATER BODIES, WHERE POOR SOILS ARE ENCOUNTERED, WHERE DUST MAY BE A PROBLEM, OR AS SPECIFIED BY THE ENGINEER.

CONSTRUCT STABILIZED CONSTRUCTION ENTRANCES WITH GRAVEL CONSISTING OF 100% PASSING THE 50 mm SCREEN AND A MAXIMUM OF 10% PASSING THE 9.5 mm SIEVE OR OTHER ENGINEER APPROVED MATERIAL. PROPERLY GRADE ENTRANCES/EXITS TO PREVENT RUNOFF FROM LEAVING THE SITE. PLACE A MOUNDED BERM OF MATERIAL IF REQUIRED TO PREVENT STORM WATER RUN ON/ RUNOFF AND/OR PROVIDE COVER FOR DRAIN PIPE. ROUTE STORM WATER RUNOFF TO A SEDIMENT CONTROL DEVICE BEFORE RUNOFF EXITS THE SITE.

STABILIZED CONSTRUCTION ENTRANCE SHALL BE MAINTAINED TO PREVENT TRACKING OF SEDIMENT OFF OF THE SITE. REMOVE AND REPLACE AGGREGATE WHEN VOIDS ARE FILLED OR AS DIRECTED BY THE ENGINEER.

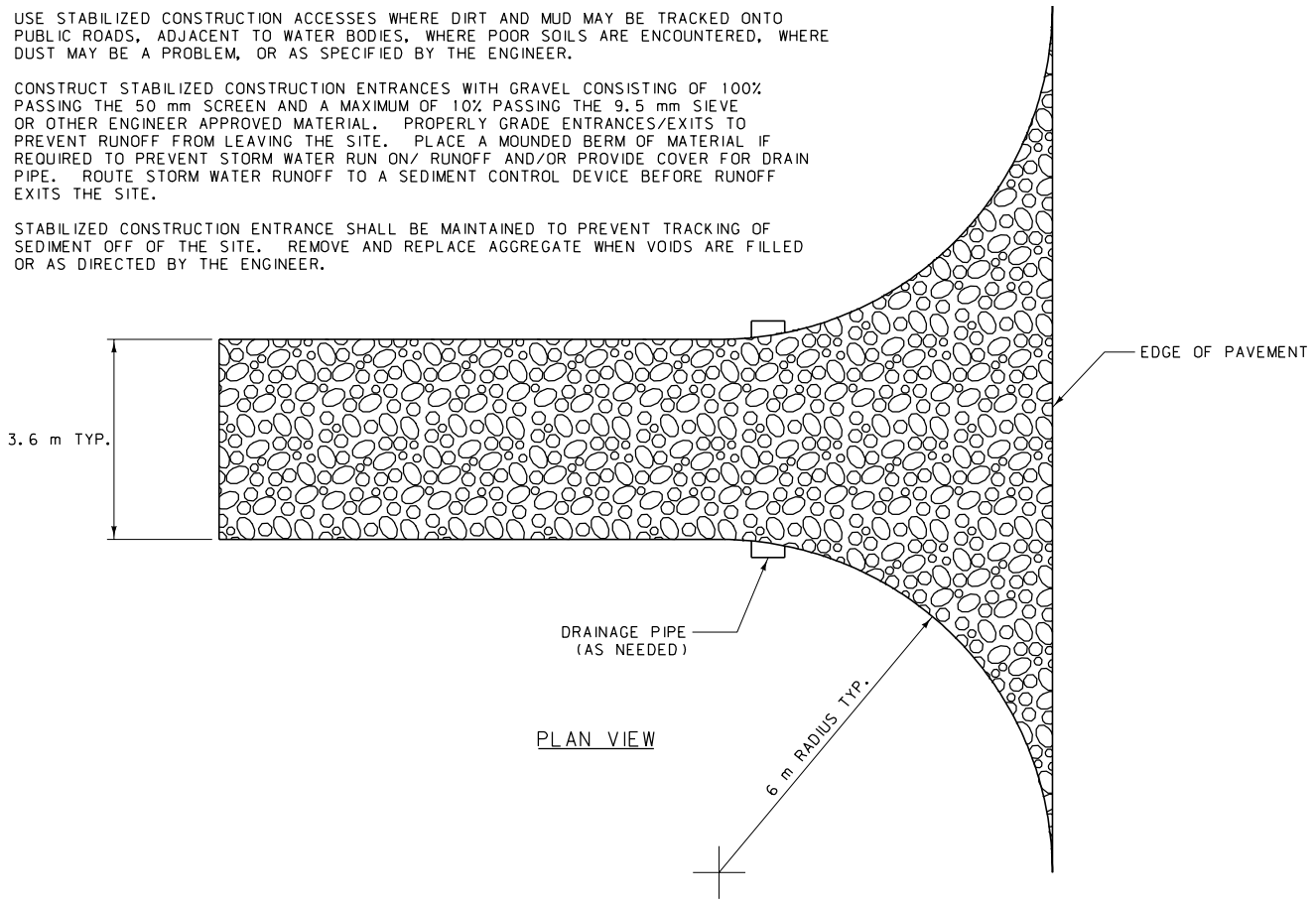

PLAN VIEW

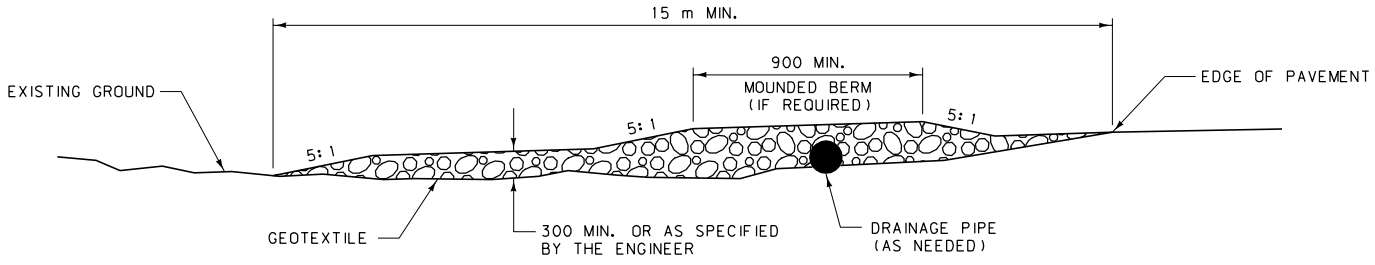

PROFILE VIEW

ALL DIMENSIONS ARE MILLIMETERS (mm) UNLESS OTHERWISE NOTED.

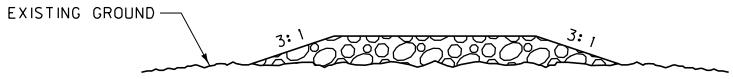

END VIEW

DETAILED DRAWING	
REFERENCE STANDARD SPEC. SECTION 208	DWG. NO. 208-56
STABILIZED CONSTRUCTION ENTRANCE/EXIT (TC-1)	
EFFECTIVE: FEBRUARY 2005	
serving you with pride — MONTANA DEPARTMENT OF TRANSPORTATION	

SYMBOL: EETW

ENTRANCE/EXIT TIRE WASH TC-3:

A TIRE WASH IS AN AREA LOCATED AT A STABILIZED CONSTRUCTION ACCESS POINT WHERE PRESSURIZED WATER IS USED TO REMOVE SEDIMENT FROM TIRES AND UNDERCARRIAGE, AND TO PREVENT SEDIMENT FROM BEING TRANSPORTED ONTO PUBLIC ROADWAYS.

TIRE WASHES ARE MEANT TO BE USED ON A PROJECT-BY-PROJECT BASIS AND REQUIRES APPROVAL BY THE ENGINEER. THESE DEVICES REQUIRE A SUPPLY OF WASH WATER AND MAY REQUIRE A TURNOUT OR DOUBLE WIDE ACCESS.

FOLLOW BMP TC-1 FOR STABILIZED CONSTRUCTION ENTRANCES/EXITS. PROVIDE WASH RACK SUITABLE FOR SUPPORTING TRAFFIC LOADS. DIRECT WASH WATER FROM THE RACK, THROUGH A DRAINAGE DITCH, TO A SEDIMENT TRAP DEVICE. ENGINEERS APPROVAL IS REQUIRED PRIOR TO CONSTRUCTION.

TIRE WASH DEVICES OTHER THEN THOSE SHOWN MAY BE USED AS APPROVED BY THE ENGINEER.

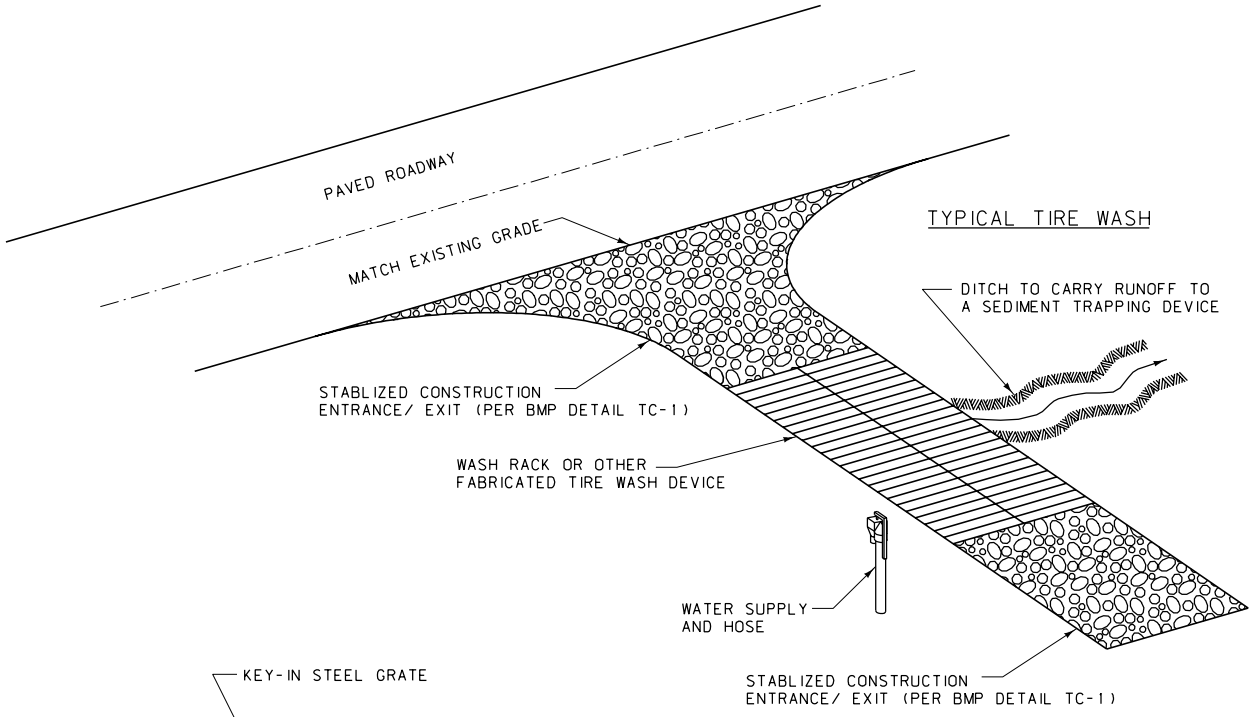

TYPICAL TIRE WASH

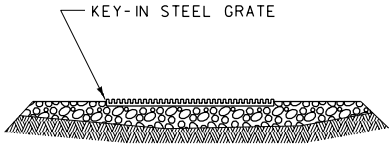

STEEL GRATE WASH RACK

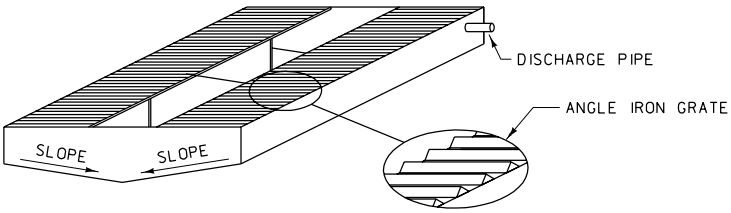

SELF-CONTAINED STEEL TIRE WASH

ALL DIMENSIONS ARE MILLIMETERS (mm) UNLESS OTHERWISE NOTED.

DETAILED DRAWING	
REFERENCE STANDARD SPEC. SECTION 208	DWG. NO. 208-58
ENTRANCE/EXIT TIRE WASH (TC-3)	
EFFECTIVE: FEBRUARY 2005	
serving you with pride	MONTANA DEPARTMENT OF TRANSPORTATION

TEMPORARY STREAM CROSSINGS NS-4:

A TEMPORARY STREAM CROSSING IS A STRUCTURE PLACED ACROSS A WATERWAY THAT ALLOWS VEHICLES AND/OR HEAVY EQUIPMENT TO CROSS THE WATERWAY DURING CONSTRUCTION. THE STREAM CROSSINGS PROTECT THE STREAM BANKS AND CHANNELS FROM DAMAGE CAUSED BY VEHICLE MOVEMENT WHICH RELEASES SEDIMENT.

TEMPORARY STREAM CROSSINGS CAN CONSIST OF BRIDGES, CULVERTS OR FORDS. FOLLOW STREAM CROSSING GUIDELINES PROVIDED IN THE MDT/FWP TASK FORCE RECOMMENDATIONS REPORT. TEMPORARY STREAM CROSSINGS REQUIRE THE ACQUISITION OF SPECIAL PERMITS.

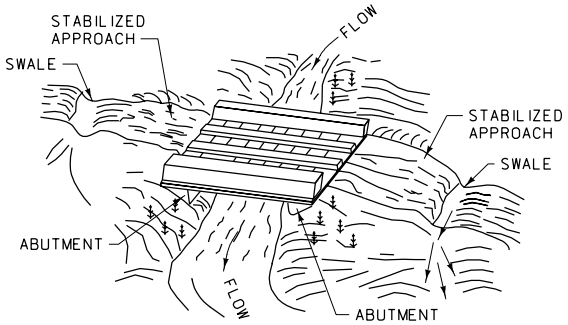

NOTE:

SURFACE FLOW OF ROAD DIVERTED BY SWALE AND/OR DIKE

TYPICAL BRIDGE CROSSING

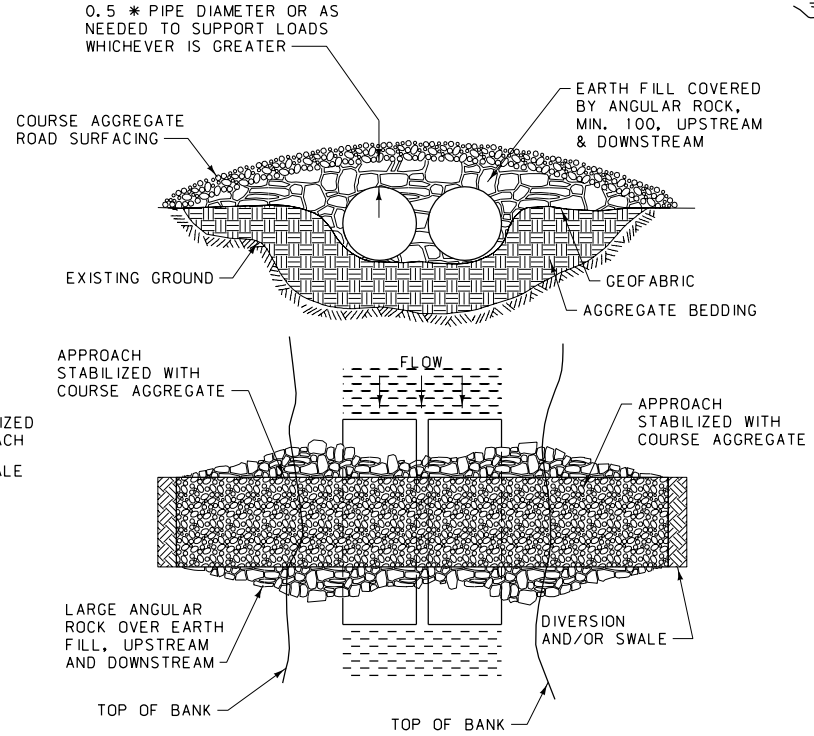

TYPICAL CULVERT CROSSING

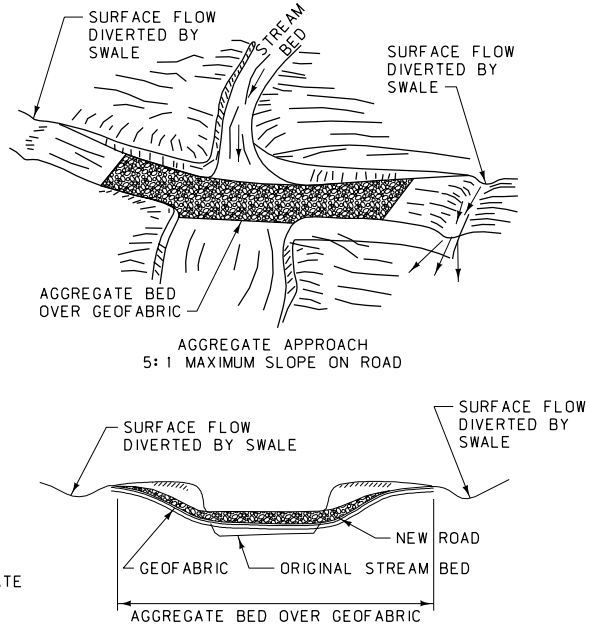

TYPICAL FORD CROSSING

ALL DIMENSIONS ARE MILLIMETERS (mm) UNLESS OTHERWISE NOTED.

DETAILED DRAWING	
REFERENCE STANDARD SPEC. SECTION 208	DWG. NO. 208-60
TEMPORARY STREAM CROSSINGS (NS-4)	
EFFECTIVE: FEBRUARY 2005	
serving you with pride	MONTANA DEPARTMENT OF TRANSPORTATION

* DETERMINE THE METHOD OF INSTALLATION FOR RUMBLE STRIPS ON EXISTING CONCRETE SHOULDERS ON A CASE-BY-CASE BASIS.

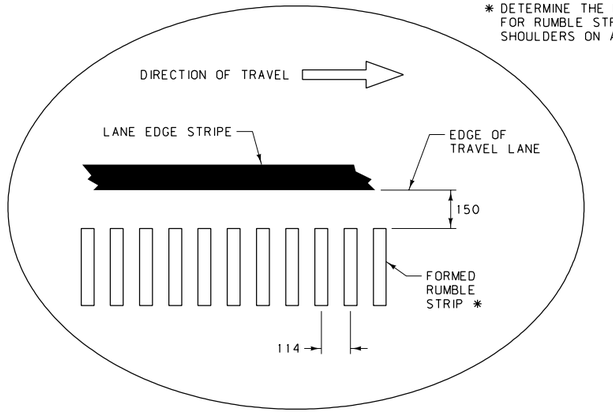

TYPICAL SHOULDER INSTALLATION (CONCRETE PAVEMENT)

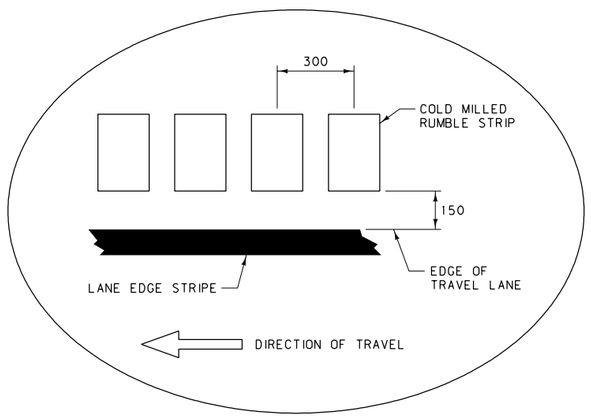

TYPICAL SHOULDER INSTALLATION (ASPHALT PAVEMENT)

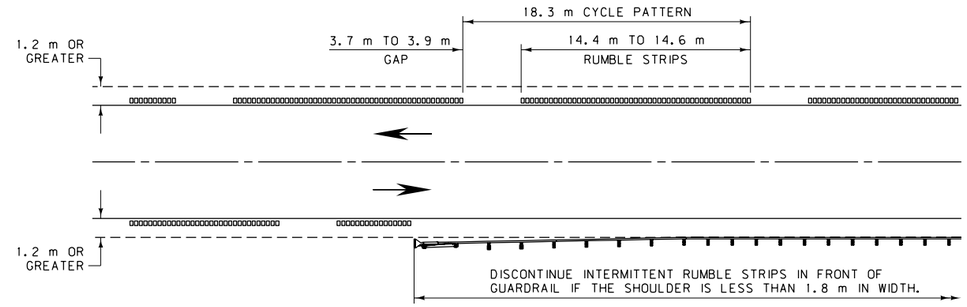

INTERMITTENT RUMBLE STRIP SPACING

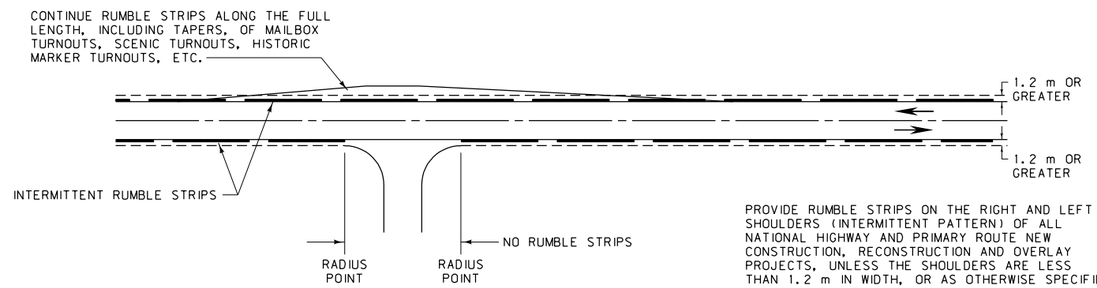

PROVIDE RUMBLE STRIPS ON THE RIGHT AND LEFT SHOULDERS (INTERMITTENT PATTERN) OF ALL NATIONAL HIGHWAY AND PRIMARY ROUTE NEW CONSTRUCTION, RECONSTRUCTION AND OVERLAY PROJECTS, UNLESS THE SHOULDERS ARE LESS THAN 1.2 m IN WIDTH, OR AS OTHERWISE SPECIFIED.

ON SEGMENTS OF NATIONAL HIGHWAY OR PRIMARY ROUTES WITHIN DESIGNATED CITY OR URBAN LIMITS, USE ENGINEERING JUDGEMENT ON A CASE-BY-CASE BASIS TO DETERMINE IF RUMBLE STRIP INSTALLATION IS APPROPRIATE.

NATIONAL HIGHWAY ROUTE OR PRIMARY ROUTE APPLICATION

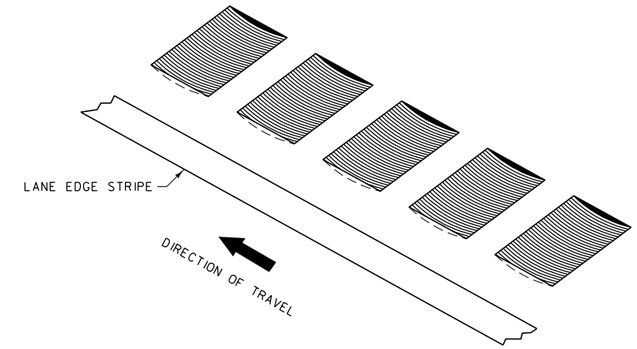

ISOMETRIC VIEW

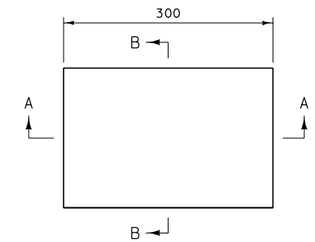

PLAN

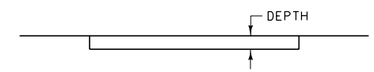

SECTION A-A

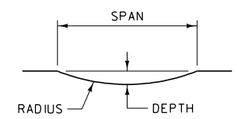

SECTION B-B

	DEPTH	RADIUS	SPAN
CONCRETE	25	25	50
ASPHALT	13 TO 19	300 MAX.	175 TO 200

RUMBLE STRIP DETAIL

NOTE:

DO NOT INSTALL RUMBLE STRIPS OVER CONCRETE BRIDGE DECKS OR WHERE OBSTACLES, SUCH AS CONCRETE BARRIER RAIL, PREVENT PROPER PLACEMENT.

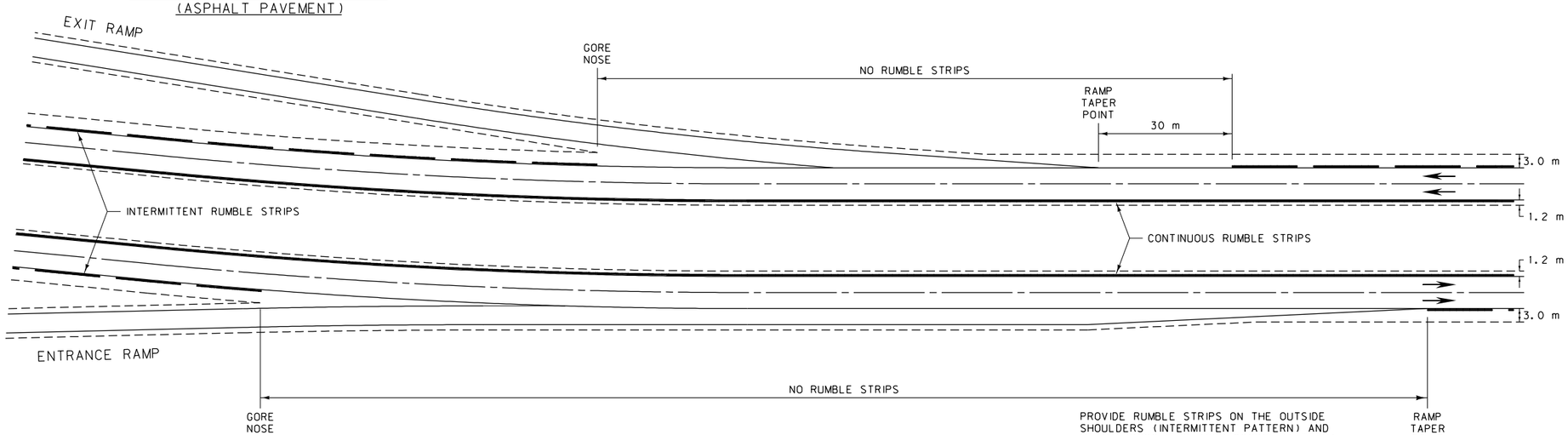

PROVIDE RUMBLE STRIPS ON THE OUTSIDE SHOULDERS (INTERMITTENT PATTERN) AND MEDIAN SHOULDERS (CONTINUOUS PATTERN) OF ALL INTERSTATE NEW CONSTRUCTION, RECONSTRUCTION AND OVERLAY PROJECTS.

DISCONTINUE RUMBLE STRIPS IN FRONT OF EXIT AND ENTRANCE RAMPS.

INTERSTATE APPLICATION

ALL DIMENSIONS ARE MILLIMETERS (mm) UNLESS OTHERWISE NOTED.

DETAILED DRAWING

REFERENCE STANDARD SPEC. SECTION 401

DWG. NO. 401-02

SHOULDER RUMBLE STRIPS

EFFECTIVE: FEBRUARY 2005

MDT serving you with pride — MONTANA DEPARTMENT OF TRANSPORTATION

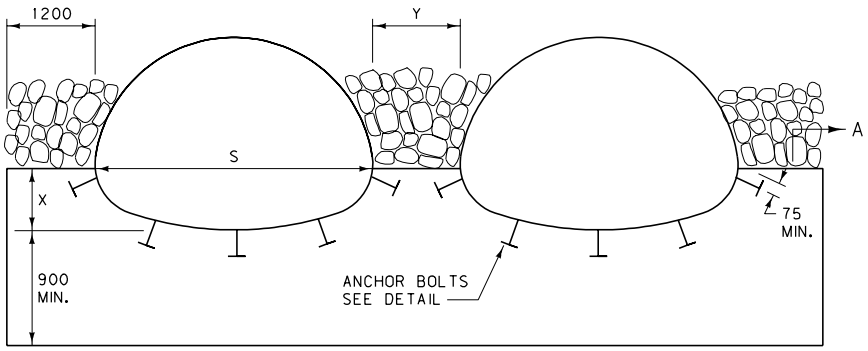

MULTIPLE ARCH CULVERTS

(METAL CULVERTS SHOWN)

X: VARIABLE (SEE DTL. DWG. NO. 603-10 FOR CONCRETE CULV. AND 603-34 FOR METAL CULV.)

Y: FOR METAL CULV. AND CULV. WITHOUT FETS: Y = 1200 (OUTSIDE WALL TO OUTSIDE WALL)

FOR CONRETE CULV. WITH FETS: USE Y AS REQUIRED FOR PARALLEL PIPE INSTALLATION, PER DTL. DWG. NO. 613-08

NOTE: Y MAY BE INCREASED ON LARGE DIAMETER PIPES (UP TO A MAX. OF 2400) TO AID IN INSTALLATION AND BACKFILL. THE QUANTITIES SHOWN IN 552-04, 06 & 08 WERE FIGURED USING Y = 1200. ADJUST QUANTITIES AS NEEDED WHEN Y IS OTHER THAN 1200.

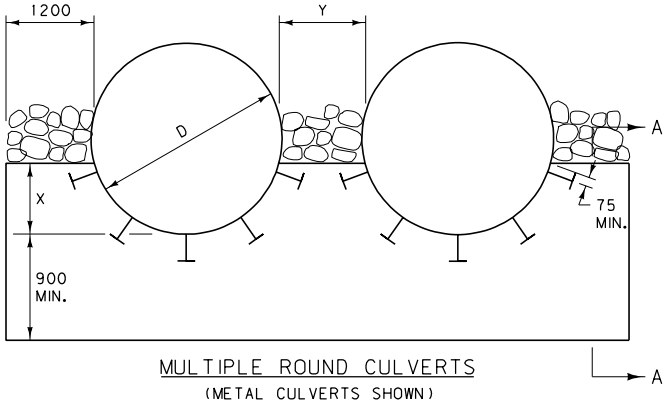

MULTIPLE ROUND CULVERTS

(METAL CULVERTS SHOWN)

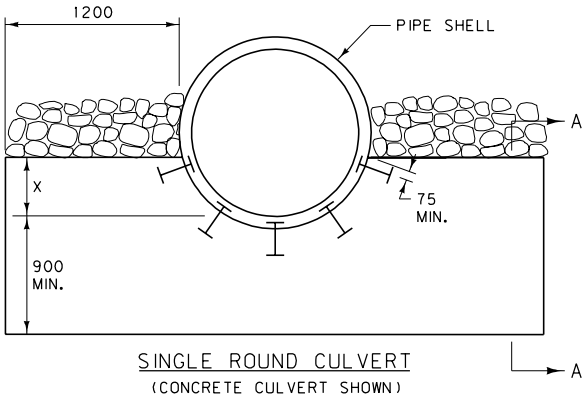

SINGLE ROUND CULVERT

(CONCRETE CULVERT SHOWN)

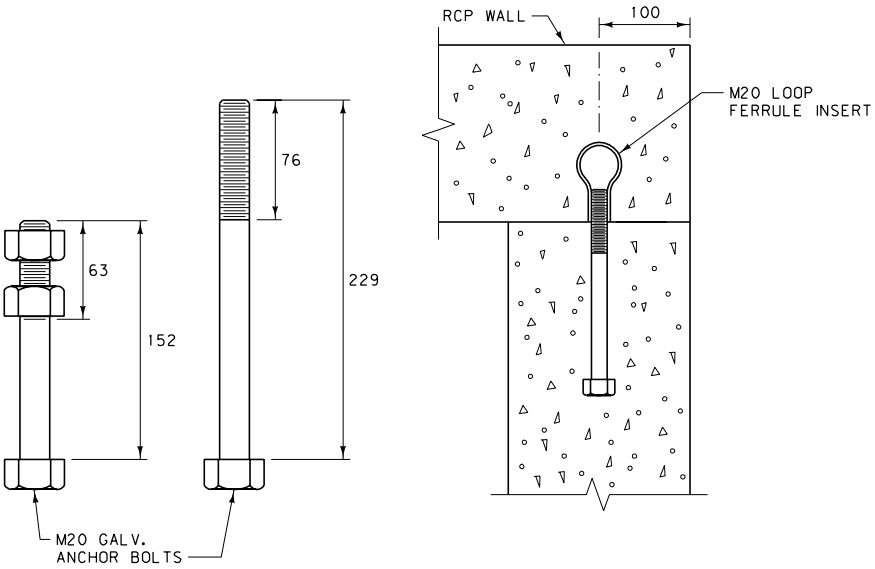

ANCHOR BOLT DETAILS

152 mm LONG FOR METAL PIPE
229 mm LONG FOR CONCRETE PIPE

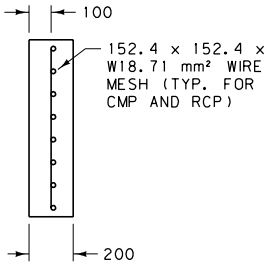

SECTION A-A

NOTES:

USE CL. "DD" CONCRETE OR EQUAL.

SEE DTL. DWG. NO. 603-18 AND 603-20 FOR BEDDING UNDER CULVERTS.

SEE DTL. DWG. NO. 613-14 FOR RIPRAP.

ANCHOR BOLT SPACING:
MIN. OF FIVE M20 GALV. ANCHOR BOLTS IN WALL. USE MAX. SPACING OF 455 mm.

ALL DIMENSIONS ARE MILLIMETERS (mm) UNLESS OTHERWISE NOTED.

DETAILED DRAWING	
REFERENCE STANDARD SPEC. SECTION 552	DWG. NO. 552-00
CONCRETE CUTOFF WALLS FOR CULVERTS	
EFFECTIVE: FEBRUARY 2005	

serving you with pride — MONTANA DEPARTMENT OF TRANSPORTATION

DIAMETER OR SPAN x RISE (mm)	CUBIC METERS OF CLASS DD CONCRETE (EACH END)								CUBIC METERS OF RIPRAP (EACH END) ① (DTL. DWG. NO. 613-14)						m³ BEDDING MATERIAL ② PER METER OF PIPE (DTL. DWG. NO. 603-18)	
	CUTOFF WALL (DTL. DWG. NO. 552-00)		CONCRETE EDGE PROTECTION (DTL. DWG. NO. 613-08)													
			1.5:1		2:1		2.5:1		1.5:1		2:1		2.5:1			
	SING.	DBL.	SING.	DBL.	SING.	DBL.	SING.	DBL.	SING.	DBL.	SING.	DBL.	SING.	DBL.	SING.	DBL.
RCP (SQ. END)																
1200	0.9	1.6	1.5	2.3	1.8	2.7	~	~	6.2	9.9	7.7	12.3	~	~	2.34	4.68
1350	1.0	1.7	1.7	2.5	2.0	3.0	~	~	6.7	10.8	8.3	13.4	~	~	2.57	5.14
1500	1.1	1.8	1.8	2.7	2.2	3.3	~	~	7.2	11.7	9.0	14.5	~	~	2.80	5.60
1650	1.2	2.0	2.0	3.0	2.4	3.6	~	~	7.7	12.6	9.8	15.9	~	~	3.03	6.06
1800	1.2	2.1	2.2	3.2	2.6	3.9	~	~	8.4	13.7	10.4	17.0	~	~	3.27	6.54
1950	1.3	2.2	2.3	3.5	2.8	4.2	~	~	9.0	14.6	11.1	18.1	~	~	3.52	7.04
2100	1.4	2.4	2.5	3.7	3.0	4.5	~	~	9.5	15.6	11.8	19.3	~	~	3.78	7.56
2250	1.4	2.5	2.6	4.0	3.2	4.8	~	~	10.1	16.5	12.5	20.5	~	~	4.04	8.08
2400	1.5	2.6	2.8	4.2	3.4	5.1	~	~	10.6	17.5	13.2	21.7	~	~	4.31	8.62
RCPA (SQ. END)																
1485 x 915	0.9	1.4	1.5	2.2	1.8	2.7	~	~	6.2	10.1	7.7	12.6	~	~	2.39	4.78
1650 x 1015	0.9	1.5	1.6	2.5	1.9	2.9	~	~	6.7	11.0	8.3	13.6	~	~	2.60	5.20
1855 x 1145	1.0	1.6	1.8	2.7	2.1	3.3	~	~	7.3	12.0	9.0	15.0	~	~	2.84	5.68
2235 x 1370	1.1	1.8	2.1	3.3	2.6	3.9	~	~	8.6	14.5	10.7	17.9	~	~	3.27	6.54
2590 x 1575	1.1	2.0	2.5	3.8	3.0	4.6	~	~	9.8	16.6	12.2	20.5	~	~	3.66	7.32
2920 x 1830	1.3	2.2	2.7	4.3	3.3	5.2	~	~	10.8	18.3	13.3	22.7	~	~	4.15	8.30
3100 x 1960	1.3	2.2	2.9	4.6	3.6	5.6	~	~	11.5	19.6	14.3	24.4	~	~	4.33	8.66
3505 x 2215	1.4	2.4	3.4	5.3	4.1	6.4	~	~	13.1	22.4	16.2	27.8	~	~	4.81	9.62
3910 x 2460	1.5	2.6	3.8	6.1	4.6	7.4	~	~	14.7	25.3	18.2	31.4	~	~	5.31	10.62
4285 x 2705	1.6	2.8	4.0	6.4	4.9	7.8	~	~	15.4	26.7	19.1	33.1	~	~	5.73	11.46

DIAMETER OR SPAN x RISE (mm)	CUBIC METERS OF CLASS DD CONCRETE (EACH END)							CUBIC METERS OF RIPRAP (EACH END) ① (DTL. DWG. NO. 613-14)				SLOPE	m³ BEDDING MATERIAL ② PER LIN. m OF PIPE (DTL. DWG. NO. 603-18)	
	CUTOFF WALL (DTL. DWG. NO. 552-00)		CONCRETE EDGE PROTECTION (DTL. DWG. NO. 613-08)											
	SING.	DBL.		SING.	DBL.				SING.	DBL.				SING.	DBL.
RCP (FETS)															
1200	1.2	2.1		2.2	3.4				10.4	17.5			2.5:1	2.34	4.68
1350	1.3	2.2		2.0	3.1				9.3	15.7			2.0:1	2.57	5.14
1500	1.4	2.4		1.9	2.9				8.8	14.9			1.9:1	2.80	5.60
1650	1.4	2.3		2.2	3.4				9.8	16.7			1.7:1	3.03	6.06
1800	1.5	2.5		2.3	3.7				10.5	17.9			1.9:1	3.27	6.54
1950	1.5	2.6		2.6	4.1				11.6	19.8			1.8:1	3.52	7.04
2100	1.6	2.7		2.7	4.2				11.7	20.1			1.5:1	3.78	7.56
2250	1.7	2.9		2.8	4.5				12.3	21.3			1.5:1	4.04	8.08
RCPA (FETS)															
1485 x 915	1.2	2.0		2.1	3.3				10.8	18.3			3.0:1	2.39	4.78
1650 x 1015	1.3	2.2		2.2	3.4				11.3	19.2			3.0:1	2.60	5.20
1855 x 1145	1.4	2.3		2.3	3.6				11.9	20.4			3.0:1	2.84	5.68
2235 x 1370	1.5	2.6		2.1	3.4				10.4	18.0			2.0:1	3.27	6.54
2590 x 1575	1.6	2.8		3.1	4.9				14.1	24.4			2.0:1	2.98	5.97

NOTES:

① QUANTITIES ARE BASED ON A THICKNESS OF 600 mm AND ARE PROPORTIONED WHEN A DIFFERENT THICKNESS IS SPECIFIED.

② QUANTITIES ARE BASED ON NO. 3 FOUNDATION STABILIZATION WITH A WIDTH EQUAL TO (DIAMETER OR SPAN) + 1200 mm + (2 TIMES SHELL THICKNESS FOR CONCRETE OR 2 TIMES CORRUGATION WIDTH FOR METAL) AND A DEPTH EQUAL TO 600 mm PLUS "X". TO COMPUTE THE TOTAL BEDDING QUANTITY MULTIPLY BY (LENGTH OF PIPE MINUS 7.0 m).

SEE DTL. DWG. NO. 603-18 FOR DEFINITION OF NO. 3 FOUNDATION STABILIZATION AND "X" DIMENSION.

FOR PIPES WITH SKEW BEVEL ENDS - DIVIDE THE QUANTITIES SHOWN BY COSINE OF SKEW ANGLE.

ALL DIMENSIONS ARE MILLIMETERS (mm) UNLESS OTHERWISE NOTED.

DETAILED DRAWING

REFERENCE STANDARD SPEC. SECTION 552, 603, 613

DWG. NO. 552-04

CONCRETE, RIPRAP AND BEDDING MATERIAL QUANTITIES FOR SING. AND DBL. CULVERT INSTALLATION

EFFECTIVE: FEBRUARY 2005

serving you with pride

MONTANA DEPARTMENT OF TRANSPORTATION

DIAMETER OR SPAN x RISE (m)	CUBIC METERS OF CLASS DD CONCRETE (EACH END)								CUBIC METERS OF RIPRAP① (EACH END) (DTL. DWG. NO. 613-14)						m³ BEDDING MATERIAL ② PER METER OF PIPE (DTL. DWG. NO. 603-18)	
	CUTOFF WALL (DTL. DWG. NO. 552-00)		CONCRETE EDGE PROTECTION (DTL. DWG. NO. 613-06)													
			1.5:1		2:1		2.5:1		1.5:1		2:1		2.5:1			
	SING.	DBL.	SING.	DBL.	SING.	DBL.	SING.	DBL.	SING.	DBL.	SING.	DBL.	SING.	DBL.	SING.	DBL.
SSPPA 152 mm x 51 mm CORRUGATIONS 457 mm CORNER RADIUS																
1.850 x 1.400	1.0	1.7	1.5	2.2	1.8	2.6	2.1	3.1	6.1	10.0	7.6	12.5	9.2	15.0	2.64	5.28
1.930 x 1.450	1.0	1.8	1.5	2.3	1.8	2.8	2.2	3.3	6.4	10.5	8.0	13.0	9.6	15.7	2.66	5.32
2.060 x 1.500	1.1	1.9	1.6	2.4	1.9	2.9	2.2	3.4	6.6	10.8	8.3	13.6	10.0	16.4	2.83	5.66
2.130 x 1.550	1.1	1.9	1.7	2.5	2.0	3.0	2.4	3.5	6.8	11.2	8.5	14.0	10.4	17.1	2.84	5.68
2.210 x 1.600	1.1	1.9	1.7	2.6	2.1	3.1	2.5	3.7	7.1	11.7	8.8	14.5	10.7	17.5	2.85	5.70
2.340 x 1.650	1.2	2.0	1.8	2.7	2.1	3.2	2.5	3.8	7.4	12.2	9.2	15.2	11.1	18.3	3.03	6.06
2.410 x 1.700	1.2	2.0	1.9	2.8	2.2	3.4	2.6	4.0	7.6	12.5	9.5	15.8	11.5	19.0	3.03	6.06
2.490 x 1.750	1.2	2.0	1.9	2.9	2.3	3.5	2.8	4.2	7.8	12.9	9.7	16.1	11.8	19.4	3.02	6.04
2.620 x 1.800	1.2	2.1	2.0	3.0	2.4	3.6	2.8	4.3	8.1	13.5	10.1	16.7	12.2	20.2	3.22	6.44
2.690 x 1.850	1.2	2.1	2.1	3.1	2.5	3.8	2.9	4.4	8.3	13.7	10.4	17.3	12.6	20.9	3.21	6.42
2.840 x 1.910	1.3	2.2	2.1	3.2	2.5	3.9	3.0	4.6	8.6	14.3	10.6	17.8	12.8	21.4	3.43	6.86
2.900 x 1.960	1.3	2.2	2.2	3.3	2.6	4.0	3.1	4.7	8.9	14.8	11.0	18.4	13.3	22.1	3.41	6.82
2.970 x 2.010	1.3	2.2	2.3	3.5	2.7	4.2	3.2	4.9	9.1	15.1	11.4	19.0	13.7	22.9	3.37	6.74
3.120 x 2.060	1.3	2.3	2.3	3.5	2.8	4.3	3.3	5.0	9.3	15.7	11.6	19.4	14.0	23.4	3.62	7.24
3.250 x 2.110	1.4	2.4	2.3	3.6	2.8	4.4	3.3	5.2	9.5	16.0	11.8	19.8	14.2	23.9	3.85	7.70
3.330 x 2.160	1.4	2.4	2.4	3.8	2.9	4.5	3.5	5.4	9.8	16.5	12.2	20.5	14.7	24.7	3.83	7.66
3.480 x 2.210	1.5	2.6	2.5	3.8	3.0	4.6	3.5	5.5	10.0	16.8	12.4	20.9	14.9	25.2	4.08	8.16
3.530 x 2.260	1.5	2.5	2.6	4.0	3.1	4.8	3.7	5.7	10.3	17.4	12.8	21.6	15.4	26.0	4.05	8.10
3.610 x 2.310	1.4	2.5	2.7	4.1	3.2	5.0	3.8	5.9	10.6	17.9	13.2	22.2	15.9	26.8	4.01	8.02
3.760 x 2.360	1.5	2.7	2.7	4.2	3.3	5.1	3.9	6.0	10.8	18.3	13.4	22.7	16.1	27.3	4.27	8.54
3.810 x 2.410	1.5	2.6	2.8	4.3	3.4	5.2	4.0	6.2	11.1	18.8	13.8	23.4	16.6	28.1	4.24	8.48
3.860 x 2.460	1.5	2.6	2.9	4.5	3.5	5.4	4.1	6.4	11.4	19.4	14.2	24.0	17.1	28.9	4.18	8.36
3.910 x 2.540	1.5	2.6	3.0	4.6	3.6	5.6	4.3	6.6	11.8	19.9	14.6	24.7	17.6	29.7	4.12	8.24
4.090 x 2.570	1.6	2.8	3.0	4.7	3.6	5.7	4.3	6.7	12.0	20.3	14.8	25.2	17.9	30.3	4.41	8.82
SSPPA 152 mm x 51 mm CORRUGATIONS 787 mm CORNER RADIUS																
4.040 x 2.840	1.8	3.2	2.8	4.4	3.4	5.3	4.0	6.3	11.2	19.0	13.9	23.6	16.7	28.5	5.23	10.46
4.110 x 2.900	1.8	3.2	2.9	4.5	3.5	5.5	4.1	6.5	11.4	19.5	14.2	24.2	17.1	29.2	5.19	10.38
4.270 x 2.950	1.9	3.3	2.9	4.7	3.5	5.6	4.2	6.6	11.7	19.9	14.5	24.8	17.5	29.9	5.46	10.92
4.320 x 3.000	1.9	3.3	3.1	4.8	3.7	5.8	4.4	6.9	12.1	20.7	15.0	25.7	18.1	31.0	5.39	10.78
4.390 x 3.050	1.9	3.3	3.2	5.0	3.8	6.0	4.5	7.1	12.4	21.2	15.4	26.3	18.6	31.8	5.34	10.68
4.550 x 3.100	2.0	3.4	3.2	5.0	3.8	6.1	4.6	7.2	12.5	21.5	15.6	26.7	18.8	32.2	5.66	11.32
4.670 x 3.150	2.1	3.6	3.2	5.1	3.9	6.1	4.6	7.3	12.6	21.7	15.7	27.0	18.9	32.6	5.98	11.96
4.750 x 3.200	2.0	3.6	3.3	5.3	4.0	6.4	4.8	7.6	13.1	22.5	16.3	27.9	19.6	33.7	5.90	11.80
4.830 x 3.250	2.0	3.5	3.5	5.5	4.2	6.6	5.0	7.8	13.5	23.2	16.8	28.8	20.3	34.7	5.82	11.64
4.950 x 3.300	2.1	3.7	3.4	5.5	4.2	6.6	4.9	7.9	13.6	23.4	16.8	29.0	20.3	35.0	6.19	12.38
5.030 x 3.350	2.1	3.7	3.6	5.7	4.3	6.9	5.1	8.2	14.0	24.1	17.4	29.9	21.0	36.1	6.10	12.20
5.180 x 3.400	2.2	3.8	3.6	5.8	4.3	6.9	5.1	8.2	14.1	24.4	17.5	30.3	21.1	36.5	6.45	12.90
5.230 x 3.450	2.2	3.8	3.7	5.9	4.5	7.1	5.3	8.5	14.5	25.0	18.0	31.0	21.7	37.4	6.40	12.80
5.310 x 3.510	2.1	3.8	3.8	6.1	4.6	7.4	5.5	8.8	14.9	25.7	18.5	32.0	22.3	38.5	6.30	12.60
5.460 x 3.560	2.2	3.9	3.9	6.2	4.7	7.5	5.6	8.9	15.1	26.2	18.8	32.5	22.6	39.2	6.62	13.24
5.510 x 3.610	2.2	3.9	4.0	6.4	4.8	7.7	5.7	9.1	15.5	26.8	19.2	33.3	23.2	40.2	6.55	13.10
5.660 x 3.660	2.3	4.1	4.0	6.5	4.8	7.8	5.7	9.2	15.6	27.1	19.4	33.7	23.4	40.6	6.92	13.84
5.720 x 3.710	2.3	4.1	4.1	6.6	5.0	8.0	5.9	9.5	16.1	27.9	19.9	34.6	24.0	41.7	6.82	13.64
5.870 x 3.760	2.4	4.2	4.2	6.7	5.0	8.1	6.0	9.6	16.2	28.2	20.1	35.0	24.3	42.2	7.19	14.38
5.940 x 3.810	2.4	4.2	4.3	6.9	5.2	8.4	6.2	9.9	16.7	29.0	20.7	36.0	25.0	43.4	7.09	14.18
5.990 x 3.860	2.3	4.2	4.4	7.1	5.3	8.6	6.3	10.2	17.0	29.6	21.2	36.8	25.5	44.3	7.02	14.04
6.070 x 3.910	2.3	4.1	4.5	7.3	5.5	8.8	6.5	10.5	17.5	30.3	21.7	37.6	26.2	45.4	6.90	13.80
6.220 x 3.960	2.4	4.3	4.6	7.4	5.5	8.9	6.6	10.6	17.6	30.7	21.9	38.2	26.4	46.0	7.29	14.58
6.270 x 4.010	2.4	4.3	4.7	7.5	5.7	9.1	6.7	10.8	18.0	31.3	22.4	38.9	27.0	46.9	7.20	14.40

NOTES:

① QUANTITIES ARE BASED ON A THICKNESS OF 600 mm AND ARE PROPORTIONED WHEN A DIFFERENT THICKNESS IS SPECIFIED.

② QUANTITIES ARE BASED ON NO. 3 FOUNDATION STABILIZATION WITH A WIDTH EQUAL TO (DIAMETER OR SPAN) + 1200 mm + (2 TIMES SHELL THICKNESS FOR CONCRETE OR 2 TIMES CORRUGATION WIDTH FOR METAL) AND A DEPTH EQUAL TO 600 mm PLUS "X". TO COMPUTE THE TOTAL BEDDING QUANTITY MULTIPLY BY (LENGTH OF PIPE MINUS 7.0 m).

SEE DTL. DWG. NO. 603-18 FOR DEFINITION OF NO. 3 FOUNDATION STABILIZATION AND "X" DIMENSION.

FOR PIPES WITH SKEW BEVEL ENDS - DIVIDE THE QUANTITIES SHOWN BY COSINE OF SKEW ANGLE.

ALL DIMENSIONS ARE MILLIMETERS (mm) UNLESS OTHERWISE NOTED.

DETAILED DRAWING

REFERENCE STANDARD SPEC. SECTION 552, 603, 613

DWG. NO. 552-06

CONCRETE, RIPRAP AND BEDDING MATERIAL QUANTIES FOR SING. AND DBL. CULVERT INSTALLATION

EFFECTIVE: FEBRUARY 2005

serving you with pride

MONTANA DEPARTMENT OF TRANSPORTATION

DIAMETER OR SPAN x RISE (mm OR m)	CUBIC METERS OF CLASS DD CONCRETE (EACH END)								CUBIC METERS OF RIPRAP① (EACH END) (DTL. DWG. NO. 613-14)						m³ BEDDING MATERIAL ② PER METER OF PIPE (DTL. DWG. NO. 603-18)	
	CUTOFF WALL (DTL. DWG. NO. 552-00)		CONCRETE EDGE PROTECTION (DTL. DWG. NO. 613-06)													
			1.5:1		2:1		2.5:1		1.5:1		2:1		2.5:1			
	SING.	DBL.	SING.	DBL.	SING.	DBL.	SING.	DBL.	SING.	DBL.	SING.	DBL.	SING.	DBL.	SING.	DBL.
CSP 75 mm x 25 mm OR 125 mm x 25 mm CORRUGATIONS																
1350	0.9	1.4	1.5	2.2	1.8	2.6	~	~	6.1	9.7	7.5	12.0	~	~	2.09	4.18
1500	0.9	1.5	1.6	2.4	2.0	2.9	~	~	6.5	10.4	8.1	13.0	~	~	2.27	4.54
1650	1.0	1.6	1.8	2.6	2.1	3.1	~	~	7.0	11.2	8.7	13.9	~	~	2.45	4.90
1800	1.0	1.7	1.9	2.8	2.3	3.4	~	~	7.4	12.0	9.2	14.9	~	~	2.63	5.26
1950	1.1	1.8	2.0	3.0	2.5	3.6	~	~	7.9	12.8	9.8	15.8	~	~	2.82	5.64
2100	1.1	1.9	2.2	3.2	2.6	3.9	~	~	8.4	13.6	10.4	16.8	~	~	3.01	6.02
2250	1.2	2.0	2.3	3.5	2.8	4.2	~	~	8.8	14.4	11.1	18.2	~	~	3.20	6.40
2400	1.3	2.2	2.5	3.7	3.0	4.4	~	~	9.5	15.5	11.7	19.2	~	~	3.40	6.80
2550	1.3	2.3	2.6	3.9	3.2	4.7	~	~	9.9	16.3	12.3	20.2	~	~	3.61	7.22
2700	1.4	2.4	2.7	4.1	3.3	5.0	~	~	10.4	17.1	12.9	21.2	~	~	3.82	7.64
2850	1.4	2.5	2.9	4.3	3.5	5.2	~	~	10.9	18.0	13.6	22.3	~	~	4.03	8.06
3000	1.5	2.6	3.0	4.6	3.7	5.5	~	~	11.4	18.8	14.2	23.3	~	~	4.25	8.50
SSPP 152 mm x 51 mm CORRUGATIONS																
3.205	1.6	2.7	3.3	4.9	4.0	6.0	~	~	12.2	20.1	15.1	24.9	~	~	4.52	9.04
3.360	1.6	2.9	3.4	5.2	4.2	6.3	~	~	12.7	21.0	15.8	26.1	~	~	4.75	9.50
3.515	1.7	3.0	3.6	5.4	4.3	6.6	~	~	13.3	22.0	16.5	27.2	~	~	4.99	9.98
3.670	1.8	3.1	3.7	5.7	4.5	6.9	~	~	13.8	22.9	17.1	28.4	~	~	5.23	10.46
3.825	1.8	3.2	3.9	5.9	4.7	7.2	~	~	14.4	23.9	17.8	29.6	~	~	5.48	10.96
3.980	1.9	3.4	4.1	6.2	4.9	7.5	~	~	14.9	24.8	18.5	30.8	~	~	5.73	11.46
4.135	2.0	3.5	4.2	6.4	5.1	7.8	~	~	15.5	25.8	19.2	32.0	~	~	5.99	11.98
4.290	2.1	3.6	4.4	6.7	5.3	8.1	~	~	16.1	26.8	20.0	33.3	~	~	6.25	12.50
4.445	2.1	3.8	4.6	7.0	5.5	8.5	~	~	16.7	27.8	20.7	34.5	~	~	6.52	13.04
4.600	2.2	3.9	4.7	7.2	5.8	8.8	~	~	17.3	28.9	21.4	35.8	~	~	6.79	13.58
4.755	2.3	4.0	4.9	7.5	6.0	9.1	~	~	17.8	29.9	22.1	37.1	~	~	7.06	14.12
4.910	2.3	4.2	5.1	7.8	6.2	9.5	~	~	18.4	30.9	22.9	38.4	~	~	7.34	14.68
5.065	2.4	4.3	5.2	8.1	6.4	9.8	~	~	19.0	32.0	23.6	39.7	~	~	7.63	15.26
5.220	2.5	4.5	5.4	8.4	6.6	10.1	~	~	19.7	33.1	24.4	41.0	~	~	7.92	15.84
5.375	2.6	4.6	5.6	8.6	6.8	10.5	~	~	20.3	34.2	25.2	42.4	~	~	8.21	16.42
5.530	2.7	4.8	5.8	8.9	7.0	10.8	~	~	20.9	35.3	25.9	43.7	~	~	8.51	17.02
5.685	2.7	4.9	5.9	9.2	7.2	11.2	~	~	21.5	36.4	26.7	45.1	~	~	8.82	17.64
5.840	2.8	5.1	6.1	9.5	7.5	11.6	~	~	22.2	37.5	27.5	46.5	~	~	9.13	18.26
5.995	2.9	5.2	6.3	9.8	7.7	11.9	~	~	22.8	38.6	28.3	47.9	~	~	9.44	18.88
6.150	3.0	5.4	6.5	10.1	7.9	12.3	~	~	23.5	39.8	29.1	49.3	~	~	9.76	19.52
6.305	3.1	5.5	6.7	10.4	8.1	12.7	~	~	24.1	40.9	29.9	50.8	~	~	10.08	20.16
6.460	3.1	5.7	6.9	10.7	8.4	13.0	~	~	24.8	42.1	30.7	52.2	~	~	10.41	20.82
CSPA 68 mm x 13 mm CORRUGATIONS																
1440 x 970	0.9	1.4	1.2	1.7	1.4	2.0	~	~	5.1	8.2	6.3	10.2	~	~	2.05	4.10
1620 x 1100	0.9	1.5	1.3	1.9	1.5	2.3	~	~	5.5	8.9	6.8	11.0	~	~	2.23	4.46
1800 x 1200	1.0	1.6	1.4	2.0	1.6	2.4	~	~	5.8	9.5	7.2	11.8	~	~	2.42	4.84
1950 x 1320	1.0	1.7	1.5	2.2	1.7	2.6	~	~	6.2	10.1	7.7	12.5	~	~	2.58	5.16
2100 x 1450	1.1	1.8	1.6	2.4	1.9	2.8	~	~	6.6	10.8	8.1	13.4	~	~	2.74	5.48
CSPA 75 mm x 25 mm CORRUGATIONS																
1010 x 790	0.8	1.3	0.9	1.4	1.1	1.6	~	~	4.2	6.7	5.3	8.4	~	~	1.78	3.56
1160 x 920	0.8	1.4	1.0	1.5	1.2	1.8	~	~	4.5	7.2	5.6	9.0	~	~	1.98	3.96
1340 x 1050	0.9	1.5	1.2	1.7	1.4	2.1	~	~	5.0	8.1	6.3	10.1	~	~	2.15	4.30
1520 x 1170	1.0	1.6	1.2	1.9	1.5	2.2	~	~	5.3	8.6	6.6	10.7	~	~	2.38	4.76
1670 x 1300	1.0	1.7	1.4	2.0	1.6	2.4	~	~	5.8	9.4	7.2	11.7	~	~	2.59	5.18
1850 x 1400	1.1	1.8	1.4	2.2	1.7	2.6	~	~	6.1	9.9	7.5	12.3	~	~	2.81	5.62
2050 x 1500	1.1	1.9	1.6	2.4	1.9	2.9	~	~	6.6	10.9	8.2	13.5	~	~	2.86	5.72
2200 x 1620	1.2	2.0	1.7	2.6	2.0	3.1	~	~	7.0	11.6	8.7	14.4	~	~	3.07	6.14
2400 x 1720	1.2	2.1	1.8	2.7	2.2	3.3	~	~	7.4	12.2	9.2	15.2	~	~	3.27	6.54
2600 x 1820	1.3	2.2	1.9	2.9	2.3	3.5	~	~	7.8	12.9	9.7	16.1	~	~	3.50	7.00
2840 x 1920	1.4	2.4	2.0	3.1	2.4	3.7	~	~	8.2	13.6	10.1	16.9	~	~	3.72	7.44
2970 x 2020	1.5	2.5	2.1	3.3	2.5	3.9	~	~	8.6	14.3	10.6	17.8	~	~	3.94	7.88
3240 x 2120	1.5	2.6	2.2	3.4	2.7	4.1	~	~	9.0	15.0	11.1	18.7	~	~	4.16	8.32
3470 x 2220	1.6	2.7	2.3	3.6	2.8	4.3	~	~	9.4	15.8	11.6	19.6	~	~	4.38	8.76
3600 x 2320	1.7	2.9	2.4	3.8	2.9	4.6	~	~	9.8	16.5	12.1	20.5	~	~	4.62	9.24

NOTES:

① QUANTITIES ARE BASED ON A THICKNESS OF 600 mm AND ARE PROPORTIONED WHEN A DIFFERENT THICKNESS IS SPECIFIED.

② QUANTITIES ARE BASED ON NO. 3 FOUNDATION STABILIZATION WITH A WIDTH EQUAL TO (DIAMETER OR SPAN) + 1200 mm + (2 TIMES SHELL THICKNESS FOR CONCRETE OR 2 TIMES CORRUGATION WIDTH FOR METAL) AND A DEPTH EQUALTO 600 mm PLUS "X". TO COMPUTE THE TOTAL BEDDING QUANTITY MULTIPLY BY (LENGTH OF PIPE MINUS 7.0 m).

SEE DTL. DWG. NO. 603-18 FOR DEFINITION OF NO. 3 FOUNDATION STABILIZATION AND "X" DIMENSION.

FOR PIPES WITH SKEW BEVEL ENDS - DIVIDE THE QUANTITIES SHOWN BY COSINE OF SKEW ANGLE.

ALL DIMENSIONS ARE MILLIMETERS (mm) UNLESS OTHERWISE NOTED.

DETAILED DRAWING

REFERENCE STANDARD SPEC. SECTION 552, 603, 613

DWG. NO. 552-08

CONCRETE, RIPRAP AND BEDDING MATERIAL QUANTITIES FOR SING. AND DBL. CULVERT INSTALLATION

EFFECTIVE: FEBRUARY 2005

serving you with pride

MONTANA DEPARTMENT OF TRANSPORTATION

CONNECTIONS

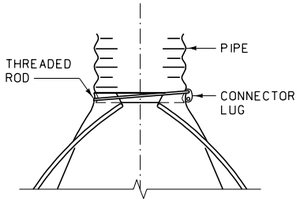

TYPE 1

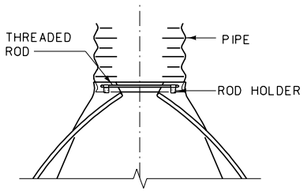

TYPE 2

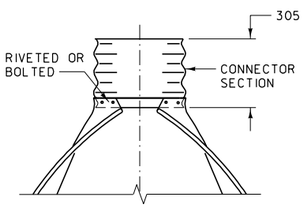

TYPE 3

ARCH PIPE

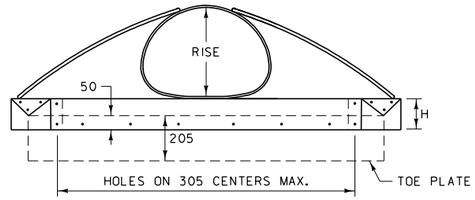

ELEVATION

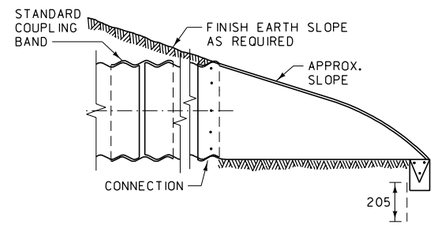

TYPICAL CROSS-SECTION
(ILLUSTRATED WITH TYPE 3 CONNECTION)

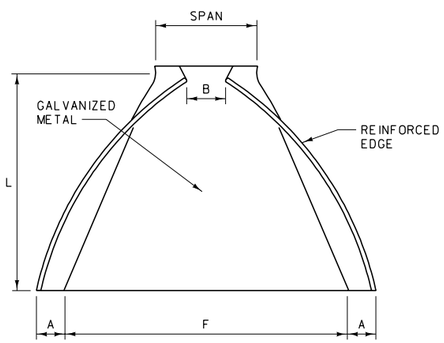

PLAN

ROUND PIPE

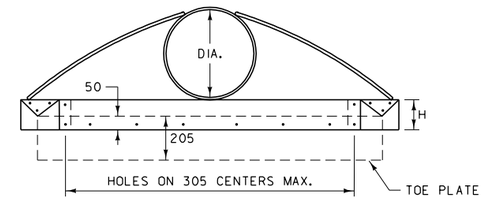

ELEVATION

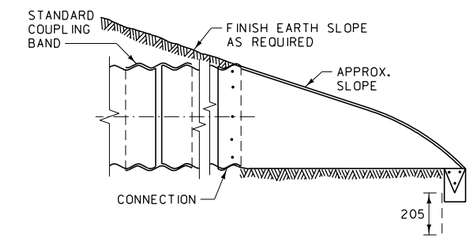

TYPICAL CROSS-SECTION
(ILLUSTRATED WITH TYPE 3 CONNECTION)

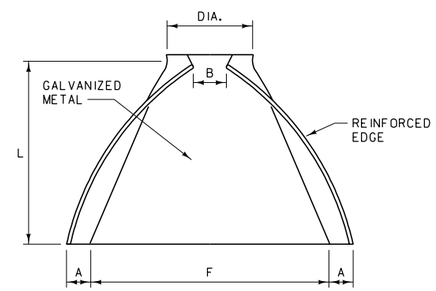

PLAN

SPAN x RISE	MINIMUM THICKNESS *	DIMENSIONS					APPROX. SLOPE	TYPE CONNECTOR
		A 25 TOL.	B MAX.	H 25 TOL.	L 40 TOL.	F 50 TOL.		
68 x 13 CORRUGATIONS								
430 x 330	1.63	130	230	150	510	710	2.13:1	2
530 x 380	1.63	150	280	150	610	860	2:1	2
610 x 460	1.63	180	300	150	710	1020	2.13:1	2
710 x 510	1.63	180	410	150	810	1170	2:1	2
885 x 610	2.01	230	410	150	990	1470	1.88:1	2
1060 x 740	2.01	280	460	180	1170	1850	1.88:1	3
1240 x 840	2.77	300	530	230	1350	2080	1.75:1	3
1440 x 970	2.77	410	660	300	1570	2240	1.88:1	3
1620 x 1100	2.77	430	760	300	1750	2540	1.88:1	3
1800 x 1200	2.77	430	910	300	1960	2840	1.88:1	3
1950 x 1320	2.77	430	910	300	1960	3150	1.63:1	3
2100 x 1450	2.77	430	1120	300	1960	3300	1.5:1	3
75 x 25 CORRUGATIONS								
1340 x 1050	2.77	430	660	300	1600	2240	1.75:1	3
1520 x 1170	2.77	430	910	300	1780	2540	1.88:1	3
1670 x 1300	2.77	430	910	300	1960	2840	1.75:1	3
1850 x 1400	2.77	430	910	300	1960	3150	1.5:1	3
2050 x 1500	2.77	430	1120	300	1960	3450	1.63:1	3

PIPE DIA.	MINIMUM THICKNESS *	DIMENSIONS					APPROX. SLOPE	TYPE CONNECTOR
		A 25 TOL.	B MAX.	H 25 TOL.	L 40 TOL.	F 50 TOL.		
300	1.63	125	180	150	535	560	2.25:1	1
375	1.63	150	205	150	660	710	2.25:1	1
450	1.63	180	255	150	785	865	2.13:1	1
525	1.63	205	305	150	915	1015	2.13:1	1
600	1.63	230	330	150	1040	1170	2.13:1	1
750	2.01	280	405	205	1295	1395	2.13:1	2
900	2.01	330	485	230	1525	1780	2:1	2
1050	2.77	380	635	255	1755	2085	2.13:1	3
1200	2.77	430	735	305	1980	2235	2:1	3
1350	2.77	430	840	305	2135	2540	2:1	3
1500	2.77	430	915	305	2210	2845	1.88:1	3
1650	2.77	430	990	305	2210	2995	1.63:1	3
1800	2.77	430	1120	305	2210	3050	1.5:1	3
1950	2.77	430	1220	305	2210	3300	1.38:1	3
2100	2.77	430	1320	305	2210	3455	1.33:1	3

NOTES:

PROVIDE TOE PLATE WHEN SPECIFIED.

GALVANIZE ALL PARTS IN ACCORDANCE WITH AASHTO M 36M.

PAINT ANY AREAS WHERE GALVANIZING IS BROKEN OR METAL IS BARE WITH ONE COAT OF ZINC CHROMATE PRIME AND TWO COATS OF ALUMINUM PAINT.

MINOR VARIATIONS IN DESIGN MAY BE ACCEPTABLE ON APPROVAL OF THE ENGINEER.

SEAMS OR JOINTS LENGTHWISE OF THE APRON ARE ACCEPTABLE IF SECURELY BOLTED OR WELDED AND PAINTED AS PROVIDED ABOVE.

* THICKNESSES SHOWN ARE FOR STEEL CULVERTS.
FOR THICKNESS OF ALUMINUM, SUBTRACT 0.10 mm.

ALL DIMENSIONS ARE MILLIMETERS (mm) UNLESS OTHERWISE NOTED.

DETAILED DRAWING

REFERENCE STANDARD SPEC. SECTION 603, 709

DWG. NO. 603-02

CMP FLARED END TERMINAL SECTION (FETS)

EFFECTIVE: FEBRUARY 2005

MDT serving you with pride — MONTANA DEPARTMENT OF TRANSPORTATION

TYPE "A"

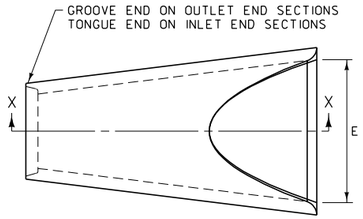

PLAN

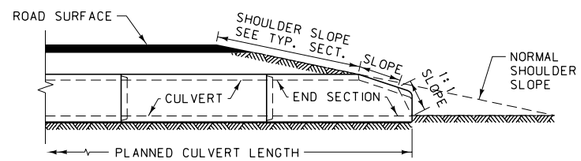

SLOPE DETAIL

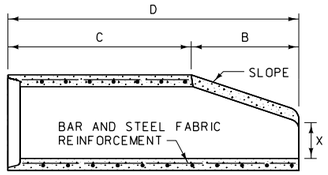

SECTION X-X

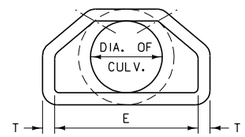

END VIEW

TYPE "B"

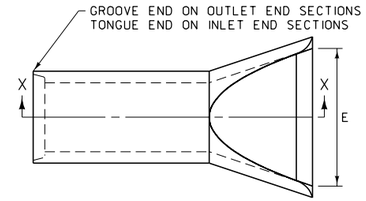

PLAN

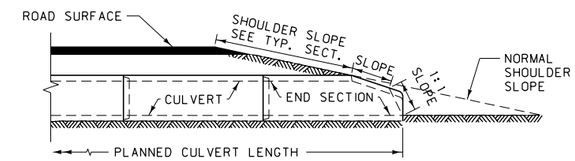

SLOPE DETAIL

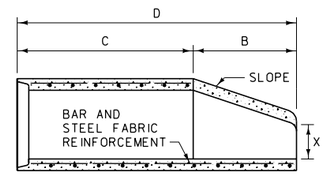

SECTION X-X

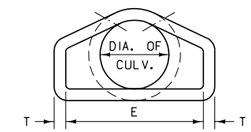

END VIEW

TYPE "A"							
DIA.	SLOPE	X	B	C	D	E	T *
300	2.4:1	101.6	609.6	1219.2	1828.8	609.6	50.8
375	2.4:1	152.4	685.8	1143.0	1828.8	762.0	57.2
450	2.3:1	228.6	685.8	1143.0	1828.8	914.4	63.5
600	2.5:1	241.3	1104.9	723.9	1828.8	1219.2	76.2
750	2.5:1	304.8	1371.6	457.2	1828.8	1524.0	88.9
900	2.5:1	381.0	1600.2	889.0	2489.2	1828.8	101.6
1050	2.5:1	533.4	1600.2	889.0	2489.2	1981.2	114.3
1200	2.5:1	609.6	1828.8	660.4	2489.2	2133.6	127.0
1350	2.0:1	685.8	1651.0	850.9	2501.9	2286.0	139.7

* WALL "B" THICKNESS

TOLERANCES IN THE ADJACENT TABLES MAY NOT VARY MORE THAN ±1.5% FOR THE DIMENSIONS SHOWN. OTHERWISE THEY MUST CONFORM TO AASHTO M 170M.

TYPE "B"							
DIA.	SLOPE	X	B	C	D	E	T *
300	2.4:1	101.6	609.6	1219.2	1828.8	609.6	50.8
375	2.4:1	152.4	685.8	1143.0	1828.8	762.0	57.2
450	2.3:1	228.6	685.8	1143.0	1828.8	914.4	63.5
600	2.5:1	241.3	1104.9	723.9	1828.8	1219.2	76.2
750	2.5:1	304.8	1371.6	457.2	1828.8	1524.0	88.9
900	2.5:1	381.0	1600.2	889.0	2489.2	1828.8	101.6
1050	2.5:1	533.4	1600.2	889.0	2489.2	1981.2	114.3
1200	2.5:1	609.6	1828.8	660.4	2489.2	2133.6	127.0
1350	2.0:1	685.8	1651.0	850.9	2501.9	2286.0	139.7

* WALL "B" THICKNESS

LARGE DIAMETER PIPE

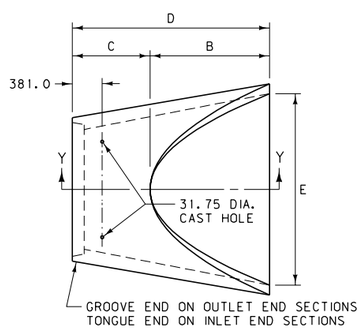

PLAN

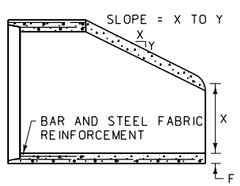

SECTION Y-Y

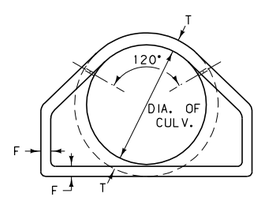

END VIEW

LARGE DIAMETER CULVERT								
DIA.	SLOPE	T *	X	B	C	D	E	F
1500	1.9:1	152.4	889.0	1524.0	990.6	2514.6	2438.4	127.0
1650	1.7:1	165.1	762.0	1828.8	685.8	2514.6	2590.8	139.7
1800	1.9:1	177.8	914.4	1981.2	533.4	2514.6	2743.2	152.4
1950	1.8:1	190.5	914.4	2286.0	533.4	2819.4	2895.6	165.1
2100	1.5:1	203.2	914.4	2298.7	533.4	2832.1	3048.0	165.1
2250	1.5:1	215.9	1041.4	2222.5	609.6	2832.1	3352.8	165.1

* WALL "B" THICKNESS

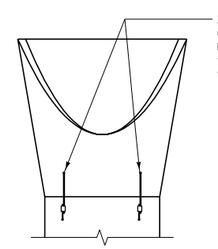

TIE BOLT CONNECTION

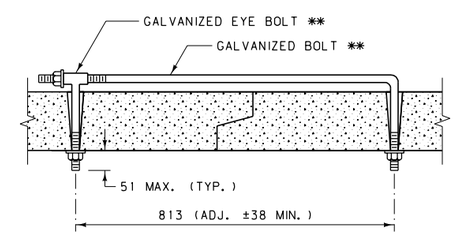

** M20 FOR 300 TO 1350 DIA. RCP
M24 FOR 1500 TO 2100 DIA. RCP

TIE BOLT DETAIL
(TWO PER END SECTION)

ALL DIMENSIONS ARE MILLIMETERS (mm) UNLESS OTHERWISE NOTED.

TIE BOLTS: USE TWO TIE BOLTS ON ALL FLARED END SECTIONS, ONE ON EACH SIDE AT 60° TO THE VERTICAL. GALVANIZE ALL PARTS. SEE TIE BOLT DETAIL.

CONSTRUCTION: CONSTRUCT ACCORDING TO CLASS III, AASHTO M 170M, AS FAR AS DESIGN WILL PERMIT.

DETAILED DRAWING

REFERENCE STANDARD SPEC. SECTION 603,708

DWG. NO. 603-08

PREFABRICATED RCP FLARED END TERMINAL SECTION (FETS)

EFFECTIVE: FEBRUARY 2005

MDT serving you with pride — MONTANA DEPARTMENT OF TRANSPORTATION

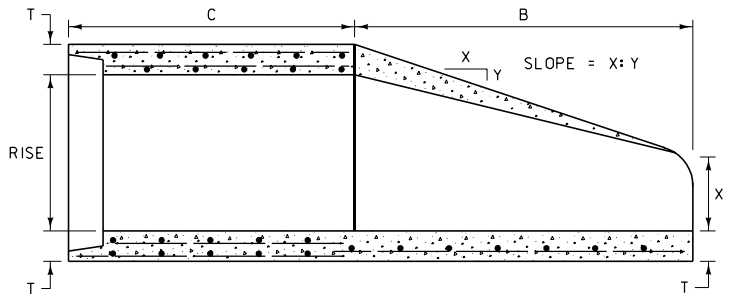

LONGITUDINAL SECTION

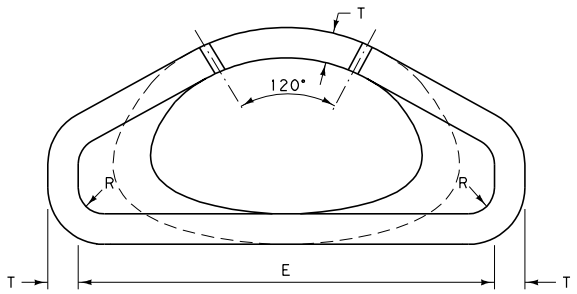

END VIEW

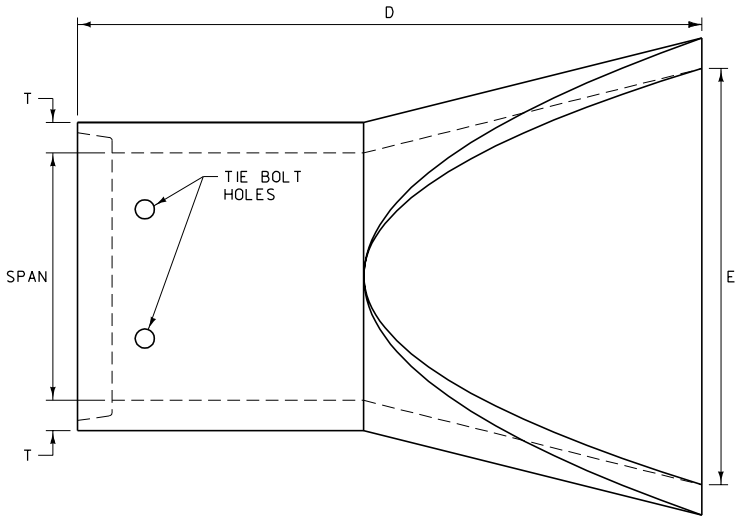

PLAN VIEW

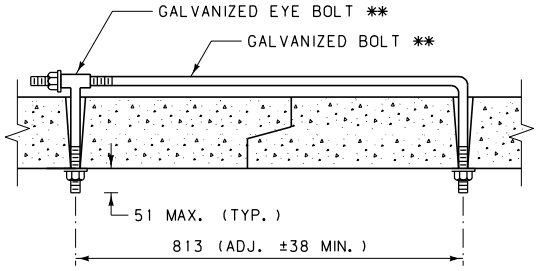

** M20 FOR 560 x 345 TO
1650 x 1015 RCPA

M24 FOR 1855 x 1145 TO
2235 x 1370 RCPA

TIE BOLT DETAIL

(TWO PER END SECTION)

TIE BOLTS: USE TIE BOLTS ON ALL FLARED END SECTIONS, ONE ON EACH SIDE AT 60° TO THE VERTICAL. GALVANIZE ALL PARTS. SEE TIE BOLT DETAIL.

CONSTRUCTION: CONSTRUCT ACCORDING TO CLASS A-III, AASHTO M 206M, AS FAR AS DESIGN WILL PERMIT.

EQUIV. SIZE	SPAN	RISE	T *	X	B	C	D	E	R	SLOPE
450	560	345	63.5	177.8	685.8	1143.0	1828.8	914.4	76.2	3:1
600	725	460	88.9	215.9	990.6	838.2	1828.8	1219.2	76.2	3:1
750	920	570	101.6	241.3	1270.0	1168.4	2438.4	1524.0	76.2	3:1
900	1110	675	114.3	282.6	1524.0	914.4	2438.4	1828.8	152.4	3:1
1050	1300	795	114.3	401.6	1524.0	914.4	2438.4	1981.2	152.4	3:1
1200	1485	915	127.0	533.4	1524.0	914.4	2438.4	2133.6	152.4	3:1
1350	1650	1015	139.7	647.7	1524.0	914.4	2438.4	2286.0	152.4	3:1
1500	1855	1145	152.4	787.4	1524.0	914.4	2438.4	2438.4	152.4	3:1
1800	2235	1370	177.8	787.4	1524.0	914.4	2438.4	3048.0	152.4	2:1
2100	2590	1575	203.2	546.1	2133.6	609.6	2743.2	3657.6	152.4	2:1

* WALL "B" THICKNESS

ALL DIMENSIONS ARE MILLIMETERS (mm) UNLESS OTHERWISE NOTED.

DETAILED DRAWING

REFERENCE
STANDARD SPEC.
SECTION 603

DWG. NO.
603-10

PREFABRICATED RCP ARCH
FLARED END TERMINAL
SECTION (FETS)

EFFECTIVE: FEBRUARY 2005

MDT serving you with pride

MONTANA DEPARTMENT OF TRANSPORTATION

ROAD APPROACH CULVERT END TREATMENT										
QUANTITIES (FOR ESTIMATING ONLY)										
DIA. A RCP	H PIPE LENGTH	M12 x 105 FERRULE LOOP INSERT, EACH	LENGTH 63 DIA. SCHEDULE 40 GALV. PIPE	DIMENSIONS						
				B	C	D	E	G	R	J
375	1448	~	~	~	~	210	82	1219	76	229
450	1981	~	~	~	~	216	76	1752	76	229
600	3048	10	3800	152	610	229	64	2819	76	229

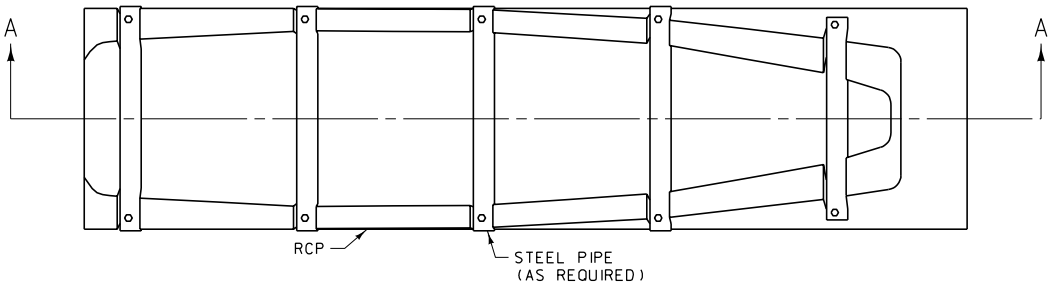

PLAN VIEW

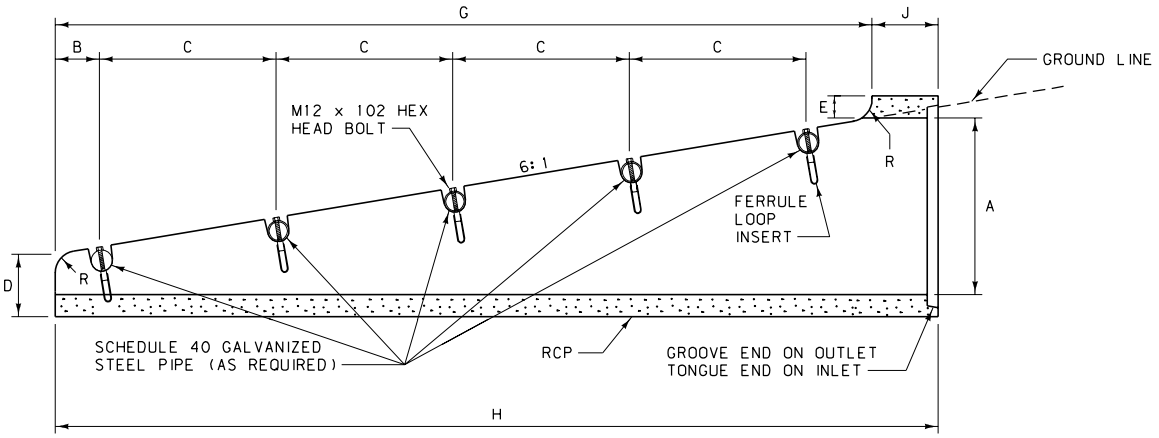

SECTION A-A

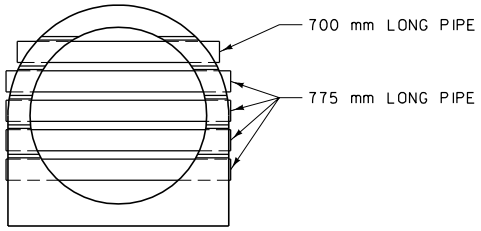

END VIEW

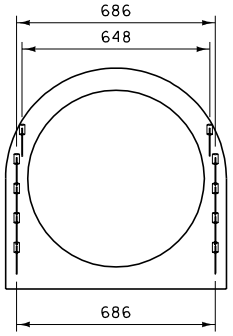

VIEW OF INSERTS

NOTE:
PAINT ALL NON-GALVANIZED PARTS IN ACCORDANCE WITH SECTION 710 OF THE STANDARD SPECIFICATIONS.

ALL DIMENSIONS ARE MILLIMETERS (mm) UNLESS OTHERWISE NOTED.

DETAILED DRAWING	
REFERENCE STANDARD SPEC. SECTION 603, 710	DWG. NO. 603-12
RCP ROAD APPROACH CULVERT END TREATMENT (RACET)	
EFFECTIVE: FEBRUARY 2005	
serving you with pride	MONTANA DEPARTMENT OF TRANSPORTATION

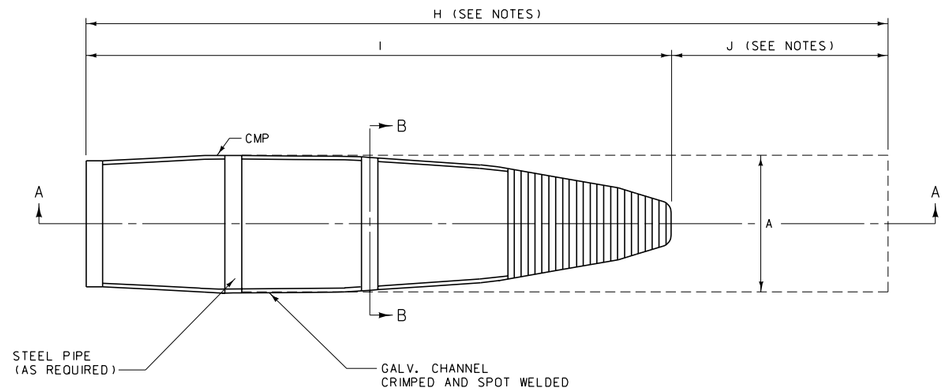

PLAN VIEW

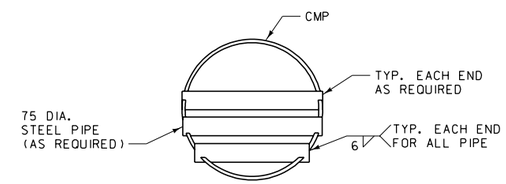

END VIEW

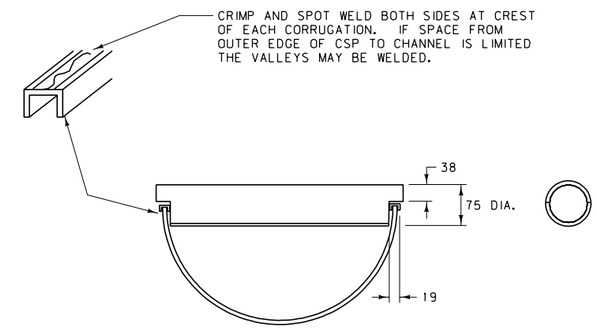

SECTION B-B

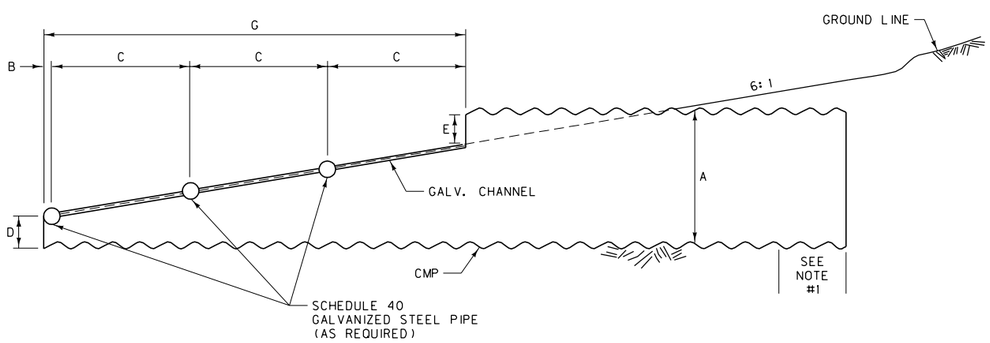

SECTION A-A

ILLUSTRATED WITH 600 mm
CMP (750 mm CMP UTILIZES
FOUR GALV. STEEL PIPES)

ROAD APPROACH CULVERT END TREATMENT

QUANTITIES (FOR ESTIMATING ONLY)

DIA. A CMP	H PIPE LENGTH	19 x 10 x 3.2 GALV. CHANNEL	LENGTH 75 DIA. SCHEDULE 40 GALV. PIPE	DIMENSIONS						
				B	C	D	E	G	I	J
375	2134	3048	~	~	~	61	61	1524	1829	305
450	2438	3048	~	~	~	101	101	1524	2133	305
600	3048	3656	1800	46	594	152	152	1828	2743	305
750	3810	4874	3000	61	594	183	183	2437	3505	305

NOTES:

1) PIPE TO HAVE ANNULAR CORRUGATION OR REROLLED ENDS. USE ONLY APPROVED COUPLING BAND PER STANDARD SPECIFICATION 709.02 CMP. FOR RCP END TREATMENT, SEE DTL. DWG. NO. 603-26 FOR CONNECTION.

2) THE TWO 19 mm CHANNELS MAY BE ELIMINATED FROM THE CULVERT END TREATMENT IF:

   A. THE CULVERT IS FABRICATED WITH 12 GAGE (2.8 mm THICK) MATERIAL.

   B. HALF CIRCLE NOTCHES ARE CUT IN THE CULVERT FOR THE STEEL PIPE WITH CONTINUOUS WELD OF THE PERIPHERY IN CONTACT PROVIDED.

   C. ALL WELDS AND OTHER NON-GALVANIZED PARTS ARE PAINTED IN ACCORDANCE WITH STANDARD SPECIFICATIONS SECTION 710.

3) CONNECTIONS MADE PER DTL. DWG. NO. 603-26 REQUIRE PIPE LENGTHS H AND J TO BE INCREASED BY 76 mm.

ALL DIMENSIONS ARE MILLIMETERS (mm) UNLESS OTHERWISE NOTED.

DETAILED DRAWING

REFERENCE
STANDARD SPEC.
SECTION 603, 709, 710

DWG. NO.
603-14

CMP ROAD APPROACH
CULVERT END TREATMENT
(RACET)

EFFECTIVE: FEBRUARY 2005

serving you with pride

MONTANA DEPARTMENT OF TRANSPORTATION

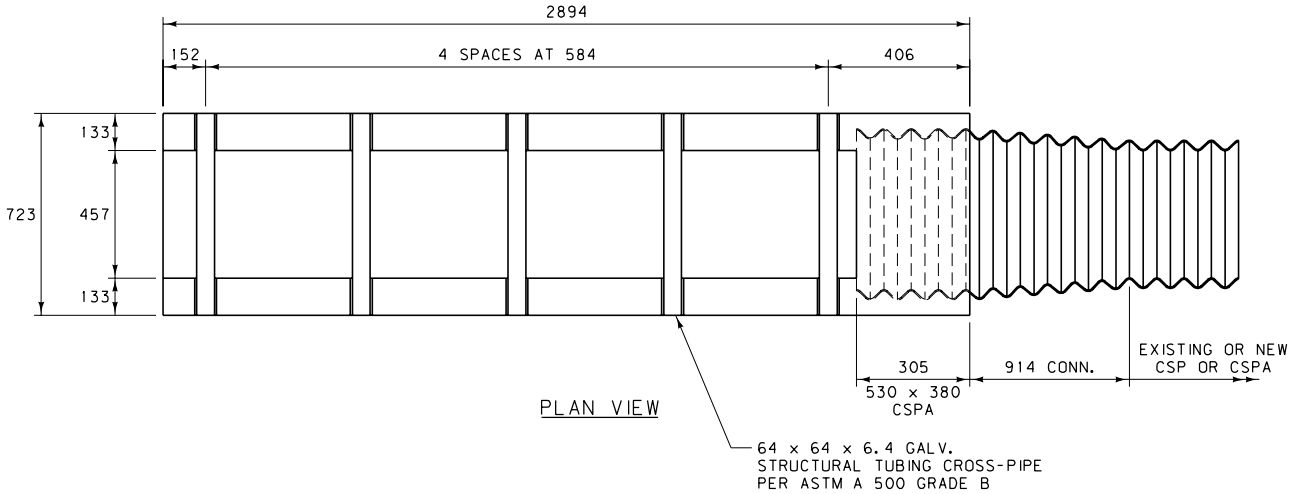

PLAN VIEW

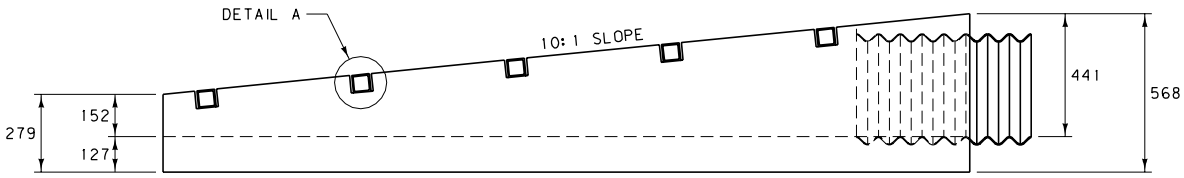

ELEVATION

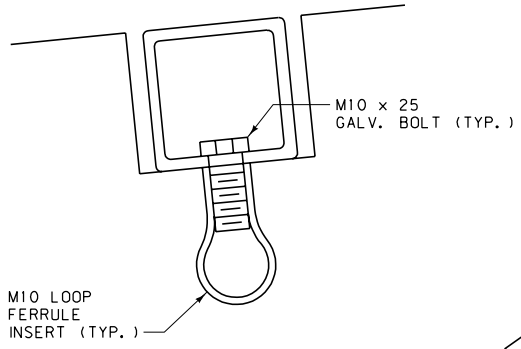

DETAIL A

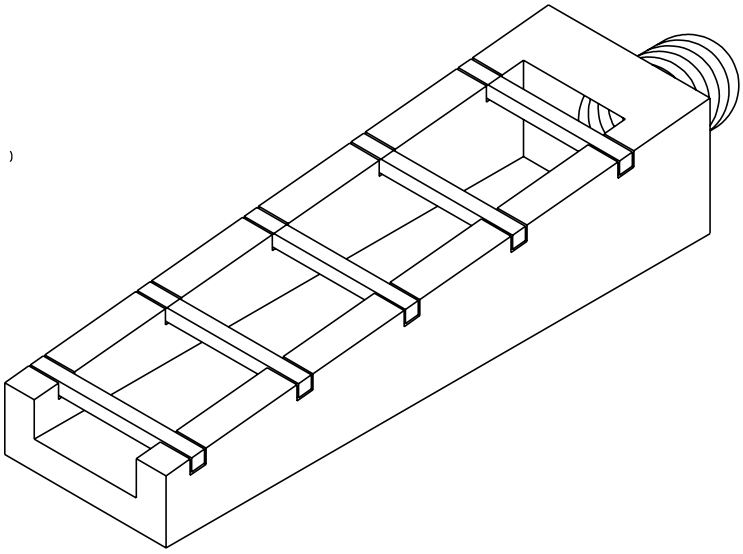

ALL DIMENSIONS ARE MILLIMETERS (mm) UNLESS OTHERWISE NOTED.

NOTE:
PAINT ALL EXPOSED METAL PARTS WITH ONE COAT OF ZINC RICH PAINT AND TWO COATS OF ALUMINUM PAINT ACCORDING TO STANDARD SPECIFICATION SECTION 710.

DETAILED DRAWING	
REFERENCE STANDARD SPEC. SECTION 603, 708, 710	DWG. NO. 603-17
PRECAST MEDIAN U-TURN CROSS DRAIN AND CONC. BEVELED END	
EFFECTIVE: FEBRUARY 2005	
serving you with pride	MONTANA DEPARTMENT OF TRANSPORTATION

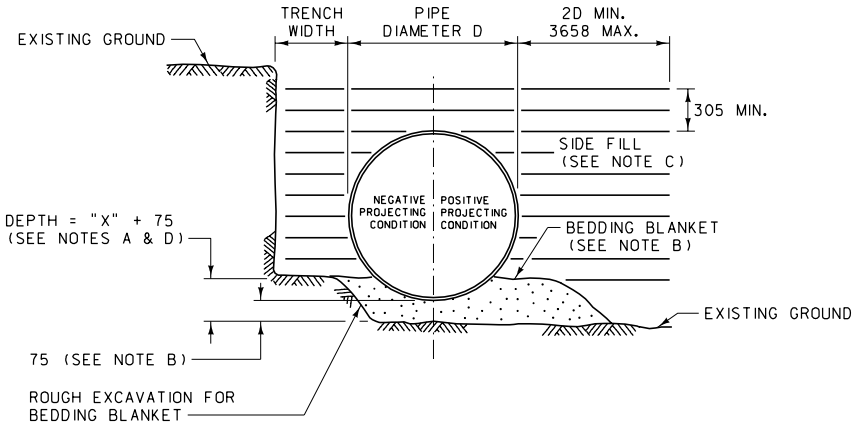

1- PIPE INSTALLATION AND BEDDING

(CLASS C, MODIFIED)

NOTE: THE PROJECTION RATIO FOR POSITIVE EMBANKMENT INSTALLATIONS EQUALS THE VERTICAL DISTANCE BETWEEN THE TOP OF THE PIPE AND THE NATURAL GROUND SURFACE DIVIDED BY THE OUTSIDE VERTICAL HEIGHT OF THE PIPE.

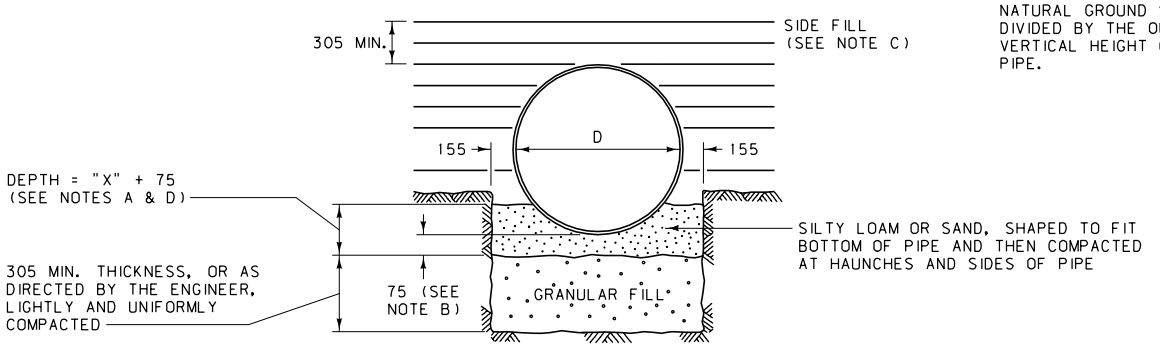

2-ROCK

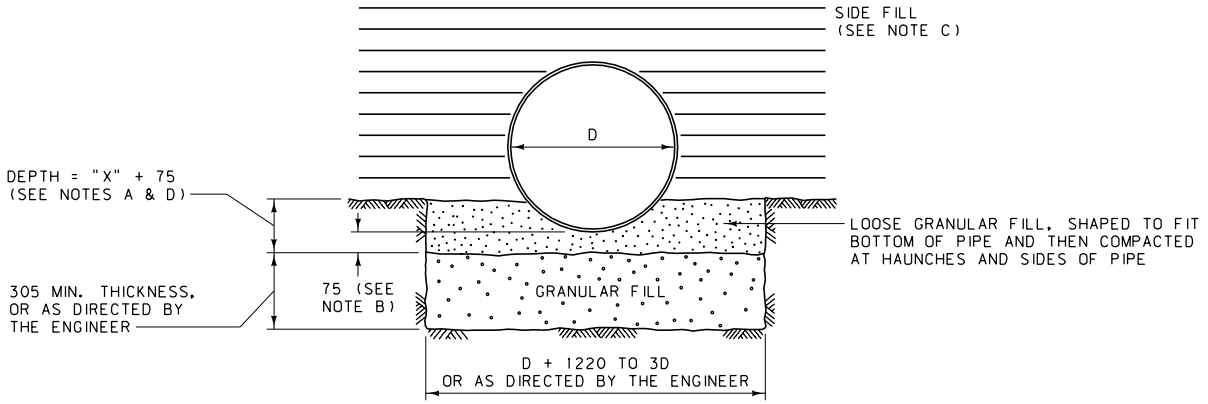

3-FOUNDATION STABILIZATION

NOTES:

(A) FOR STRUCTURAL PLATE PIPE, THE LENGTH OF BEDDING ARC NEED NOT EXCEED WIDTH OF BOTTOM PLATE.

(B) SHAPE BEDDING BLANKET OF SILTY LOAM OR SAND TO FIT BOTTOM OF PIPE. THE MINIMUM THICKNESS BEFORE PLACING PIPE IS 75 mm.

(C) COMPACT SIDE FILL IN 155 mm LAYERS TO DENSITY SPECIFIED FOR ADJACENT EMBANKMENT. SEE SECTION 203.03.3 OF THE STANDARD SPECIFICATIONS FOR THE DENSITY REQUIREMENTS.

(D) SEE DTL. DWG. NO. 603-32 AND 603-34 FOR "X" DIMENSIONS.

ALL DIMENSIONS ARE MILLIMETERS (mm) UNLESS OTHERWISE NOTED.

DETAILED DRAWING	
REFERENCE STANDARD SPEC. SECTION 207, 603, 701	DWG. NO. 603-18
CSP AND SSPP CULVERT BEDDING	
EFFECTIVE: FEBRUARY 2005	
serving you with pride	MONTANA DEPARTMENT OF TRANSPORTATION

TYPES OF TRENCH BEDDING

NOTE: THE PROJECTION RATIO (P) FOR POSITIVE EMBANKMENT INSTALLATIONS EQUALS THE VERTICAL DISTANCE BETWEEN THE TOP OF THE PIPE AND THE NATURAL GROUND SURFACE DIVIDED BY THE OUTSIDE VERTICAL HEIGHT OF THE PIPE.

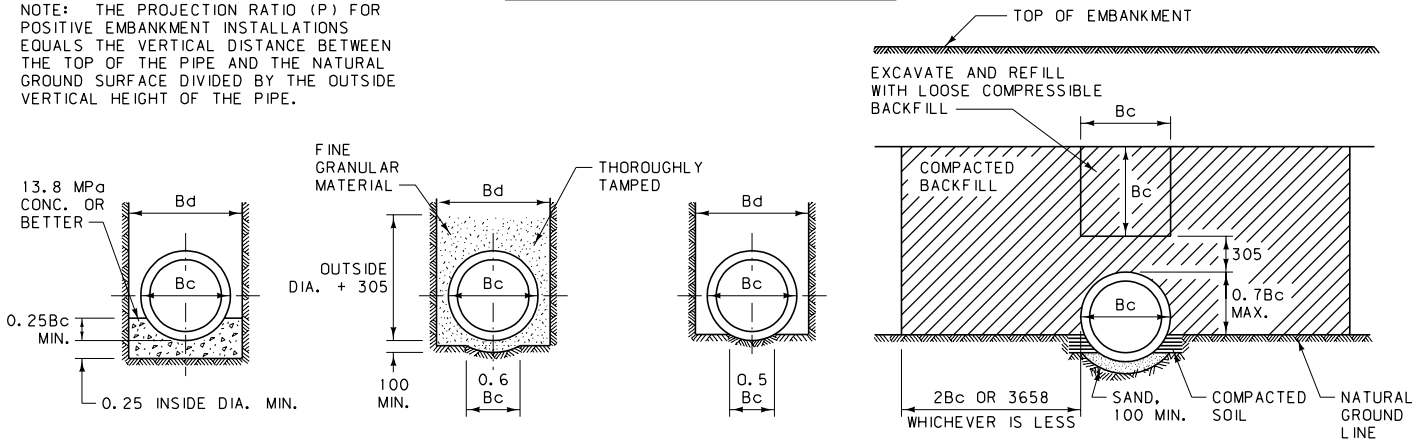

CLASS A
LOAD FACTOR = 3.0

CLASS B
LOAD FACTOR = 1.9

CLASS C
LOAD FACTOR = 1.5

CLASS B-1

TYPES OF EMBANKMENT BEDDING

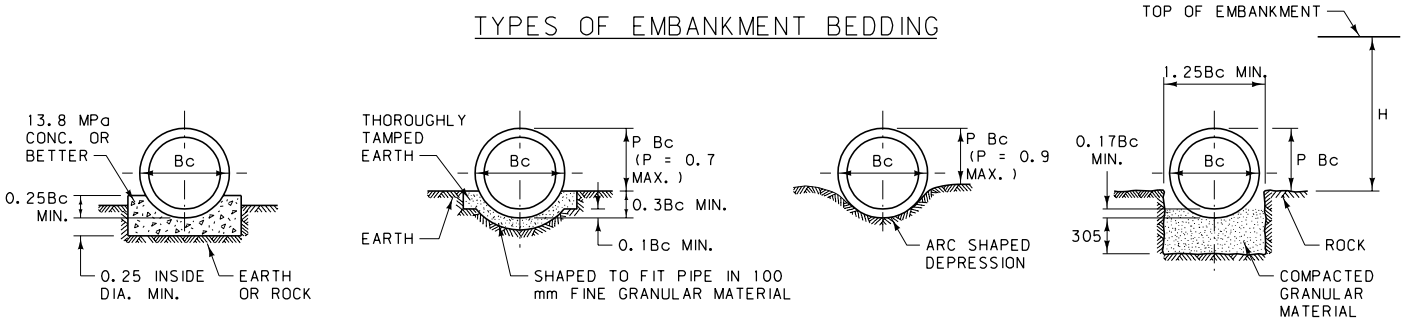

CLASS A

CLASS B

CLASS C

DESCRIPTION OF BEDDING CLASSES

CLASS A CONCRETE CRADLE BEDDING.

THE LOWER PART OF THE PIPE EXTERIOR IS BEDDED IN A CONTINUOUS CRADLE CONSTRUCTED OF 13.8 MPa CONCRETE OR BETTER, HAVING A MINIMUM THICKNESS UNDER THE PIPE OF ONE-FOURTH THE NOMINAL INSIDE DIAMETER AND EXTENDING UP THE SIDES OF THE PIPE FOR A HEIGHT EQUAL TO ONE-FOURTH OF THE OUTSIDE DIAMETER. THE CRADLE HAS A MINIMUM WIDTH EQUAL TO THE OUTSIDE DIAMETER OF THE PIPE PLUS 205 mm, AND IS CONSTRUCTED MONOLITHICALLY WITHOUT HORIZONTAL CONSTRUCTION JOINTS.

CLASS B BEDDING

(1) THIS CLASS OF BEDDING FOR EMBANKMENT CONDITIONS IS APPLICABLE ONLY WHEN THE PROJECTION RATIO IS 0.7 AND LESS. THE PIPE IS BEDDED CAREFULLY ON FINE GRANULAR MATERIALS OVER AN EARTH FOUNDATION, ACCURATELY SHAPED BY MEANS OF A TEMPLATE TO FIT THE LOWER PART OF THE PIPE EXTERIOR FOR AT LEAST 10% OF THE CULVERT OVERALL HEIGHT. THEN COMPACTABLE SOIL MATERIAL IS RAMMED AND TAMPED IN LAYERS NOT MORE THAN 155 mm THICK AROUND THE PIPE FOR THE REMAINDER OF THE LOWER 20% OF ITS HEIGHT. BACK-FILLING IS COMPLETED TO THE TOP OF THE PIPE, CONFORMING WITH THE APPLICABLE PROVISIONS OF THE STANDARD SPECIFICATIONS.

(2) FOR TRENCH CONDITIONS, THE CULVERT IS PLACED AS DESCRIBED IN B(1) EXCEPT THAT THE EARTH FOUNDATION IS SHAPED TO FIT THE LOWER PART OF THE CULVERT EXTERIOR FOR A WIDTH OF AT LEAST 60% OF THE CULVERT BREADTH. THEN THE REMAINDER OF THE CULVERT IS ENTIRELY SURROUNDED TO A HEIGHT OF AT LEAST 305 mm ABOVE ITS TOP WITH GRANULAR MATERIAL PLACED BY HAND TO FILL ALL SPACES UNDER AND ADJACENT TO THE CULVERT. THE FILL IS TAMPED THOROUGHLY ON EACH SIDE AND UNDER THE CULVERT AS FAR AS PRACTICAL IN LAYERS NOT TO EXCEED 155 mm IN THICKNESS.

CLASS B-1 BEDDING

IN THIS TYPE OF INSTALLATION, SOMETIMES CALLED THE IMPERFECT TRENCH METHOD, THE PIPE CULVERT IS FIRST INSTALLED IN ACCORDANCE WITH THE REQUIREMENTS OF B(2). THEN THE FILL IS COMPACTED AT EACH SIDE OF THE PIPE FOR A LATERAL DISTANCE EQUAL TO TWICE THE OUTSIDE DIAMETER OR 3660 mm, WHICHEVER IS LESS, AND CARRIED UP TO AN ELEVATION ABOVE THE TOP OF THE PIPE EQUAL TO THE OUTSIDE DIAMETER OF THE PIPE PLUS 305 mm. NEXT A TRENCH IS DUG EQUAL IN WIDTH TO THE OUTSIDE DIAMETER OF THE PIPE IN THE FILL DIRECTLY OVER THE CULVERT, DOWN TO AN ELEVATION 305 mm ABOVE THE TOP OF THE PIPE. CARE IS EXERCISED TO KEEP THE SIDES AS VERTICAL AS POSSIBLE. AFTER THE TRENCH IS EXCAVATED, IT IS REFILLLED WITH LOOSE, HIGHLY COMPRESSIBLE SOIL MATERIAL. STRAW, HAY, LEAVES, BRUSH OR SAWDUST MAY BE USED TO FILL THE LOWER ONE-FOURTH TO ONE-THIRD OF THE TRENCH IN ORDER TO INSURE HIGH COMPRESSIBILITY OF THE BACKFILL. THIS BACKFILL OF STRAW, HAY, ETC. MAY NOT BE CARRIED CLOSER THAN 3050 mm TO THE OUTSIDE SLOPE OF THE FILL; THE OUTSIDE 3050 mm IS COMPOSED OF IMPERVIOUS MATERIAL, THOROUGHLY COMPACTED. AFTER THE BACKFILL IS COMPLETED, THE BALANCE OF THE FILL IS CONSTRUCTED BY NORMAL METHODS UP TO THE FINISHED GRADE OF EMBANKMENT.

CLASS C BEDDING

FOR PROJECTING EMBANKMENT CULVERTS, THIS METHOD OF BEDDING IS WITH "ORDINARY" CARE IN AN EARTH FOUNDATION SHAPED IN THE FORM OF AN ARC TO FIT THE LOWER PART OF THE CULVERT EXTERIOR WITH REASONABLE CLOSENESS FOR AT LEAST 10% OF ITS OVERALL HEIGHT. THE REMAINDER OF PIPE IS SURROUNDED BY MATERIAL PLACED BY HAND TOOLS TO COMPLETELY FILL ALL SPACES UNDER AND ADJACENT TO THE PIPE. THEN BACKFILLING IS COMPLETED TO THE TOP AS SPECIFIED IN THE STANDARD SPECIFICATIONS. IF THE CULVERT IS PLACED ON ROCK FOUNDATIONS, PROJECTING EMBANKMENT CULVERT PIPES ARE BEDDED ON AN EARTH CUSHION HAVING A MINIMUM ALLOWABLE THICKNESS OF 305 mm ± WITH THE EARTH FOUNDATION CAREFULLY SHAPED AND FILLED AROUND THE CULVERT THE SAME AS ORDINARY PROJECTING EMBANKMENT BEDDING ON AN EARTH FOUNDATION.

CLASS C-1 BEDDING

THE PIPE IS INSTALLED IN ACCORDANCE WITH CLASS C BEDDING, USING THE IMPERFECT TRENCH METHOD AS DESCRIBED UNDER CLASS B-1 BEDDING.

WHEN NATURAL GROUND MATERIAL SIMULATES BEDDING MATERIAL, NO SPECIAL BEDDING MATERIAL NEED BE USED. CLASS C BEDDING IS USED UNLESS OTHERWISE NOTED ON THE PLANS.

COMPACTION

ALL FOUNDATIONS REQUIRE COMPACTION.

ALL DIMENSIONS ARE MILLIMETERS (mm) UNLESS OTHERWISE NOTED.

DETAILED DRAWING	
REFERENCE STANDARD SPEC. SECTION 207, 603, 701	DWG. NO. 603-20
RCP CULVERT BEDDING	
EFFECTIVE: FEBRUARY 2005	

serving you with pride — MONTANA DEPARTMENT OF TRANSPORTATION

DIA. D	APPROX. DIA. GASKET MATL. NOT STRETCHED	LENGTH OF JOINT J	D1	D2	L2 (MIN.)	L1 (WALL"B")	L1 (WALL"C")	X1	X2	Y1	Y2	Y3
300	16.67	92.08	386.66	389.41	127.00	50.80	~	25.40	22.23	1.57	2.29	7.95
375	16.67	92.08	475.56	478.31	120.65	55.56	~	25.40	22.23	1.57	2.29	7.95
450	16.67	92.08	561.29	564.03	127.00	60.33	~	25.40	22.23	1.57	2.29	7.95
525	16.67	98.43	650.24	653.39	133.35	65.09	~	25.40	22.23	1.57	2.29	7.95
600	16.67	98.43	735.97	739.11	139.70	69.85	50.80	25.40	22.23	1.57	2.29	7.95
675	16.67	101.60	824.89	828.24	139.70	69.85	50.80	25.40	22.23	1.57	2.29	7.95
750	16.67	101.60	913.79	917.14	139.70	69.85	50.80	25.40	22.23	1.57	2.29	7.95
825	16.67	104.78	1002.69	1006.25	146.05	73.03	53.98	25.40	22.23	1.57	2.29	7.95
900	16.67	104.78	1091.59	1095.15	152.40	79.38	60.33	25.40	22.23	1.57	2.29	7.95
1050	19.05	117.48	1274.65	1274.65	171.45	95.25	76.20	30.16	25.40	1.70	3.28	9.55
1200	19.05	120.65	1448.38	1452.70	184.15	104.78	85.73	30.16	25.40	1.70	3.28	9.55
1350	19.05	127.00	1600.38	1605.08	190.50	92.08	73.03	30.16	25.40	1.70	3.28	9.55
1500	19.05	127.00	1752.78	1757.48	190.50	79.38	60.33	30.16	25.40	1.70	3.28	9.55
1650	20.64	127.00	1905.18	1909.88	190.50	69.85	50.80	30.16	25.40	1.70	3.28	9.55
1800	20.64	133.35	2012.95	2016.76	~	~	~	30.16	31.75	2.36	4.83	9.55
1950	20.64	133.35	2190.75	2194.56	~	~	~	30.16	31.75	2.36	4.83	9.55
2100	20.64	133.35	2324.10	2327.91	~	~	~	30.16	31.75	2.36	4.83	9.55
2250	20.64	133.35	2482.85	2486.66	~	~	~	30.16	31.75	2.36	4.83	9.55
2400	20.64	133.35	2647.95	2651.76	~	~	~	30.16	31.75	2.36	4.83	9.55
2550	20.64	133.35	2813.05	2816.86	~	~	~	30.16	31.75	2.36	4.83	9.55
2700	20.64	133.35	2978.15	2981.96	~	~	~	30.16	31.75	2.36	4.83	9.55

1800 DIA. PIPES AND LARGER

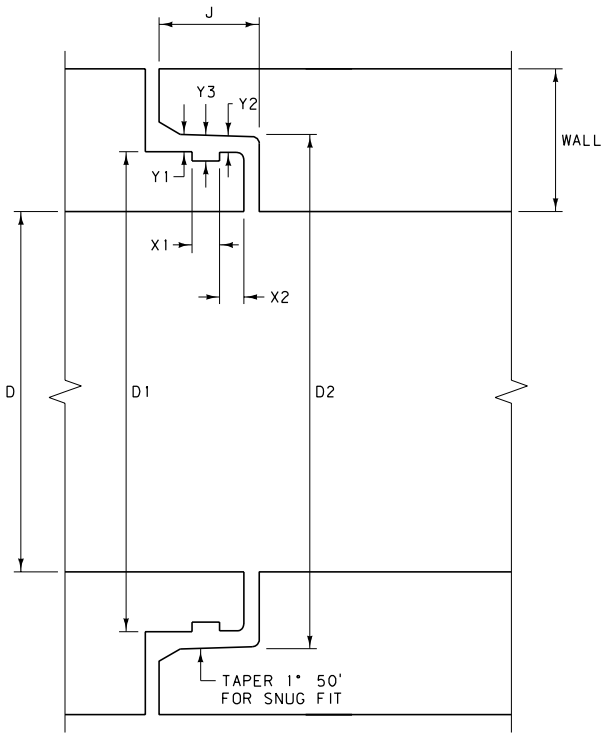

1650 DIA. PIPES AND SMALLER

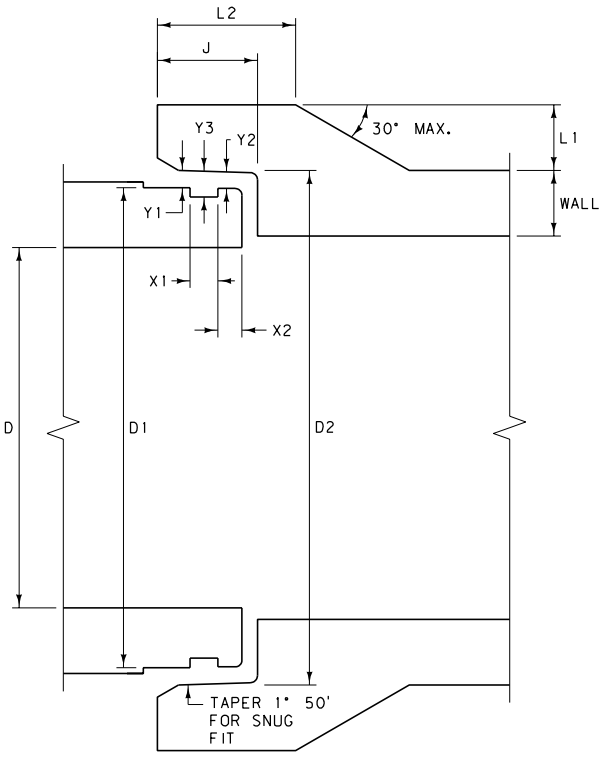

NOTES:

TYPICAL FOR STORM DRAIN AND IRRIGATION APPLICATIONS (FOR HEADS UP TO 6.1 m).

USE RUBBER GASKETS THAT MEET THE REQUIREMENTS OF STANDARD SPECIFICATION 707.02.1.

ALL DIMENSIONS ARE MILLIMETERS (mm) UNLESS OTHERWISE NOTED.

DETAILED DRAWING

REFERENCE STANDARD SPEC. SECTION 603, 707, 708

DWG. NO. 603-22

WATER TIGHT JOINT FOR REINFORCED CONCRETE PIPE

EFFECTIVE: FEBRUARY 2005

serving you with pride

MONTANA DEPARTMENT OF TRANSPORTATION

DIA. D	XSEC. WATER AREA (m²)	WT. PER m OF PIPE (kg)	T * MIN. WALL THICKNESS	J LENGTH OF JOINT	A (NOMINAL) = $\frac{D2 - D1}{2}$	D1	D2	D3	D4
300	0.073	136.9	50.8	44.45	4.76	336.55	346.08	352.43	361.95
375	0.114	189.0	57.2	50.80	4.76	419.10	428.63	438.15	447.68
450	0.164	250.0	63.5	57.15	4.76	498.48	508.00	517.53	527.05
525	0.223	318.5	69.9	63.50	4.76	581.03	590.55	603.25	612.78
600	0.292	394.4	76.2	69.85	4.76	660.40	669.93	685.80	695.33
675	0.369	479.2	82.6	76.20	4.76	742.95	752.48	768.35	777.88
750	0.456	571.5	88.9	82.55	4.76	822.33	831.85	850.90	860.43
825	0.552	672.6	95.3	88.90	6.35	901.70	914.40	933.45	946.15
900	0.657	779.8	101.6	95.25	6.35	984.25	996.95	1016.00	1028.70
1050	0.894	1019.4	114.3	101.60	6.35	1146.18	1152.53	1181.10	1193.80
1200	1.167	1290.2	127.0	107.95	6.35	1308.10	1320.80	1346.20	1358.90
1350	1.478	1592.3	139.7	114.30	6.35	1470.03	1482.73	1508.13	1520.83
1500	1.824	1928.7	152.4	127.00	6.35	1631.95	1644.65	1676.40	1689.10
1650	2.207	2294.7	165.1	139.70	6.35	1793.88	1806.58	1841.50	1854.20
1800	2.627	2693.6	177.8	152.40	6.35	1955.80	1968.50	2006.60	2019.30
1950	3.083	3122.2	190.5	165.10	6.35	2117.73	2130.43	2174.88	2192.87
2100	3.575	3586.5	203.2	177.80	6.35	2279.65	2292.35	2339.98	2352.68
2250	4.104	4077.6	215.9	177.80	6.35	2432.05	2444.75	2492.38	2505.08
2400	4.670	4390.1	228.6	177.80	6.35	2593.98	2606.68	2654.30	2667.00
2550	5.272	4576.1	241.3	190.50	6.35	2768.60	2781.30	2832.10	2844.80
2700	5.910	5759.2	254.0	190.50	6.35	2933.70	2946.40	2997.20	3009.90

* WALL "B" THICKNESS

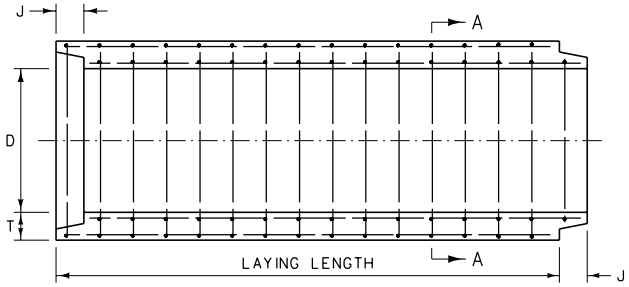

TYPICAL LONGITUDINAL SECTION
900 DIAMETER PIPES AND LARGER

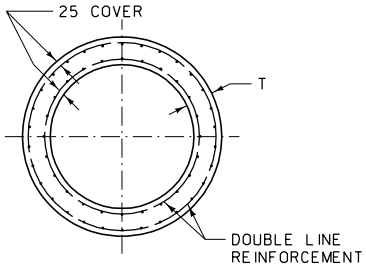

SECTION A-A

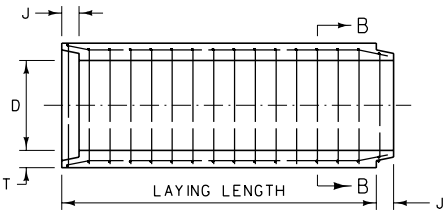

TYPICAL LONGITUDINAL SECTION
825 DIAMETER PIPES AND SMALLER

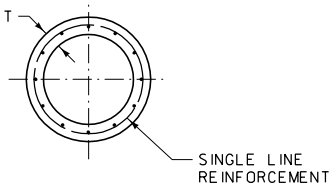

SECTION B-B

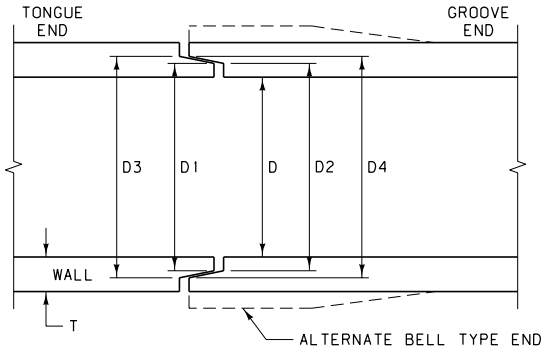

JOINT DETAIL

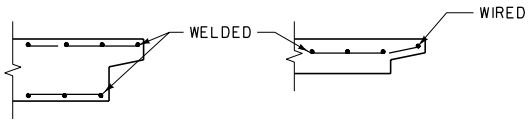

REINFORCING AT ENDS OF PIPE

NOTES:

TOLERANCES IN DIMENSIONS IN ACCORDANCE WITH AASHTO M 170M.

TYPICAL FOR DRAINAGE APPLICATIONS.

ALL DIMENSIONS ARE MILLIMETERS (mm) UNLESS OTHERWISE NOTED.

DETAILED DRAWING	
REFERENCE STANDARD SPEC. SECTION 603, 708	DWG. NO. 603-24
REINFORCED CONCRETE PIPE JOINT	
EFFECTIVE: FEBRUARY 2005	

serving you with pride — MONTANA DEPARTMENT OF TRANSPORTATION

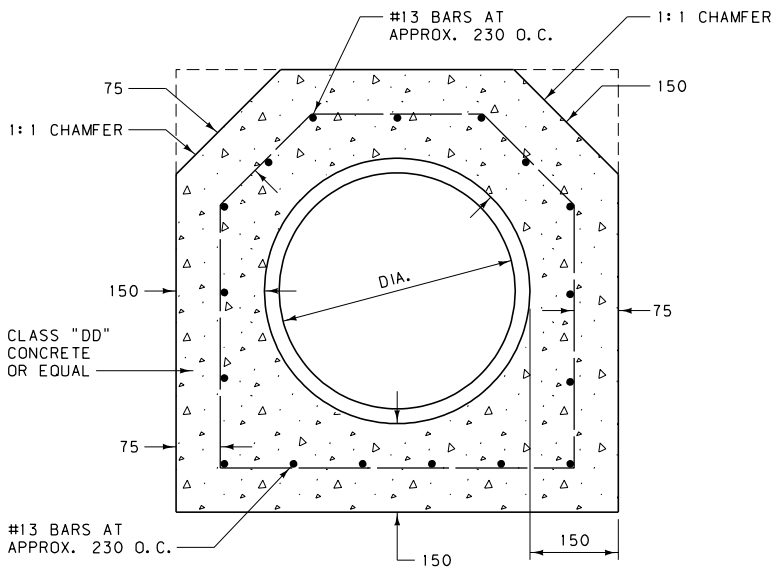

SECTION A-A

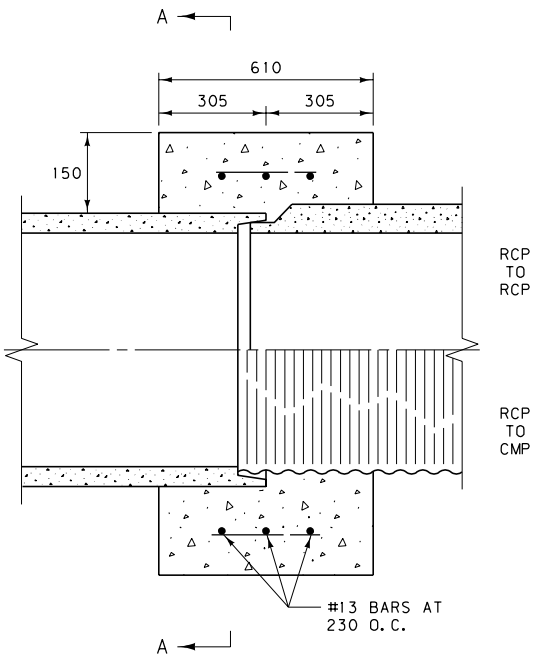

CONNECTION DETAILS

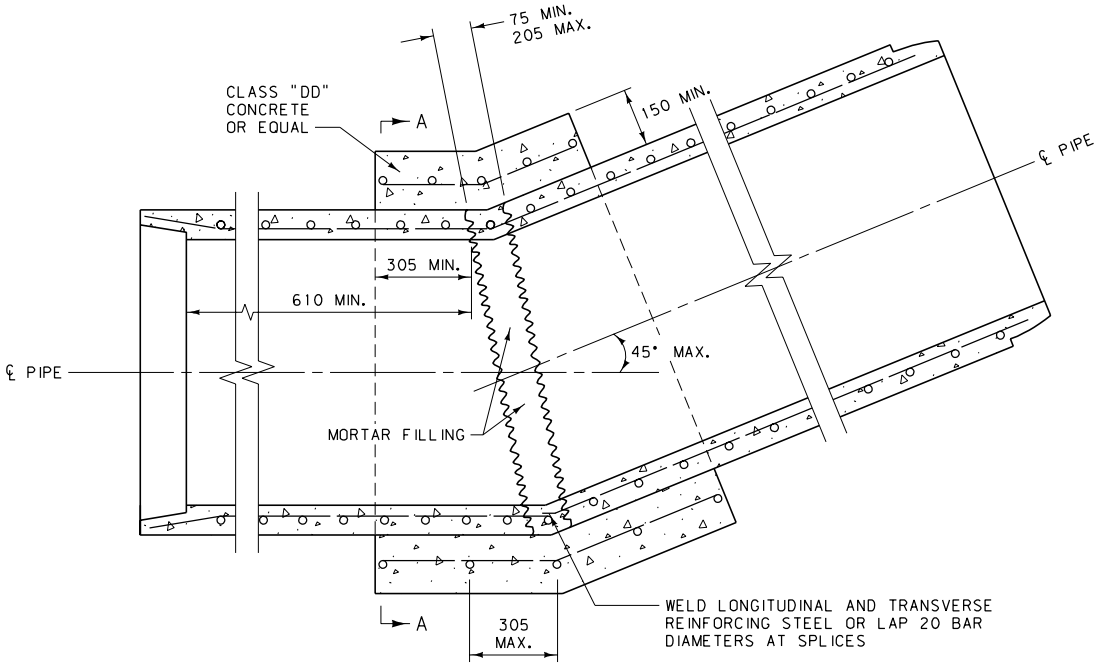

TYPICAL FIELD CAST CONCRETE BEND

ALL DIMENSIONS ARE MILLIMETERS (mm) UNLESS OTHERWISE NOTED.

DETAILED DRAWING	
REFERENCE STANDARD SPEC. SECTION 603, 708	DWG. NO. 603-26
TYPICAL FIELD CAST CONCRETE CONNECTIONS	
EFFECTIVE: FEBRUARY 2005	
serving you with pride	MONTANA DEPARTMENT OF TRANSPORTATION

NOTE: DASHED ARROWS DENOTE DIRECTION OF WATER FLOW.

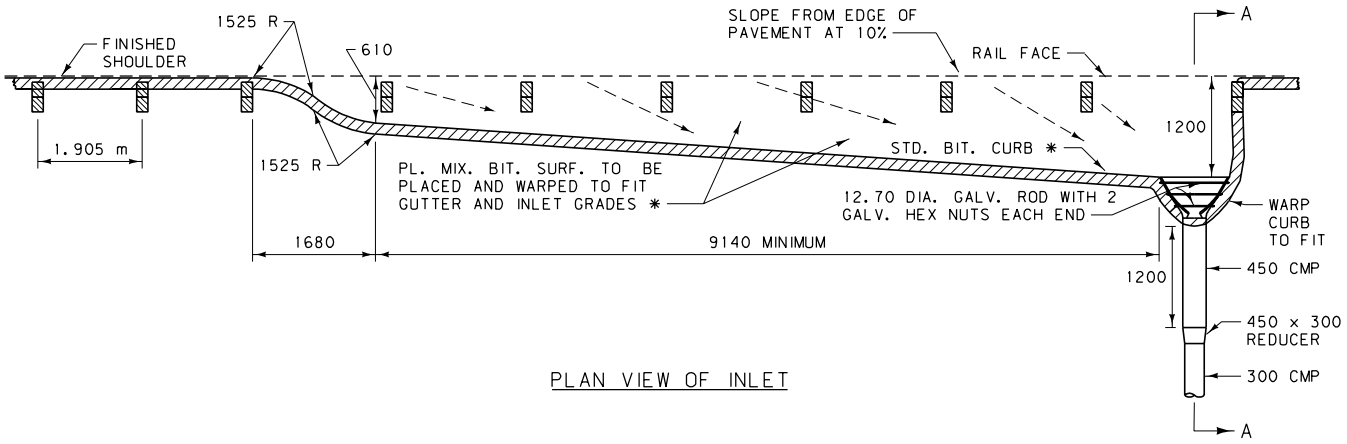

PLAN VIEW OF INLET

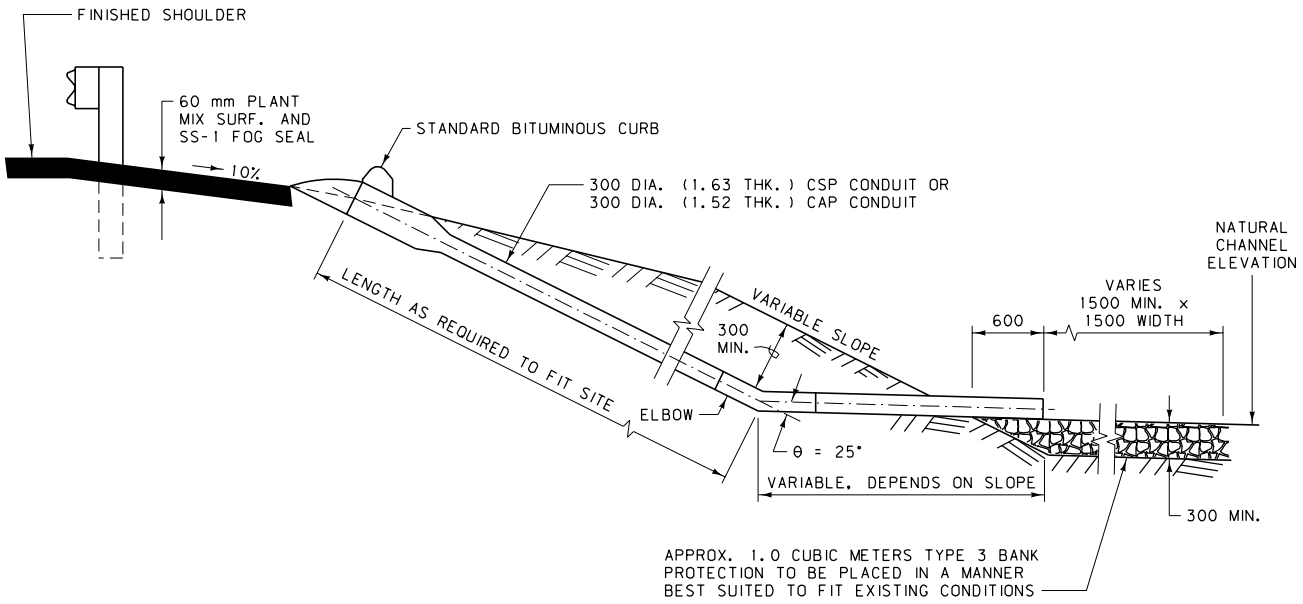

OUTLET DETAIL

SECTION A-A

NOTES:

CORRUGATION MAY BE EITHER ANNULAR OR HELICAL.
BEND ON ELBOW (θ) IS AS SHOWN UNLESS OTHERWISE SPECIFIED IN THE PLANS OR BY THE ENGINEER.

* INCLUDED WITH ROADWAY QUANTITIES.

ALL DIMENSIONS ARE MILLIMETERS (mm) UNLESS OTHERWISE NOTED.

DETAILED DRAWING	
REFERENCE STANDARD SPEC. SECTION 603	DWG. NO. 603-28
EMBANKMENT PROTECTOR	
EFFECTIVE: FEBRUARY 2005	
serving you with pride	MONTANA DEPARTMENT OF TRANSPORTATION

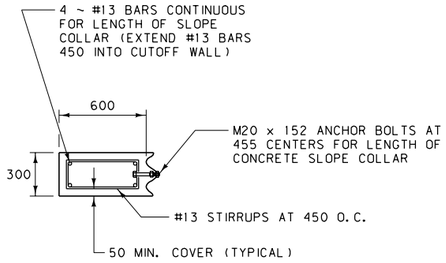

NOTE:
SEE DTL. DWG. NO. 552-00
FOR ANCHOR BOLT DETAILS.

SECTION C-C

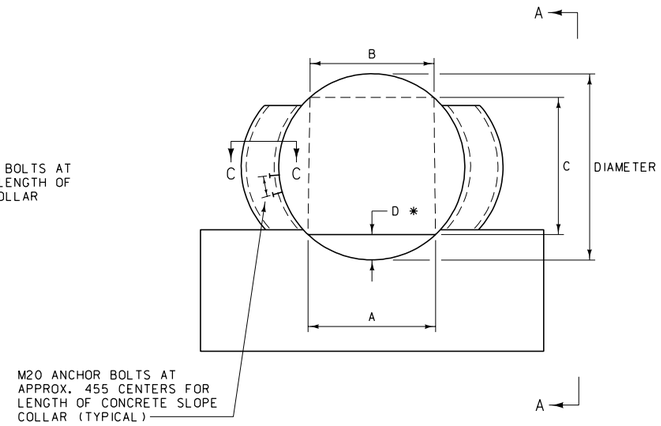

ELEVATION

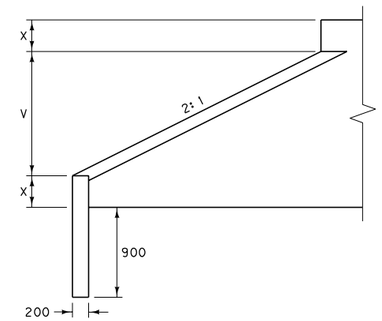

SECTION A-A

NOTES:

DESIGNATE THESE STRUCTURES, IN PLANS AND PROPOSAL, AS "VEHICULAR UNDERPASS." CONFORM MATERIALS, INSTALLATION, AND OTHER PROVISIONS TO THE STANDARD SPECIFICATIONS. USE THE TERM "VEHICULAR UNDERPASS," REGARDLESS OF THE USE OR PURPOSE OF THE STRUCTURE.

PROVIDE END TREATMENT FOR ALL VEHICULAR UNDERPASSES INCLUDING CUTOFF WALLS, BACKFILL RETAINING WALLS AND CONCRETE SLOPE COLLARS.

PROVIDE SURFACING FOR THE INSIDE OF THE STRUCTURE, CROSS-SLOPED TO ALLOW A DRAINAGE COURSE ALONG ONE SIDE.

FOR PLATE THICKNESS SEE ROAD DESIGN MANUAL FILL HEIGHT TABLES.

USE CLASS "DD" CONCRETE OR EQUAL.

SEE DTL. DWG. NO. 552-08 FOR QUANTITIES.

DEPTH OF SURFACING ✱		
MATERIAL	ALTERNATE "A"	ALTERNATE "B"
PL. MIX SURF.	—	60
CR. TOP SURF.	60	60
CR. BASE OR SELECT SURF.	BAL.	BAL.

DIAMETER	A (m)	B (m)	C (m)	V (m)	X (m)	✱ D	BACKFILL RETAINER (m^3)	CONCRETE COLLAR (m^3)
2400	1.2	1.2	2.078	1.200	0.600	173	0.03	0.50
3000	2.1	2.1	2.142	1.500	0.750	441	0.13	0.63
3.825 m	3.0	2.4	2.683	1.916	0.957	750	0.32	0.80
4.135 m	3.0	2.4	3.114	2.071	1.035	669	0.28	0.87
4.755 m	3.6	3.0	3.407	2.381	1.190	848	0.43	1.00
4.910 m	3.6	3.0	3.622	2.459	1.229	809	0.41	1.03
5.220 m	3.6	3.0	4.035	2.613	1.307	744	0.38	1.10
5.530 m	3.6	3.0	4.431	2.770	1.384	690	0.35	1.16
5.840 m	4.8	3.6	3.975	2.924	1.462	1279	0.87	1.23
6.150 m	4.8	3.6	4.428	3.079	1.540	1176	0.80	1.29

SURFACING QUANTITIES PER METER FOR DEPTH "D" ✱									
	ALTERNATE "A"		ALTERNATE "B"						
	m^3 SURFACING		TONS SURFACING		m^3 SURFACING		TONS BIT. MATL.		
DIAMETER	CRUSHED TOP SURF.	CR. BASE OR SEL. SURF.	COVER MATERIAL	PLANT MIX	CRUSHED TOP SURF.	CR. BASE OR SEL. SURF.	PLANT MIX	PRIME	SEAL
2400	0.069	0.078	0.0175	0.158	0.053	0.025	0.0095	0.0015	0.0020
3000	0.124	0.525	0.0299	0.284	0.116	0.409	0.0170	0.0029	0.0034
3.825 m	0.181	1.423	0.0429	0.414	0.175	1.248	0.0248	0.0042	0.0049
4.135 m	0.181	1.239	0.0430	0.414	0.174	1.065	0.0248	0.0042	0.0049
4.755 m	0.217	1.942	0.0513	0.496	0.210	1.732	0.0298	0.0051	0.0059
4.910 m	0.217	1.839	0.0514	0.496	0.210	1.629	0.0298	0.0051	0.0059
5.220 m	0.217	1.665	0.0514	0.496	0.209	1.456	0.0298	0.0051	0.0059
5.530 m	0.217	1.524	0.0515	0.496	0.208	1.316	0.0298	0.0050	0.0059
5.840 m	0.289	4.079	0.0681	0.661	0.284	3.795	0.0397	0.0068	0.0078
6.150 m	0.289	3.696	0.0681	0.661	0.283	3.413	0.0397	0.0068	0.0078

BACKFILL RETAINER & CUTOFF WALL DETAIL

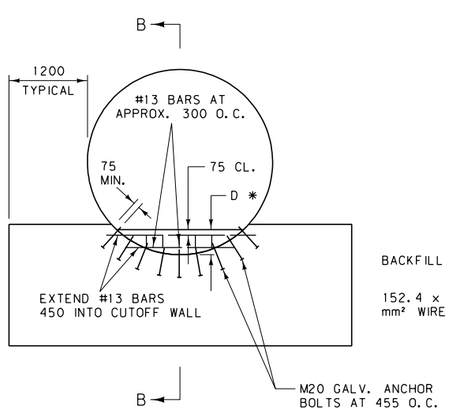

ELEVATION

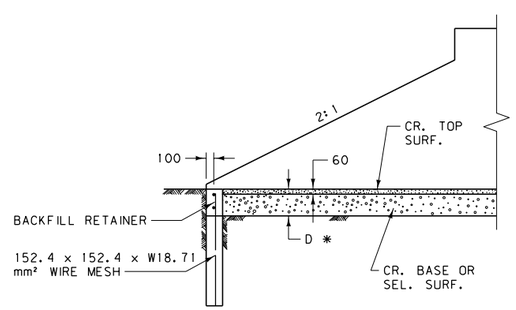

SECTION B-B
(ALTERNATE "A")

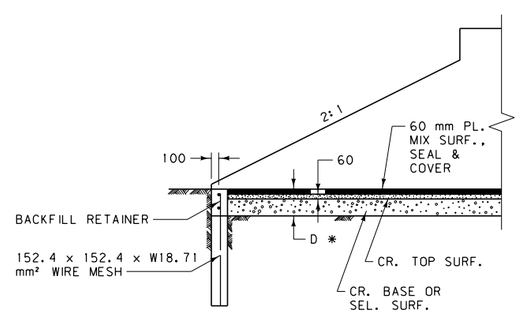

SECTION B-B
(ALTERNATE "B")

NOTE:
INCLUDE CONCRETE COLLAR WHEN SPECIFIED.

ALL DIMENSIONS ARE MILLIMETERS (mm) UNLESS OTHERWISE NOTED.

DETAILED DRAWING	
REFERENCE STANDARD SPEC. SECTION 552.603	DWG. NO. 603-30
VEHICULAR UNDERPASS AND BACKFILL RETAINER & CUTOFF WALL DETAIL	
EFFECTIVE: FEBRUARY 2005	

serving you with pride — MONTANA DEPARTMENT OF TRANSPORTATION

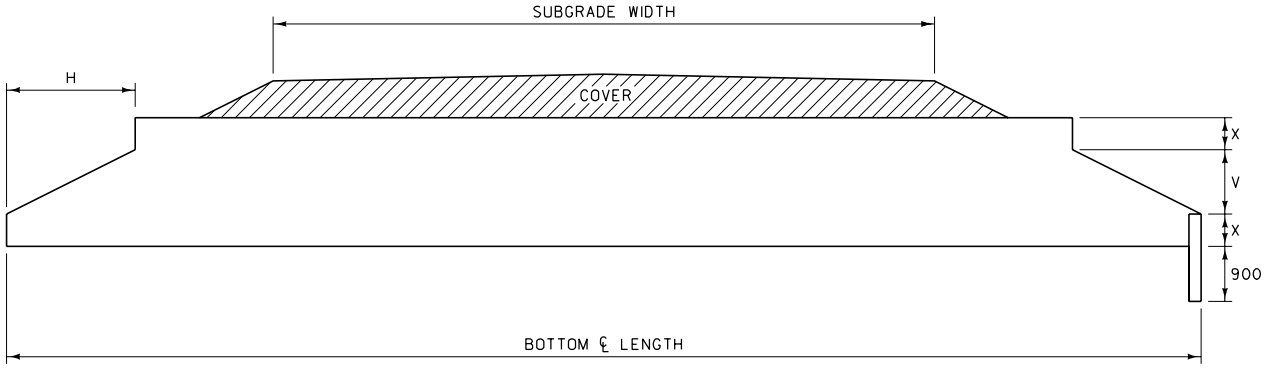

NOTE:
FOR DETAILS COVERING CUTOFF WALLS
SEE DTL. DWG. NO. 552-00.

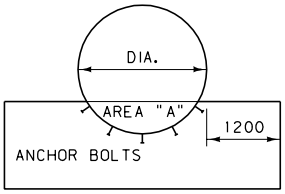

DIA.	X (m)	V (m)	H (m) FOR BEVELS:		AREA "A" (m²) *
			1.5:1	2:1	
CSP 75 x 25 OR 125 x 25 CORRUGATIONS					
1200	0.300	0.600	0.900	1.200	0.24
1350	0.338	0.674	1.011	1.348	0.30
1500	0.375	0.750	1.125	1.500	0.37
1650	0.412	0.826	1.239	1.652	0.44
1800	0.450	0.900	1.350	1.800	0.52
1950	0.488	0.974	1.461	1.948	0.61
2100	0.525	1.050	1.575	2.100	0.70
2250	0.563	1.124	1.686	2.248	0.81
2400	0.600	1.200	1.800	2.400	0.92
2550	0.637	1.276	1.914	2.552	1.03
2700	0.675	1.350	2.025	2.700	1.15
2850	0.712	1.426	2.139	2.852	1.28
3000	0.750	1.500	2.250	3.000	1.42

DIA.	X (m)	V (m)	H (m) FOR BEVELS:		AREA "A" (m²) *
			1.5:1	2:1	
SSPP 152 x 51 CORRUGATIONS					
3.205	0.802	1.605	2.408	3.210	1.67
3.360	0.841	1.682	2.523	3.364	1.83
3.515	0.880	1.760	2.640	3.520	2.00
3.670	0.919	1.837	2.756	3.674	2.17
3.825	0.957	1.916	2.874	3.832	2.36
3.980	0.996	1.993	2.990	3.986	2.55
4.135	1.035	2.071	3.107	4.142	2.74
4.290	1.074	2.148	3.222	4.296	2.95
4.445	1.113	2.225	3.338	4.450	3.16
4.600	1.152	2.302	3.453	4.604	3.38
4.755	1.190	2.381	3.572	4.762	3.61
4.910	1.229	2.459	3.689	4.918	3.84
5.065	1.268	2.536	3.804	5.072	4.09
5.220	1.307	2.613	3.920	5.226	4.34
5.375	1.346	2.690	4.035	5.380	4.59
5.530	1.384	2.770	4.155	5.540	4.86
5.685	1.423	2.847	4.271	5.694	5.13
5.840	1.462	2.924	4.386	5.848	5.41
5.995	1.501	3.001	4.502	6.002	5.69
6.150	1.540	3.079	4.619	6.158	5.99
6.305	1.578	3.158	4.737	6.316	6.29
6.460	1.617	3.235	4.853	6.470	6.60

* AREA "A" IS TO THE MIDDLE OF THE CORRUGATIONS.

NOMINAL DIAMETER

ALL DIMENSIONS ARE MILLIMETERS (mm) UNLESS OTHERWISE NOTED.

DETAILED DRAWING

REFERENCE
STANDARD SPEC.
SECTION 603

DWG. NO.
603-32

STEP BEVEL FOR
CIRCULAR METAL CULVERT

EFFECTIVE: FEBRUARY 2005

serving you with pride

MONTANA DEPARTMENT OF TRANSPORTATION

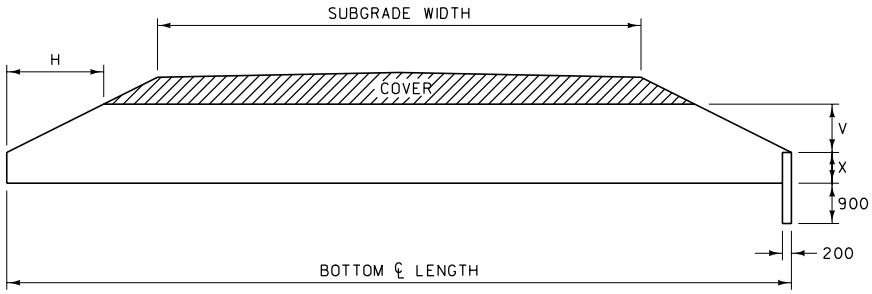

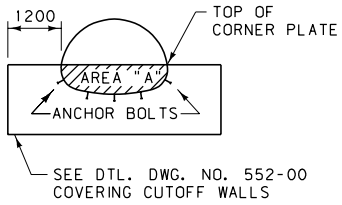

SPAN (m)	RISE (m)	X (m)	V (m)	H (m) FOR BEVELS: 1.5:1	2:1	2.5:1	AREA "A" (m²)
SSPPA 152 x 51 CORRUGATIONS WITH 457 CORNER RADIUS							
1.850	1.400	0.533	0.867	1.301	1.734	2.168	0.88
1.930	1.450	0.521	0.929	1.394	1.858	2.323	0.91
2.060	1.500	0.559	0.941	1.412	1.882	2.353	1.01
2.130	1.550	0.544	1.006	1.509	2.012	2.515	1.04
2.210	1.600	0.528	1.072	1.608	2.144	2.680	1.06
2.340	1.650	0.569	1.081	1.622	2.162	2.703	1.18
2.410	1.700	0.551	1.149	1.724	2.298	2.873	1.19
2.490	1.750	0.531	1.219	1.829	2.438	3.048	1.21
2.620	1.800	0.577	1.223	1.835	2.446	3.058	1.34
2.690	1.850	0.556	1.294	1.941	2.588	3.235	1.35
2.840	1.910	0.605	1.305	1.958	2.610	3.263	1.50
2.900	1.960	0.582	1.378	2.067	2.756	3.445	1.50
2.970	2.010	0.556	1.454	2.181	2.908	3.635	1.50
3.120	2.060	0.610	1.450	2.175	2.900	3.625	1.66
3.250	2.110	0.663	1.447	2.171	2.894	3.618	1.85
3.330	2.160	0.638	1.522	2.283	3.044	3.805	1.84
3.480	2.210	0.696	1.514	2.271	3.028	3.785	2.04
3.530	2.260	0.668	1.592	2.388	3.184	3.980	2.03
3.610	2.310	0.640	1.670	2.505	3.340	4.175	2.01
3.760	2.360	0.698	1.662	2.493	3.324	4.155	2.22
3.810	2.410	0.671	1.739	2.609	3.478	4.348	2.20
3.860	2.460	0.640	1.820	2.730	3.640	4.550	2.17
3.910	2.540	0.610	1.930	2.895	3.860	4.825	2.13
4.090	2.570	0.671	1.899	2.849	3.798	4.748	2.37
SSPPA 152 x 51 CORRUGATIONS WITH 787 CORNER RADIUS							
4.040	2.840	1.189	1.651	2.477	3.302	4.128	4.25
4.110	2.900	1.158	1.742	2.613	3.484	4.355	4.21
4.270	2.950	1.219	1.731	2.597	3.462	4.328	4.56
4.320	3.000	1.158	1.842	2.763	3.684	4.605	4.42
4.390	3.050	1.128	1.922	2.883	3.844	4.805	4.40
4.550	3.100	1.219	1.881	2.822	3.762	4.703	4.87
4.670	3.150	1.311	1.839	2.759	3.678	4.598	5.35
4.750	3.200	1.250	1.950	2.925	3.900	4.875	5.20
4.830	3.250	1.189	2.061	3.092	4.122	5.153	5.03
4.950	3.300	1.311	1.989	2.984	3.978	4.973	5.68
5.030	3.350	1.250	2.100	3.150	4.200	5.250	5.52
5.180	3.400	1.341	2.059	3.089	4.118	5.148	6.02
5.230	3.450	1.311	2.139	3.209	4.278	5.348	6.00
5.310	3.510	1.250	2.260	3.390	4.520	5.650	5.82
5.460	3.560	1.311	2.249	3.374	4.498	5.623	6.18
5.510	3.610	1.280	2.330	3.495	4.660	5.825	6.17
5.660	3.660	1.372	2.288	3.432	4.576	5.720	6.71
5.720	3.710	1.311	2.399	3.599	4.798	5.998	6.51
5.870	3.760	1.402	2.358	3.537	4.716	5.895	7.08
5.940	3.810	1.341	2.469	3.704	4.938	6.173	6.88
5.990	3.860	1.311	2.549	3.824	5.098	6.373	6.84
6.070	3.910	1.250	2.660	3.990	5.320	6.650	6.63
6.220	3.960	1.341	2.619	3.929	5.238	6.548	7.21
6.270	4.010	1.311	2.699	4.049	5.398	6.748	7.17

SPAN	RISE	X (m)	V (m)	H (m) FOR BEVELS: 1.5:1	2:1	2.5:1	AREA "A" (m²)
CSPA 75 x 25 CORRUGATIONS (SEE NOTE ⊗)							
1010	790	0.330	0.460	0.690	0.920	~	0.29
1160	920	0.395	0.525	0.788	1.050	~	0.40
1340	1050	0.385	0.665	0.998	1.330	~	0.38
1520	1170	0.520	0.650	0.975	1.300	~	0.65
1670	1300	0.580	0.720	1.080	1.440	~	0.80
1850	1400	0.640	0.760	1.140	1.520	~	0.99
2050	1500	0.605	0.895	1.343	1.790	~	1.03
2200	1620	0.655	0.965	1.448	1.930	~	1.22
2400	1720	0.705	1.015	1.523	2.030	~	1.42
2600	1820	0.755	1.065	1.598	2.130	~	1.65
2840	1920	0.805	1.115	1.673	2.230	~	1.88
2970	2020	0.855	1.165	1.748	2.330	~	2.14
3240	2120	0.905	1.215	1.823	2.430	~	2.40
3470	2220	0.955	1.265	1.898	2.530	~	2.69
3600	2320	1.005	1.315	1.973	2.630	~	2.99
CSPA 68 x 13 CORRUGATIONS (SEE NOTE ⊗)							
1440	970	0.330	0.640	0.960	1.280	~	0.41
1620	1100	0.370	0.730	1.095	1.460	~	0.52
1800	1200	0.415	0.785	1.178	1.570	~	0.64
1950	1320	0.455	0.865	1.298	1.730	~	0.76
2100	1450	0.495	0.955	1.433	1.910	~	0.89

NOTES:

BEVEL TO TOP OF CORNER PLATE.

PIPE ENDS ARE SQUARE (PERPENDICULAR TO CENTERLINE OF PIPE) AND FILL SLOPES ARE WARPED TO ACCOMMODATE THE SQUARE ENDS UNLESS SPECIFIED OTHERWISE ON PLANS.

⊗ TABULATED VALUES BASED ON NOMINAL PIPE DIMENSIONS. IN PLACE DIMENSIONS SUBJECT TO TOLERANCES LISTED IN CURRENT AASHTO M 36M AND M 196M.

ALL DIMENSIONS ARE MILLIMETERS (mm) UNLESS OTHERWISE NOTED.

DETAILED DRAWING

REFERENCE STANDARD SPEC. SECTION 603

DWG. NO. 603-34

BEVEL ON ARCH METAL CULVERT

EFFECTIVE: FEBRUARY 2005

serving you with pride

MONTANA DEPARTMENT OF TRANSPORTATION

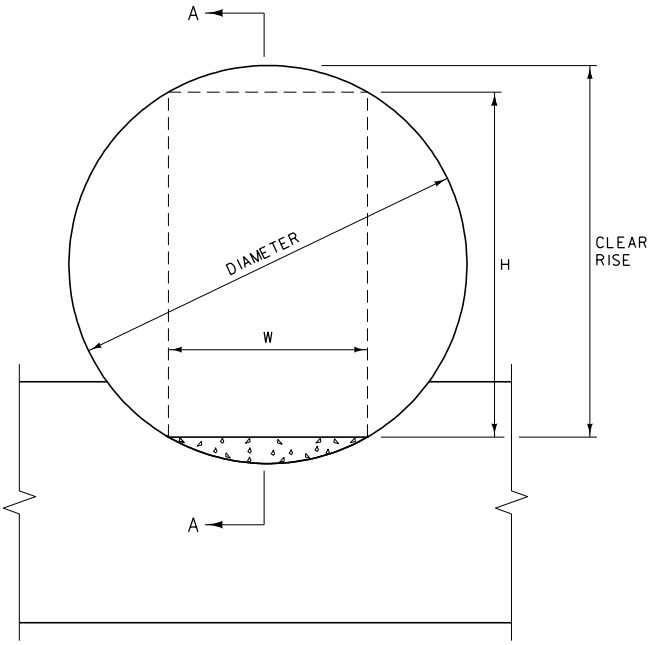

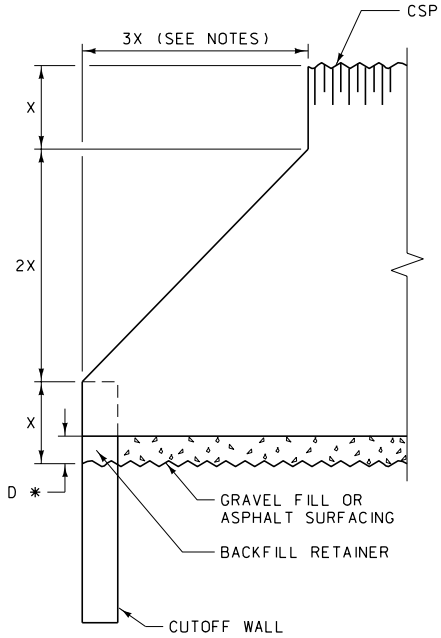

SECTION A-A

DIAMETER	X (m)	* D	CLEAR RISE (m)	H (m)	W (m)	BACKFILL RETAINER (m^3)
2100	0.525	168	1.944	1.789	1.1	0.03
2250	0.563	257	2.006	1.761	1.4	0.05
2400	0.600	276	2.137	1.873	1.5	0.06

	SURFACING QUANTITIES PER METER FOR DEPTH "D" *				
	FULL DEPTH GRAVEL	60 mm PMS AND REMAINING DEPTH GRAVEL			
	m^3 SURF.	TONS SURF.	m^3 SURF.	TONS BIT. MATERIAL	
DIAMETER	CR. TOP SURF.	PLANT MIX	CR. TOP SURF.	PLANT MIX	PRIME
2100	0.131	0.144	0.068	0.0086	0.0013
2250	0.253	0.188	0.171	0.0113	0.0018
2400	0.291	0.201	0.203	0.0121	0.0020

NOTES:

UNLESS OTHERWISE SPECIFIED, INSTALL STOCKPASSES WITH CUTOFF WALLS AND BACKFILL RETAINERS AT EACH END, GRAVEL FILL AND BEDDING MATERIAL.

WHEN SPECIFIED, INSTALL COMBINATION STOCKPASSES AND DRAINS WITH CUTOFF WALLS, BACKFILL RETAINERS AT BOTH ENDS, CONCRETE EDGE PROTECTION AT THE INLET END, RANDOM RIPRPAP AT THE OUTLET END, BEDDING MATERIAL AND ASPHALT SURFACING; CROSS SLOPE ASPHALT SURFACING TO ALLOW DRAINAGE COURSE ALONG ONE SIDE. (SEE DTL. DWG. NO. 613-14 AND 613-06.)

UNLESS OTHERWISE SPECIFIED, STEP BEVEL PIPE ENDS AT A 1.5:1 SLOPE.

SEE FILL HEIGHT TABLES FOR THICKNESS REQUIREMENTS.

SEE DTL. DWG. NO. 552-00, 603-30 AND 603-18.

ALL DIMENSIONS ARE MILLIMETERS (mm) UNLESS OTHERWISE NOTED.

DETAILED DRAWING

REFERENCE STANDARD SPEC. SECTION 603

DWG. NO. 603-36

CORRUGATED STEEL PIPE STOCKPASS

EFFECTIVE: FEBRUARY 2005

serving you with pride

MONTANA DEPARTMENT OF TRANSPORTATION

NOTE:
WHEN MEDIAN INLET COVER IS INSTALLED OVER PIPES LARGER THAN 900 mm, WITHOUT ADEQUATE COVER TO PERMIT THE USE OF TYPE 1 INSTALLATION, PROVIDE A DETAIL OF THE INSTALLATION IN THE PLANS.

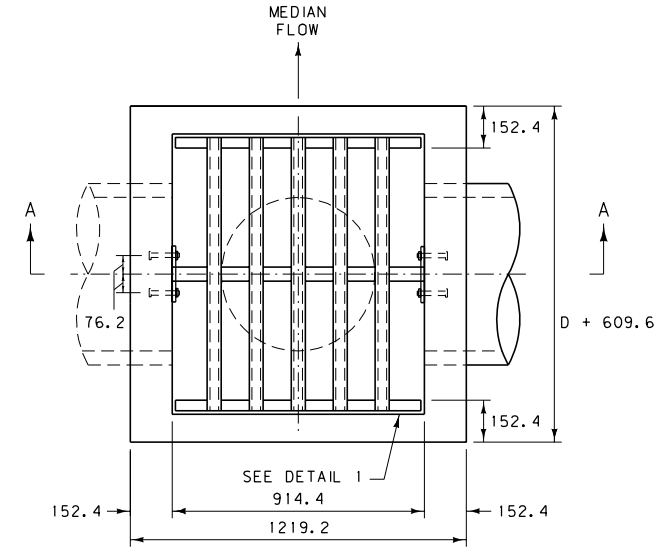

PLAN VIEW

TYPICAL FOR TYPES 1, 2 AND 3

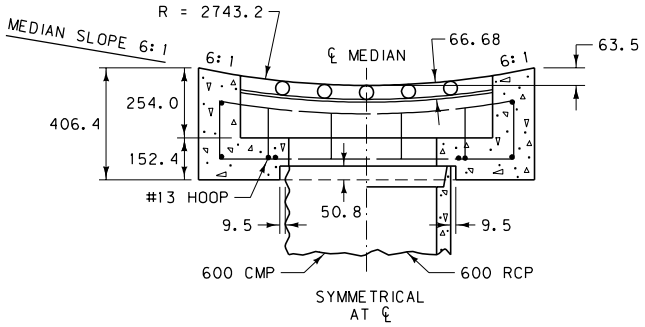

SECTION A-A

TYPE 1

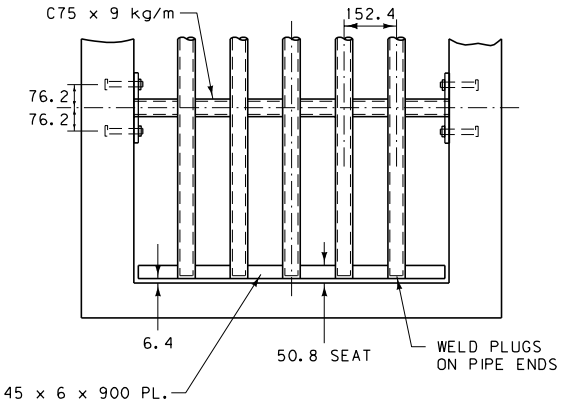

DETAIL 1

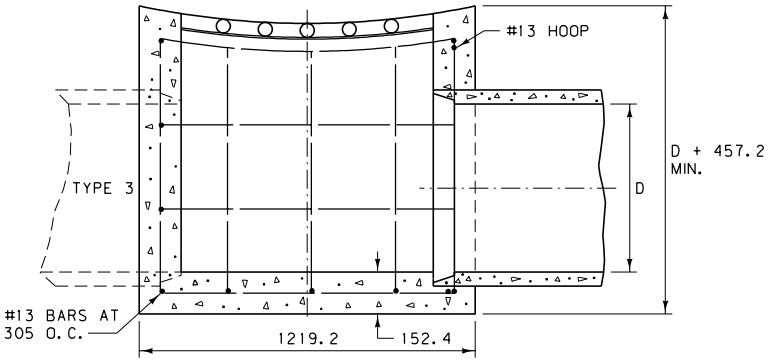

SECTION A-A

TYPE 2 HAS 1 PIPE CONNECTION
TYPE 3 HAS 2 PIPE CONNECTIONS

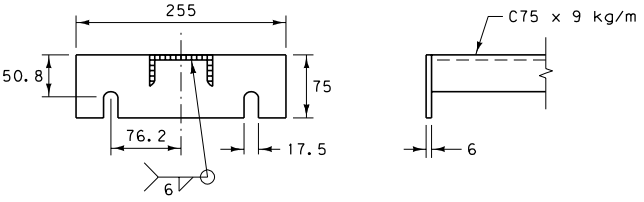

DETAIL 2

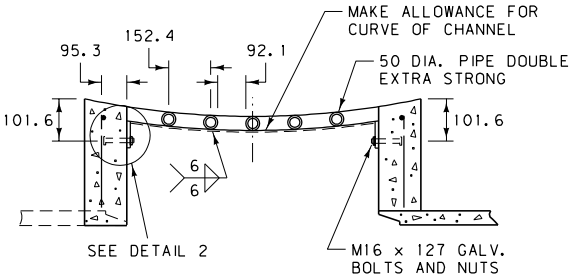

COVER DETAIL

TYPES 2 & 3

GRATE AND REINFORCING STEEL (kg) ✱			
TYPE	CMP AND RCP		
	600 mm	750 mm	900 mm
1	22.7	~	~
2	38.6	43.1	47.6
3	38.6 ⊛	43.1 ⊛	47.6 ⊛
GRATE	74.8	83.9	95.3

CLASS "DD" CONC. OR EQUAL (CUBIC METERS) ✱						
TYPE	600 mm		750 mm		900 mm	
	CMP	RCP	CMP	RCP	CMP	RCP
1	0.31	0.31	~	~	~	~
2	0.76	0.76	0.84	0.76	0.92	0.84
3	0.69 ⊛	0.69 ⊛	0.76 ⊛	0.69 ⊛	0.76 ⊛	0.69 ⊛

✱ QUANTITIES ARE FOR ESTIMATING PURPOSES ONLY.
⊛ TYPE 3 IS A SPECIAL CASE TO BE FIGURED FOR THE PARTICULAR INSTALLATION.

NOTE:
PAINT ALL EXPOSED METAL PARTS WITH ONE COAT OF ZINC RICH PAINT AND TWO COATS OF ALUMINUM PAINT IN ACCORDANCE WITH SECTION 710 OF THE STANDARD SPECIFICATIONS.

ALL DIMENSIONS ARE MILLIMETERS (mm) UNLESS OTHERWISE NOTED.

DETAILED DRAWING

REFERENCE STANDARD SPEC. SECTION 604

DWG. NO. 604-00

MEDIAN INLET COVER

EFFECTIVE: FEBRUARY 2005

MDT serving you with pride — MONTANA DEPARTMENT OF TRANSPORTATION

* MINIMUM WEIGHT FOR FRAME AND LID IS 180 kg. TOOL RING AND COVER TO A MACHINE FIT.

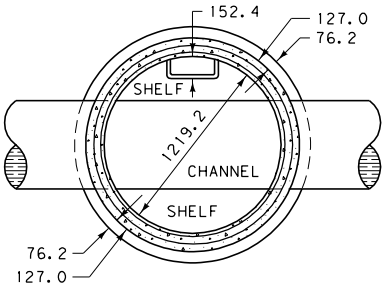

SECTION A-A

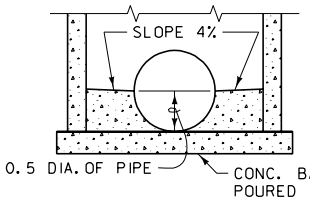

SECTION B-B

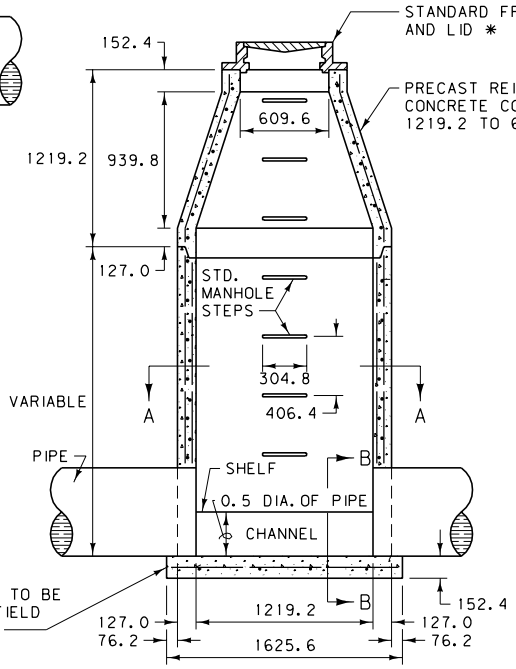

ELEVATION

TYPE 1 MANHOLE

UPPER PART IS A CONE TO REDUCE DIAMETER FROM 1219.2 mm TO 609.6 mm. CUT BOTTOM OF LOWER SECTION SQUARE TO FIT BASE. GROUT JOINT BETWEEN BASE AND WALL. A GROUT CONSISTING OF ONE PART PORTLAND CEMENT AND TWO PARTS APPROVED SAND MAY BE USED; AN APPROVED PREMIXED GROUT, AVAILABLE COMMERCIALLY, MAY BE USED.

CONFORM ALL MANHOLE CONSTRUCTION, EXCEPTING FRAME, LID, AND BASE, TO AASHTO M 199M. THIS PROVIDES THAT REINFORCEMENT MAY BE MADE OF (1) COLD DRAWN STEEL WIRE- AASHTO M 32M, (2) STEEL WIRE FABRIC- AASHTO M 55M, OR (3) STEEL BARS- AASHTO M 31M.

THE CONSTRUCTION AND REINFORCEMENT OF THE BASE FOR EACH TYPE MUST BE COMPATIBLE WITH THE CONDITIONS AND THE WEIGHT OF THE SUPERSTRUCTURE. AASHTO M 199M PROVIDES FOR 27.6 MPa CONCRETE. THE MIX CALLS FOR 335 kg OF CEMENT PER CUBIC METER. REINFORCEMENT SHOWN IS ILLUSTRATIVE ONLY. SEE AASHTO M 199M.

THE ECCENTRIC CONE TRANSITION WILL BE PERMITTED WHEN ITS USE WILL BE AS GOOD OR BETTER THAN THE ONES SHOWN, OR IF IT IS MORE ADAPTABLE TO EXISTING CONDITIONS.

USE MANHOLE STEPS THAT ARE METALLIC AND COATED WITH COPOLYMER POLYPROPYLENE, OR AN APPROVED EQUAL. THE MINIMUM DESIGN LIVE LOAD FOR A SINGLE CONCENTRATED LOAD IS 135 kg.

TYPE 3 MANHOLE ROOF SLAB					
PIPE DIA.	SLAB DIA.	T	K	BOTTOM BARS	TOP BARS
1200	1473.2	152.4	152.4	#13 AT 150	~
1350	1651.0	203.2	152.4	#13 AT 150	~
1500	1828.8	203.2	177.8	#13 AT 150	#10 AT 150
1650	2006.6	203.2	177.8	#13 AT 150	#10 AT 150
1800	2184.4	203.2	203.2	#13 AT 150	#10 AT 150
1950	2362.2	203.2	203.2	#13 AT 100	#13 AT 100
2100	2540.0	203.2	228.6	#13 AT 100	#13 AT 100
2250	2717.8	203.2	228.6	#13 AT 100	#13 AT 100
2400	2895.6	203.2	228.6	#16 AT 100	#13 AT 100
2550	3073.4	203.2	228.6	#16 AT 100	#13 AT 100

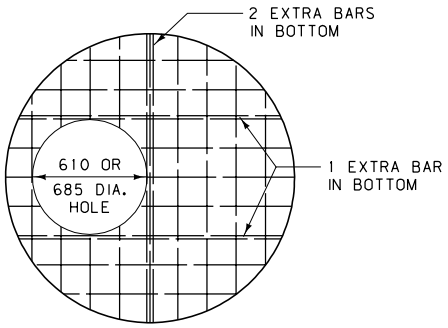

TYPE 3 MANHOLE ROOF SLAB

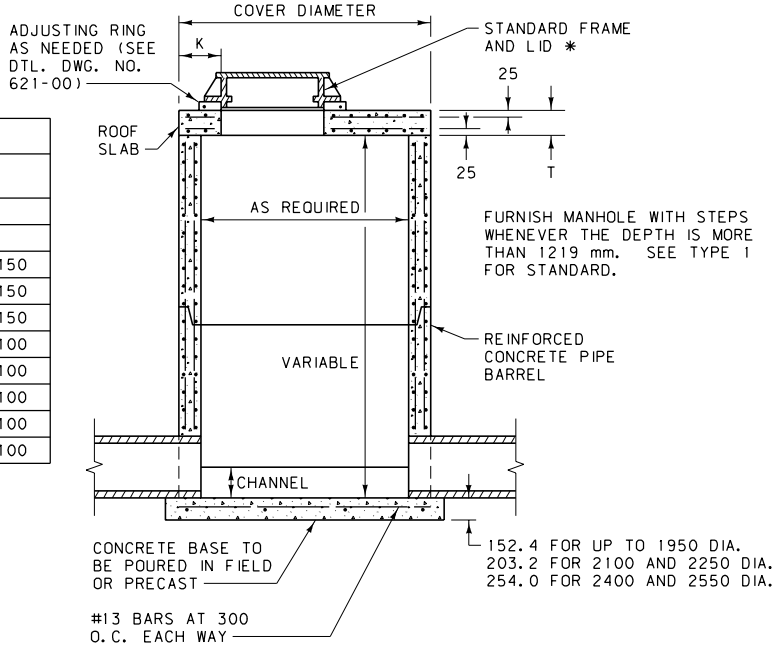

FURNISH MANHOLE WITH STEPS WHENEVER THE DEPTH IS MORE THAN 1219 mm. SEE TYPE 1 FOR STANDARD.

TYPE 3 MANHOLE

ALL DIMENSIONS ARE MILLIMETERS (mm) UNLESS OTHERWISE NOTED.

DETAILED DRAWING	
REFERENCE STANDARD SPEC. SECTION 604, 711	DWG. NO. 604-02
CONCRETE MANHOLE	
EFFECTIVE: FEBRUARY 2005	

MDT serving you with pride — MONTANA DEPARTMENT OF TRANSPORTATION

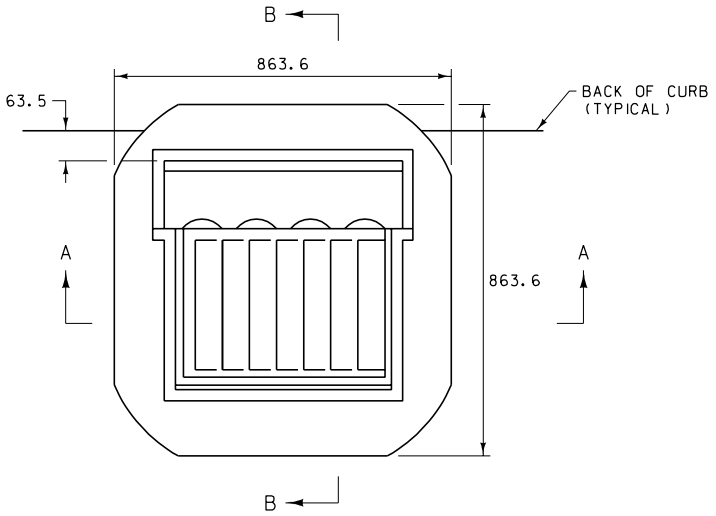

PLAN

NEENAH FOUNDRY R-3286-8V (JUNE 1992 REVISION) OR APPROVED EQUAL (VANE STYLE)

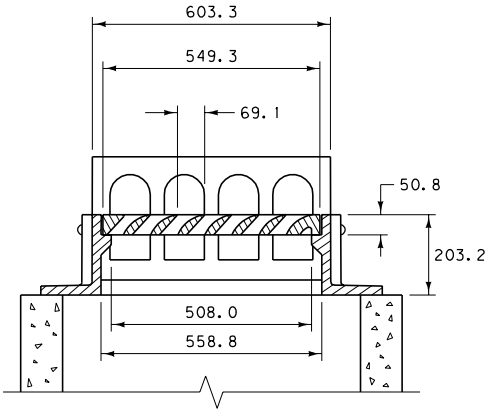

SECTION A-A

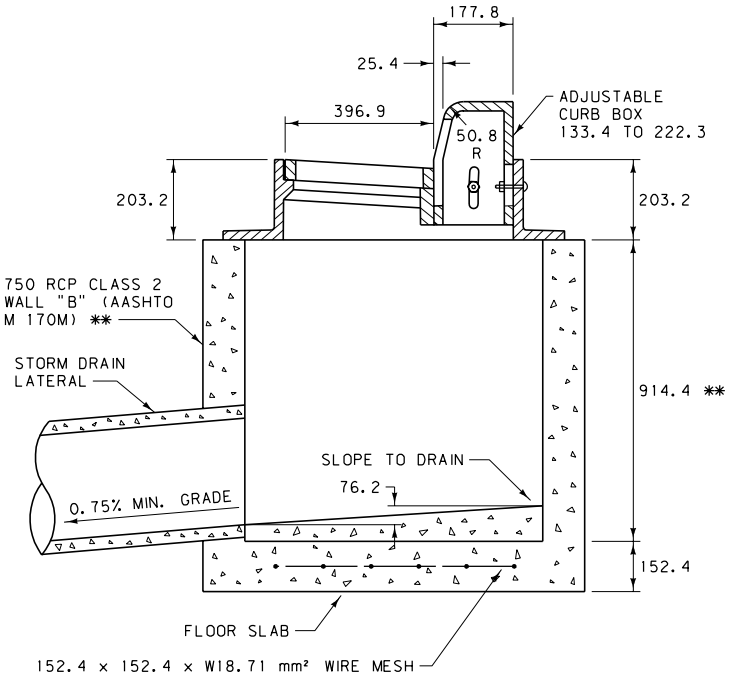

SECTION B-B

** STANDARD UNLESS OTHERWISE NOTED ON THE PLANS.

COMBINATION

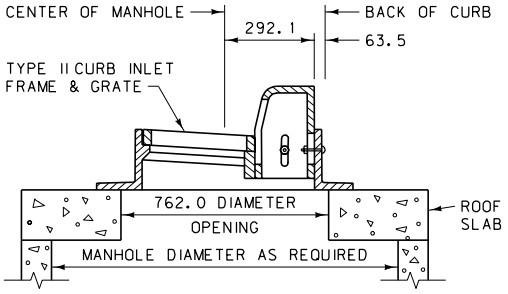

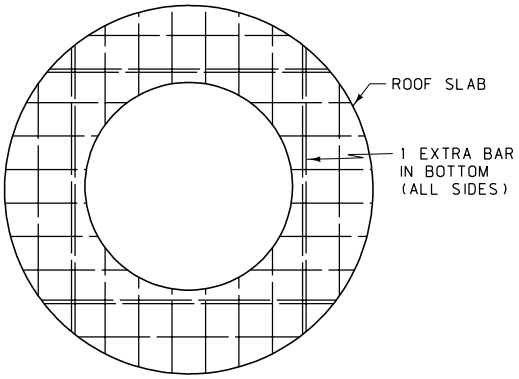

ROOF SLAB

SEE DETAILED DRAWING NO. 604-02 FOR DIAMETER, SLAB THICKNESS AND REINFORCING REQUIREMENTS FOR COMBINATION TYPE 3 MANHOLE, TYPE II CURB INLET.

NOTE:
ALL CONCRETE IS CLASS "DD" OR APPROVED EQUAL.

ALL DIMENSIONS ARE MILLIMETERS (mm) UNLESS OTHERWISE NOTED.

DETAILED DRAWING	
REFERENCE STANDARD SPEC. SECTION 604	DWG. NO. 604-03
CURB INLET TYPE II	
EFFECTIVE: FEBRUARY 2005	

MDT serving you with pride — MONTANA DEPARTMENT OF TRANSPORTATION

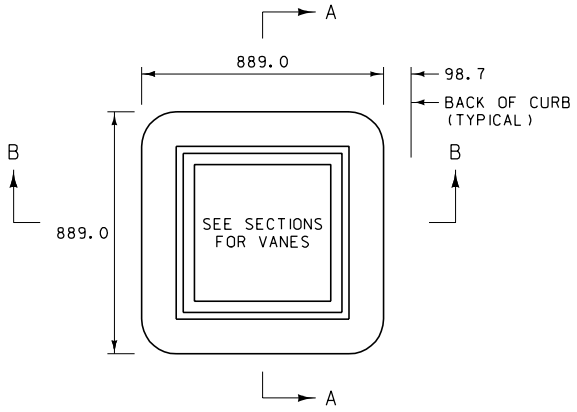

PLAN

NEENAH CASTING R-3210-L (VANE STYLE) OR APPROVED EQUAL

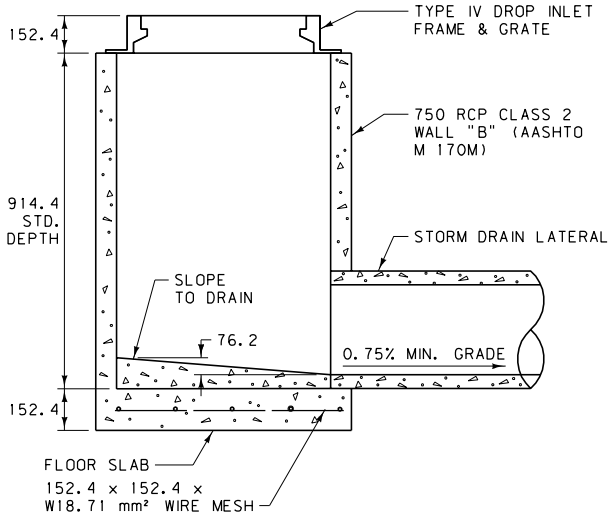

SINGLE DROP INLET
TYPE IV

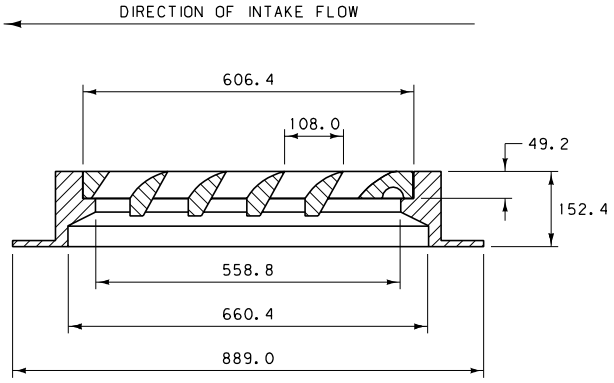

SECTION A-A

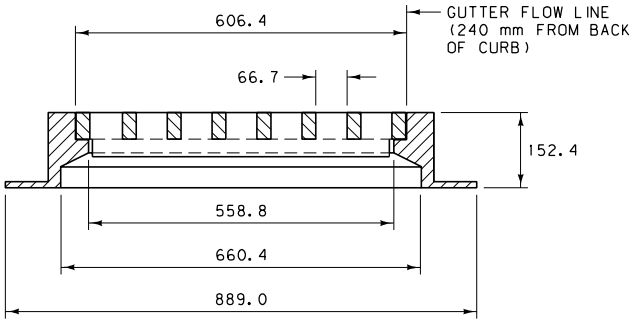

SECTION B-B

COMBINATION

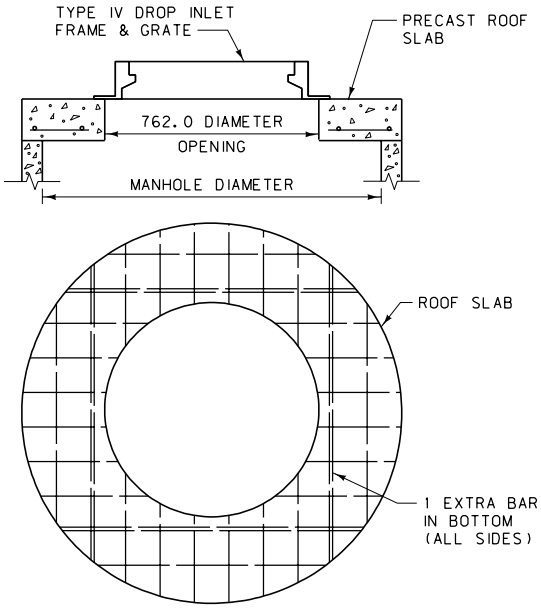

ROOF SLAB

SEE DETAILED DRAWING NO. 604-02 FOR DIAMETER, SLAB THICKNESS AND REINFORCING REQUIREMENTS FOR COMBINATION TYPE 3 MANHOLE, TYPE IV DROP INLET.

NOTE:
ALL CONCRETE IS CLASS "DD" OR APPROVED EQUAL.

ALL DIMENSIONS ARE MILLIMETERS (mm) UNLESS OTHERWISE NOTED.

DETAILED DRAWING	
REFERENCE STANDARD SPEC. SECTION 604	DWG. NO. 604-04
DROP INLET TYPE IV	
EFFECTIVE: FEBRUARY 2005	

serving you with pride — MONTANA DEPARTMENT OF TRANSPORTATION

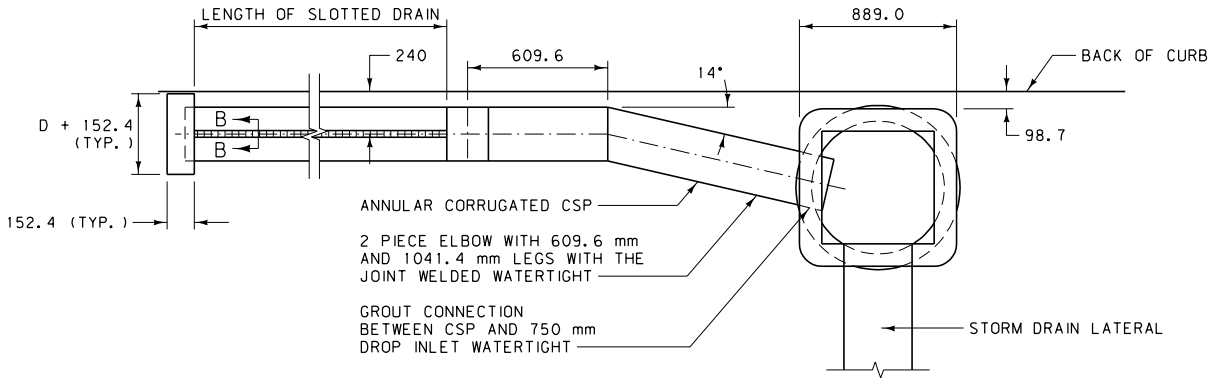

PLAN

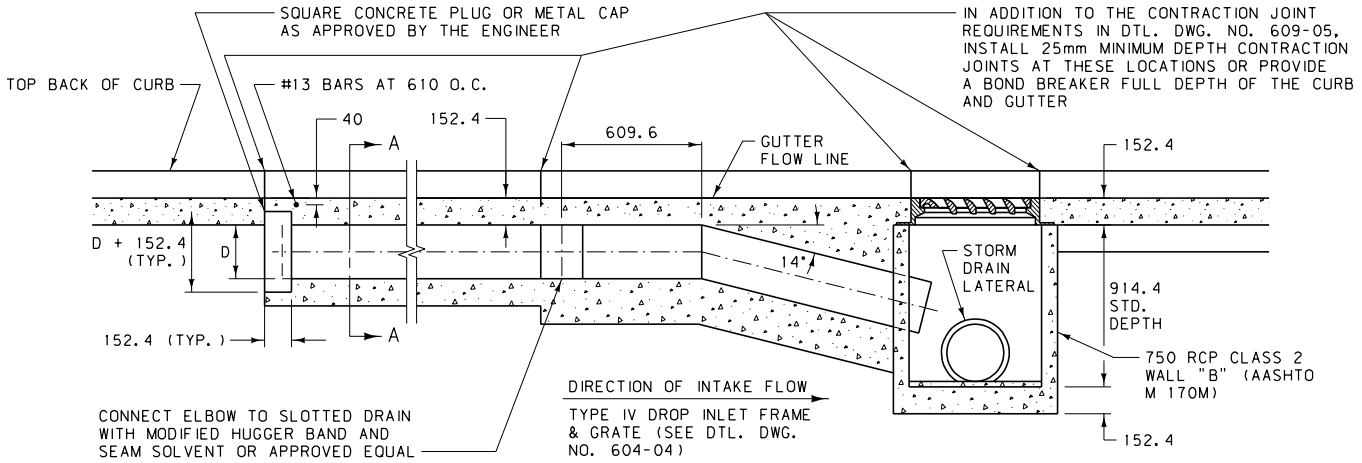

ELEVATION

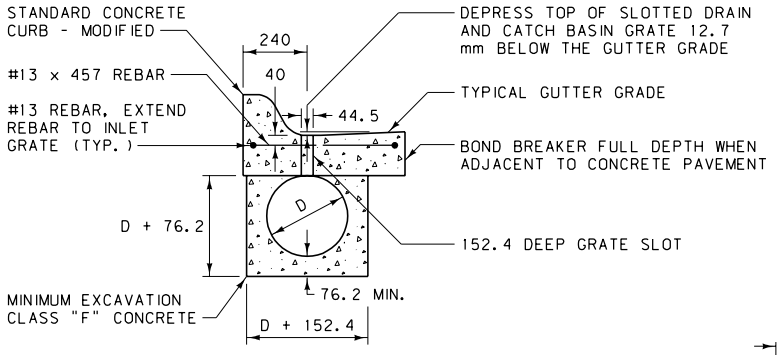

SECTION A-A

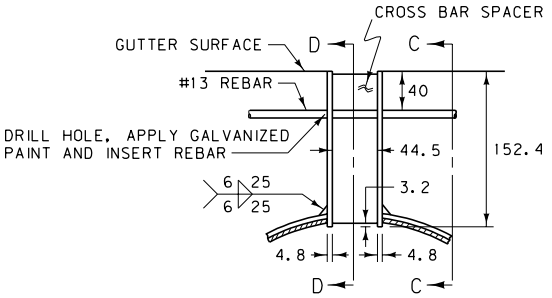

SECTION B-B

GRATE SLOT DETAIL

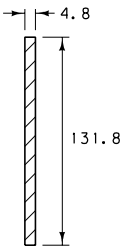

SECTION D-D

CROSS BAR SPACER

NOTES:

PAINT ALL WELDS AND OTHER NON-GALVANIZED PARTS, EXCEPT REBAR IN ACCORDANCE WITH STD. SPEC. SECTION 710.

USE A 6.8 OR 13.6 KILOGRAM ROOFING FELT MATERIAL, OR OTHER PRODUCT AS APPROVED BY THE ENGINEER, FOR A BOND BREAKER.

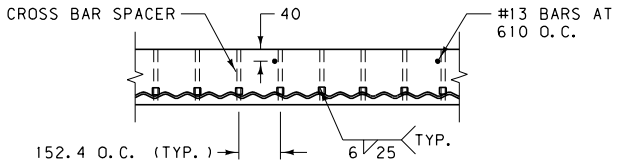

SECTION C-C

GRATE SLOT WELDING DETAIL

ALL DIMENSIONS ARE MILLIMETERS (mm) UNLESS OTHERWISE NOTED.

DETAILED DRAWING	
REFERENCE STANDARD SPEC. SECTION 604	DWG. NO. 604-06
TYPE IV DROP INLET WITH SLOTTED DRAIN	
EFFECTIVE: FEBRUARY 2005	

MDT serving you with pride — MONTANA DEPARTMENT OF TRANSPORTATION

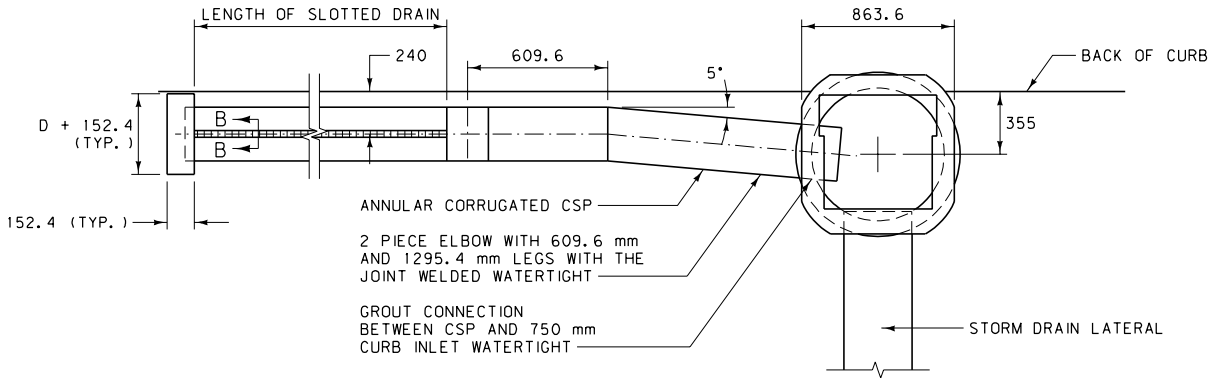

PLAN

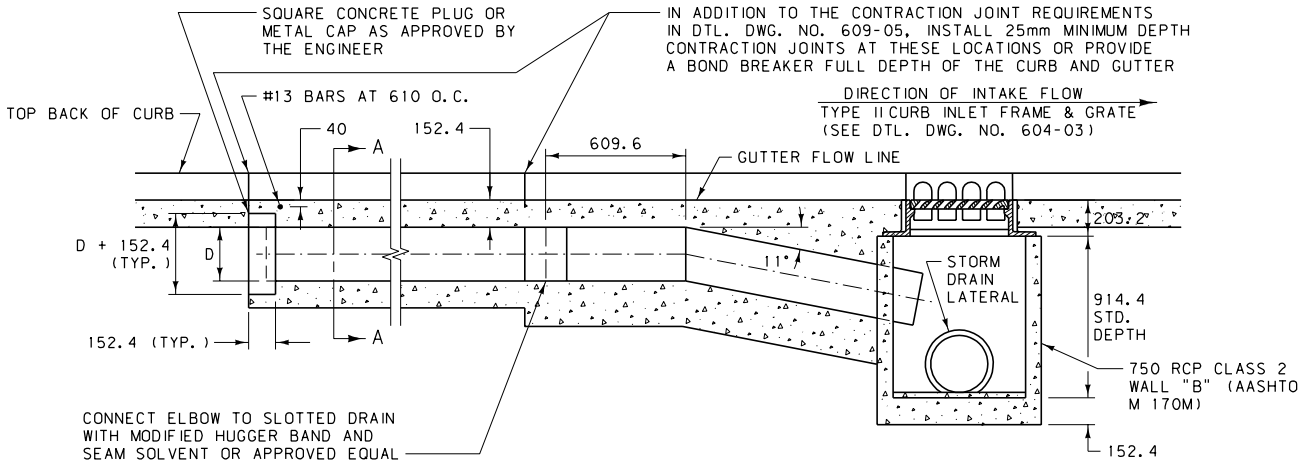

ELEVATION

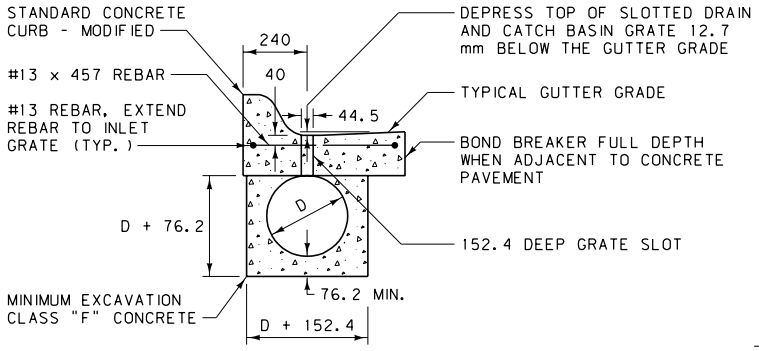

SECTION A-A

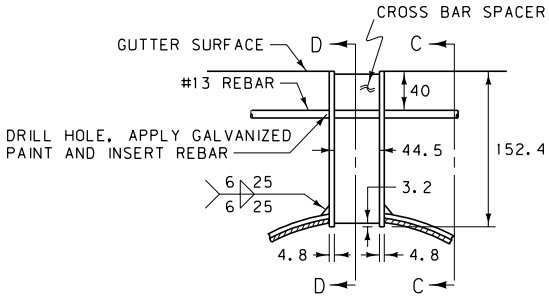

SECTION B-B

GRATE SLOT DETAIL

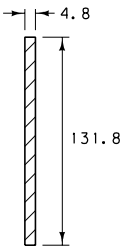

SECTION D-D

CROSS BAR SPACER

NOTES:

PAINT ALL WELDS AND OTHER NON-GALVANIZED PARTS, EXCEPT REBAR IN ACCORDANCE WITH STD. SPEC. SECTION 710.

USE A 6.8 OR 13.6 KILOGRAM ROOFING FELT , MATERIAL, OR OTHER PRODUCT AS APPROVED BY THE ENGINEER, FOR A BOND BREAKER.

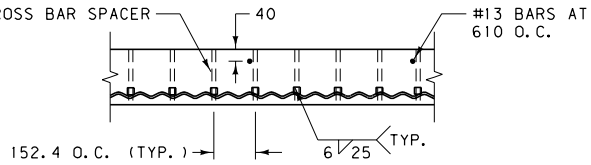

SECTION C-C

GRATE SLOT WELDING DETAIL

ALL DIMENSIONS ARE MILLIMETERS (mm) UNLESS OTHERWISE NOTED.

DETAILED DRAWING	
REFERENCE STANDARD SPEC. SECTION 604	DWG. NO. 604-08
TYPE II CURB INLET WITH SLOTTED DRAIN	
EFFECTIVE: FEBRUARY 2005	

MDT serving you with pride — MONTANA DEPARTMENT OF TRANSPORTATION

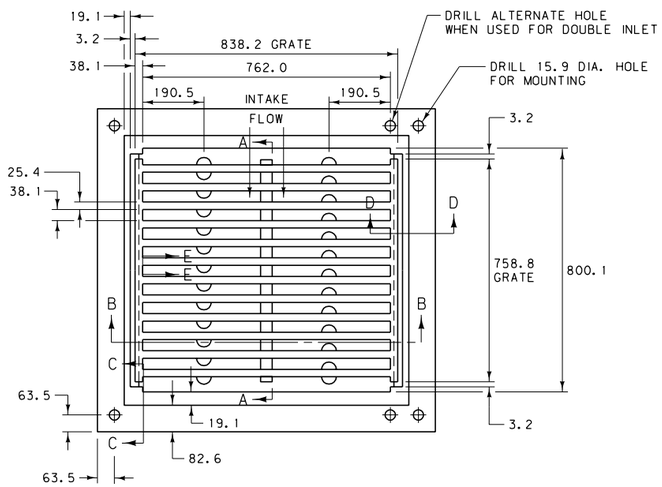

PLAN

NOTE: INSTALL GRATE WITH BARS PERPENDICULAR TO INTAKE FLOW

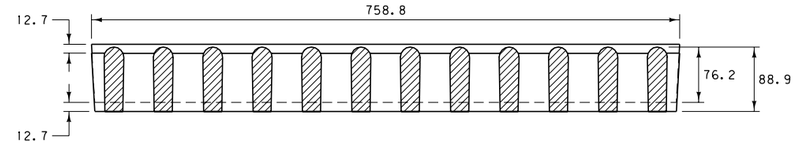

SECTION A-A

GRATE

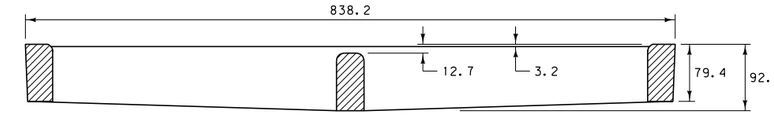

SECTION B-B

GRATE

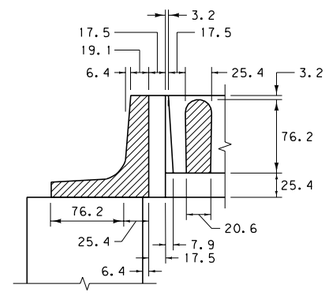

SECTION C-C

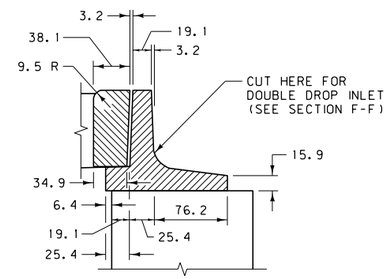

SECTION D-D

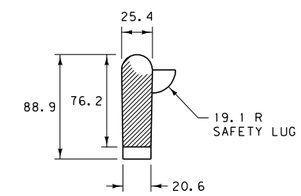

SECTION E-E

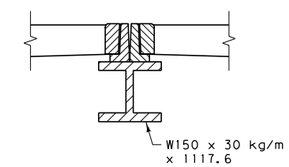

SECTION F-F

(FOR DOUBLE INLET)

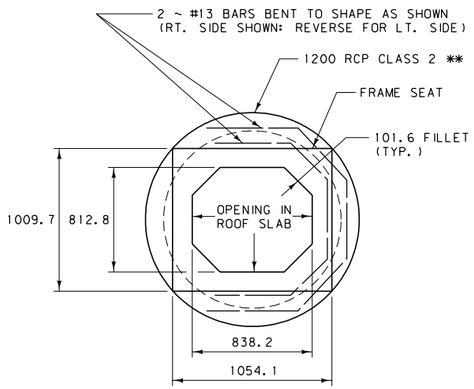

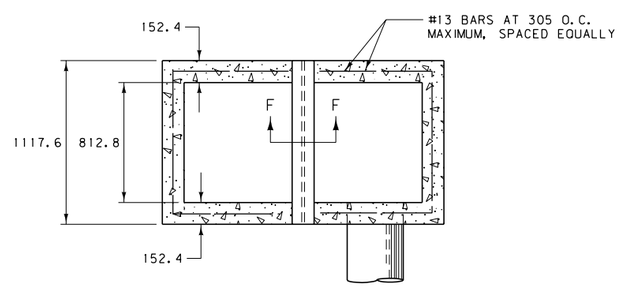

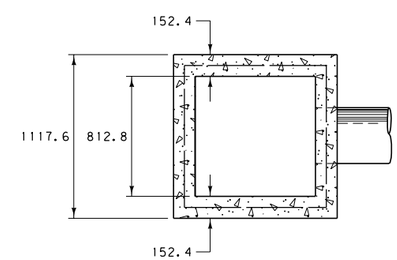

QUANTITIES *		
	CONCRETE	REINF. STL.
TYPE I	0.344 m³	18.1 kg
TYPE II	1.147 m³	65.8 kg
TYPE III	0.765 m³	40.8 kg

* FOR ESTIMATING PURPOSES ONLY

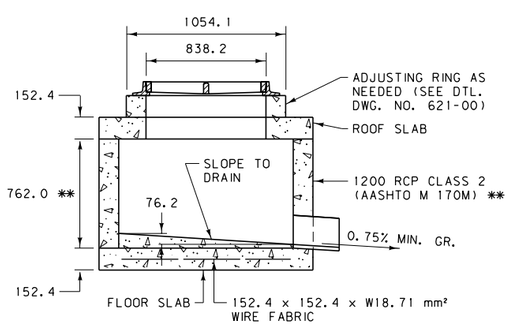

ROUND, SINGLE DROP INLET

TYPE I

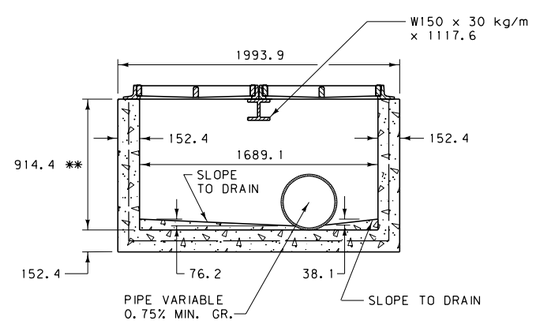

DOUBLE DROP INLET

TYPE II

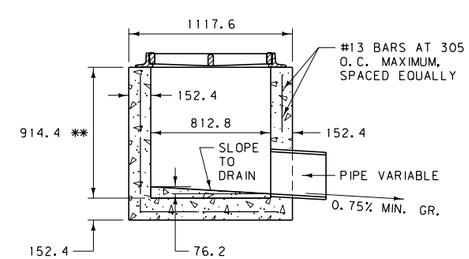

SINGLE DROP INLET

TYPE III

NOTES:

USE TYPE I, TYPE II AND TYPE III DROP INLETS IN SAG LOCATIONS ONLY.

ALL CONCRETE IS CLASS "DD" OR APPROVED EQUAL.

SEE PLANS FOR DETAILS AND QUANTITIES.

** STANDARD UNLESS OTHERWISE NOTED ON PLANS.

ALL DIMENSIONS ARE MILLIMETERS (mm) UNLESS OTHERWISE NOTED.

DETAILED DRAWING	
REFERENCE STANDARD SPEC. SECTION 604	DWG. NO. 604-14
DROP INLETS	
EFFECTIVE: FEBRUARY 2005	

serving you with pride — MONTANA DEPARTMENT OF TRANSPORTATION

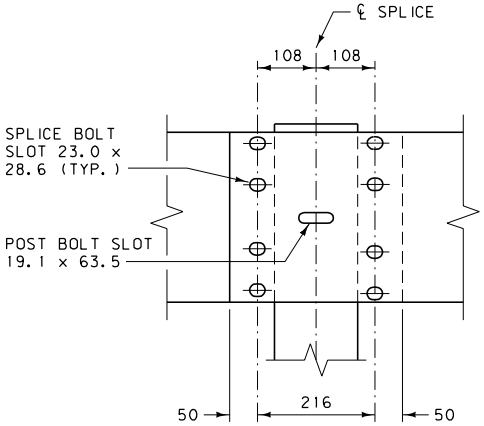

BEAM SPLICE

(LAP IN DIRECTION OF ADJACENT TRAFFIC)

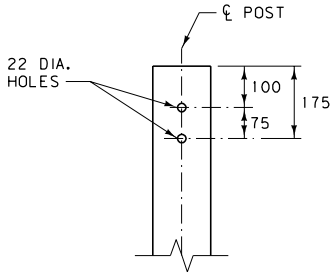

POST HOLE DETAIL

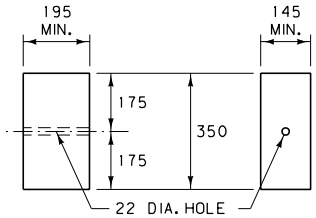

WOOD BLOCK

PDB01✱

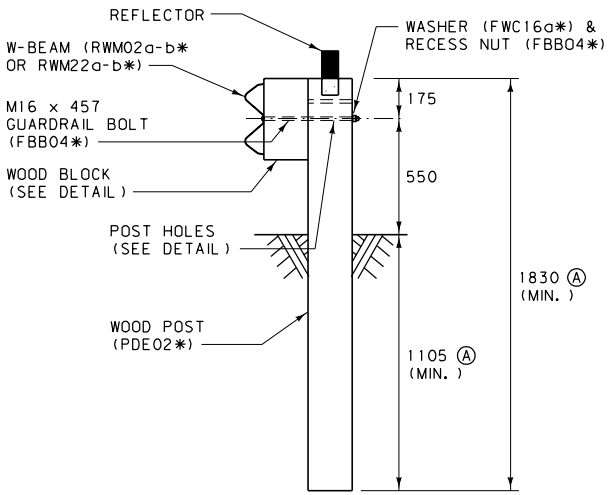

WOOD POST AND MOUNTING DETAIL

Ⓐ STANDARD UNLESS SPECIFIED OTHERWISE IN PLANS.

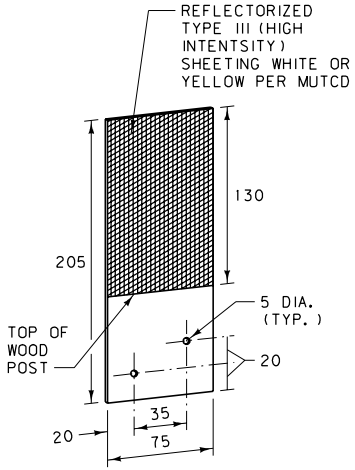

REFLECTOR

(SEE NOTES)

NOTES:

① INSTALL ALL BOLTS WITH HEADS ON TRAFFIC SIDE OF INSTALLATION.

② USE WOOD BLOCKS OR OTHER NCHRP 350 APPROVED BLOCKS. AFFIX WOOD BLOCKS TO POSTS WITH TWO 16 PENNY GALV. NAILS OR 14 GAGE WIRE WRAP.

③ ATTACH REFLECTORS TO POSTS EVERY 7.62 m, INCLUDING TERMINAL SECTIONS, WITH THE REFLECTORIZED SURFACE FACING ADJACENT TRAFFIC. FABRICATE REFLECTORS FROM 1.6 mm THICK ALUMINUM ALLOY MEETING THE REQUIREMENTS OF STD. SPEC. 704. FASTEN REFLECTOR TO WOOD POST USING TWO 16 PENNY RING-SHANKED GALVANIZED NAILS AND TWO 4.8 mm DIA. WASHERS IN PRE-DRILLED HOLES.

④ ON EXISTING GUARDRAIL INSTALLATIONS, THE MINIMUM RAIL HEIGHT IS 460 mm.

⑤ WIDENING IS REQUIRED IF FINISHED SHOULDER IS LESS THAN 0.6 m FROM TRAFFIC LANE.

✱ SEE DTL. DWG. NO. 606-80 FOR SCHEDULE OF GUARDRAIL HARDWARE.

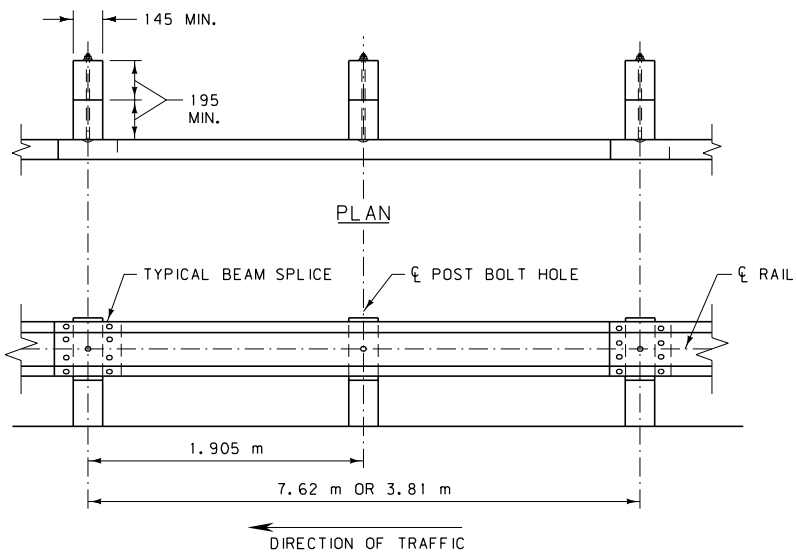

TYPICAL INSTALLATION

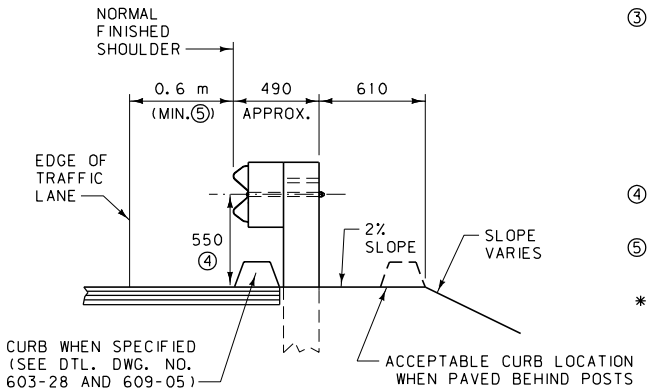

ALL DIMENSIONS ARE MILLIMETERS (mm) UNLESS OTHERWISE NOTED.

DETAILED DRAWING	
REFERENCE STANDARD SPEC. SECTION 606	DWG. NO. 606-05A
METAL GUARDRAIL - WOOD POSTS	
EFFECTIVE: FEBRUARY 2005	

MDT serving you with pride — MONTANA DEPARTMENT OF TRANSPORTATION

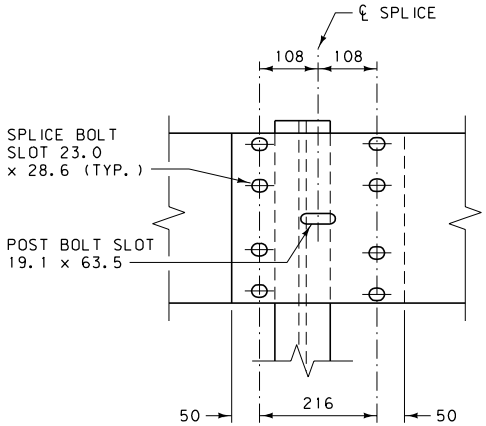

BEAM SPLICE

(LAP IN DIRECTION OF ADJACENT TRAFFIC)

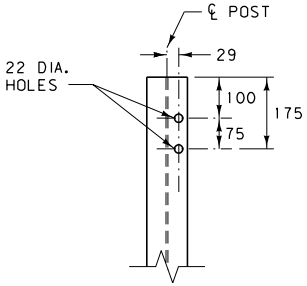

POST HOLE DETAIL

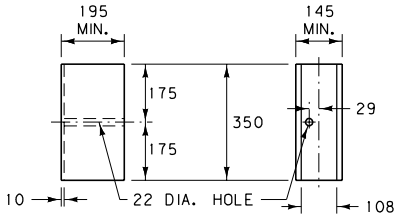

ROUTED WOOD BLOCK

PDB01*

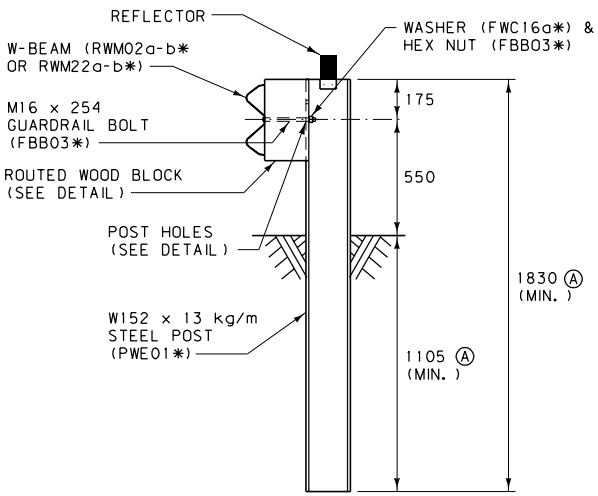

STEEL POST AND MOUNTING DETAIL

Ⓐ STANDARD UNLESS SPECIFIED OTHERWISE IN PLANS.

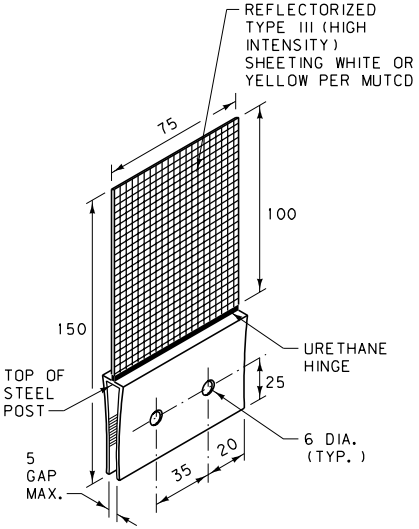

REFLECTOR

(SEE NOTES)

NOTES:

1. INSTALL ALL BOLTS WITH HEADS ON TRAFFIC SIDE OF INSTALLATION.
2. USE ROUTED WOOD BLOCKS OR OTHER NCHRP 350 APPROVED BLOCKS.
3. ATTACH REFLECTORS TO POSTS EVERY 7.62 m, INCLUDING TERMINAL SECTIONS, WITH THE REFLECTORIZED SURFACE FACING ADJACENT TRAFFIC. FASTEN REFLECTOR TO STEEL POST USING AN APPROVED ADHESIVE. REFLECTORS MAY BE BOLTED TO POSTS PROVIDED HOLES IN POST ARE DRILLED BEFORE BEING GALVANIZED.
4. ON EXISTING GUARDRAIL INSTALLATIONS, THE MINIMUM RAIL HEIGHT IS 460 mm.
5. WIDENING IS REQUIRED IF FINISHED SHOULDER IS LESS THAN 0.6 m FROM THE THE TRAFFIC LANE.
6. STEEL POSTS WITH OTHER HOLE CONFIGURATIONS MAY BE ACCEPTED, PROVIDED THEY HAVE AT LEAST THE HOLES DETAILED ON THIS DRAWING AND THEY MEET AASHTO'S PUBLICATION, "A GUIDE TO STANDARDIZED HIGHWAY BARRIER HARDWARE" AND NCHRP 350 REQUIREMENTS.

* SEE DTL. DWG. NO. 606-80 FOR SCHEDULE OF GUARDRAIL HARDWARE.

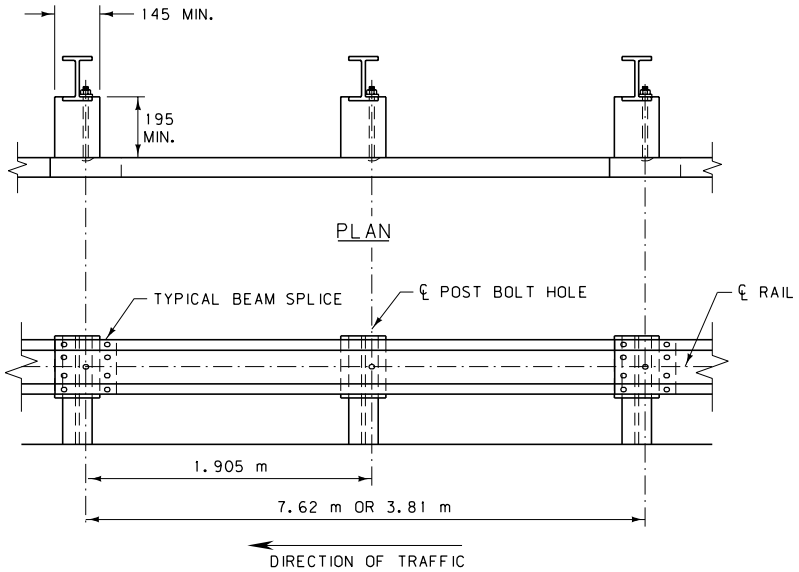

ELEVATION

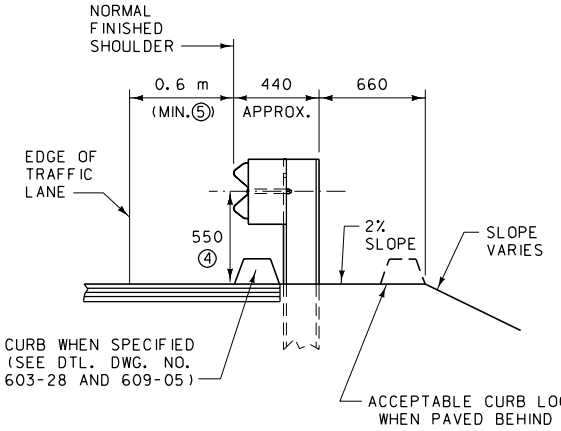

TYPICAL INSTALLATION

ALL DIMENSIONS ARE MILLIMETERS (mm) UNLESS OTHERWISE NOTED.

DETAILED DRAWING	
REFERENCE STANDARD SPEC. SECTION 606	DWG. NO. 606-05B
METAL GUARDRAIL - STEEL POSTS	
EFFECTIVE: FEBRUARY 2005	
serving you with pride	MONTANA DEPARTMENT OF TRANSPORTATION

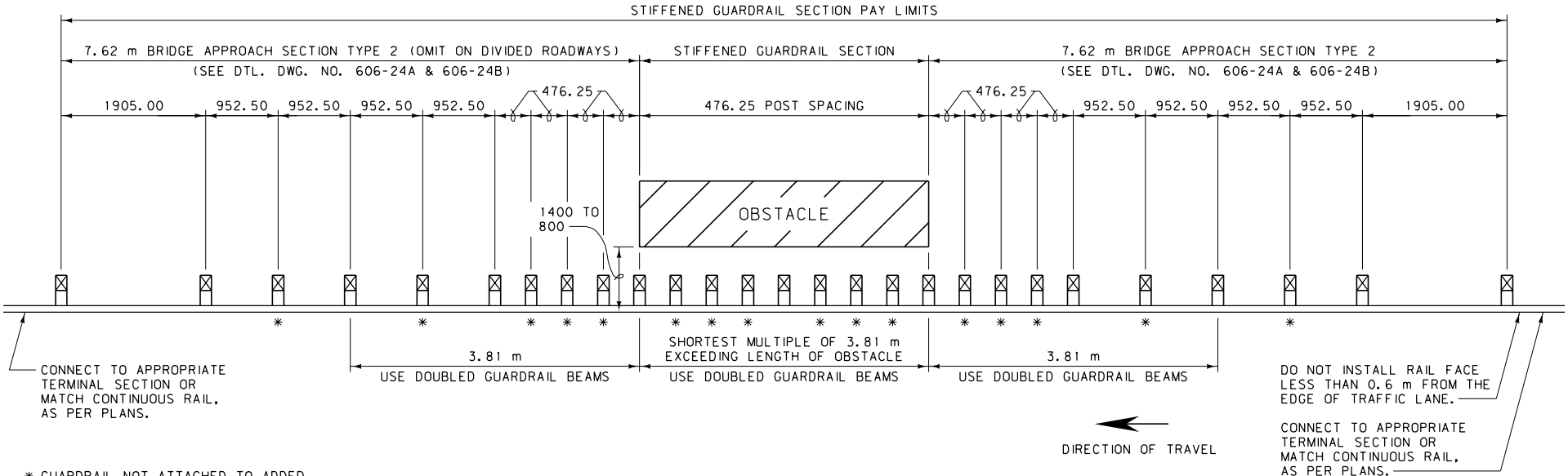

LINE OBSTACLE APPLICATION

* GUARDRAIL NOT ATTACHED TO ADDED POSTS. BLOCK-OUT FASTENED TO POST WITH STANDARD POST BOLT.

GUARDRAIL ATTACHED TO POSTS ONLY AT STANDARD MULTIPLES OF 1.905 m THROUGH OBSTACLE SECTION.

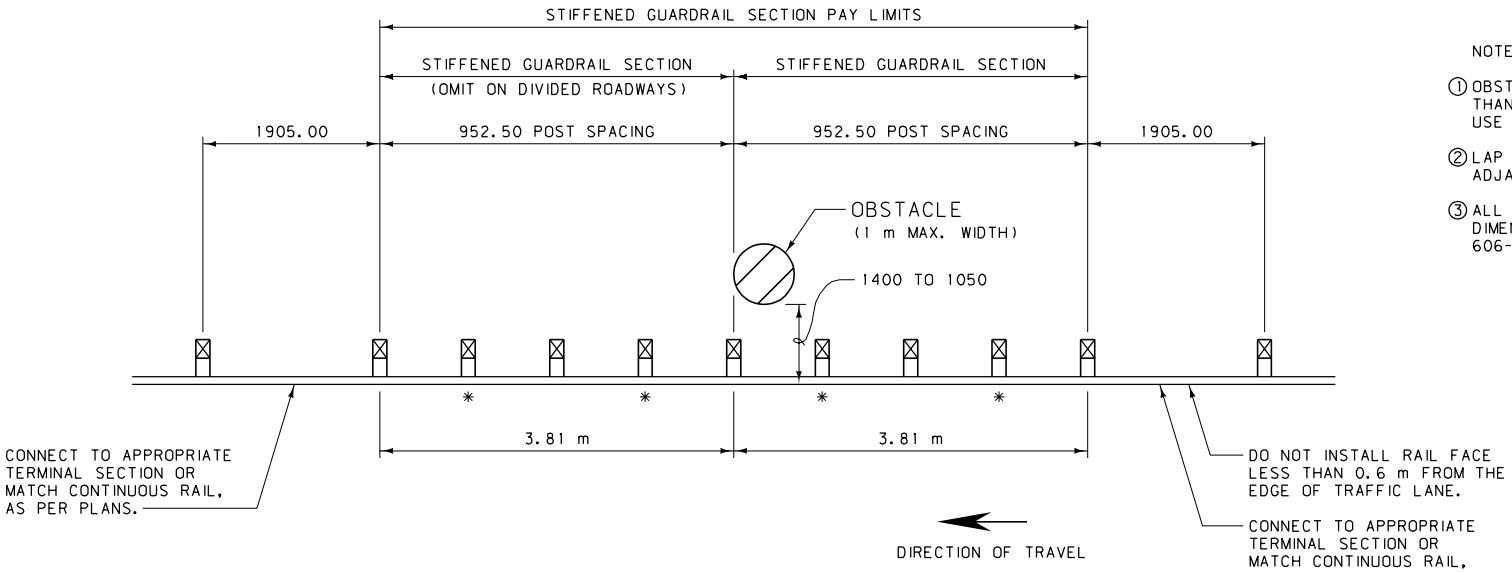

POINT OBSTACLE APPLICATION

NOTES:

1. OBSTACLES CLOSER TO THE FACE OF RAIL THAN THE INDICATED LIMITS REQUIRE THE USE OF CONCRETE BARRIER RAIL.
2. LAP ALL DOUBLED RAIL IN THE DIRECTION OF ADJACENT TRAFFIC.
3. ALL POSTS AND BLOCKS ARE STANDARD DIMENSIONS AS PER DETAILED DRAWING NO. 606-05A AND 606-05B.

ALL DIMENSIONS ARE MILLIMETERS (mm) UNLESS OTHERWISE NOTED.

DETAILED DRAWING	
REFERENCE STANDARD SPEC. SECTION 606	DWG. NO. 606-07
STIFFENED GUARDRAIL SECTIONS	
EFFECTIVE: FEBRUARY 2005	

MDT serving you with pride — MONTANA DEPARTMENT OF TRANSPORTATION

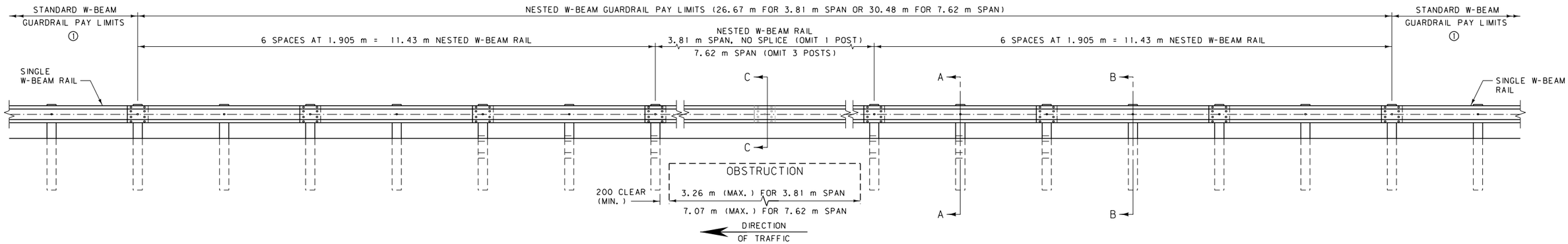

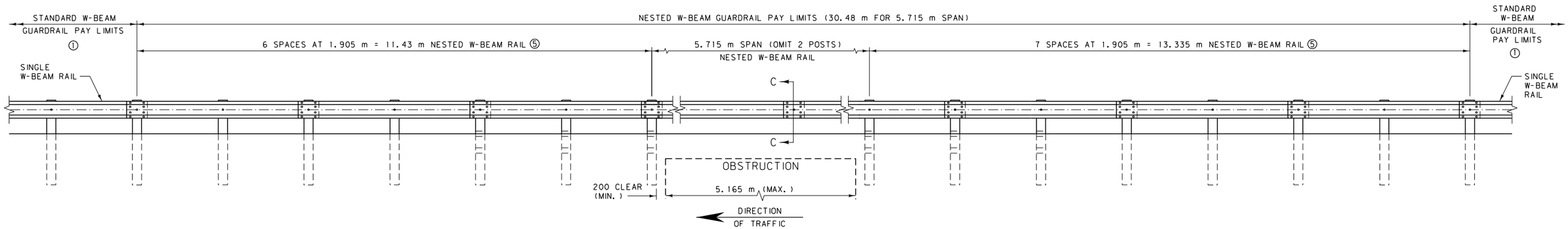

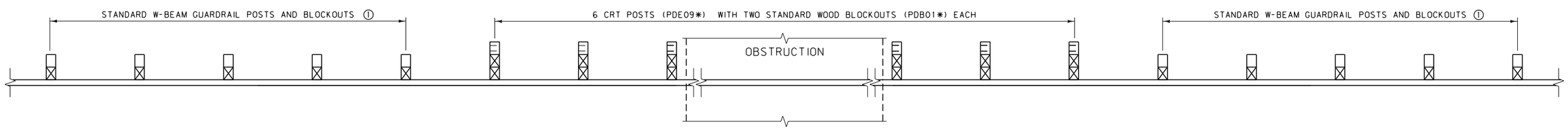

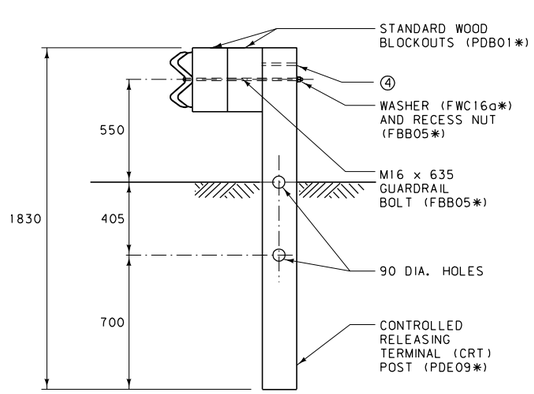

SECTION A-A

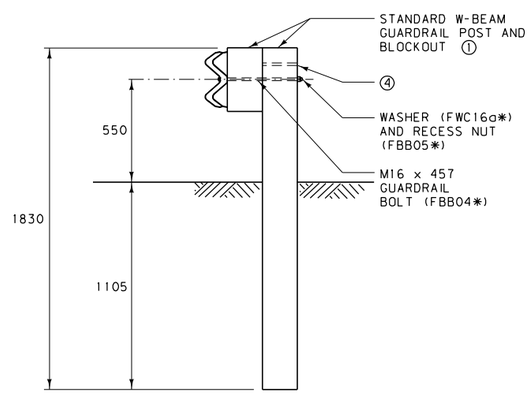

SECTION B-B

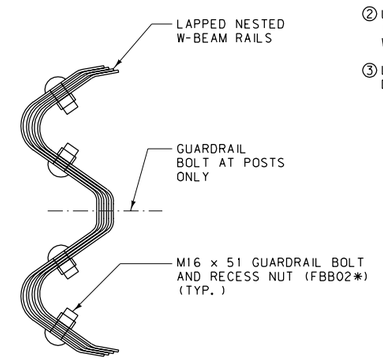

SECTION C-C

NOTES:

① SEE DTL. DWG. NO. 606-05A AND 606-05B FOR STANDARD W-BEAM GUARDRAIL AND ASSOCIATED HARDWARE.

② USE TWO STANDARD W-BEAM RAILS (RWM02a-b* OR RWM22a-b*) FOR NESTED W-BEAM.

③ LAP ALL NESTED W-BEAM RAIL IN THE DIRECTION OF ADJACENT TRAFFIC.

④ ALL POSTS ARE TO HAVE A SECOND BOLT HOLE AT 75 ABOVE THE FIRST.

⑤ THE SPLICE LOCATIONS ON THE 5.175 m SPAN MAY BE SHIFTED DOWNSTREAM BY 1.905 m.

⑥ KEEP THE AREA WITHIN 1.5 m FROM THE BACK OF THE RAIL CLEAR OF ANY FIXED-OBJECT HAZARDS.

* SEE DTL. DWG. NO. 606-80 FOR SCHEDULE OF GUARDRAIL HARDWARE.

ALL DIMENSIONS ARE MILLIMETERS (mm) UNLESS OTHERWISE NOTED.

DETAILED DRAWING	
REFERENCE STANDARD SPEC. SECTION 606	DWG. NO. 606-09
NESTED W-BEAM GUARDRAIL	
EFFECTIVE: FEBRUARY 2005	
serving you with pride	MONTANA DEPARTMENT OF TRANSPORTATION

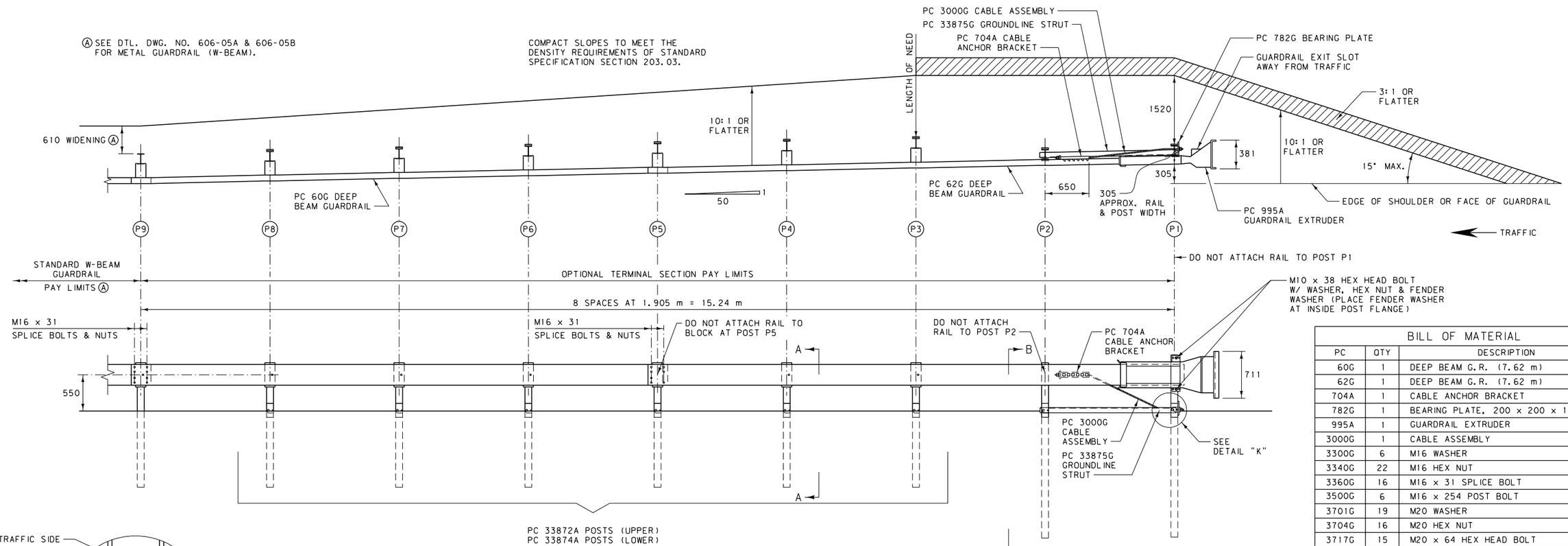

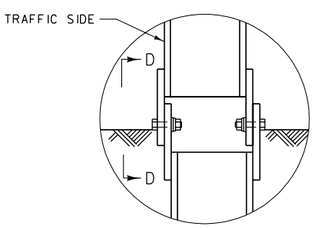

DETAIL D

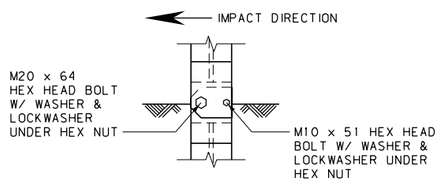

VIEW D-D

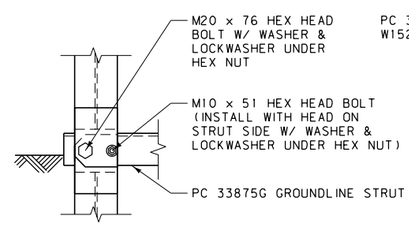

VIEW H-H

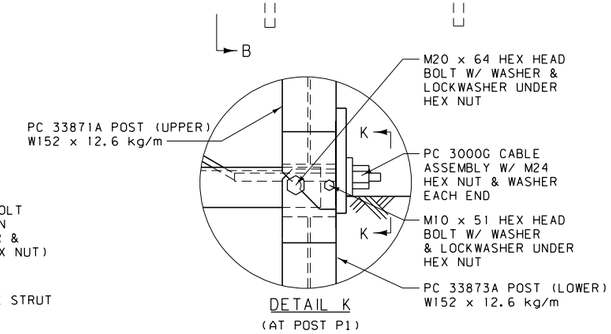

DETAIL K
(AT POST P1)

BILL OF MATERIAL		
PC	QTY	DESCRIPTION
60G	1	DEEP BEAM G.R. (7.62 m)
62G	1	DEEP BEAM G.R. (7.62 m)
704A	1	CABLE ANCHOR BRACKET
782G	1	BEARING PLATE, 200 x 200 x 16
995A	1	GUARDRAIL EXTRUDER
3000G	1	CABLE ASSEMBLY
3300G	6	M16 WASHER
3340G	22	M16 HEX NUT
3360G	16	M16 x 31 SPLICE BOLT
3500G	6	M16 x 254 POST BOLT
3701G	19	M20 WASHER
3704G	16	M20 HEX NUT
3717G	15	M20 x 64 HEX HEAD BOLT
3718G	1	M20 x 76 HEX HEAD BOLT
3900G	2	M24 WASHER
3910G	2	M24 HEX NUT
4076B	6	WOOD BLOCK, 150 x 200 x 350
4254G	18	M10 WASHER
4255G	2	M10 FENDER WASHER (38 O.D.)
4258G	16	M10 LOCKWASHER
4261G	2	M10 x 38 HEX HEAD BOLT
4699G	16	M20 LOCKWASHER
6321G	16	M10 x 51 HEX HEAD BOLT
6405G	18	M10 HEX NUT
33871A	1	ETPLUS HBA POST P1 (UPPER)
33872A	7	ETPLUS HBA POST P2 TO P8 (UPPER)
33873A	2	ETPLUS HBA POST P1 & P2 (LOWER)
33874A	6	ETPLUS HBA POST P3 TO P8 (LOWER)
33875G	1	1981 ANGLE STRUT ET HBA

NOTE:

SECTION "A-A" IS SIMILAR AT POST P5 EXCEPT RAIL IS NOT ATTACHED.

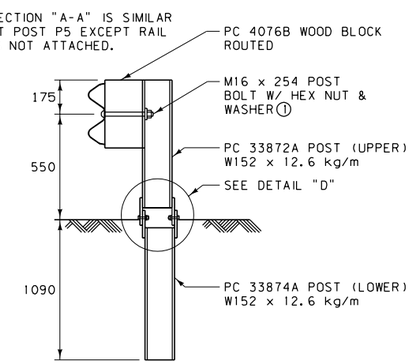

SECTION A-A
(TYP AT POSTS P3, P4, P6, P7 & P8)

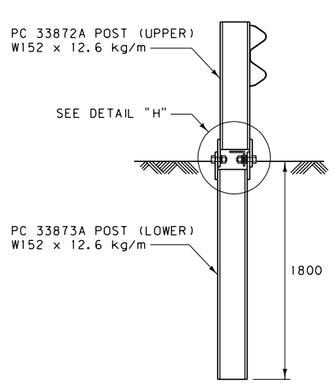

SECTION B-B
(AT POST P2)

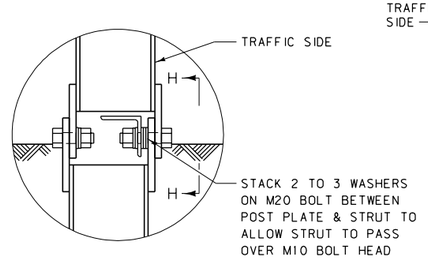

DETAIL H
(AT POST P2)

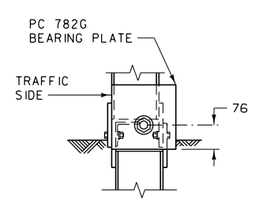

VIEW K-K

NOTES:

① THE M16 FLAT WASHER IS USED UNDER THE NUT, BEHIND THE POST ONLY. NO WASHER IS USED AT THE RAIL.

② USE THE ET-PLUS TERMINAL SECTION ON DIVIDED ROADWAYS IF THE WIDTH IS 7.5 m OR GREATER BETWEEN FINISHED SURFACES. CONSIDER OTHER TERMINAL SECTIONS IF THE WIDTH IS LESS THAN 7.5 m BETWEEN FINISHED SURFACES.

③ FLARE THE END SECTION AWAY FROM TRAFFIC AT A RATE OF 50:1 FOR 15.24 m (ILLUSTRATED). FLARES OF 50:1 FOR 30.48 m MAY ALSO BE USED. THE FLARE MAY BE OMITTED ON ROADS WITH SHOULDERS GREATER THAN 0.6 m IN WIDTH.

④ PLACE A SELF-ADHESIVE OBJECT MARKER ON THE GUARDRAIL EXTRUDER FACE, HAVING ALTERNATING RETRO-REFLECTIVE BLACK AND YELLOW STRIPES SLOPED DOWNWARD AT AN ANGLE OF 45° TOWARDS THE SIDE ON WHICH TRAFFIC IS TO PASS.

⑤ ATTACH REFLECTORS TO TERMINAL SECTION POSTS, PER DTL. DWG. NO. 606-05A & 606-05B.

⑥ AFTER FINAL ASSEMBLY, RECHECK CABLE TO MAKE SURE IT IS TAUT AND HAS NOT RELAXED.

⑦ OBTAIN ENGINEER'S APROVAL OF MANUFACTURER INSTALLATION OPTIONS WHEN SITE CONDITIONS PREVENT THE USE OF THE OPTION SHOWN ON THIS DETAIL.

⑧ LAP ALL W-BEAM SPLICES IN THE DIRECTION OF ADJACENT TRAFFIC.

ALL DIMENSIONS ARE MILLIMETERS (mm) UNLESS OTHERWISE NOTED.

DETAILED DRAWING

REFERENCE STANDARD SPEC. SECTION 606

DWG. NO. 606-13A

OPTIONAL TERMINAL SECTION - ET-PLUS

EFFECTIVE: FEBRUARY 2005

MDT serving you with pride — MONTANA DEPARTMENT OF TRANSPORTATION

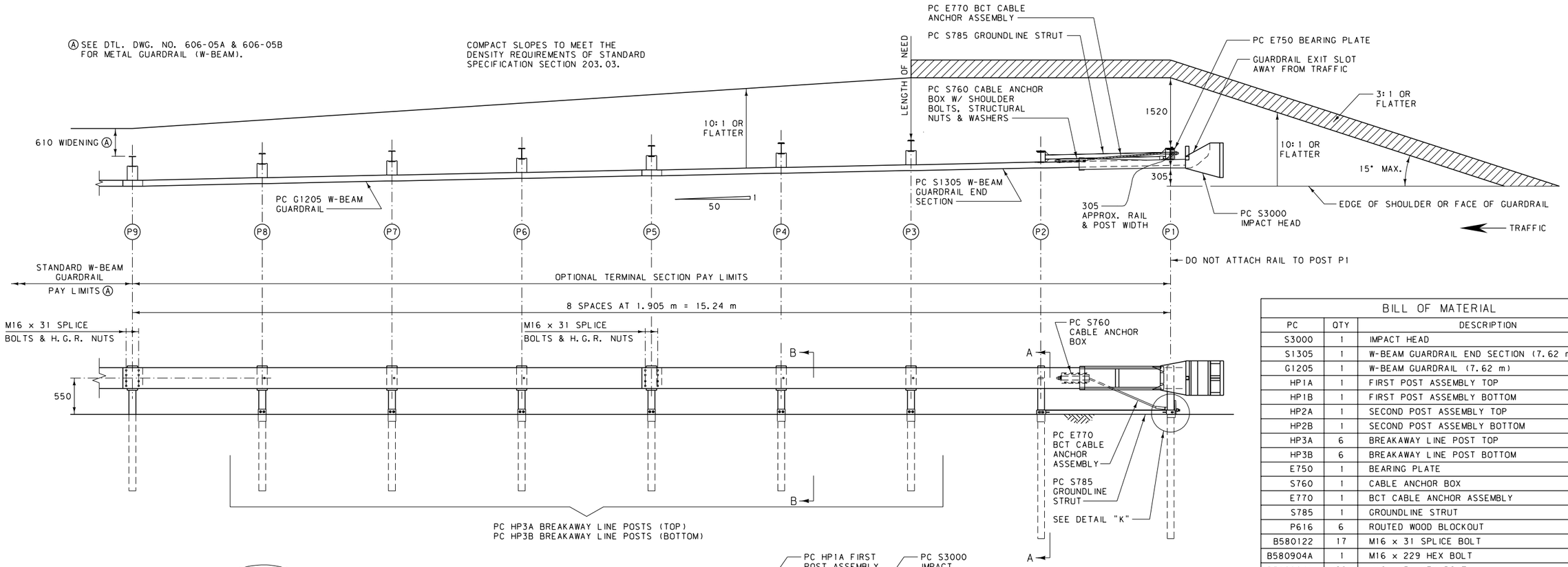

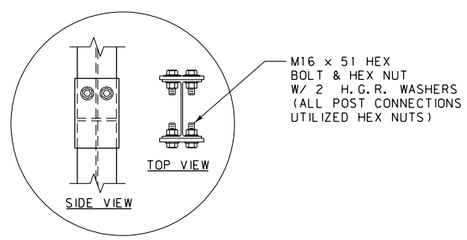

DETAIL D

(TYP. AT POSTS P2 THRU P8)

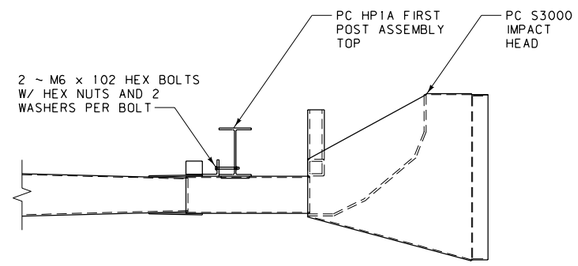

IMPACT HEAD CONNECTION DETAIL

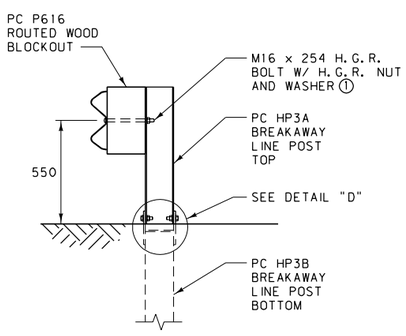

SECTION B-B

(TYP. AT POSTS P3 THRU P8)

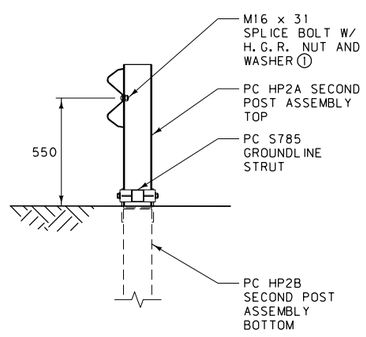

SECTION A-A

(AT POST P2)

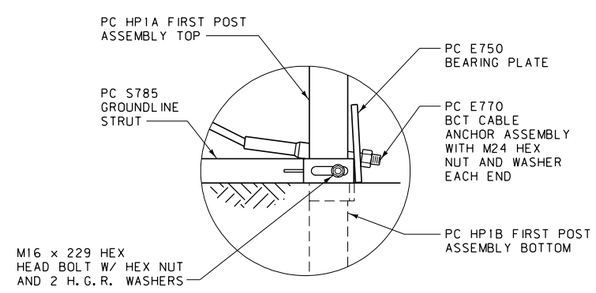

DETAIL K

(AT POST P1)

BILL OF MATERIAL

PC	QTY	DESCRIPTION
S3000	1	IMPACT HEAD
S1305	1	W-BEAM GUARDRAIL END SECTION (7.62 m)
G1205	1	W-BEAM GUARDRAIL (7.62 m)
HP1A	1	FIRST POST ASSEMBLY TOP
HP1B	1	FIRST POST ASSEMBLY BOTTOM
HP2A	1	SECOND POST ASSEMBLY TOP
HP2B	1	SECOND POST ASSEMBLY BOTTOM
HP3A	6	BREAKAWAY LINE POST TOP
HP3B	6	BREAKAWAY LINE POST BOTTOM
E750	1	BEARING PLATE
S760	1	CABLE ANCHOR BOX
E770	1	BCT CABLE ANCHOR ASSEMBLY
S785	1	GROUNDLINE STRUT
P616	6	ROUTED WOOD BLOCKOUT
B580122	17	M16 x 31 SPLICE BOLT
B580904A	1	M16 x 229 HEX BOLT
B580204A	28	M16 x 51 HEX BOLT
B581002	6	M16 x 254 H.G.R. BOLT
N055	29	M16 HEX NUT
N050	23	M16 H.G.R. NUT
W050	65	M16 H.G.R. WASHER
N100	2	M24 ANCHOR CABLE HEX NUT
W100	2	M24 ANCHOR CABLE WASHER
B140304	2	M6 x 102 HEX BOLT
N014	2	M6 HEX NUT
W014	4	M6 WASHER
SB58A	8	CABLE ANCHOR BOX SHOULDER BOLT
N055A	8	M12 A325 STRUCTURAL NUT
W050A	16	M14 (27 O.D.) A325 STRUCTURAL WASHER

NOTES:

① THE M16 H.G.R. WASHER IS USED UNDER THE NUT, BEHIND THE POST ONLY. NO WASHER IS USED AT THE RAIL.

② USE THE SKT 350 TERMINAL SECTION ON DIVIDED ROADWAYS IF THE WIDTH IS 7.5 m OR GREATER BETWEEN FINISHED SURFACES. CONSIDER OTHER TERMINAL SECTIONS IF THE WIDTH IS LESS THAN 7.5 m BETWEEN FINISHED SURFACES.

③ FLARE THE END SECTION AWAY FROM TRAFFIC AT A RATE OF 50:1 FOR 15.24 m (ILLUSTRATED). FLARES OF 50:1 FOR 30.48 m MAY ALSO BE USED. THE FLARE MAY BE OMITTED ON ROADS WITH SHOULDERS GREATER THAN 0.6 m IN WIDTH.

④ PLACE A SELF-ADHESIVE OBJECT MARKER ON THE GUARDRAIL IMPACT HEAD FACE, HAVING ALTERNATING RETRO-REFLECTIVE BLACK AND YELLOW STRIPES SLOPED DOWNWARD AT AN ANGLE OF 45° TOWARDS THE SIDE ON WHICH TRAFFIC IS TO PASS.

⑤ ATTACH REFLECTORS TO TERMINAL SECTION POSTS, PER DTL. DWG. NO. 606-05A & 606-05B.

⑥ AFTER FINAL ASSEMBLY, RECHECK CABLE TO MAKE SURE IT IS TAUT AND HAS NOT RELAXED.

⑦ OBTAIN ENGINEER'S APPROVAL OF MANUFACTURER INSTALLATION OPTIONS WHEN SITE CONDITIONS PREVENT THE USE OF THE OPTION SHOWN ON THIS DETAIL.

⑧ LAP ALL W-BEAM SPLICES IN THE DIRECTION OF ADJACENT TRAFFIC.

ALL DIMENSIONS ARE MILLIMETERS (mm) UNLESS OTHERWISE NOTED.

DETAILED DRAWING

REFERENCE STANDARD SPEC. SECTION 606

DWG. NO. 606-13B

OPTIONAL TERMINAL SECTION - SKT 350

EFFECTIVE: FEBRUARY 2005

MDT serving you with pride

MONTANA DEPARTMENT OF TRANSPORTATION

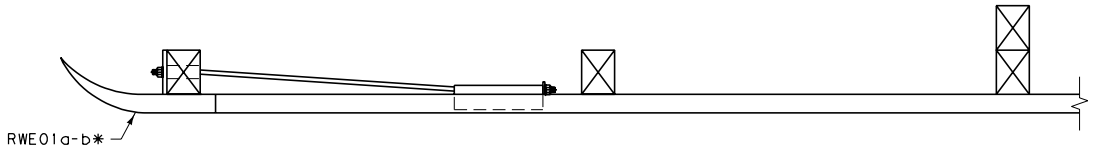

PLAN

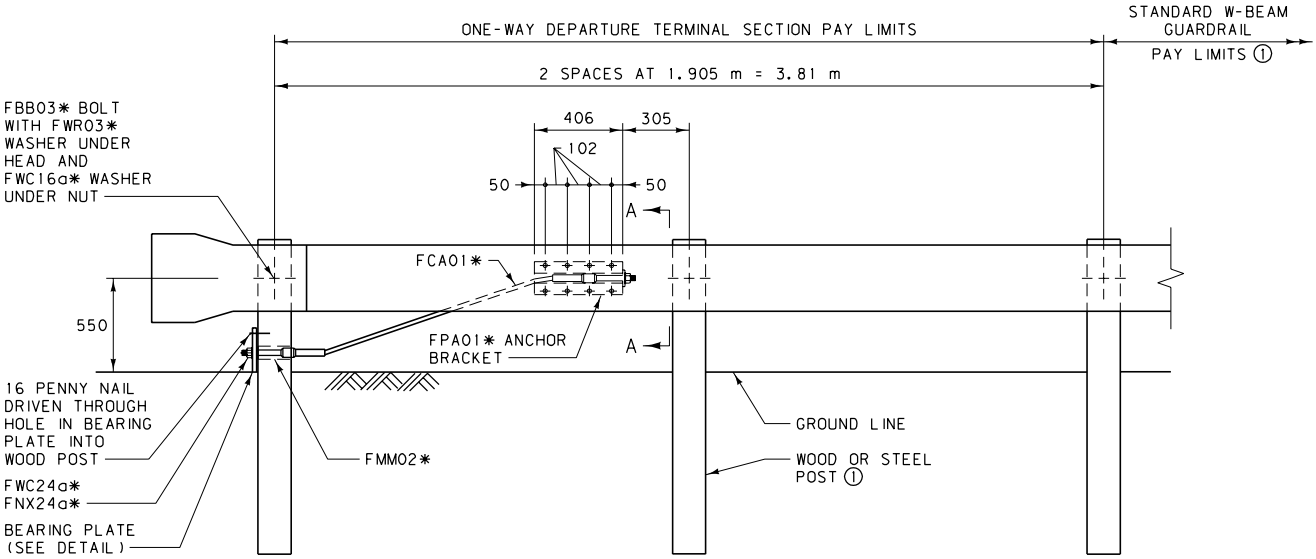

ELEVATION

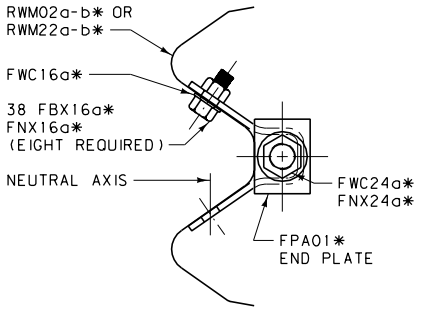

SECTION A-A

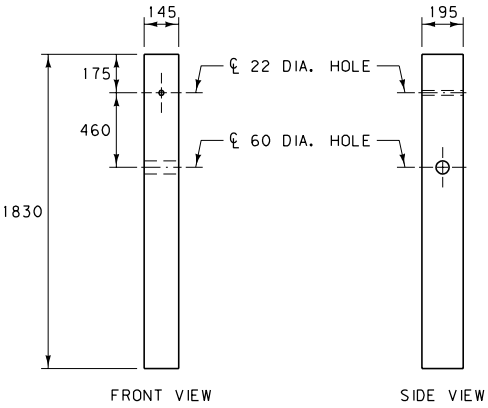

END POST DETAILS

PDF03*

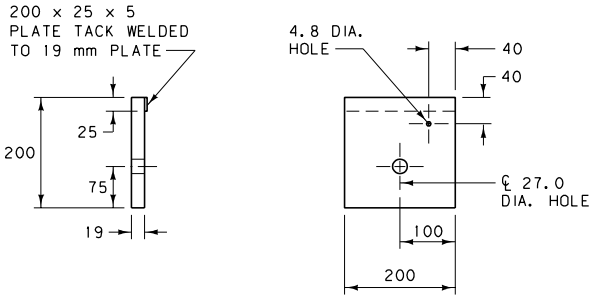

BEARING PLATE DETAIL

FPB01*

ALL DIMENSIONS ARE MILLIMETERS (mm) UNLESS OTHERWISE NOTED.

NOTES:

① SEE DTL. DWG. NO. 606-05A AND 606-05B FOR METAL GUARDRAIL (W-BEAM).

* SEE DTL. DWG. NO. 606-80 FOR SCHEDULE OF GUARDRAIL HARDWARE.

DETAILED DRAWING	
REFERENCE STANDARD SPEC. SECTION 606	DWG. NO. 606-18
ONE-WAY DEPARTURE TERMINAL SECTION	
EFFECTIVE: FEBRUARY 2005	
serving you with pride	MONTANA DEPARTMENT OF TRANSPORTATION

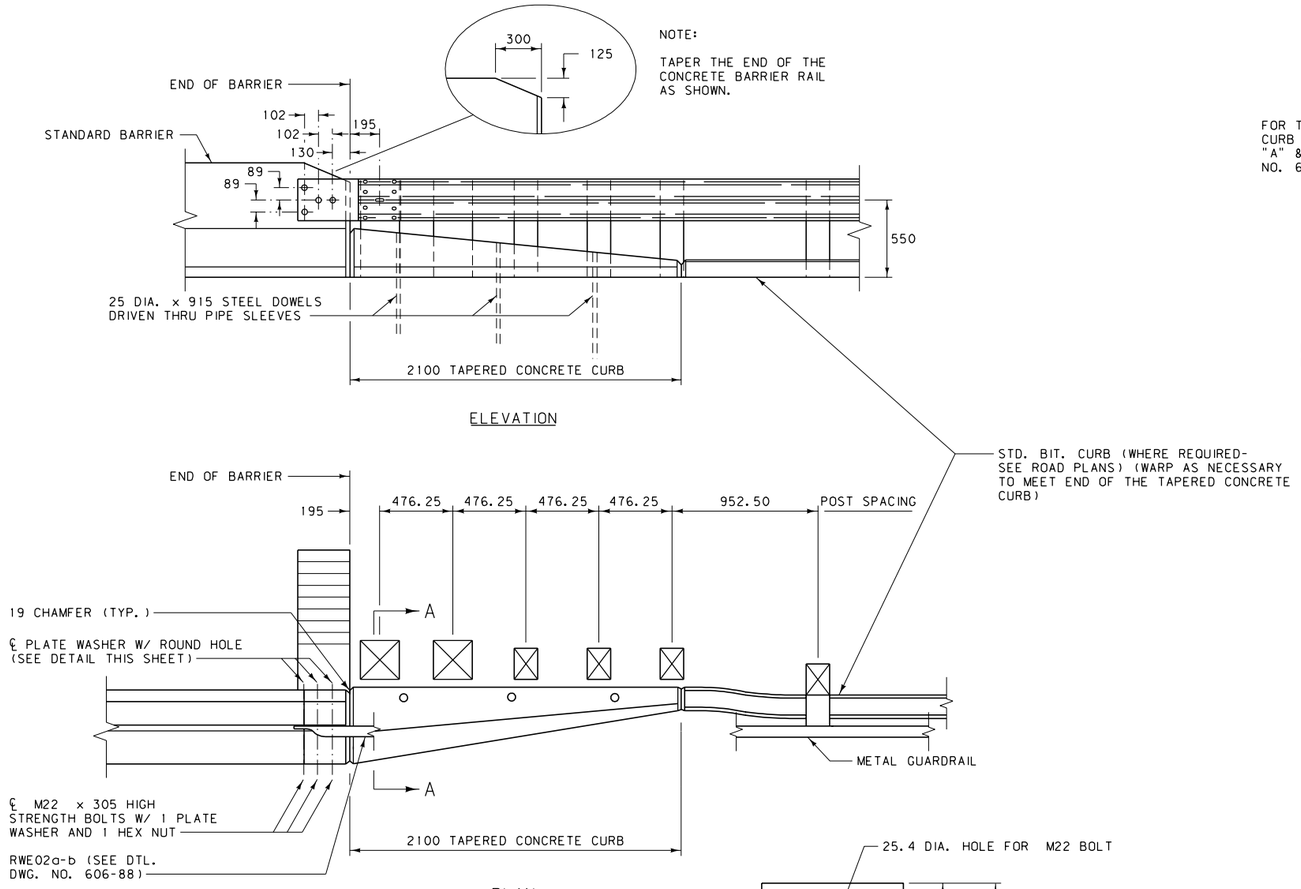

DETAIL "A"

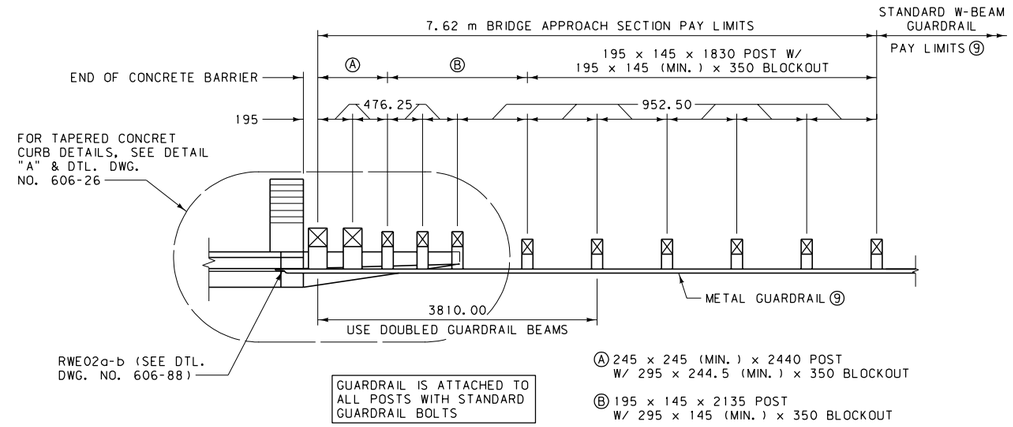

METAL GUARDRAIL-BRIDGE APPROACH SECTION TYPE 1

(FOR BRIDGES USING CONCRETE BARRIER RAIL)

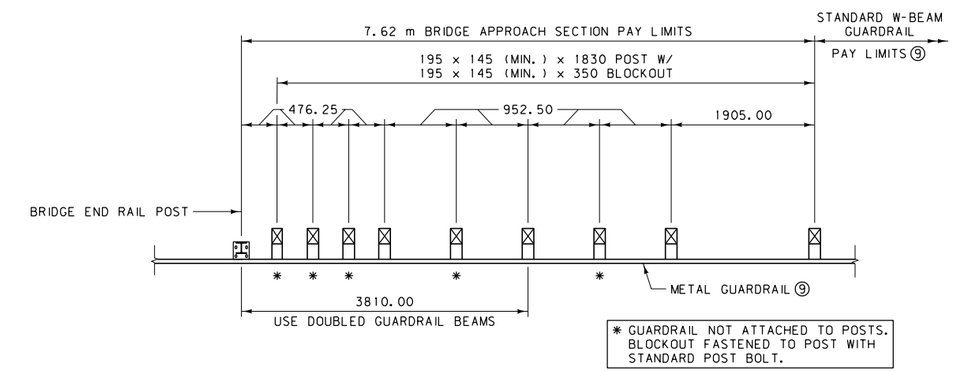

METAL GUARDRAIL-BRIDGE APPROACH SECTION TYPE 2

(FOR BRIDGES WITHOUT CURBS)

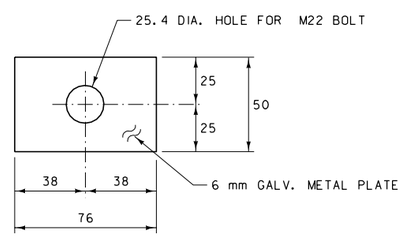

PLATE WASHER

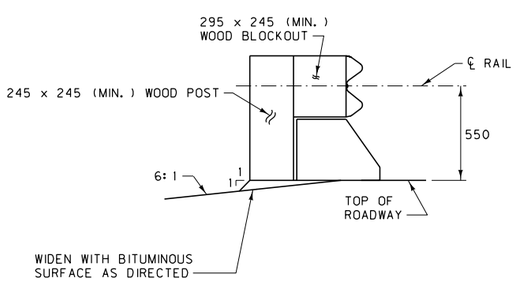

SECTION A-A

NOTES:

① TAPERED CONCRETE CURBS:
TYPE 1, SEE DTL. DWG. NO. 606-26
TYPE 3, SEE DTL. DWG. NO. 606-27

② TAPERED CONCRETE CURBS ARE ALSO REQUIRED ON CONCRETE APPROACH SLABS.

③ PORTIONS OF GUARDRAIL & BLOCKOUTS ARE OMITTED FOR CLARITY.

④ LAP GUARDRAIL IN THE DIRECTON OF THE ADJACENT TRAFFIC LANE. (SEE DTL. DWG. NO. 606-05A).

⑤ LAP W-BEAM TERMINAL CONNECTOR (RWE02a-b) IN THE DIRECTION OF THE ADJACENT TRAFFIC LANE.

⑥ USE WOOD BLOCKS OR OTHER NCHRP 350 APPROVED BLOCKS FOR BLOCKOUTS.

⑦ DO NOT FLARE BRIDGE APPROACH SECTIONS.

⑧ SEE DTL. DWG. NO. 606-25A FOR SKEWED BRIDGES.

⑨ SEE DTL. DWG. NO. 606-05A FOR METAL GUARDRAIL (W-BEAM).

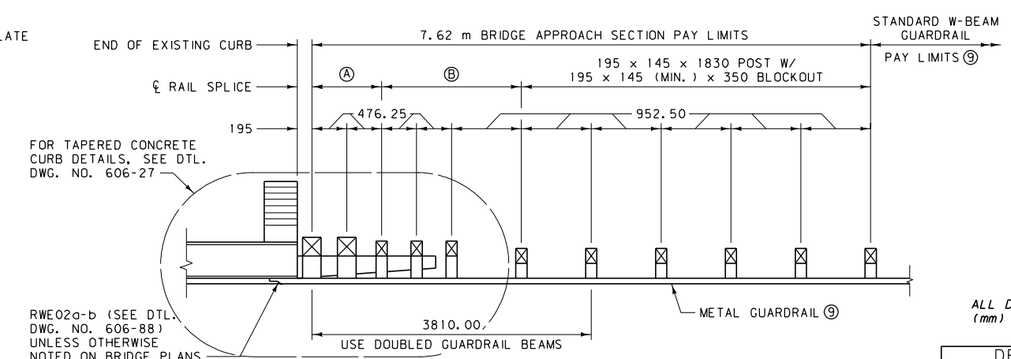

METAL GUARDRAIL-BRIDGE APPROACH SECTION TYPE 3

(FOR BRIDGES WITH EXISTING CONCRETE CURBS)

ALL DIMENSIONS ARE MILLIMETERS (mm) UNLESS OTHERWISE NOTED.

DETAILED DRAWING	
REFERENCE STANDARD SPEC. SECTION 606	DWG. NO. 606-24A
BRIDGE APPROACH SECTIONS - WOOD POSTS	
EFFECTIVE: FEBRUARY 2005	
serving you with pride	MONTANA DEPARTMENT OF TRANSPORTATION

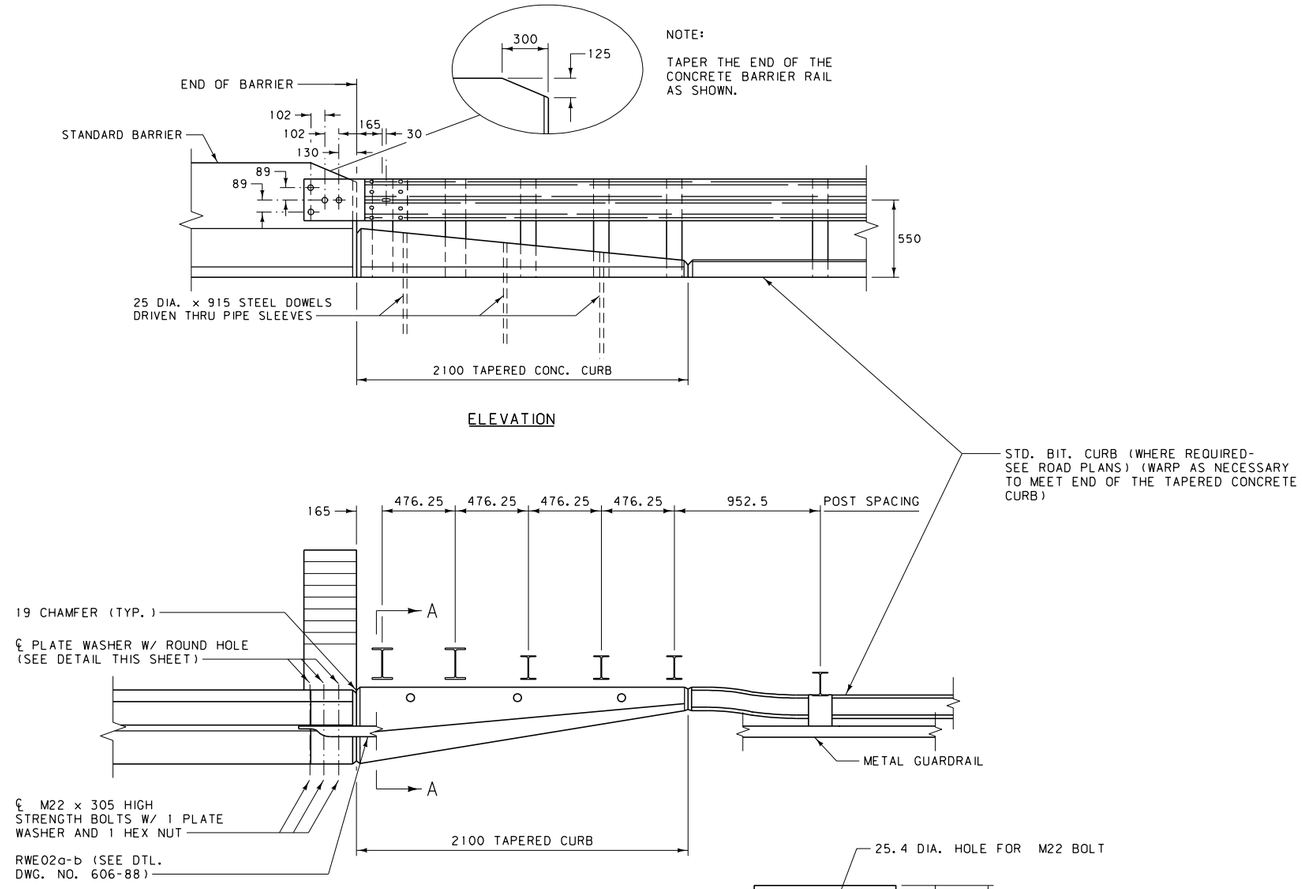

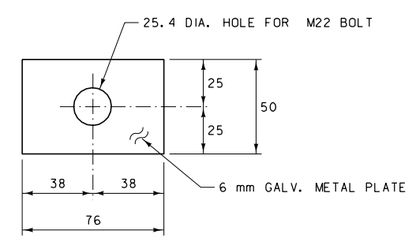

PLATE WASHER

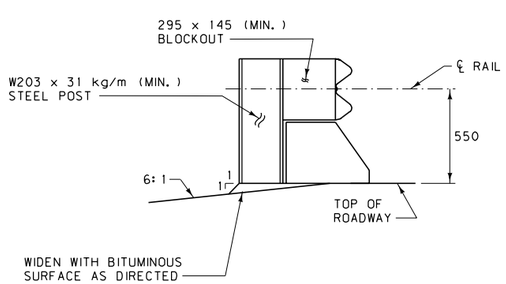

SECTION A-A

NOTES:

1. TAPERED CONCRETE CURBS:
   TYPE 1, SEE DTL. DWG. NO. 606-26
   TYPE 3, SEE DTL. DWG. NO. 606-27
2. TAPERED CONCRETE CURBS ARE ALSO REQUIRED ON CONCRETE APPROACH SLABS.
3. PORTIONS OF GUARDRAIL & BLOCKOUTS ARE OMITTED FOR CLARITY.
4. LAP GUARDRAIL IN THE DIRECTON OF THE ADJACENT TRAFFIC LANE. (SEE DTL. DWG. NO. 606-05B).
5. LAP W-BEAM TERMINAL CONNECTOR (RWE02a-b) IN THE DIRECTION OF THE ADJACENT TRAFFIC LANE.
6. USE ROUTED WOOD BLOCKS OR OTHER NCHRP 350 APPROVED BLOCKS FOR BLOCKOUTS.
7. DO NOT FLARE BRIDGE APPROACH SECTIONS.
8. SEE DTL. DWG. NO. 606-25B FOR SKEWED BRIDGES.
9. SEE DTL. DWG. NO. 606-05B FOR METAL GUARDRAIL (W-BEAM).

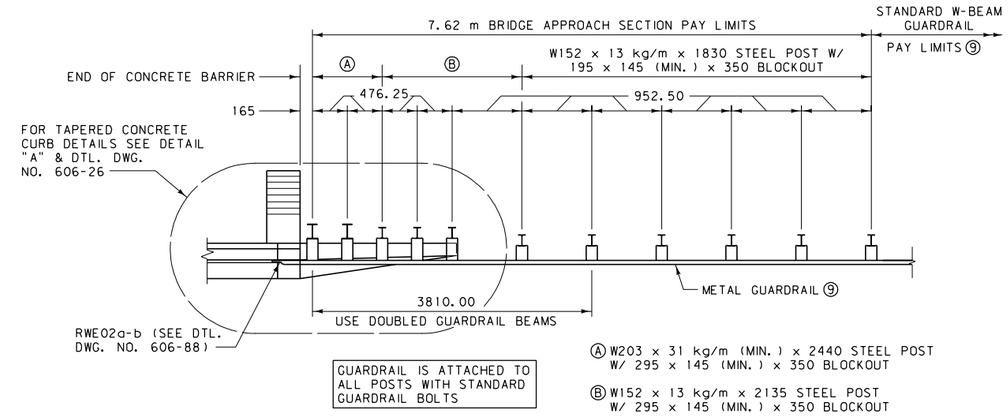

METAL GUARDRAIL-BRIDGE APPROACH SECTION TYPE 1

(FOR BRIDGES USING CONCRETE BARRIER RAIL)

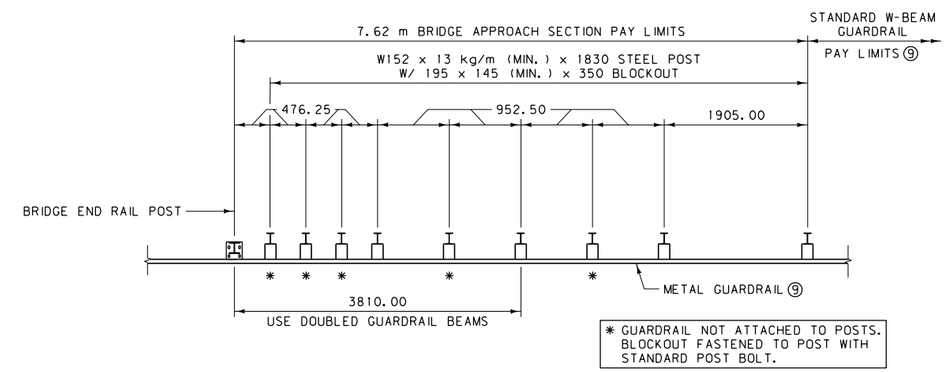

METAL GUARDRAIL-BRIDGE APPROACH SECTION TYPE 2

(FOR BRIDGES WITHOUT CURBS)

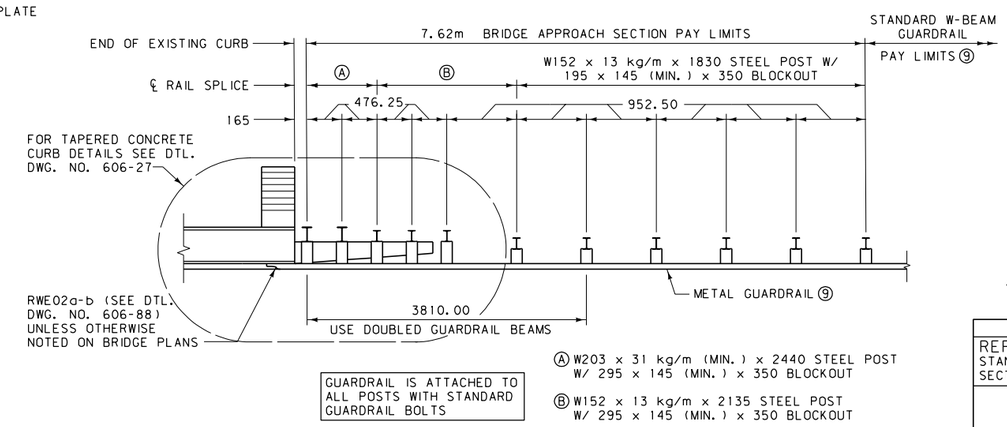

METAL GUARDRAIL-BRIDGE APPROACH SECTION TYPE 3

(FOR BRIDGES WITH EXISTING CONCRETE CURBS)

ALL DIMENSIONS ARE MILLIMETERS (mm) UNLESS OTHERWISE NOTED.

DETAILED DRAWING	
REFERENCE STANDARD SPEC. SECTION 606	DWG. NO. 606-24B
BRIDGE APPROACH SECTIONS - STEEL POSTS	
EFFECTIVE: FEBRUARY 2005	
serving you with pride	MONTANA DEPARTMENT OF TRANSPORTATION

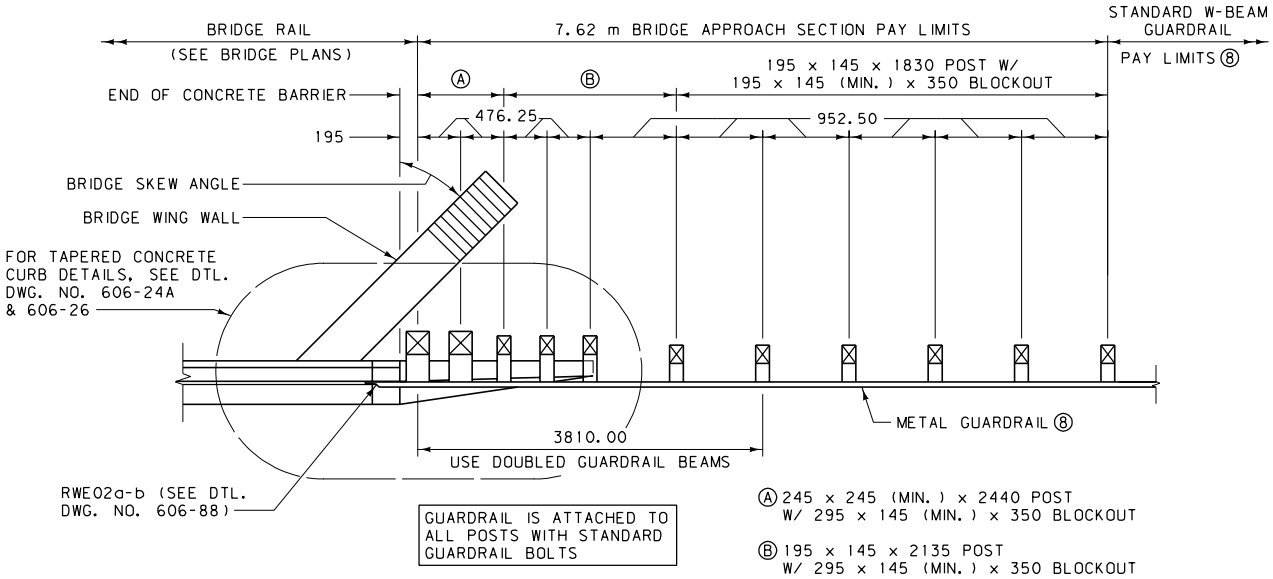

METAL GUARDRAIL-BRIDGE APPROACH SECTION TYPE 1

(FOR SKEWED BRIDGES USING CONCRETE BARRIER RAIL)

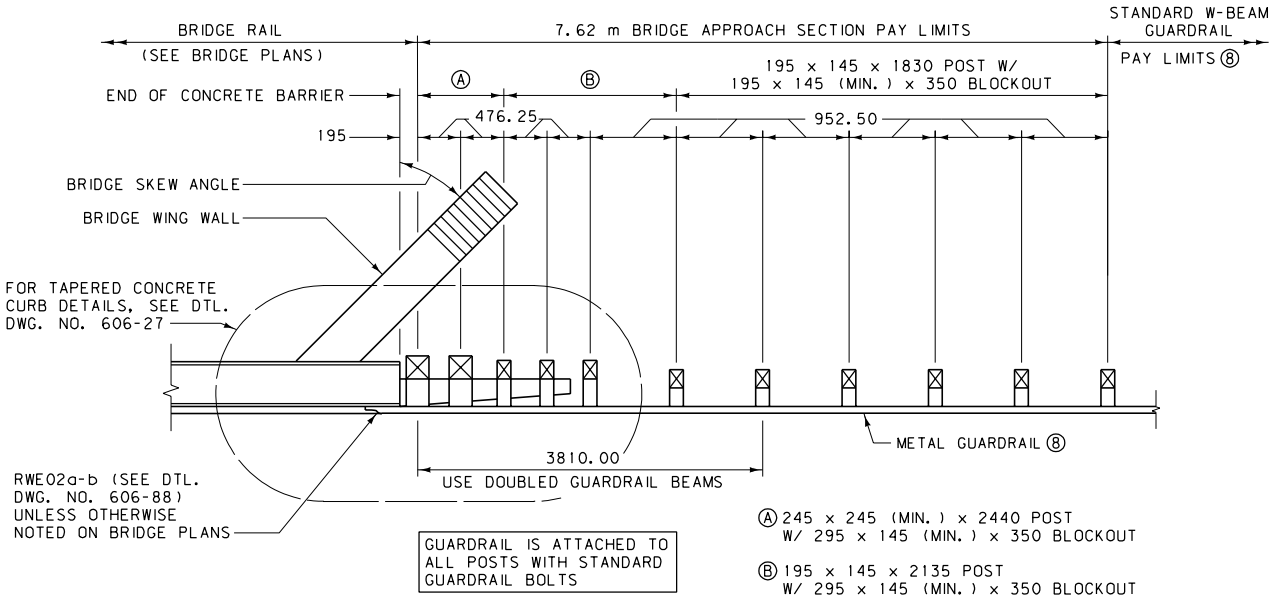

METAL GUARDRAIL-BRIDGE APPROACH SECTION TYPE 3

(FOR SKEWED BRIDGES WITH EXISTING CONCRETE CURBS)

NOTES:

① TAPERED CONCRETE CURBS:
TYPE 1, SEE DTL. DWG. NO. 606-26
TYPE 3, SEE DTL. DWG. NO. 606-27

② TAPERED CONCRETE CURBS ARE ALSO REQUIRED ON CONCRETE APPROACH SLABS.

③ LAP GUARDRAIL IN THE DIRECTON OF THE ADJACENT TRAFFIC LANE. (SEE DTL. DWG. NO. 606-05A).

④ LAP W-BEAM TERMINAL CONNECTOR (RWE02a-b) IN THE DIRECTION OF THE ADJACENT TRAFFIC LANE.

⑤ USE WOOD BLOCKS OR OTHER NCHRP 350 APPROVED BLOCKS FOR BLOCKOUTS.

⑥ DO NOT FLARE BRIDGE APPROACH SECTIONS.

⑦ SEE DTL. DWG. NO. 606-24A FOR ADDITIONAL INFORMATION.

⑧ SEE DTL. DWG. NO. 606-05A FOR METAL GUARDRAIL (W-BEAM).

ALL DIMENSIONS ARE MILLIMETERS (mm) UNLESS OTHERWISE NOTED.

DETAILED DRAWING	
REFERENCE STANDARD SPEC. SECTION 606	DWG. NO. 606-25A
SKEWED BRIDGE APPROACH SECTIONS - WOOD POSTS	
EFFECTIVE: FEBRUARY 2005	
serving you with pride	MONTANA DEPARTMENT OF TRANSPORTATION

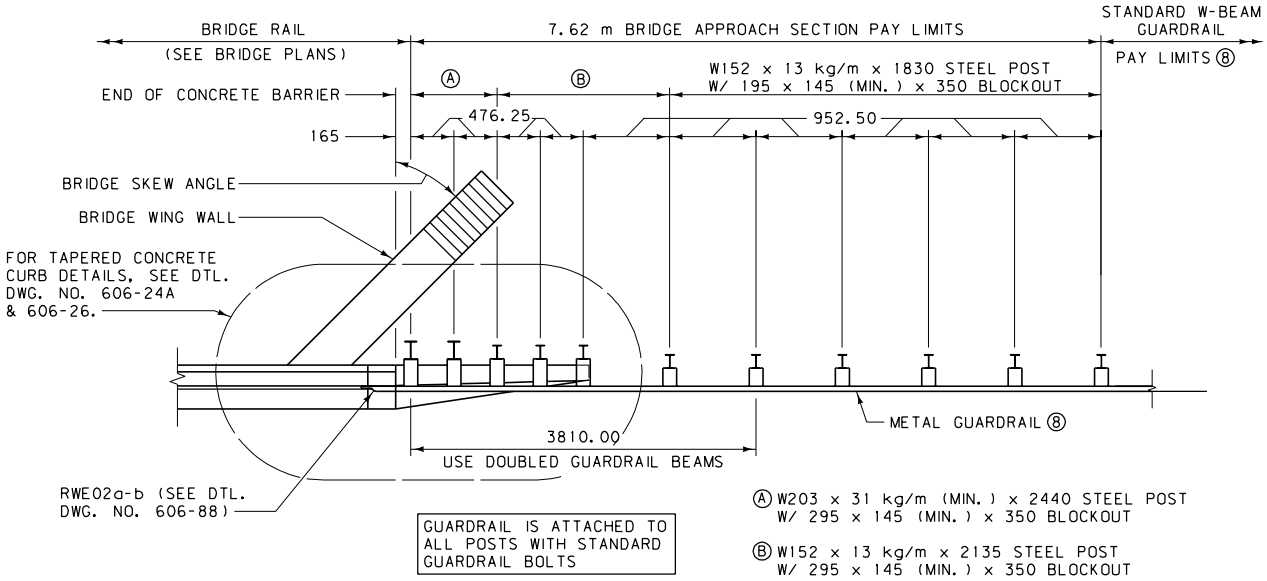

METAL GUARDRAIL-BRIDGE APPROACH SECTION TYPE 1

(FOR SKEWED BRIDGES USING CONCRETE BARRIER RAIL)

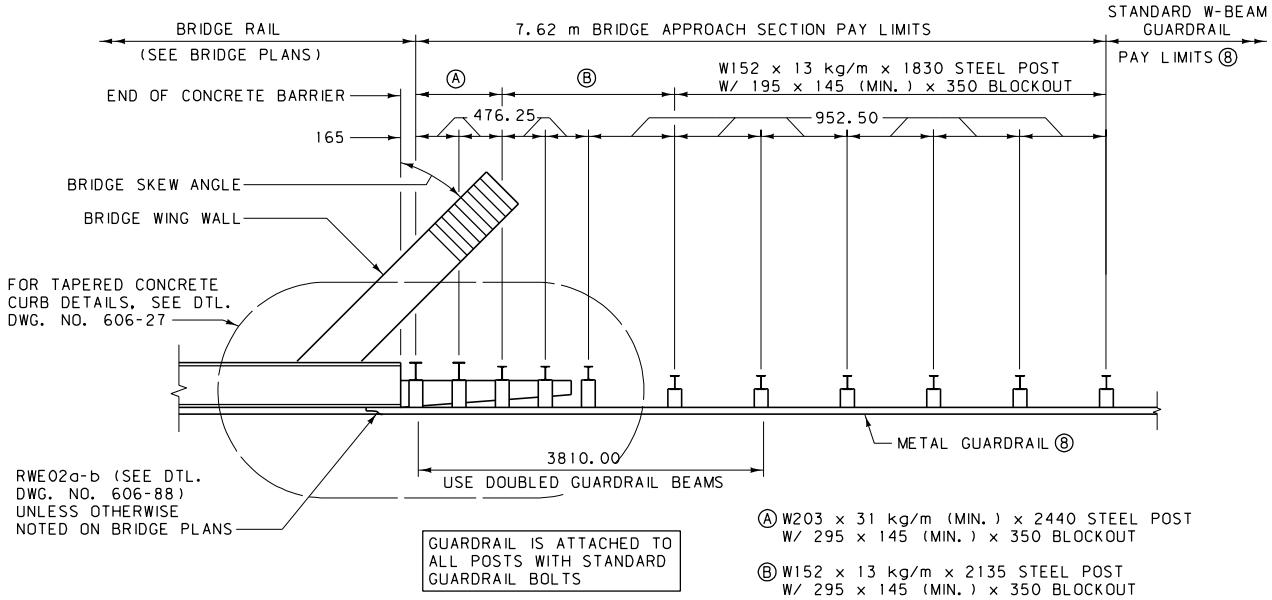

METAL GUARDRAIL-BRIDGE APPROACH SECTION TYPE 3

(FOR SKEWED BRIDGES WITH EXISTING CONCRETE CURBS)

NOTES:

① TAPERED CONCRETE CURBS:
TYPE 1, SEE DTL. DWG. NO. 606-26
TYPE 3, SEE DTL. DWG. NO. 606-27

② TAPERED CONCRETE CURBS ARE ALSO REQUIRED ON CONCRETE APPROACH SLABS.

③ LAP GUARDRAIL IN THE DIRECTON OF THE ADJACENT TRAFFIC LANE. (SEE DTL. DWG. NO. 606-05B).

④ LAP W-BEAM TERMINAL CONNECTOR (RWE02a-b) IN THE DIRECTION OF THE ADJACENT TRAFFIC LANE.

⑤ USE WOOD BLOCKS OR OTHER NCHRP 350 APPROVED BLOCKS FOR BLOCKOUTS.

⑥ DO NOT FLARE BRIDGE APPROACH SECTIONS.

⑦ SEE DTL. DWG. NO. 606-24B FOR ADDITIONAL INFORMATION.

⑧ SEE DTL. DWG. NO. 606-05B FOR METAL GUARDRAIL (W-BEAM).

ALL DIMENSIONS ARE MILLIMETERS (mm) UNLESS OTHERWISE NOTED.

DETAILED DRAWING	
REFERENCE STANDARD SPEC. SECTION 606	DWG. NO. 606-25B
SKEWED BRIDGE APPROACH SECTIONS - STEEL POSTS	
EFFECTIVE: FEBRUARY 2005	
serving you with pride	MONTANA DEPARTMENT OF TRANSPORTATION

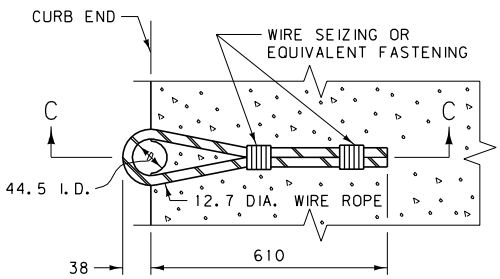

WIRE ROPE DETAIL

BILL OF REINFORCING STEEL (ONE SECTION ONLY)

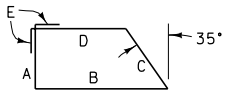

TYPE 1

BENT BARS (ALL DIMENSIONS ARE OUT TO OUT)

MARK	SIZE	NO.	TYPE	LENGTH	A	B	C	D	E
C1	#13	1	1	1360	270	395	330	205	80
C2				1225	240	350	290	185	
C3				1090	205	310	255	160	
C4				955	175	265	215	140	
C5				820	145	220	175	120	
C6				695	115	180	140	100	
C7				555	80	135	100	80	80
C8		1	1	415	50	90	60	55	40
B1	#13	4	STRAIGHT	2020	~	~	~	~	~

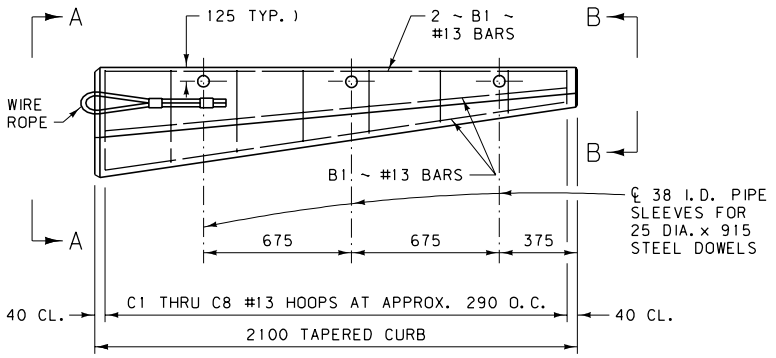

PLAN

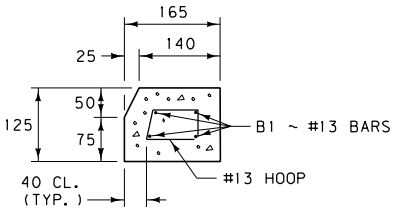

VIEW B-B

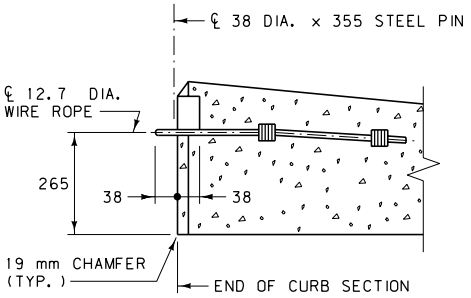

SECTION C-C

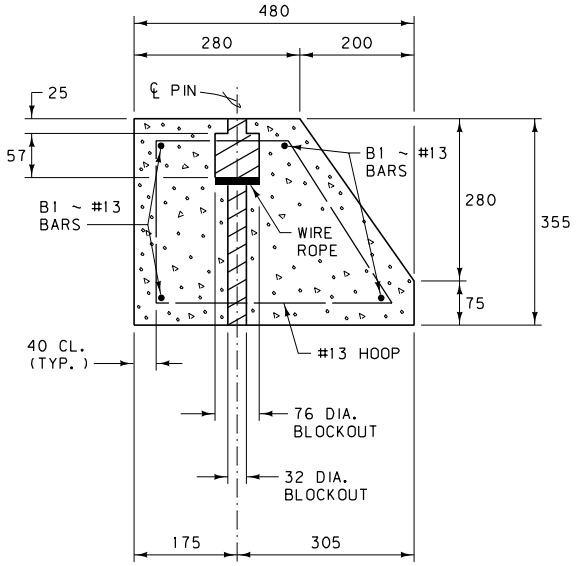

VIEW A-A

NOTES:

① TAPERED CONCRETE CURB IS USED WITH BRIDGE APPROACH SECTION TYPE 1 (SEE DTL. DWG. NO. 606-24A AND 606-24B).

② WIRE ROPE CONSISTS OF ZINC-COATED STEEL WIRE 7 STRAND UTILITY GRADE WITH A MINIMUM BREAKING STRENGTH OF 111.2 kN, COMFORMING TO ASTM SPECIFICATION A 475.

③ ALL REINFORCING STEEL IS OF THE DEFORMED TYPE, MEETING THE REQUIREMENTS OF AASHTO M 31M (ASTM A 615M, GRADE 420).

④ ALL CONCRETE IS CLASS "DD".
TOTAL CONCRETE PER 2100 mm TAPERED CURB EST. = 0.17 m³.
TOTAL REBAR WEIGHT PER 2100 mm TAPERED CURB EST. = 15.1 kg.

ALL DIMENSIONS ARE MILLIMETERS (mm) UNLESS OTHERWISE NOTED.

DETAILED DRAWING

REFERENCE
STANDARD SPEC.
SECTION 606

DWG. NO.
606-26

TAPERED CONCRETE
CURB DETAIL

EFFECTIVE: FEBRUARY 2005

MDT serving you with pride

MONTANA DEPARTMENT OF TRANSPORTATION

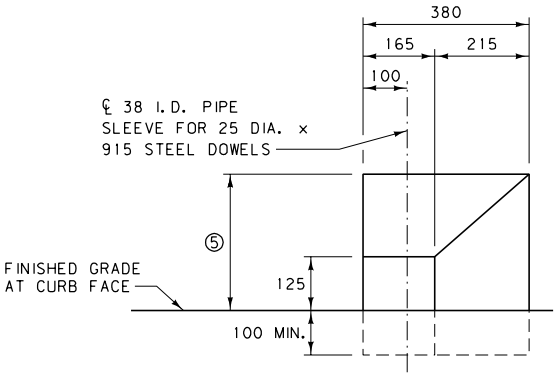

END VIEW

BILL OF REINFORCING STEEL (ONE SECTION ONLY)						
TYPE 1						
BENT BARS (ALL DIMENSIONS ARE OUT TO OUT)						
MARK	SIZE	NO.	TYPE	LENGTH	A	B
C1	#13	1	1	390	150	90
C2				480	175	130
C3				570	200	170
C4				665	225	215
C5				755	250	255
C6		1	1	845	270	295
B1		4	STRAIGHT	1720	~	~
B2	#13	2	STRAIGHT	600	~	~

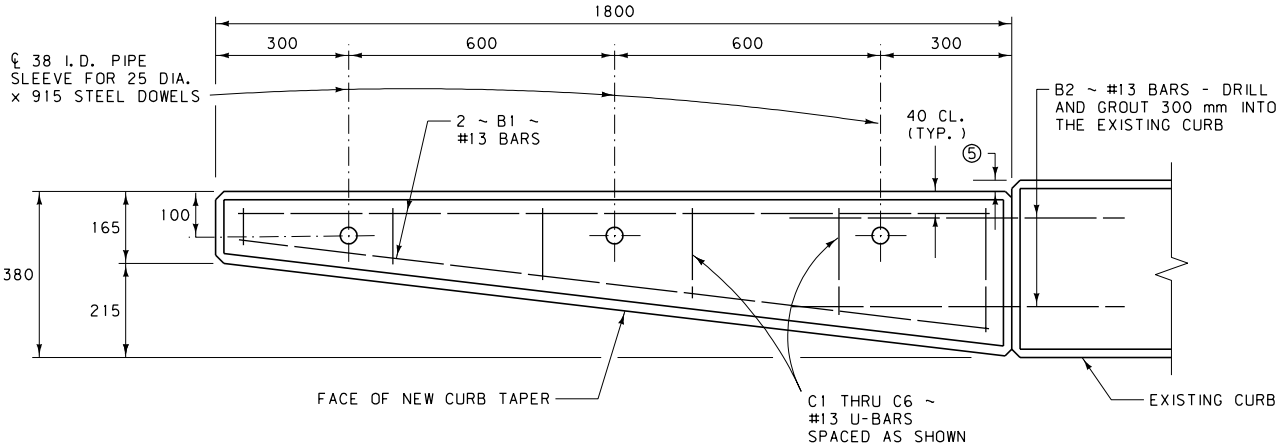

PLAN

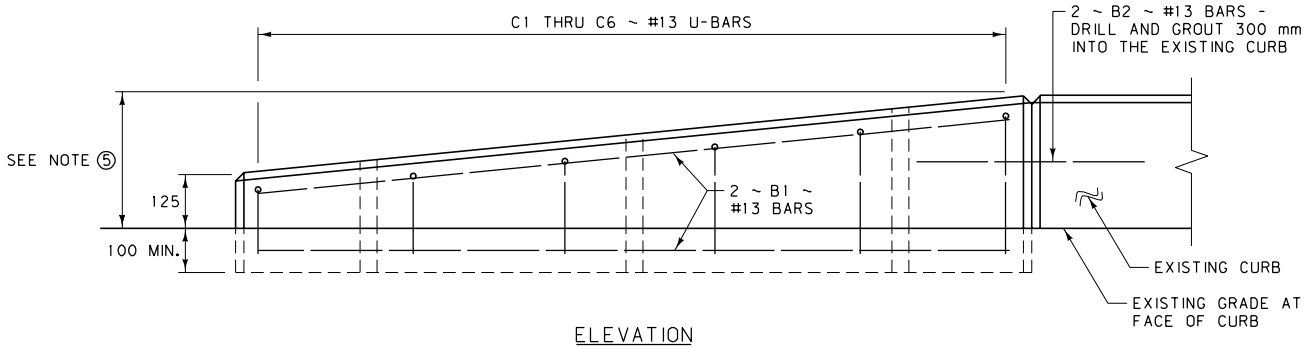

ELEVATION

NOTES:

① REMOVE THE EXISTING SURFACE UNDER THE NEW TAPERED CONCRETE CURB AS APPROVED BY THE ENGINEER. EMBED THE TAPERED CONCRETE CURB A MINIMUM OF 100 mm BELOW THE GRADE MEASURED AT THE INSIDE FACE OF THE TAPER.

② ALL REINFORCING STEEL IS OF THE DEFORMED TYPE, MEETING THE REQUIREMENTS OF AASHTO M 31M (ASTM A 615M, GRADE 420).

③ ALL CONCRETE IS CLASS "DD".
TOTAL CONCRETE PER 1800 mm TAPERED CURB EST. = 0.16 m³.
TOTAL REBAR WEIGHT PER 1800 mm TAPERED CURB EST. = 11.7 kg.

④ TAPERED CONCRETE CURB IS USED WITH BRIDGE APPROACH SECTION TYPE 3 (SEE DTL. DWG. NO. 606-24A AND 606-24B).

⑤ ADJUST DIMENSION TO MATCH EXISTING CURB.

ALL DIMENSIONS ARE MILLIMETERS (mm) UNLESS OTHERWISE NOTED.

DETAILED DRAWING

REFERENCE STANDARD SPEC. SECTION 606

DWG. NO. 606-27

TAPERED CONCRETE CURB DETAIL

EFFECTIVE: FEBRUARY 2005

MDT serving you with pride — MONTANA DEPARTMENT OF TRANSPORTATION

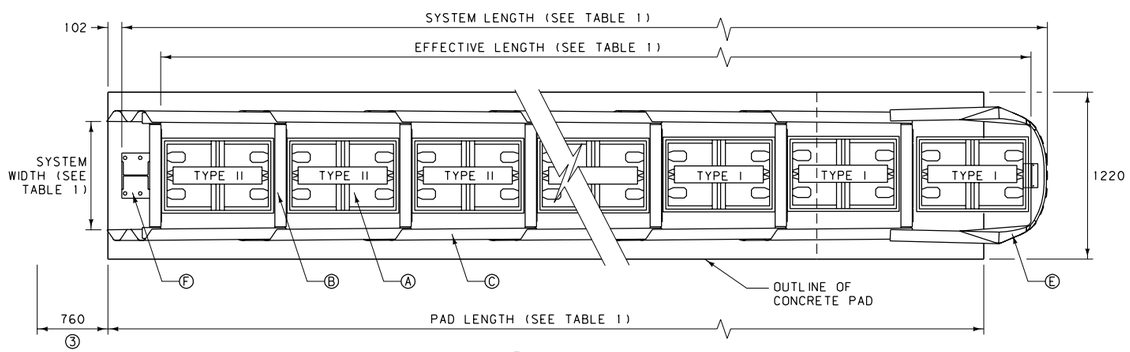

PLAN

Ⓐ QUADGUARD CARTRIDGE
Ⓑ DIAPHRAGM
Ⓒ FENDER PANEL
Ⓓ MONORAIL
Ⓔ NOSE ASSEMBLY
Ⓕ BACK UP
NOT INCLUDED IN MODEL NUMBER, ORDER SEPARATELY

UNIDIRECTIONAL TRAFFIC ①

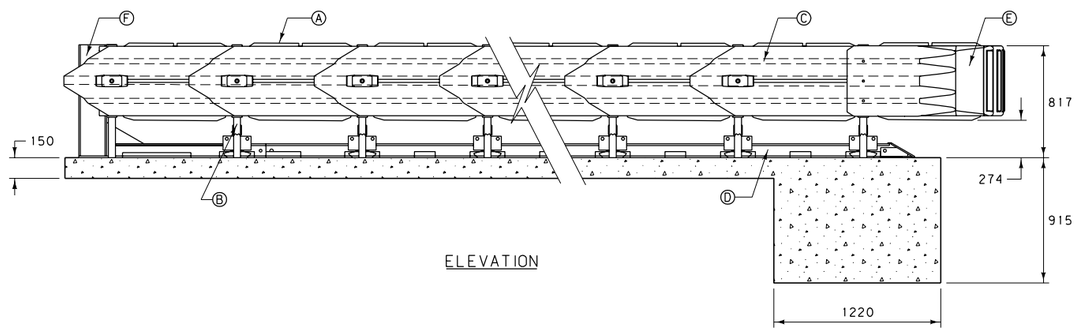

ELEVATION

TABLE 1:

BAYS	610 WIDTH MODEL NO.	760 WIDTH MODEL NO.	915 WIDTH MODEL NO.	SYSTEM L (m)	EFFECTIVE L (m)	PAD L (m)	MAX DESIGN SPEED (km/hr)	NO. OF CARTRIDGES	
								TYPE I	TYPE II
1	QS2401*	QS3001*	QS3601*	2.16	1.73	2.74	40	2	0
2	QS2402*	QS3002*	QS3602*	3.08	2.64	2.74	60	2	1
3	QS2403*	QS3003*	QS3603*	4.00	3.56	3.66	70	3	1
4	QS2404*	QS3004*	QS3604*	4.91	4.47	4.57	80	3	2
5	QS2405*	QS3005*	QS3605*	5.83	5.38	5.49	90	4	2
6	QS2406*	QS3006*	QS3606*	6.74	6.30	6.40	100	4	3
7	QS2407*	QS3007*	QS3607*	7.65	7.21	7.32	105	4	4
8	QS2408*	QS3008*	QS3608*	8.57	8.13	8.23	110	4	5
9	QS2409*	QS3009*	QS3609*	9.49	9.04	9.14	115	4	6
10	QS2410*	QS3010*	QS3610*	10.40	9.96	10.06	120	5	6
11	QS2411*	QS3011*	QS3611*	11.32	10.87	10.97	120	5	7
12	QS2412*	QS3012*	QS3612*	12.23	11.79	11.89	120	5	8

* G = GREY OR Y = YELLOW

NOTES:

① ATTACHMENT SHOWN IS TO SHAPES WITH RECTANGULAR CROSS SECTIONS SUCH AS: PIERS, PARAPETS AND MODIFIED CONCRETE BARRIER RAIL. TRAFFIC FLOW IS UNIDIRECTIONAL. ATTACHMENTS AND TRANSITIONS TO OTHER SHAPES, BARRIERS, RAILINGS AND BIDIRECTIONAL TRAFFIC FLOWS ARE AVAILABLE FROM THE MANUFACTURER.

② THE SYSTEM SHOWN INCLUDES THE TENSION STRUT BACKUP ASSEMBLY AND THE CONCRETE PAD AS DETAILED. SEE THE MANUFACTURER FOR DRAWINGS DETAILING THE REINFORCING STEEL FOR THE CONCRETE PAD AND FOR OTHER BACKUP & CONCRETE PAD OPTIONS.

③ PROVIDE ADEQUATE CLEARANCE FOR THE DISTANCE SHOWN TO ALLOW FENDER PANELS TO SLIDE REARWARD UPON IMPACT.

④ SEE MANUFACTURER FOR MORE INFORMATION ON SPECIFIC DESIGNS, INSTALLATION AND MAINTENANCE OF THE QUADGUARD SYSTEM.

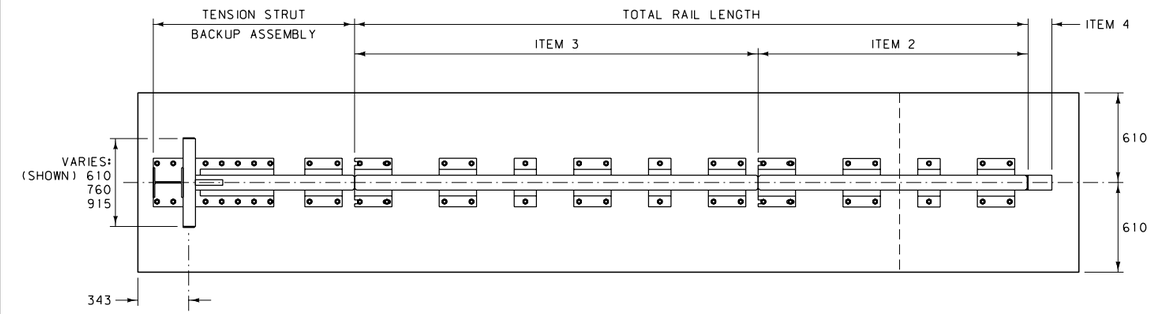

PLAN

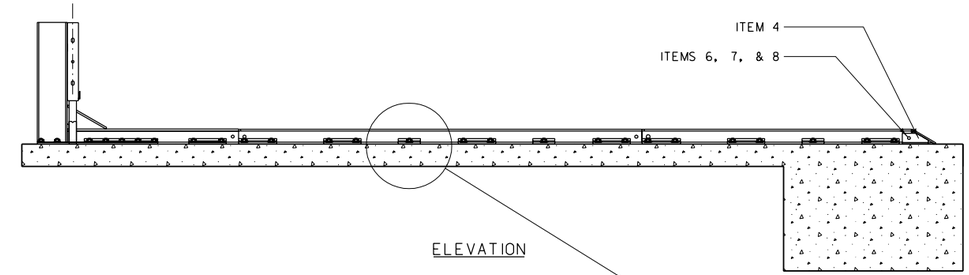

ELEVATION

MONORAIL ASSEMBLY
(TYPICAL 6 BAY ASSEMBLY)

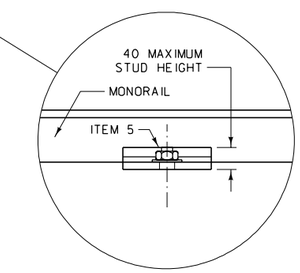

TABLE 2:

ITEM	STOCK NO.	DESCRIPTION	REQ'D
1	2760051-0000	MONORAIL, ONE BAY	#
2	2760061-0000	MONORAIL, TWO BAYS	#
3	2760071-0000	MONORAIL, THREE BAYS	#
4	2760041-0000	MONORAIL END CAP	1
5	3525300-0000	ANCHOR KIT	#
6	2699571-0000	M16 x 89 HEX BOLT	1
7	2704141-0000	M16 HEX NUT	1
8	2708231-0000	M16 LOCK WASHER	1

TABLE 3:

ASSEMBLY NO.	TOTAL RAIL LENGTH	# ITEM 1	# ITEM 2	# ITEM 3	# ITEM 5	NO. OF BAYS
3540060-0100	0	0	0	0	0	1
3540060-0200	915	1	0	0	2	2
3540060-0300	1830	0	1	0	3	3
3540060-0400	2745	0	0	1	4	4
3540060-0500	3660	1	0	1	5	5
3540060-0600	4575	0	1	1	6	6
3540060-0700	5490	0	0	2	7	7
3540060-0800	6405	1	0	2	8	8
3540060-0900	7320	0	1	2	9	9
3540060-1000	8235	0	0	3	10	10
3540060-1100	9150	1	0	3	12	11
3540060-1200	10 065	0	1	3	13	12

ALL DIMENSIONS ARE MILLIMETERS (mm) UNLESS OTHERWISE NOTED.

DETAILED DRAWING

REFERENCE STANDARD SPEC. SECTION 606

DWG. NO. 606-30A

IMPACT ATTENUATOR - QUADGUARD

EFFECTIVE: FEBRUARY 2005

MDT serving you with pride — MONTANA DEPARTMENT OF TRANSPORTATION

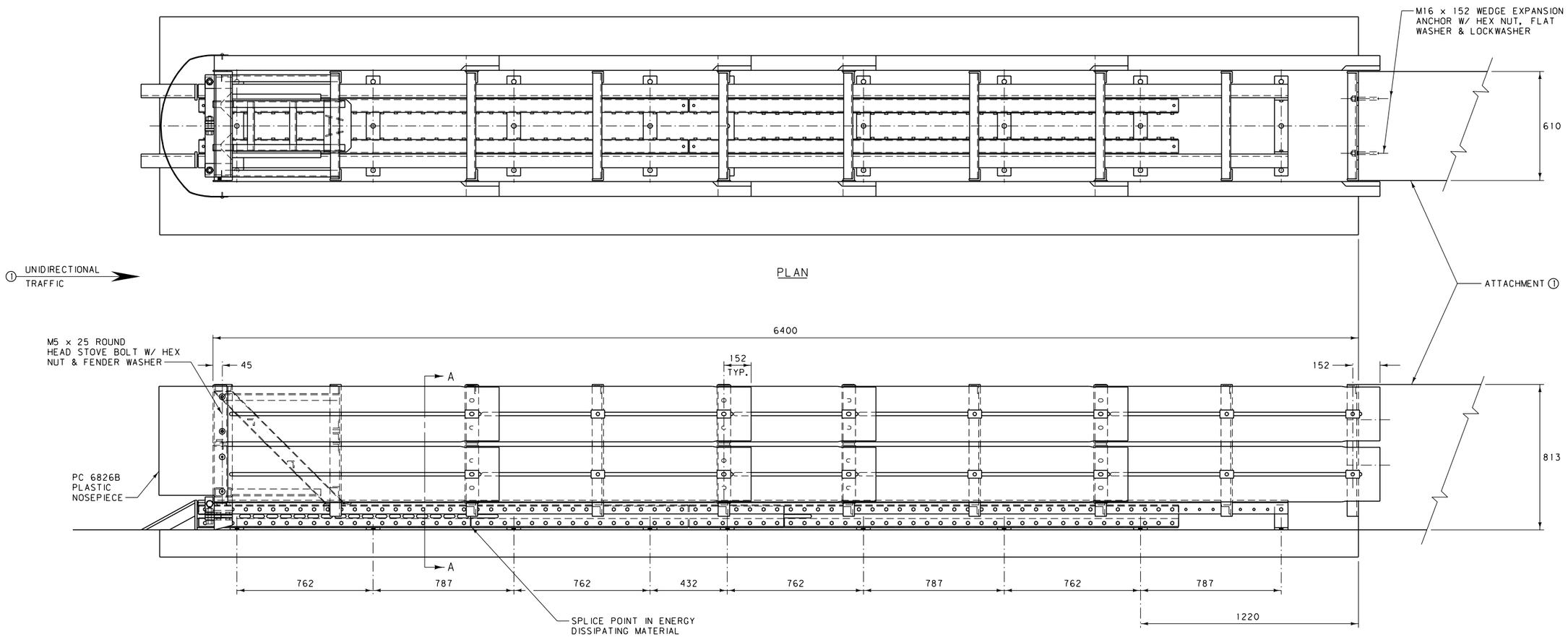

ELEVATION

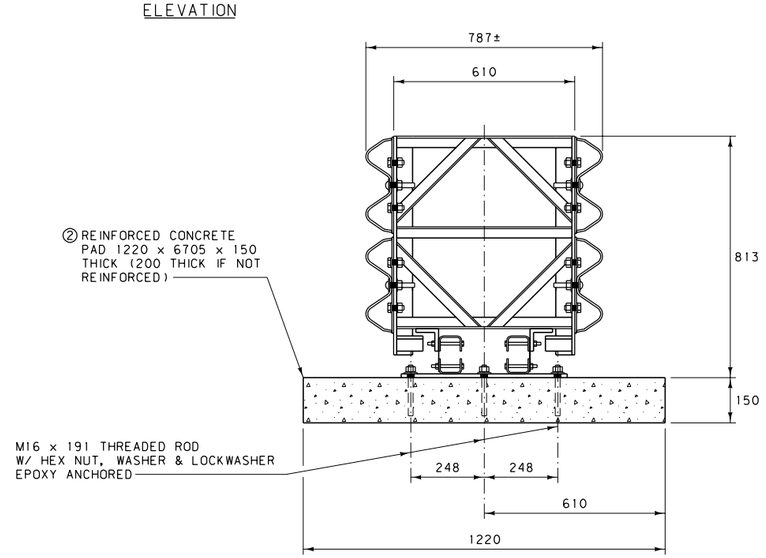

SECTION A-A

BILL OF MATERIAL			
	PC	QTY	DESCRIPTION
*	970A	1	TRACC UNIT ASSEMBLY
	3310G	4	M16 LOCKWASHER
	4451G	4	M16 x 152 WEDGE EXP. ANCHOR
	6707G	8	M5 x 25 RND. HEAD STOVE BOLT
	6708G	8	M5 HEX NUT
	6709G	8	M5 FENDER WASHER (19 O.D.)
	6825B	4	REFLECTIVE TAPE
	6826B	1	PLASTIC NOSEPIECE
	ANCHOR HARDWARE (CONCRETE BASE)		
	6352G	27	M16 x 191 THREADED ROD
	3310G	27	M16 LOCKWASHER
	3361G	27	M16 HEX NUT
	3300G	27	M16 FLAT WASHER
	4747G	2	KELKEN EPOXY (QUART CAN)
	ANCHOR HARDWARE (ASPHALT BASE)		
	6380G	27	M16 x 457 THREADED ROD
	3310G	27	M16 LOCKWASHER
	3361G	27	M16 HEX NUT
	3300G	27	M16 FLAT WASHER
	4747G	6	KELKEN EPOXY (QUART CAN)

* SEE DET. DWG. NO. 606-31B

NOTES:

① ATTACHMENT SHOWN IS TO SHAPES WITH RECTANGULAR CROSS SECTIONS SUCH AS: PIERS, PARAPETS, AND MODIFIED CONCRETE BARRIER RAIL. TRAFFIC FLOW IS UNIDIRECTIONAL. ATTACHMENTS AND TRANSITIONS TO OTHER SHAPES, BARRIERS, RAILINGS AND BIDIRECTIONAL TRAFFIC FLOWS ARE AVAILABLE FROM THE MANUFACTURER.

② REINFORCEMENT DRAWINGS FOR THE CONCRETE PAD SHOWN, AS WELL AS OTHER PAD SIZES ARE AVAILABLE FROM THE MANUFACTURER.

③ SEE MANUFACTURER FOR MORE INFORMATION ON SPECIFIC DESIGNS, INSTALLATION AND MAINTENANCE OF THE TRACC SYSTEM.

ALL DIMENSIONS ARE MILLIMETERS (mm) UNLESS OTHERWISE NOTED.

DETAILED DRAWING

REFERENCE STANDARD SPEC. SECTION 606

DWG. NO. 606-30B

IMPACT ATTENUATOR - TRACC

EFFECTIVE: FEBRUARY 2005

MDT serving you with pride — MONTANA DEPARTMENT OF TRANSPORTATION

ITEM	STOCK NO.	DESCRIPTION	REQ'D
1	SEE TABLE A	DIAPHRAGM	1
8	2760091-0000	MONORAIL GUIDE	2
9	2704341-0000	M20 HEX NUT	4
10	2699121-0000	M20 x 51 HEX BOLT	4
11	2708201-0000	M20 LOCK WASHER	4
12	2760292-0000	CARTRIDGE SUPPORT BRACKET	2

TABLE A:

ASSEMBLY NO.	STOCK NO.	DESCRIPTION
3540071-0000	2761011-0000	610 WIDE DIAPHRAGM
3540072-0000	2761021-0000	760 WIDE DIAPHRAGM
3540073-0000	2761031-0000	915 WIDE DIAPHRAGM

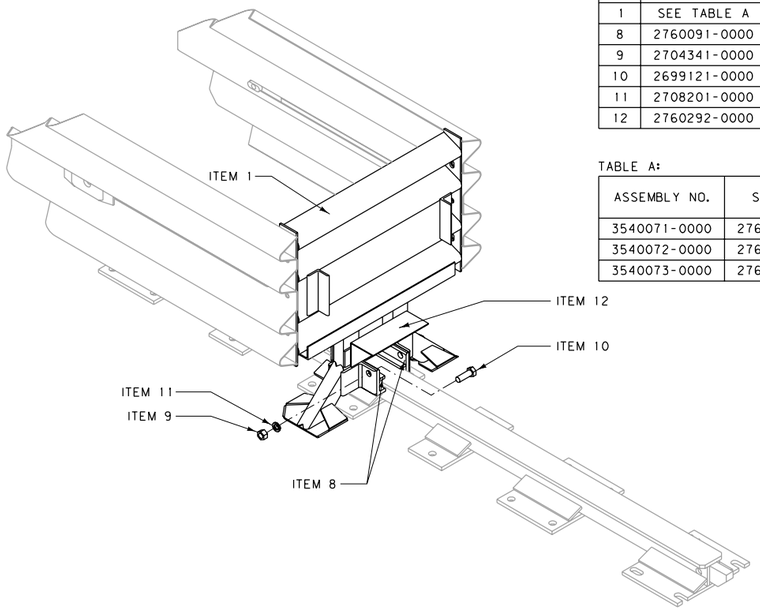

DIAPHRAGM ASSEMBLY

ITEM	STOCK NO.	DESCRIPTION	REQ'D
1	3540130-0*00	NOSE, W/ SUPPORT BRACKET	1
2	2699341-0000	M16 x 51 RAIL BOLT	6
3	2704191-0000	M16 HEX NUT	6
4	2708871-0000	WASHER (BAR 3.2 x 32 x 51, W/ M16 HOLE)	6
5	2760251-0000	PULL-OUT BRACKET	2

* 0 INDICATES GRAY
* 1 INDICATES YELLOW

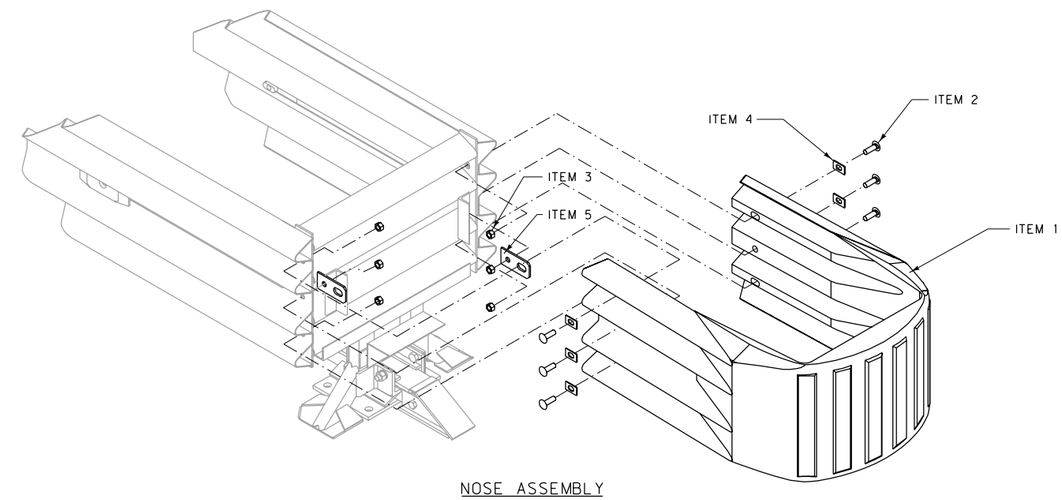

NOSE ASSEMBLY

ASSEMBLY NO. 3540050-0100 (YELLOW)
ASSEMBLY NO. 3540050-0000 (GRAY)

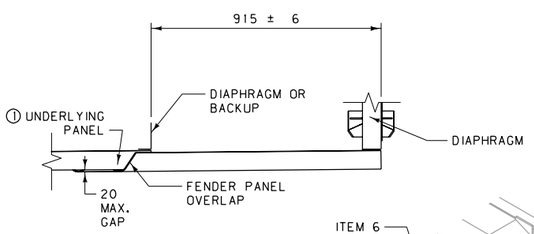

ITEM	STOCK NO.	DESCRIPTION	REQ'D
1	2760081-0000	FENDER PANEL	1
2	2699341-0000	M16 x 51 RAIL BOLT	2
3	2704191-0000	M16 HEX NUT	2
4	2708841-0000	CAST MUSHROOM WASHER	1
5	2706604-0000	M16 x 127 SCREW	1
6	2704141-0000	M16 HEX NUT	1
7	2708291-0000	M16 WASHER	4
8	2021611-0000	ELASTOMERIC BUSHING	1

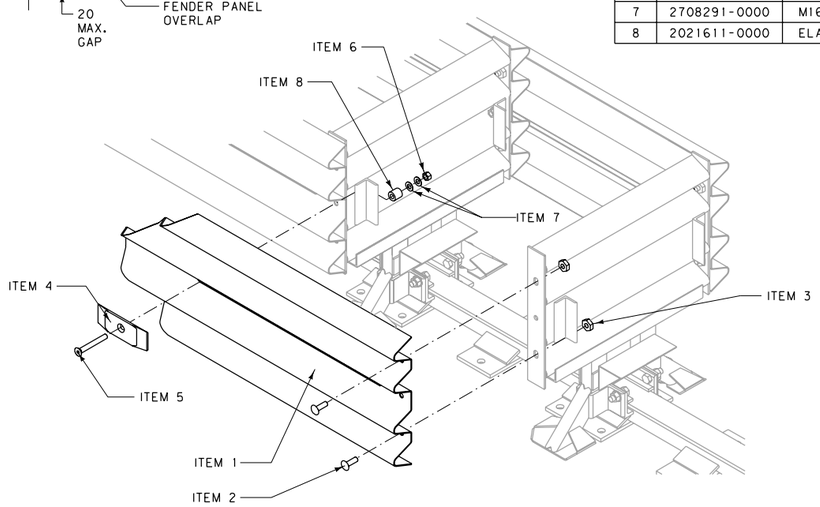

NOTE:

① UNDERLYING PANEL IS EITHER ANOTHER FENDER PANEL OR, IN THE CASE OF THE LAST FENDER PANEL IT COULD BE A BACKUP SIDE PANEL, EXTENSION PANEL OR TRANSITION PANEL.

② TWO FENDER PANEL ASSEMBLIES ARE REQUIRED PER BAY.

FENDER PANEL ASSEMBLY

ASSEMBLY NO. 3540040-0000

ITEM	STOCK NO.	DESCRIPTION	REQ'D
1	SEE TABLE A	TENSION BACKUP	1
2	2760141-0000	SIDE PANEL	2
9	3525300-0000	ANCHOR KIT	3
10	2704191-0000	M16 HEX NUT	4
11	2699341-0000	M16 x 51 RAIL BOLT	4
12	2760293-0000	CARTRIDGE SUPPORT BRACKET	1
13	2760294-0000	CARTRIDGE SUPPORT LOCKING BAR	1

TABLE A:

ASSEMBLY NO.	STOCK NO.	DESCRIPTION
3540031-0000	2760011-0000	610 WIDE TENSION BACKUP
3540032-0000	2760021-0000	760 WIDE TENSION BACKUP
3540033-0000	2760031-0000	915 WIDE TENSION BACKUP

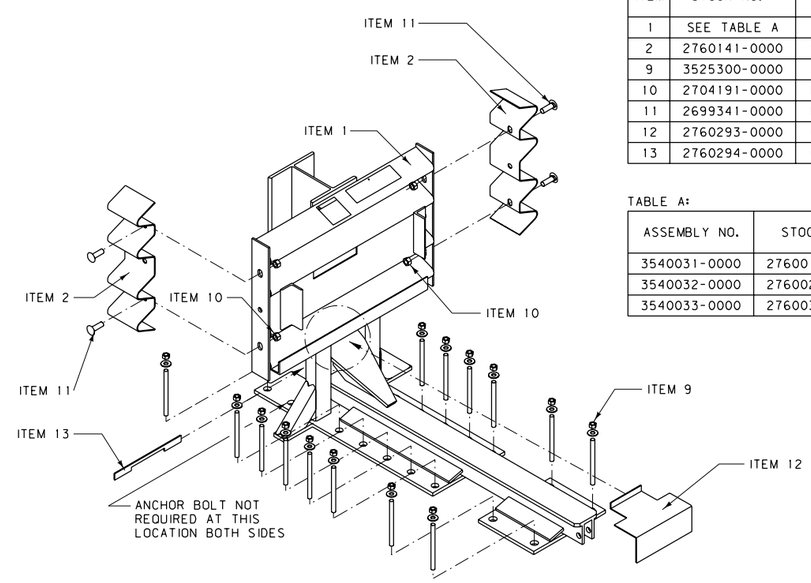

BACKUP ASSEMBLY

NOTE:

③ WHEN TRANSITIONING THE QUADGUARD SYSTEM TO EXISTING BARRIERS, SEE MANUFACTURER FOR PROPER USE OF SIDE PANEL (ITEM 2).

ALL DIMENSIONS ARE MILLIMETERS (mm) UNLESS OTHERWISE NOTED.

DETAILED DRAWING

REFERENCE
STANDARD SPEC.
SECTION 606

DWG. NO. 606-31A

IMPACT ATTENUATOR - QUADGUARD ASSEMBLY DETAILS

EFFECTIVE: FEBRUARY 2005

MDT serving you with pride — MONTANA DEPARTMENT OF TRANSPORTATION

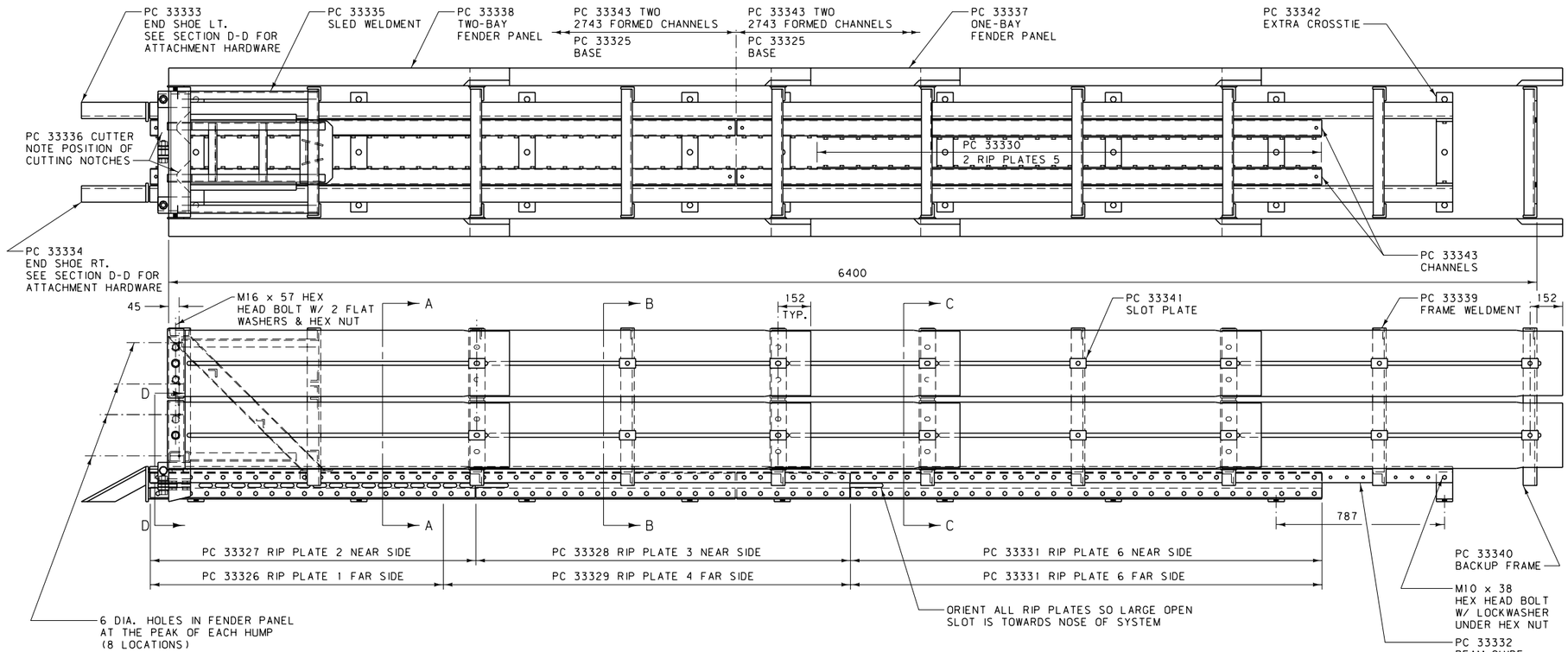

BILL OF MATERIAL		
PC	QTY	DESCRIPTION
33325A	2	BASE ASSEMBLY
33326G	1	1370 RIP PLATE 1
33327G	1	1525 RIP PLATE 2
33328G	1	1750 RIP PLATE 3
33329G	1	1905 RIP PLATE 4
33330G	2	2360 RIP PLATE 5
33331G	2	2210 RIP PLATE 6
33332G	2	6100 BEAM GUIDE
33333A	1	END SHOE (LEFT)
33334A	1	END SHOE (RIGHT)
33335A	1	SLED WELDMENT
33336A	1	CUTTER
33337A	4	ONE-BAY FENDER PANEL
33338A	16	TWO-BAY FENDER PANEL
33339A	7	FRAME WELDMENT
33340A	1	BACKUP FRAME WELDMENT
33341A	32	SLOT PLATE
33342A	1	EXTRA CROSSTIE
33343A	4	2745 FORMED CHANNEL
3340G	32	M16 HGR NUT
3361G	42	M16 HEX NUT
3391G	32	M16 x 44 HEX HEAD BOLT
3400G	16	M16 x 51 HGR BOLT
3435G	16	M16 x 89 HGR BOLT
3704G	9	M20 HEX NUT
3718G	9	M20 x 76 HEX HEAD BOLT
4258G	294	M10 LOCKWASHER
4261G	6	M10 x 38 HEX HEAD BOLT
4372G	84	M16 FLAT WASHER
5306G	10	M16 x 57 HEX HEAD BOLT
6322G	140	M10 x 102 HEX HEAD BOLT
6323G	148	M10 x 114 HEX HEAD BOLT
6405G	294	M10 HEAVY HEX NUT

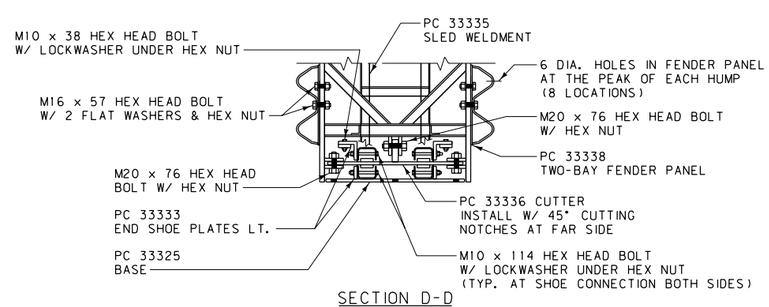

SECTION D-D

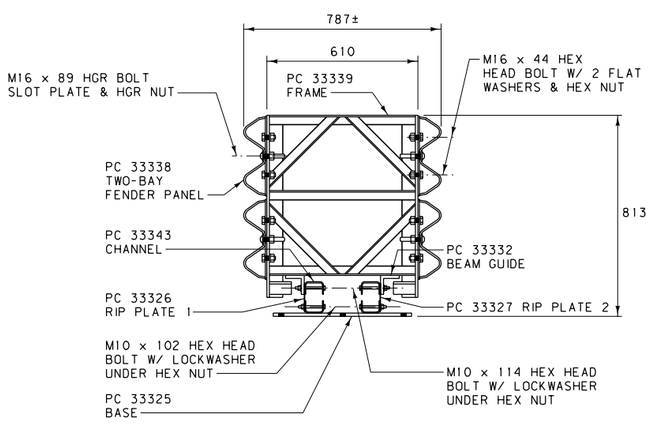

SECTION A-A

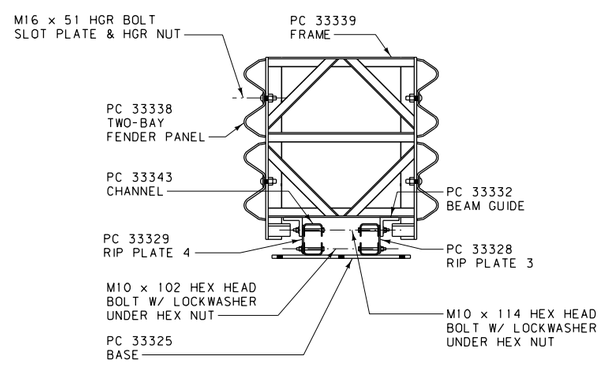

SECTION B-B

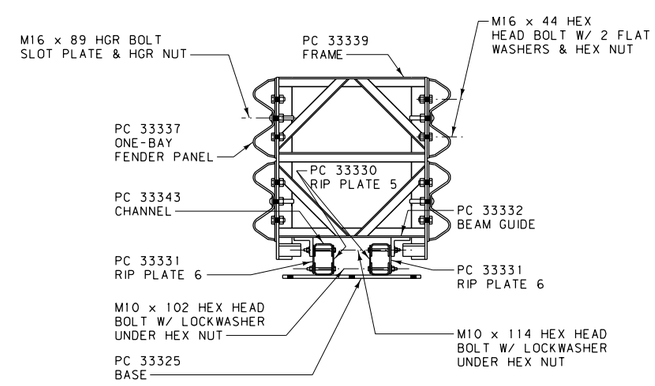

SECTION C-C

ALL DIMENSIONS ARE MILLIMETERS (mm) UNLESS OTHERWISE NOTED.

DETAILED DRAWING

REFERENCE STANDARD SPEC. SECTION 606 — DWG. NO. 606-31B

IMPACT ATTENUATOR - TRACC ASSEMBLY DETAILS

EFFECTIVE: FEBRUARY 2005

MDT serving you with pride — MONTANA DEPARTMENT OF TRANSPORTATION

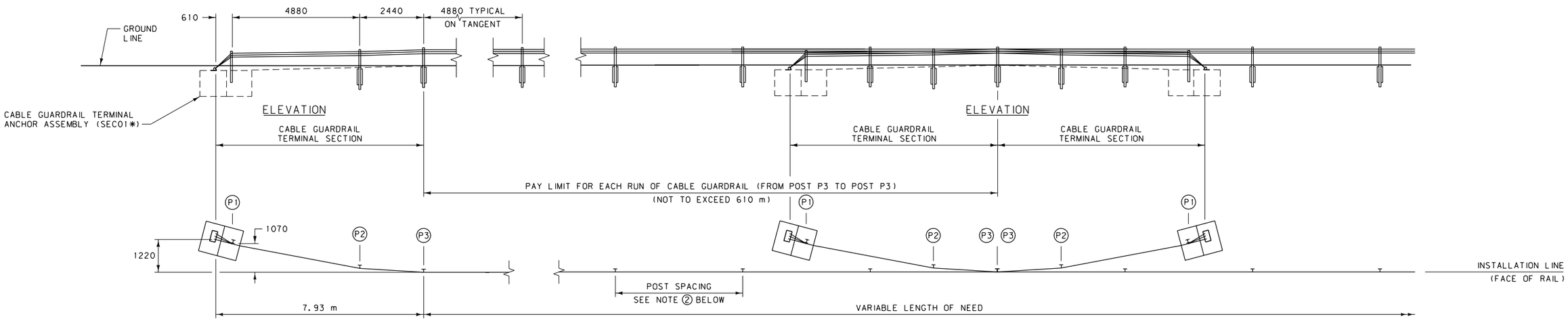

PLAN

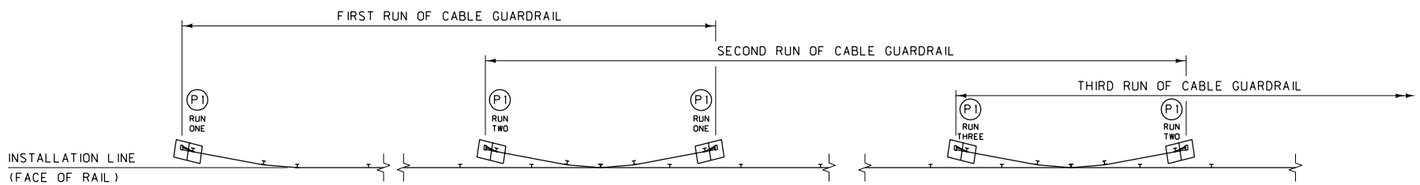

TYPICAL LAYOUT FOR MULTIPLE RUNS OF CABLE GUARDRAIL

EACH RUN OF CABLE GUARDRAIL CONTAINS TWO TERMINAL SECTIONS WITH ANCHOR ASSEMBLIES.

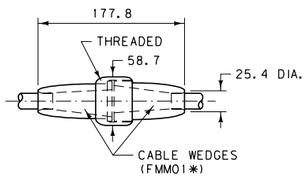

CABLE SPLICE

SPLICE CABLE USING A COUPLING DEVICE AS SHOWN, OR AN ALTERNATE METHOD APPROVED BY THE ENGINEEER.

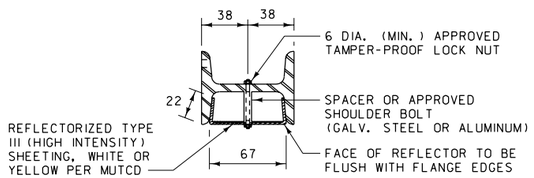

REFLECTOR ALT. "B"

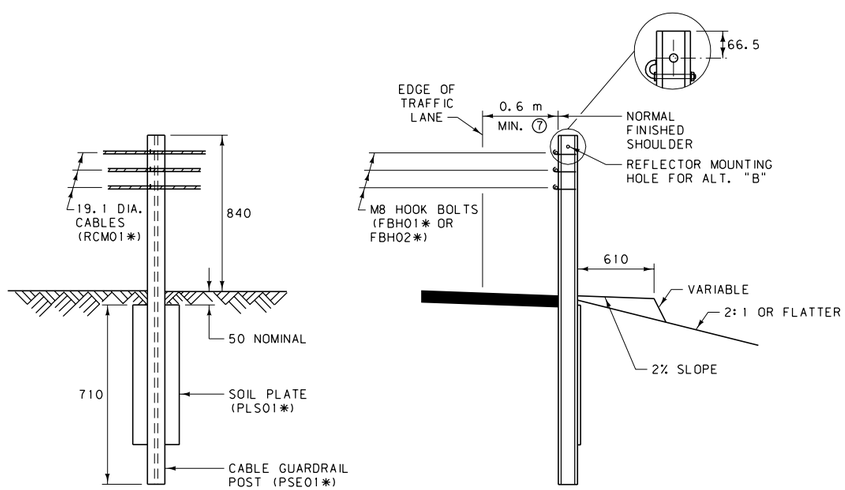

TYPICAL INSTALLATION DETAIL

LINE POST & POST P3

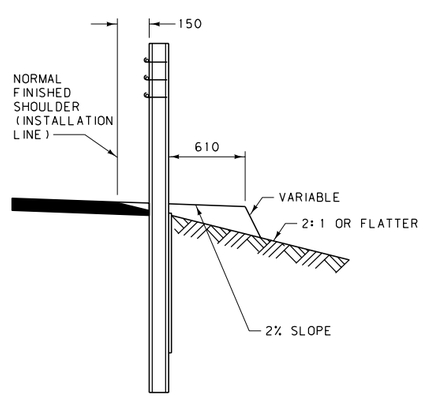

TYPICAL INSTALLATION DETAIL

POST P2

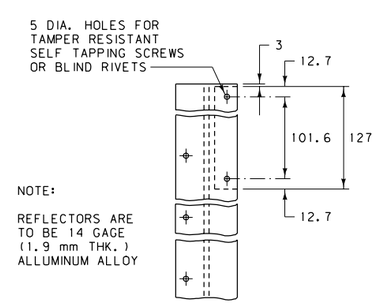

NOTE:

REFLECTORS ARE TO BE 14 GAGE (1.9 mm THK.) ALLUMINUM ALLOY

REFLECTOR ALT. "A"

NOTES:

① FOR CABLE GUARDRAIL RUNS OF:

318.42 m OR LESS: USE COMPENSATING CABLE END ASSEMBLY (RCE01✱) ON ONE END AND TURNBUCKLE CABLE END ASSEMBLY ✱ ON THE OTHER END OF EACH CABLE.

GREATER THAN 318.42 m, UP TO 625.86 m MAXIMUM: USE COMPENSATING CABLE END ASSEMBLY (RCE01✱) ON BOTH ENDS OF EACH CABLE.

② LINE POST SPACING:

TANGENTS AND CURVES WITH RADII 220 m AND GREATER: 4880 mm.

CURVES WITH RADII LESS THAN 220 m DOWN TO 135 m: 3660 mm.

NOTE: DO NOT INSTALL CABLE GUARDRAIL ON THE INSIDE SHOULDER OF ANY CURVE.

③ UNIFORMLY TENSION ALL CABLES TO COMPRESS SPRINGS BY 90 mm.

④ DO NOT INSTALL CABLE GUARDRAIL FOR OBSTACLES WITHIN 3.7 m OF THE INSTALLATION LINE.

⑤ DO NOT USE CABLE GUARDRAIL WITH FILL SLOPES STEEPER THAN 2:1, UNLESS THE DISTANCE BETWEEN THE BACK OF THE POSTS AND THE BREAK IN THE FILL SLOPE IS AT LEAST 2.5 m.

⑥ ATTACH REFLECTORS TO EVERY OTHER LINE POST (9.76 m TYP.), BEGINNING AT POST P3. DO NOT ATTACH REFLECTORS TO POSTS P1 AND P2.

⑦ WIDENING IS REQUIRED IF FINISHED SHOULDER IS LESS THAN 0.6 m FROM THE TRAFFIC LANE.

✱ SEE DTL. DWG. NO. 606-80 FOR SCHEDULE OF GUARDRAIL HARDWARE.

ALL DIMENSIONS ARE MILLIMETERS (mm) UNLESS OTHERWISE NOTED.

DETAILED DRAWING	
REFERENCE STANDARD SPEC. SECTION 606	DWG. NO. 606-40
CABLE GUARDRAIL	
EFFECTIVE: FEBRUARY 2005	
serving you with pride	MONTANA DEPARTMENT OF TRANSPORTATION

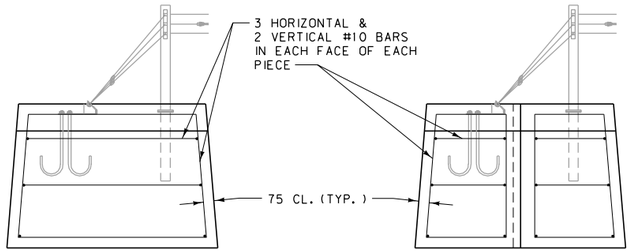

ONE PIECE

TWO PIECE

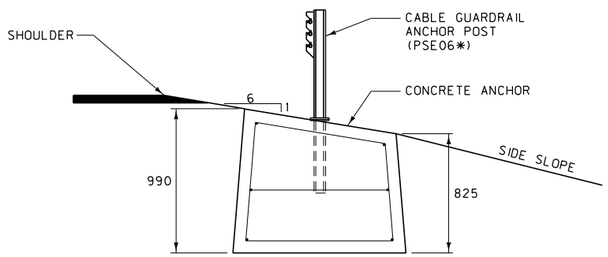

ANCHOR UNIT & RE-BAR INSTALLATION DETAILS

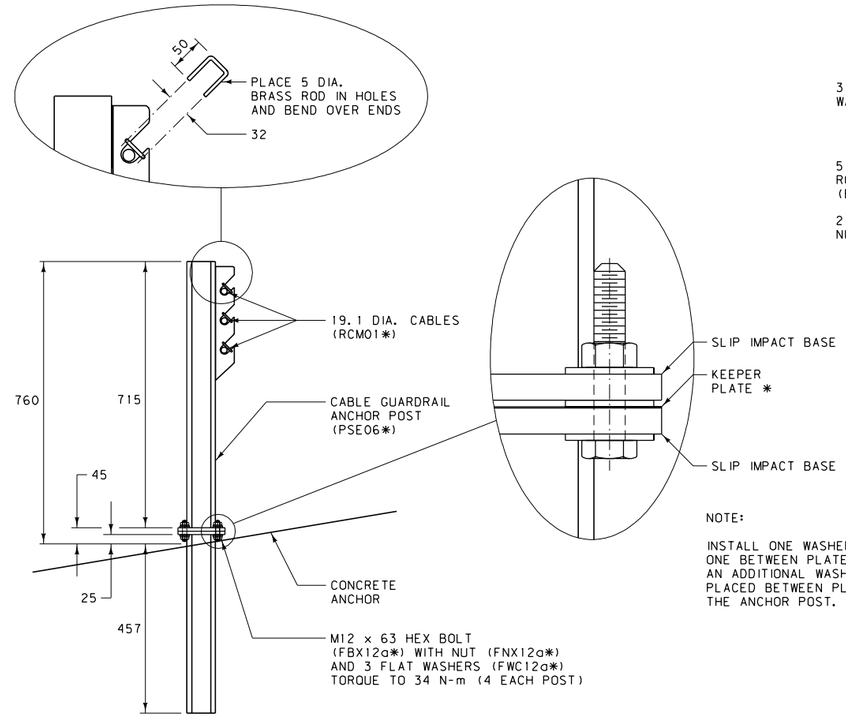

NOTE:

INSTALL ONE WASHER UNDER HEAD, ONE BETWEEN PLATES & ONE UNDER NUT. AN ADDITIONAL WASHER MAY BE PLACED BETWEEN PLATES TO PLUMB THE ANCHOR POST.

ANCHOR POST DETAIL

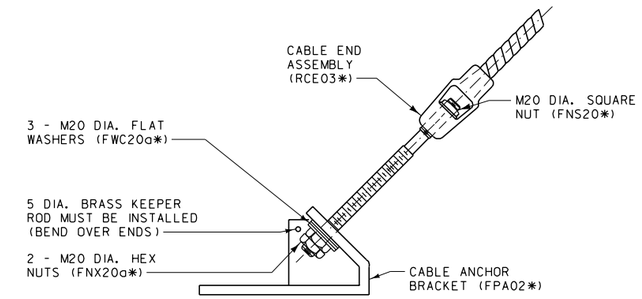

CABLE END ASSEMBLY TO ANCHOR BRACKET DETAIL

NOTES:

1. INSTALL THE CONCRETE ANCHOR INTO THE EXCAVATION, AS DETAILED, SO THAT THE BOTTOM OF THE ANCHOR HAS A FULL AND EVEN BEARING ON THE SURFACE UNDER IT. BACKFILL AROUND THE CONCRETE ANCHOR IN ACCORDANCE WITH SECTION 203.03.3 OF THE STANDARD SPECIFICATIONS.

2. THE CONCRETE ANCHOR CAN BE PLACED AS ONE OR TWO PIECES. THIS DETAIL PRIMARILY SHOWS A TWO PIECE INSTALLATION. FOR ONE PIECE INSTALLATIONS, USE ALL THE SAME DIMENSIONS, LESS THE TAPERED KEYWAY AND THE ADDITIONAL REBAR, AS SHOWN.

3. IF LIFTING DEVICES ARE EMBEDDED INTO THE CONCRETE ANCHORS, INSURE THAT THEY HAVE A SAFE WORKING LOAD OF 3.6 METRIC TONS FOR THE ONE PIECE ANCHOR AND 1.8 METRIC TONS EACH FOR EACH OF THE HALVES OF THE TWO PIECE ANCHOR UNIT.

4. USE CLASS "DD" CONCRETE TO CONSRUCT ANCHOR.

* SEE DTL. DWG. NO. 606-80 FOR SCHEDULE OF GUARDRAIL HARDWARE.

TAPERED KEYWAY DETAIL
(TWO PIECE INSTALLATION)

NOTE:

DIMENSIONS FOR LEFT AND RIGHT HAND ANCHOR UNITS ARE THE SAME, WITH THE POSITION OF THE ANCHOR POST AND ANCHOR BRACKET BEING THE ONLY DIFFERENCE.

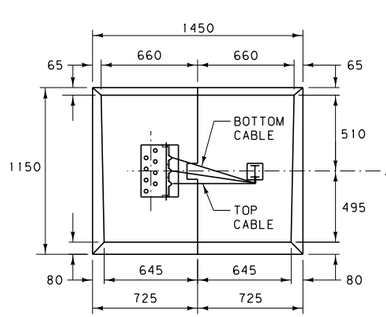

PLAN
(LEFT HAND ANCHOR UNIT)

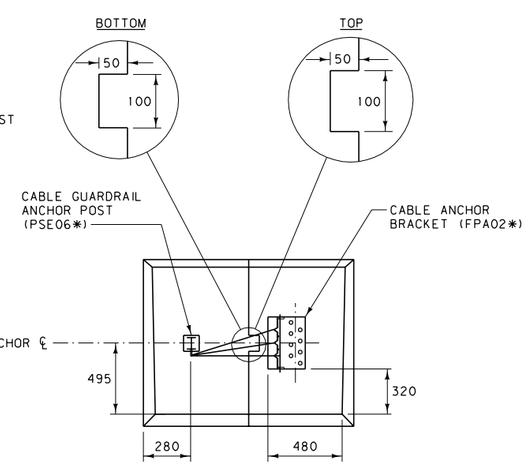

PLAN
(RIGHT HAND ANCHOR UNIT)

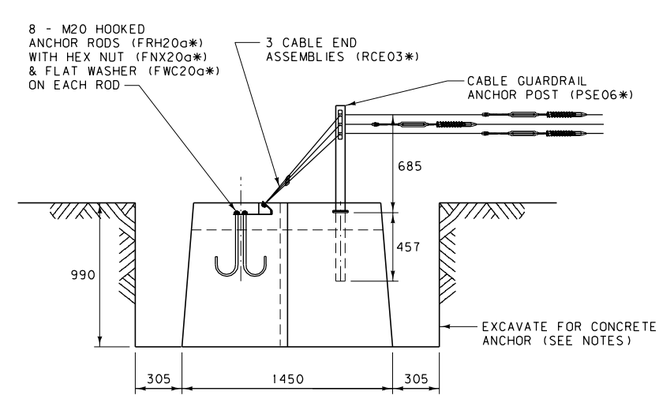

ELEVATION
(LEFT HAND ANCHOR UNIT)

ALL DIMENSIONS ARE MILLIMETERS (mm) UNLESS OTHERWISE NOTED.

DETAILED DRAWING	
REFERENCE STANDARD SPEC. SECTION 606	DWG. NO. 606-41
CABLE GUARDRAIL TERMINAL ANCHOR ASSEMBLY	
EFFECTIVE: FEBRUARY 2005	
serving you with pride	MONTANA DEPARTMENT OF TRANSPORTATION

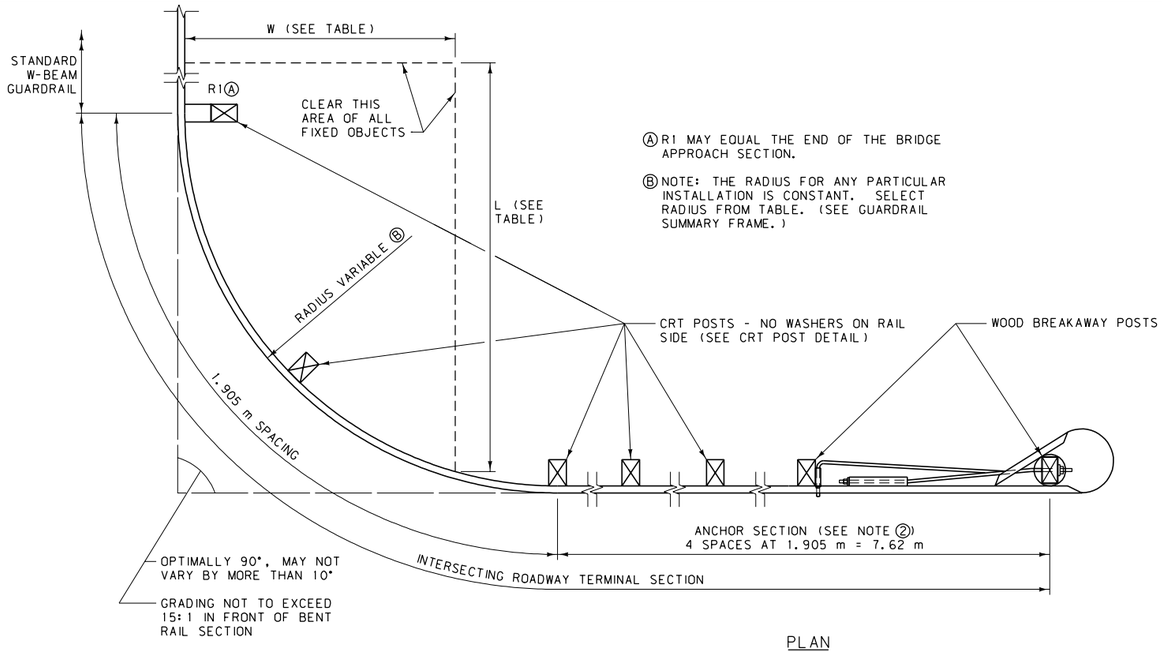

Ⓐ R1 MAY EQUAL THE END OF THE BRIDGE APPROACH SECTION.

Ⓑ NOTE: THE RADIUS FOR ANY PARTICULAR INSTALLATION IS CONSTANT. SELECT RADIUS FROM TABLE. (SEE GUARDRAIL SUMMARY FRAME.)

PLAN

RADIUS TABLE			
RADIUS	LENGTH OF BENT RAIL	L	W
2450	3.81 m	7.6 m	4.6 m
4850	7.62 m	9.1 m	4.6 m
7300	11.43 m	12.2 m	6.1 m
9700	15.24 m	15.2 m	6.1 m

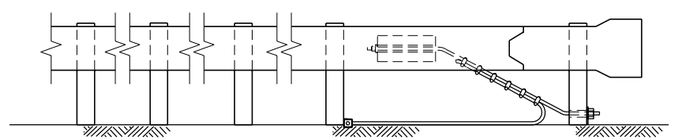

ELEVATION

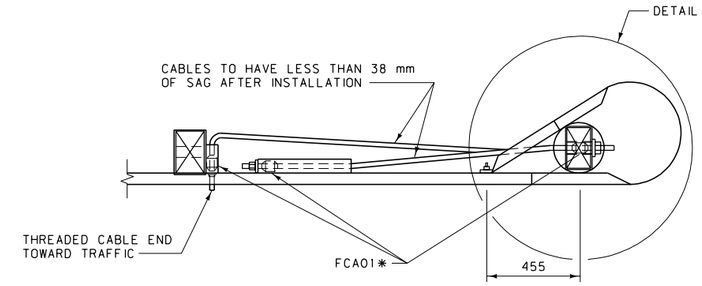

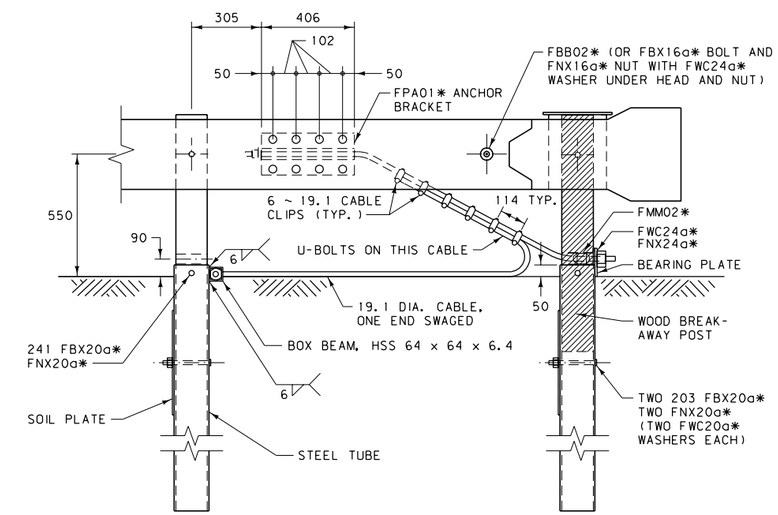

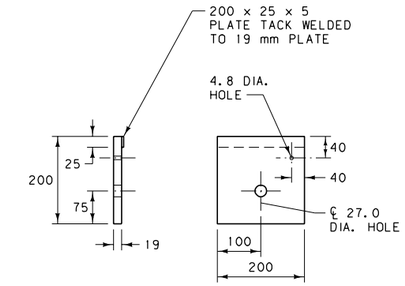

BEARING PLATE DETAIL

FPB01✱

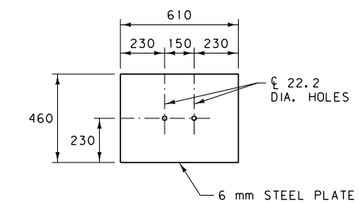

SOIL PLATE DETAIL

PLS03✱

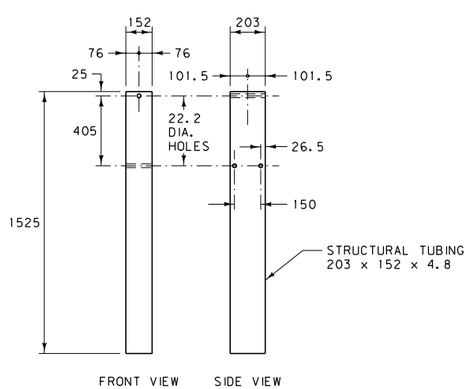

STEEL TUBE DETAILS

PTE05✱

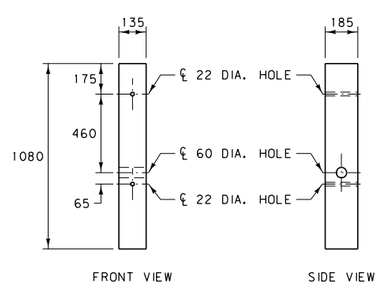

WOOD BREAKAWAY POST DETAILS

PDF01✱

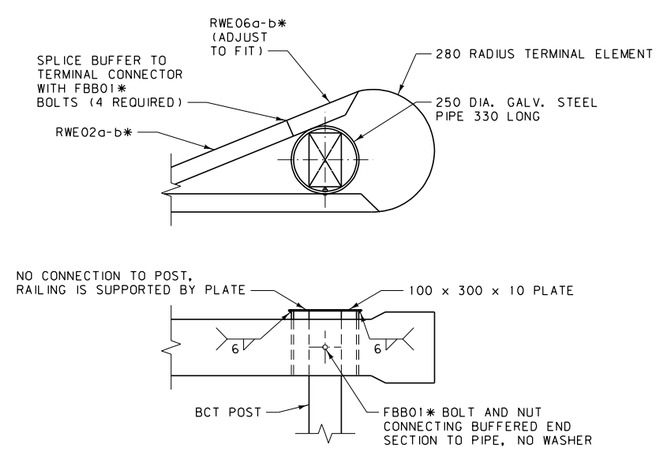

DETAIL A

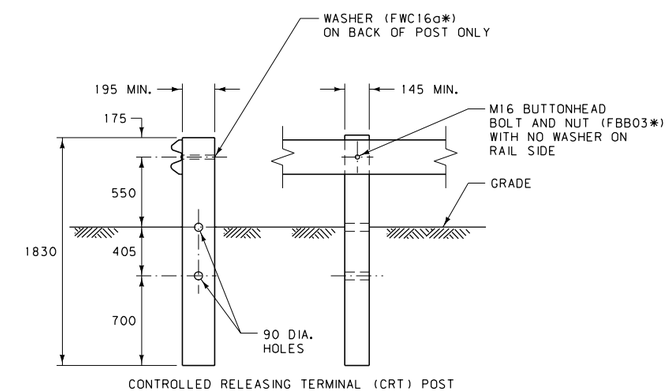

CRT POST DETAIL

PDE09✱

NOTES:

① DO NOT INSTALL ON SLOPES STEEPER THAN 2:1.

② DO NOT OMIT OR SHORTEN ANCHOR SECTION.

③ SEE DTL. DWG. NO. 606-05A FOR GUARDRAIL WIDENING REQUIREMENTS.

✱ SEE DTL. DWG. NO. 606-80 FOR SCHEDULE OF GUARDRAIL HARDWARE.

ALL DIMENSIONS ARE MILLIMETERS (mm) UNLESS OTHERWISE NOTED.

DETAILED DRAWING	
REFERENCE STANDARD SPEC. SECTION 606	DWG. NO. 606-46
INTERSECTING ROADWAY TERMINAL SECTION	
EFFECTIVE: FEBRUARY 2005	
serving you with pride	MONTANA DEPARTMENT OF TRANSPORTATION

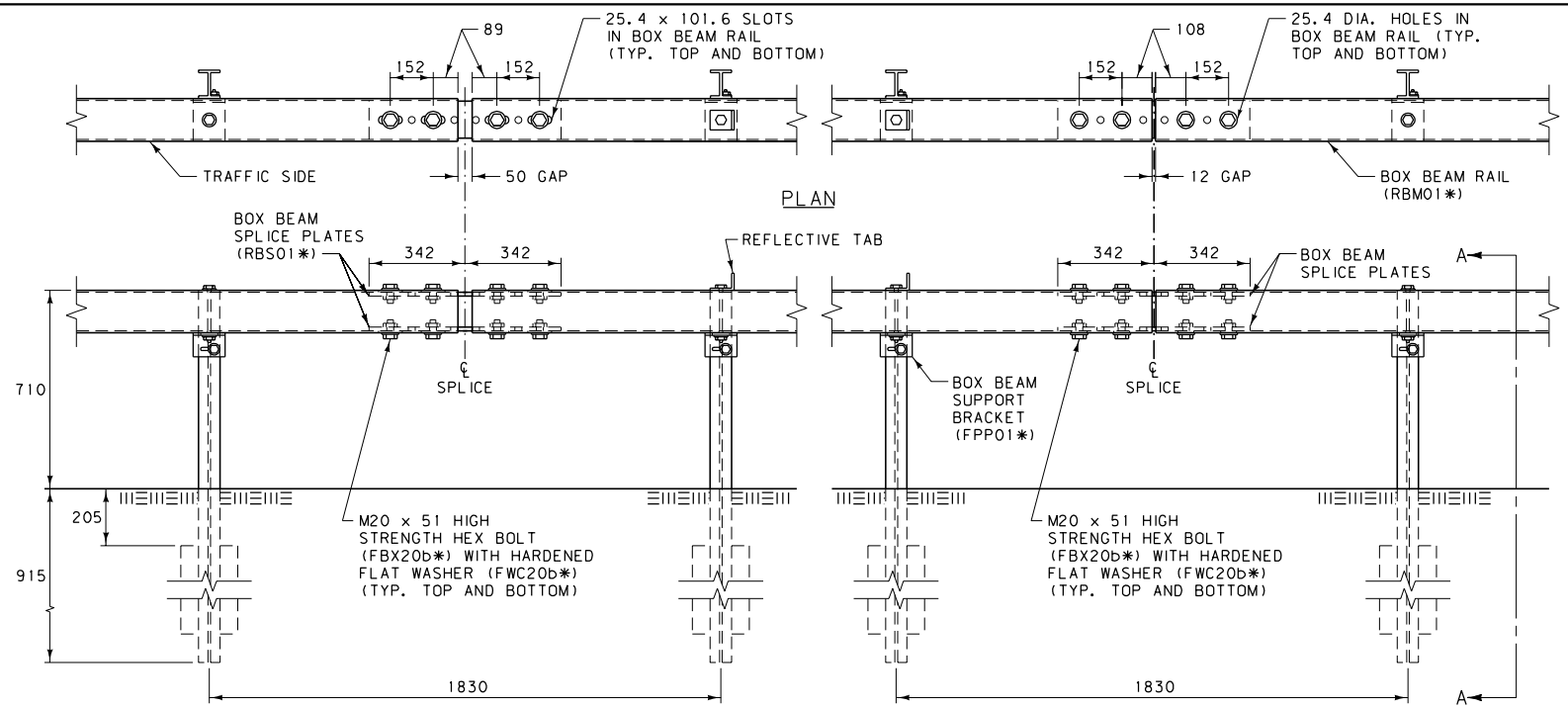

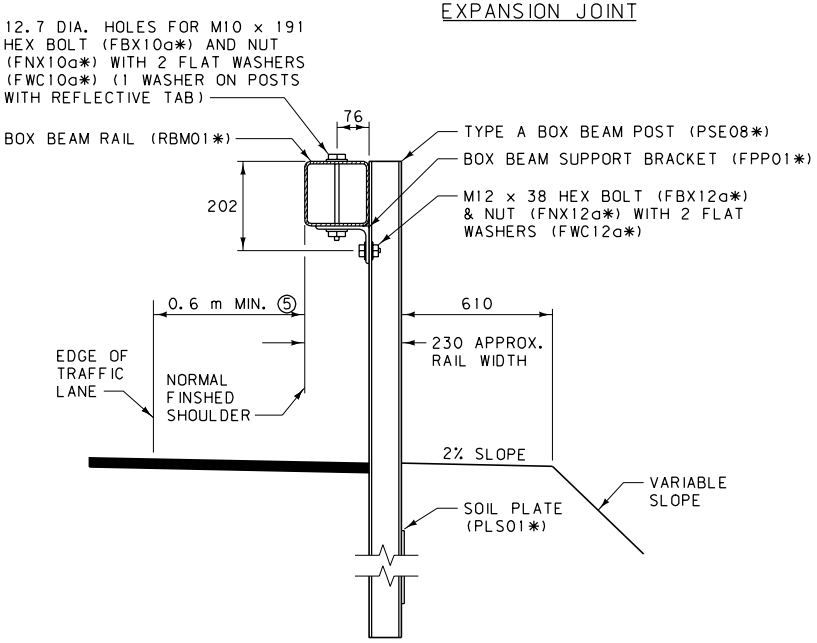

NOTES:

① USE BOX BEAM RAIL IN MINIMUM NOMINAL LENGTHS OF 5.49 m UNLESS APPROVED BY THE ENGINEER.

② INSTALL EXPANSION JOINTS ON ALL BOX BEAM GUARDRAIL INSTALLATIONS GREATER THAN 90 m IN LENGTH AT INTERVALS NOT TO EXCEED 150 m.

③ ATTACH REFLECTIVE TABS TO EVERY FOURTH POST (7.32 m TYP.) ANGLE TABS SLIGHTLY TOWARDS TRAFFIC. DO NOT USE REFLECTIVE TABS ON WY-BET TERMINALS. WY-BET TERMINALS RECEIVE REFLECTIVE CHANNELS.

④ DO NOT INSTALL BOX BEAM GUARDRAIL FOR OBSTACLES WITHIN 1.52 m OF THE BACK OF THE RAIL.

⑤ WIDENING IS REQUIRED IF FINISHED SHOULDER IS LESS THAN 0.6 m FROM THE TRAFFIC LANE.

* SEE DTL. DWG. NO. 606-80 FOR SCHEDULE OF GUARDRAIL HARDWARE.

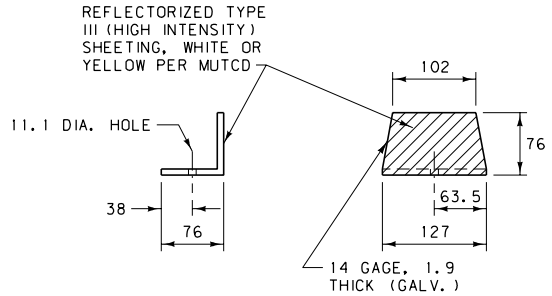

REFLECTIVE TAB

ALL DIMENSIONS ARE MILLIMETERS (mm) UNLESS OTHERWISE NOTED.

DETAILED DRAWING	
REFERENCE STANDARD SPEC. SECTION 606	DWG. NO. 606-50
BOX BEAM GUARDRAIL	
EFFECTIVE: FEBRUARY 2005	

MDT serving you with pride — MONTANA DEPARTMENT OF TRANSPORTATION

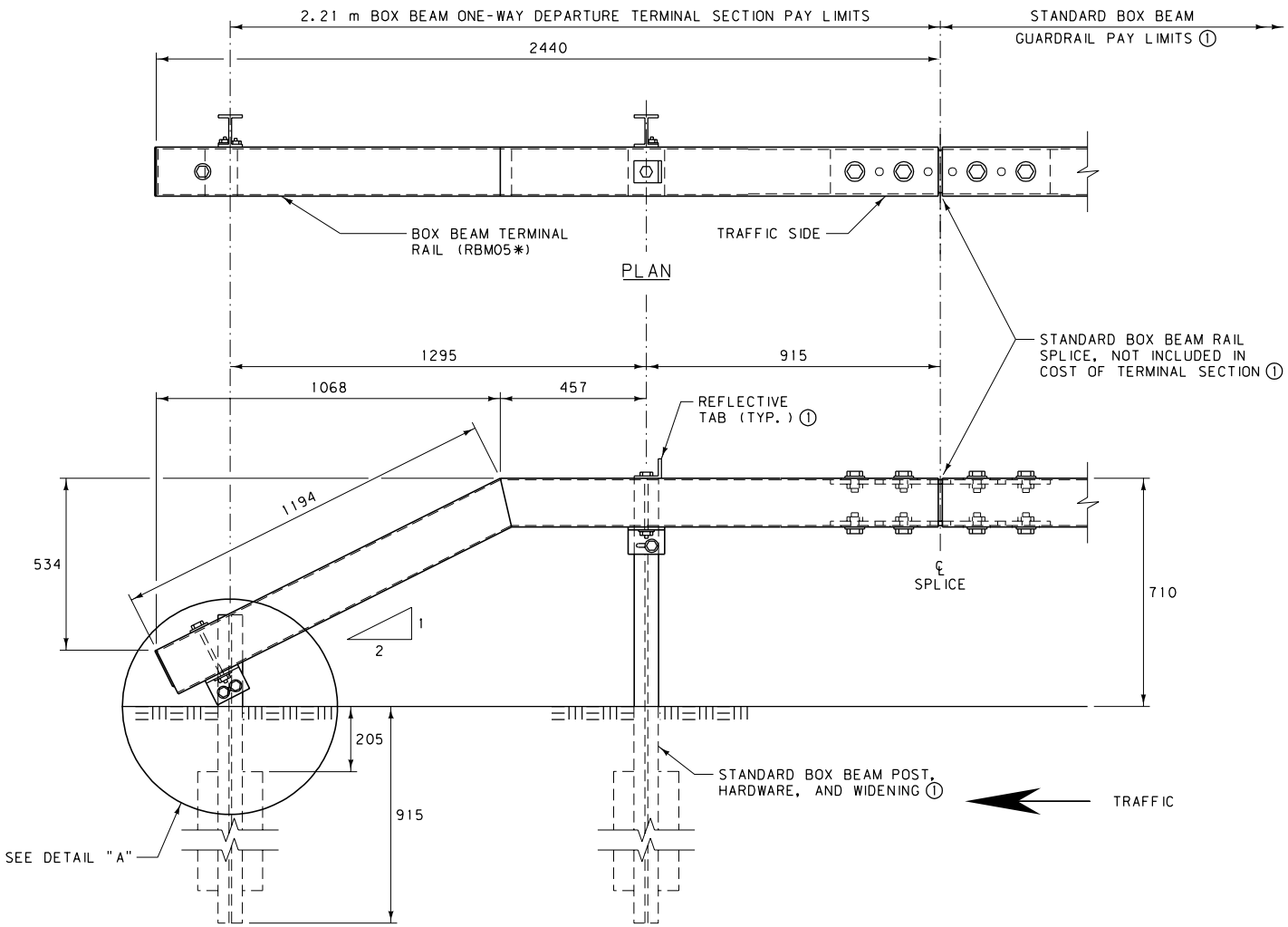

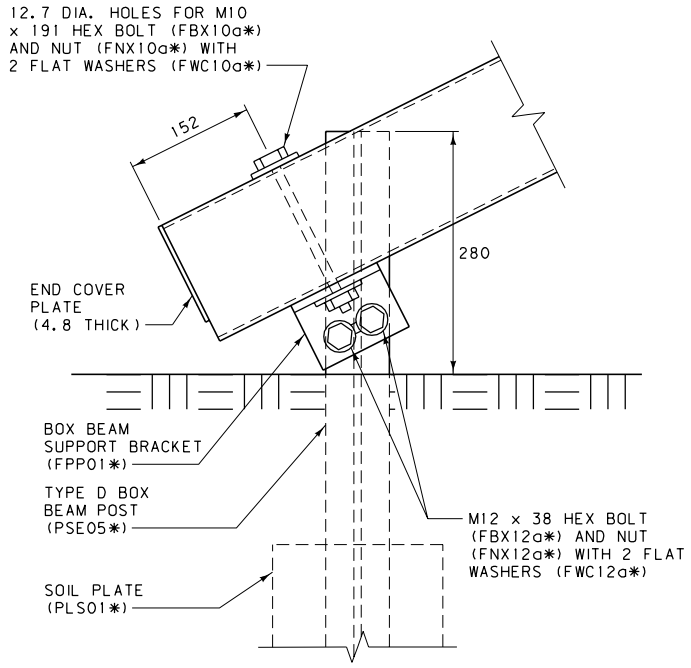

NOTES:

① SEE DTL. DWG. NO. 606-50 FOR STANDARD BOX BEAM GUARDRAIL AND ASSOCIATED DETAILS.

✱ SEE DTL. DWG. NO. 606-80 FOR SCHEDULE OF GUARDRAIL HARDWARE.

ALL DIMENSIONS ARE MILLIMETERS (mm) UNLESS OTHERWISE NOTED.

DETAILED DRAWING	
REFERENCE STANDARD SPEC. SECTION 606	DWG. NO. 606-52
BOX BEAM ONE-WAY DEPARTURE TERMINAL SECTION	
EFFECTIVE: FEBRUARY 2005	
serving you with pride	MONTANA DEPARTMENT OF TRANSPORTATION

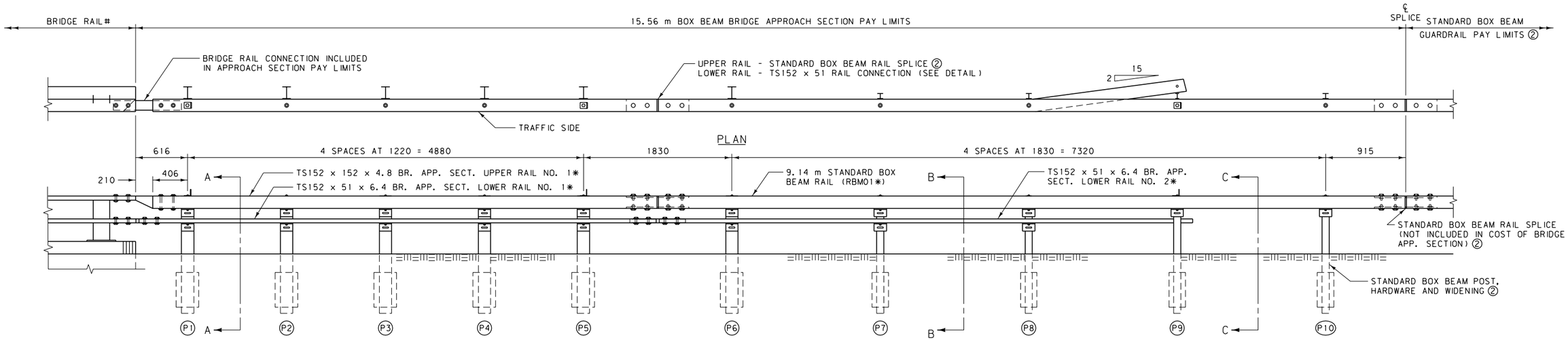

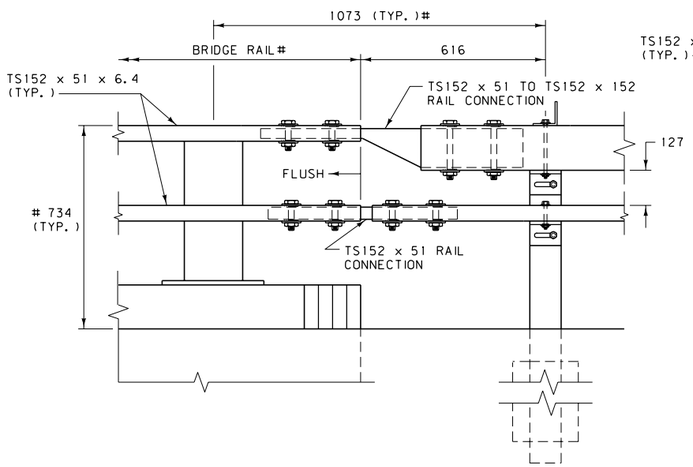

BOX BEAM - BRIDGE APPROACH SECTION TYPE 1

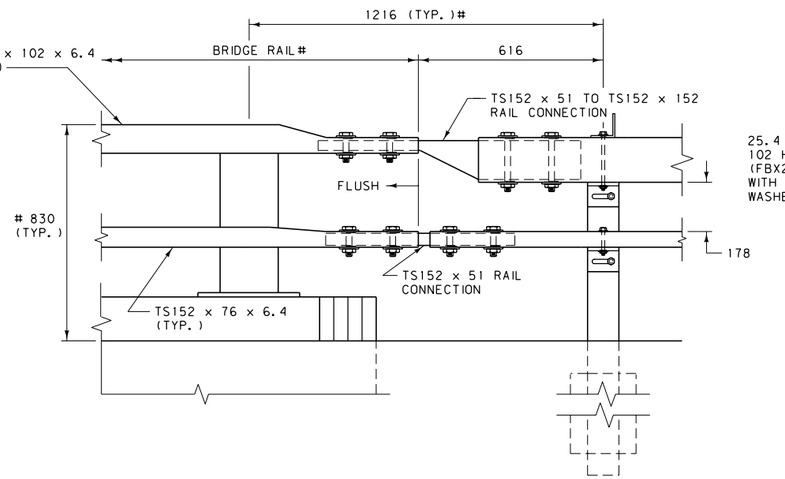

BOX BEAM - BRIDGE APPROACH SECTION TYPE 2

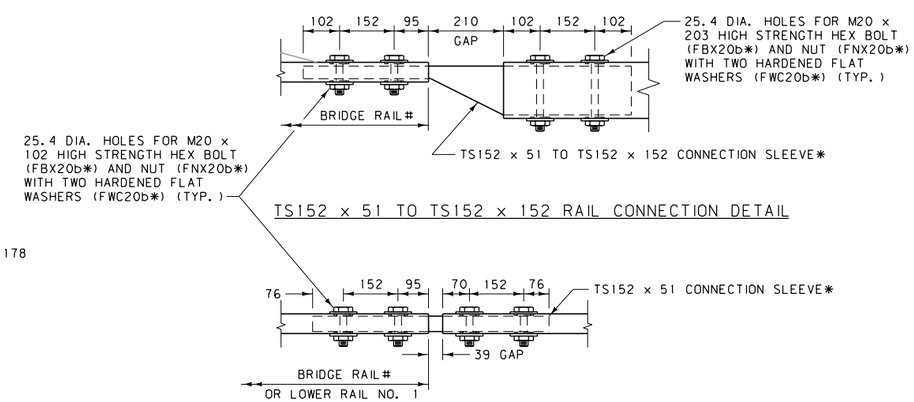

NOTES:

① WIDENING IS REQUIRED IF FINISHED SHOULDER IS LESS THAN 0.6 m FROM THE TRAFFIC LANE.

② SEE DTL. DWG. NO. 606-50 FOR STANDARD BOX BEAM GUARDRAIL AND ASSOCIATED DETAILS.

* SEE DTL. DWG. NO. 606-80 FOR SCHEDULE OF GURADRAIL HARDWARE.

SEE BRIDGE PLANS.

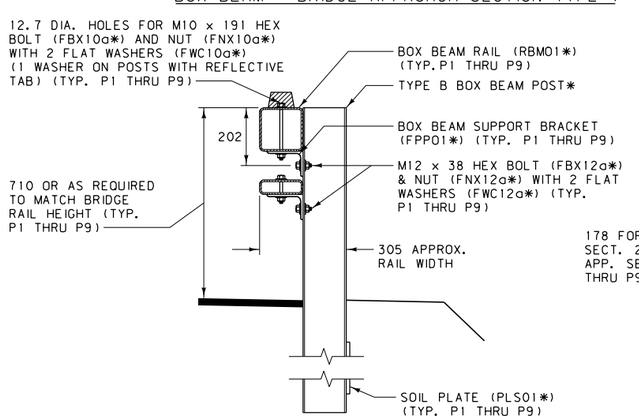

SECTION A-A
(TYP. AT POSTS P1 THRU P6)

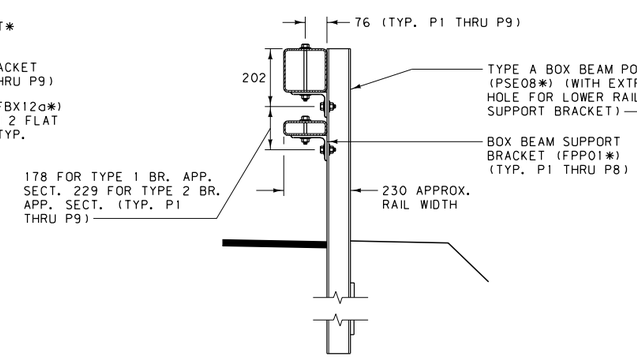

SECTION B-B
(TYP. AT POSTS P7 & P8)

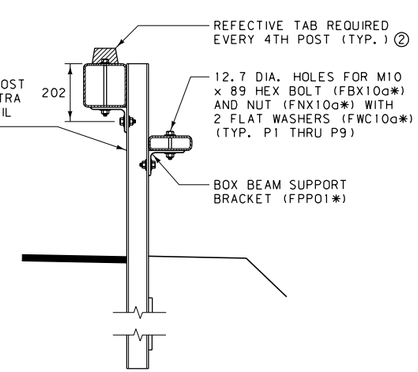

SECTION C-C
(POST P9)

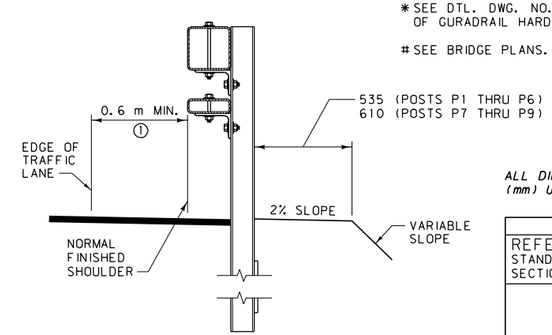

GUARDRAIL WIDENING DETAIL
(TYP AT POST P1 THRU P9)

ALL DIMENSIONS ARE MILLIMETERS (mm) UNLESS OTHERWISE NOTED.

DETAILED DRAWING	
REFERENCE STANDARD SPEC. SECTION 606	DWG. NO. 606-53
BOX BEAM BRIDGE APPROACH SECTIONS	
EFFECTIVE: FEBRUARY 2005	
serving you with pride	MONTANA DEPARTMENT OF TRANSPORTATION

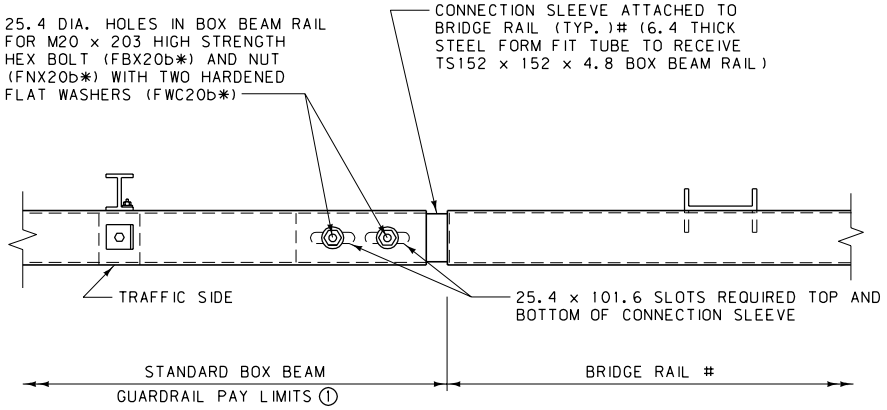

PLAN

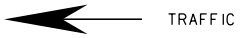

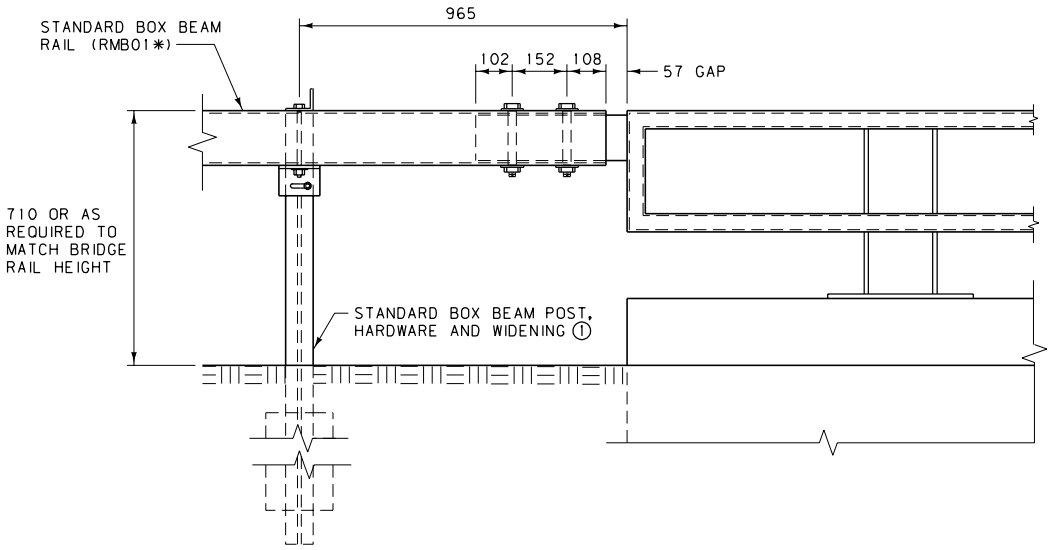

ELEVATION

NOTES:

1. SEE DTL. DWG. NO. 606-50 FOR STANDARD BOX BEAM GUARDRAIL AND ASSOCIATED DETAILS.
2. USE ON EXIT END OF ONE-WAY TRAFFIC BRIDGES ONLY.

* SEE DTL. DWG. NO. 606-80 FOR SCHEDULE OF GUARDRAIL HARDWARE.

\# SEE BRIDGE PLANS FOR MORE DETAILED INFORMATION ON BRIDGE RAIL AND CONNECTION DETAILS.

ALL DIMENSIONS ARE MILLIMETERS (mm) UNLESS OTHERWISE NOTED.

DETAILED DRAWING	
REFERENCE STANDARD SPEC. SECTION 606	DWG. NO. 606-54
BOX BEAM ONE-WAY BRIDGE DEPARTURE SECTION	
EFFECTIVE: FEBRUARY 2005	
serving you with pride	MONTANA DEPARTMENT OF TRANSPORTATION

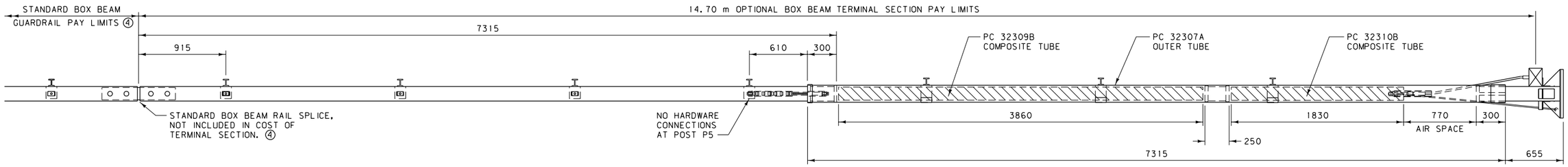

PLAN

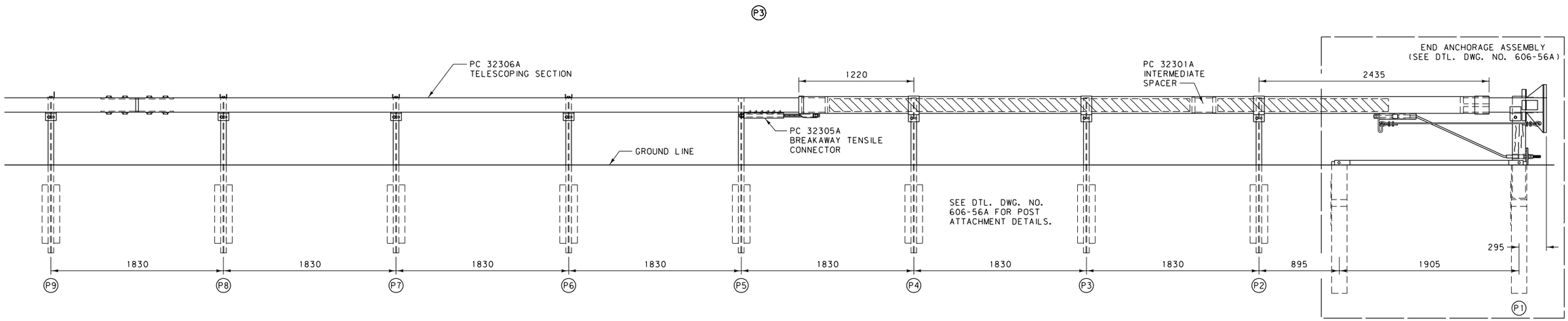

ELEVATION

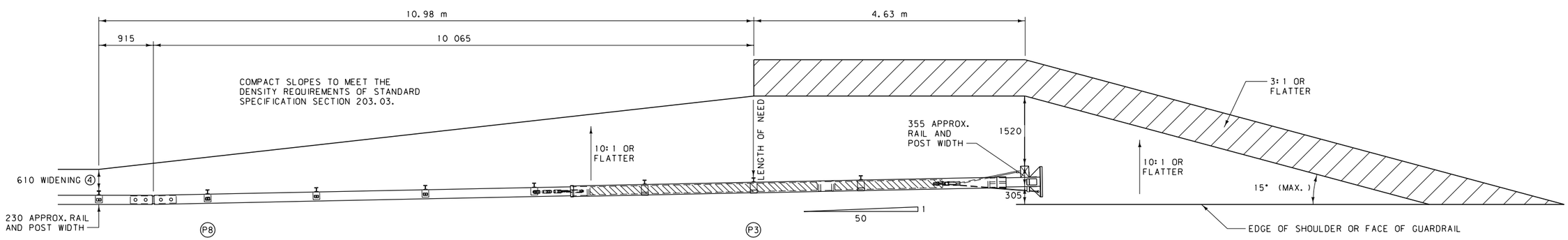

TRAFFIC

NOTES:

① PLACE A SELF-ADHESIVE OBJECT MARKER ON THE FACE OF THE NOSE ASSEMBLY, HAVING ALTERNATING RETRO-REFLECTIVE BLACK AND YELLOW STRIPES SLOPED DOWNWARD AT AN ANGLE OF 45° TOWARDS THE SIDE ON WHICH TRAFFIC IS TO PASS.

② FLARE THE END SECTION AWAY FROM TRAFFIC AT A RATE OF 50:1 FOR 15.24 m (ILLUSTRATED). FLARES OF 50:1 FOR 30.48 m MAY ALSO BE USED. THE FLARE MAY BE OMITTED ON ROADS WITH SHOULDERS GREATER THAN 0.6 m IN WIDTH.

③ OBTAIN ENGINEERS APPROVAL OF MANUFACTURER INSTALLATION OPTIONS WHEN SITE CONDITIONS PREVENT THE USE OF THE OPTION SHOWN ON THIS DETAIL.

④ SEE DTL. DWG. NO. 606-50 FOR STANDARD BOX BEAM GUARDRAIL AND ASSOCIATED DETAILS.

GUARDRAIL WIDENING

ALL DIMENSIONS ARE MILLIMETERS (mm) UNLESS OTHERWISE NOTED.

DETAILED DRAWING	
REFERENCE STANDARD SPEC. SECTION 606	DWG. NO. 606-55A
OPTIONAL BOX BEAM TERMINAL SECTION - WY-BET	
EFFECTIVE: FEBRUARY 2005	
serving you with pride	MONTANA DEPARTMENT OF TRANSPORTATION

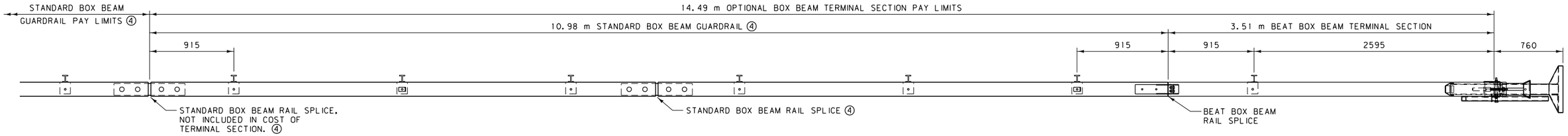

PLAN

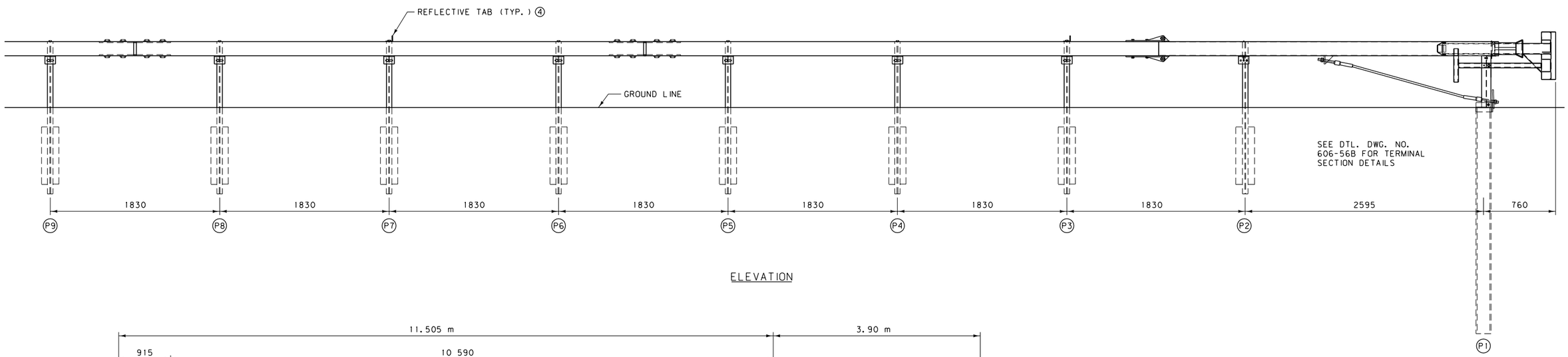

ELEVATION

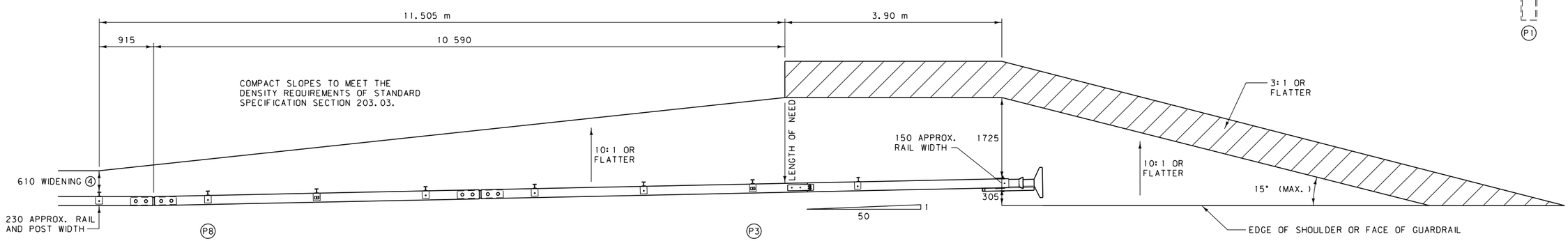

NOTES:

① PLACE A SELF-ADHESIVE OBJECT MARKER ON THE FACE OF THE NOSE ASSEMBLY, HAVING ALTERNATING RETRO-REFLECTIVE BLACK AND YELLOW STRIPES SLOPED DOWNWARD AT AN ANGLE OF 45° TOWARDS THE SIDE ON WHICH TRAFFIC IS TO PASS.

② FLARE THE END SECTION AWAY FROM TRAFFIC AT A RATE OF 50:1 FOR 15.24 m (ILLUSTRATED). FLARES OF 50:1 FOR 30.48 m MAY ALSO BE USED. THE FLARE MAY BE OMITTED ON ROADS WITH SHOULDERS GREATER THAN 0.6 m IN WIDTH.

③ OBTAIN ENGINEERS APPROVAL OF MANUFACTURER INSTALLATION OPTIONS WHEN SITE CONDITIONS PREVENT THE USE OF THE OPTION SHOWN ON THIS DETAIL.

④ SEE DTL. DWG. NO. 606-50 FOR STANDARD BOX BEAM GUARDRAIL AND ASSOCIATED DETAILS.

GUARDRAIL WIDENING

ALL DIMENSIONS ARE MILLIMETERS (mm) UNLESS OTHERWISE NOTED.

DETAILED DRAWING	
REFERENCE STANDARD SPEC. SECTION 606	DWG. NO. 606-55B
OPTIONAL BOX BEAM TERMINAL SECTION - BEAT	
EFFECTIVE: FEBRUARY 2005	
serving you with pride	MONTANA DEPARTMENT OF TRANSPORTATION

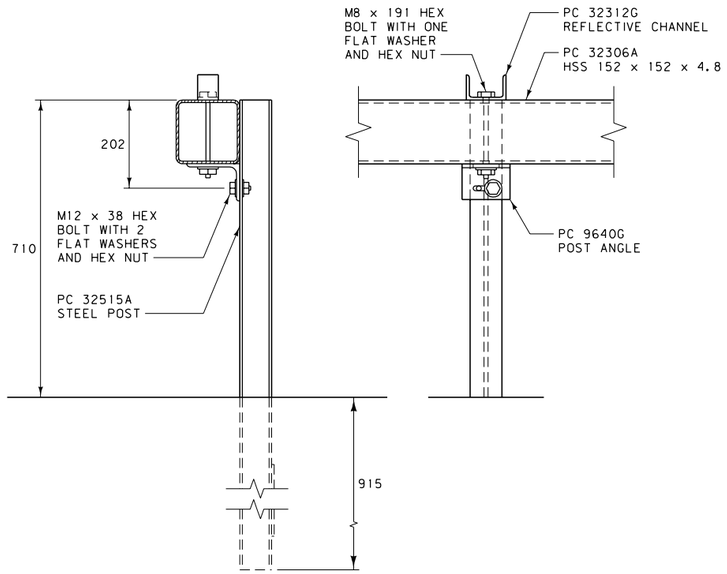

POST ATTACHMENT DETAIL
(TYP. AT POSTS P6, P7 AND P8)

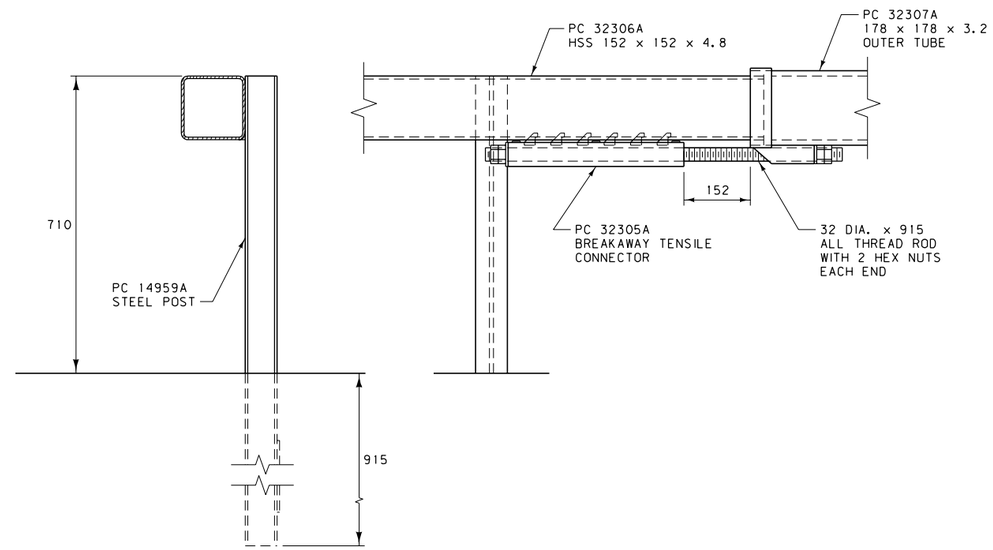

POST ATTACHMENT DETAIL
(POST P5)

BILL OF MATERIAL		
PC	QTY	DESCRIPTION
706G	1	PIPE SLEEVE, 50 DIA. x 150
721G	1	PLATE WASHER, 75 x 100 x 10
722G	1	NOSE RESTRAINT CABLE BRACKET
736G	2	STEEL TUBE, 152 x 203 x 1525
766G	2	SOIL PLATE, 460 x 610 x 6
774A	1	SLOTTED BEARING PLATE
3000G	1	CABLE ASSEMBLY
3148G	2	6 DIA. x 51 LAG SCREW
3240G	3	M8 ROUND WASHER
3245G	3	M8 HEX NUT
3254G	3	10 DIA. x 38 LAG SCREW
3255G	5	M10 ROUND WASHER
3264G	2	10 DIA. x 127 LAG SCREW
3350G	4	M16 HEX NUT
3478G	4	M16 x 191 HEX BOLT
3700G	4	M20 ROUND WASHER
3710G	2	M20 HEX NUT
4044G	4	32 DIA. HEX NUT
4066B	1	WOOD POST, 150 x 200 x 1080
4106B	3	RUBBER PAD, 38.1 x 88.9 x 101.6
4192G	4	6.4 mm CABLE CLAMP
4300G	18	M12 ROUND WASHER
4303G	9	M12 HEX NUT
4308G	9	M12 x 38 HEX BOLT
4719G	2	M20 x 254 HEX BOLT
4902G	2	M24 ROUND WASHER
4903G	4	M24 HEX NUT
5044G	1	AIRCRAFT CABLE, 6.4 DIA. x 2080
5092G	2	6.4 mm AIRCRAFT CABLE THIMBLE
5188G	3	M8 x 191 HEX BOLT
5423G	1	32 DIA. x 915 ALL THREAD ROD
9640G	3	POST ANGLE, 127 x 89 x 9.5 x 115
9641G	3	SHELF ANGLE, 115 x 3.2 x 486
9642G	1	SHELF ANGLE, 115 x 3.2 x 283
9852A	1	STRUT AND YOKE ASSEMBLY
14959A	1	1625 mm STEEL POST
32300A	1	WY-BET NOSE ASSEMBLY
32301A	1	HSS 152 x 152 x 250 INTERMEDIATE SPACER
32305A	1	BREAKAWAY TENSILE CONNECTOR
32306A	1	HSS 152 x 152 x 4.8 TELESCOPING SECTION
32307A	1	OUTER TUBE
32309B	1	152.4 O.D. x 6.4 x 3860 COMPOSITE TUBE
32310B	1	152.4 O.D. x 3.2 x 1830 COMPOSITE TUBE
32312G	3	REFLECTOR CHANNEL
32515A	6	1625 mm STEEL POST

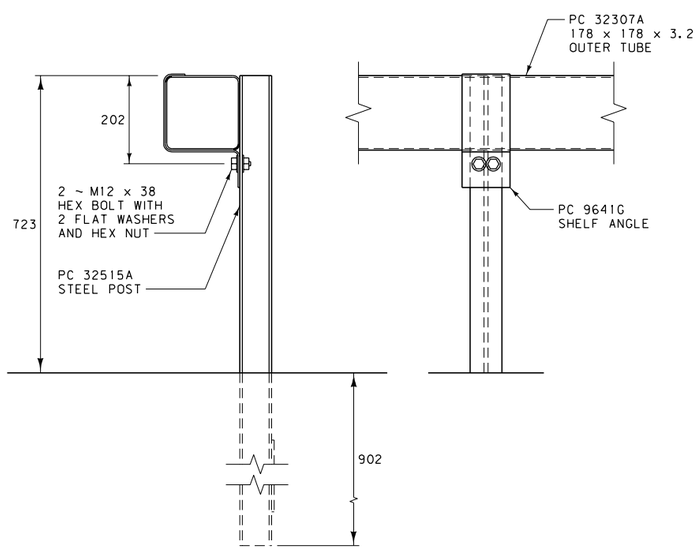

POST ATTACHMENT DETAIL
(TYP. AT POSTS P2, P3 AND P4)

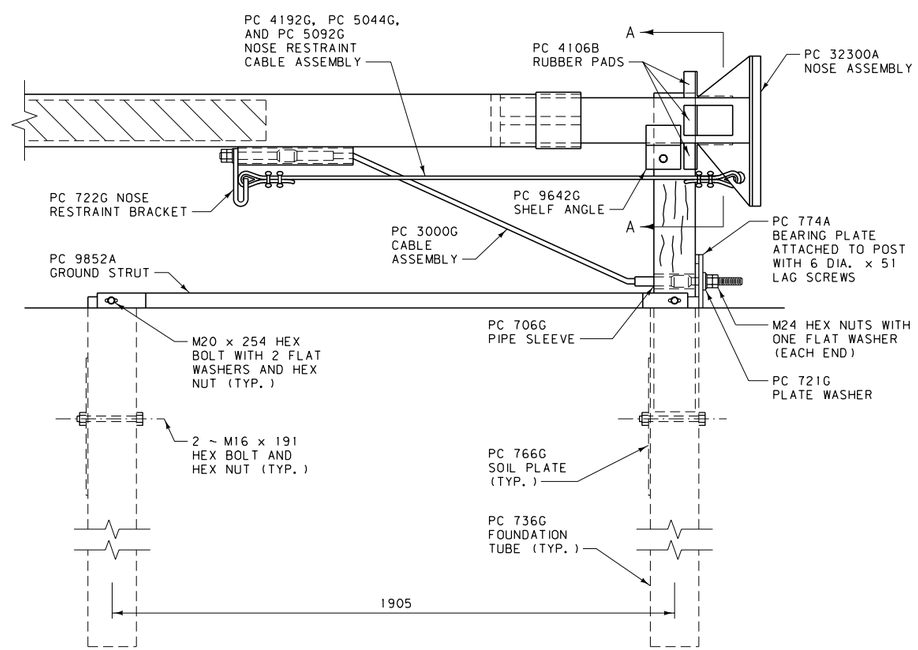

END ANCHORAGE ASSEMBLY

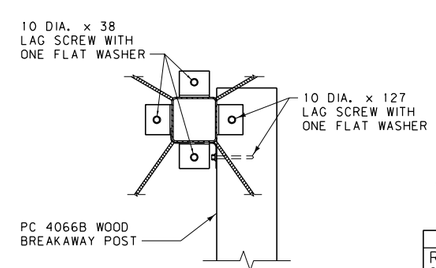

SECTION A-A

ALL DIMENSIONS ARE MILLIMETERS (mm) UNLESS OTHERWISE NOTED.

DETAILED DRAWING

REFERENCE STANDARD SPEC. SECTION 606

DWG. NO. 606-56A

WY-BET BOX
BEAM TERMINAL
SECTION DETAILS

EFFECTIVE: FEBRUARY 2005

MDT serving you with pride — MONTANA DEPARTMENT OF TRANSPORTATION

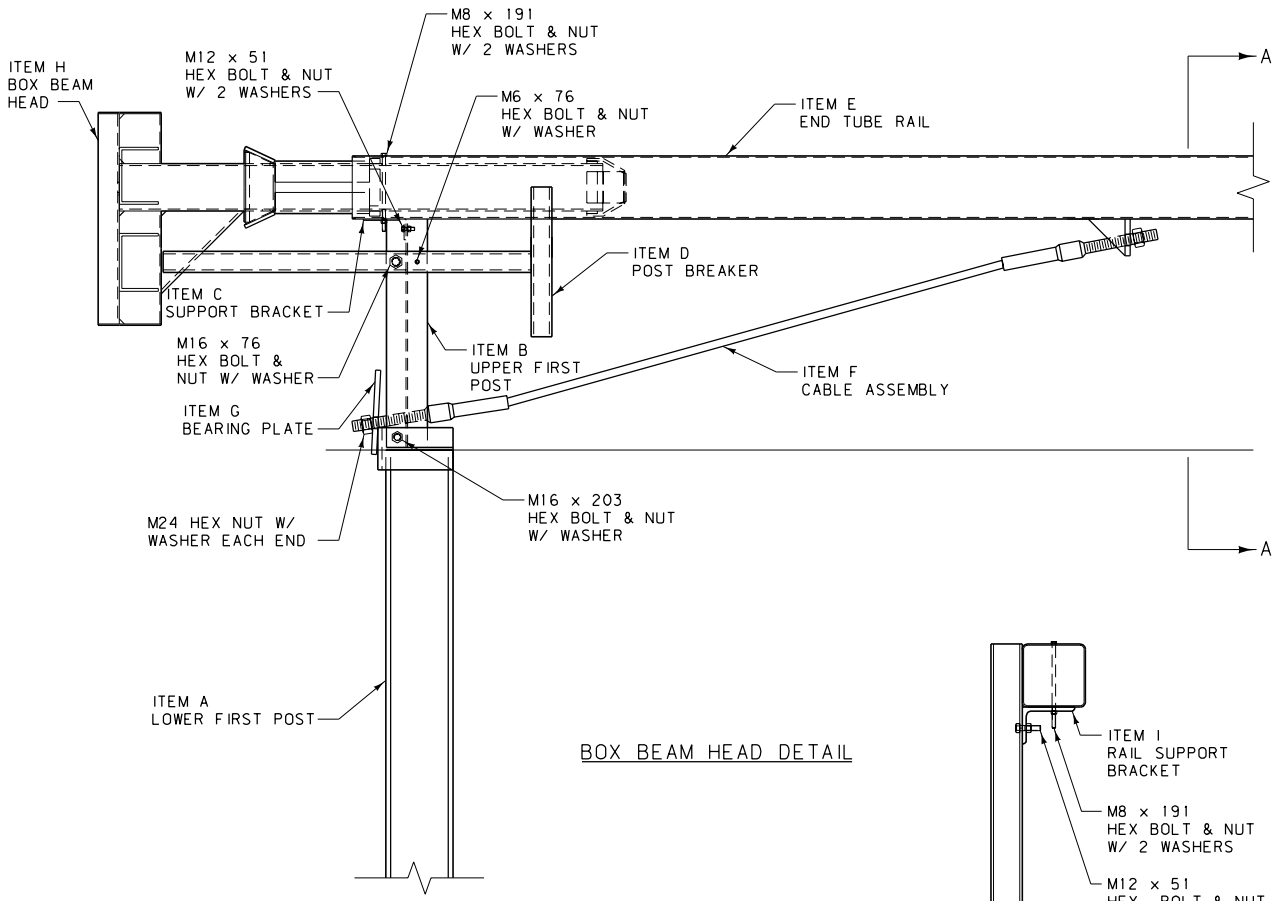

BOX BEAM HEAD DETAIL

BILL OF MATERIAL		
ITEM	QTY	DESCRIPTION
A	1	LOWER FIRST POST, W152 x 22.3 kg/m, 2440 LG.
B	1	UPPER FIRST POST, W152 x 13.4 kg/m, 546 LG.
C	1	SUPPORT BRACKET, 10 GA. (3.5 THK.) BENT PLATE
D	1	POST BREAKER
E	1	END TUBE RAIL, TS 152 x 152 x 3.2 x 3660
F	1	CABLE ASSEMBLY
G	1	BEARING PLATE
H	1	BOX BEAM HEAD
I	1	RAIL SUPPORT BRACKET, L 127 x 89 x 9.5 x 115
J	1	BOX BEAM POST W/ SOIL PLATE
K	2	END TUBE SECTION TIE PLATE
a	2	M8 x 191 HEX BOLT (GRADE 5)
b	1	M6 x 76 HEX BOLT (GRADE 2)
c	2	M12 x 51 HEX BOLT (GRADE 2)
d	8	M16 x 51 HEX BOLT (GRADE 5)
e	1	M16 x 203 HEX BOLT (GRADE 5)
f	1	M16 x 76 HEX BOLT (GRADE 5)
g	2	M8 HEX NUT
h	1	M6 HEX NUT
j	2	M12 HEX NUT
k	14	M16 HEX NUT
n	2	M24 ANCHOR CABLE HEX NUT
p	4	M8 WASHER
q	1	M6 WASHER
r	3	M12 WASHER
s	10	M16 WASHER
u	2	M24 ANCHOR CABLE WASHER

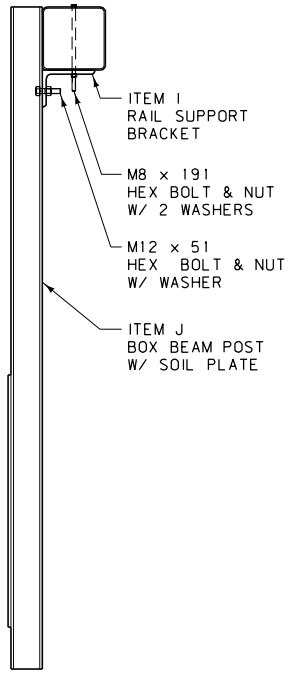

NOTE:

(1) BEAT TERMINAL SECTION TO INCLUDE 10.98 m OF BOX BEAM GUARDRAIL AS SHOWN ON DTL. DWG. NO. 606-55B.

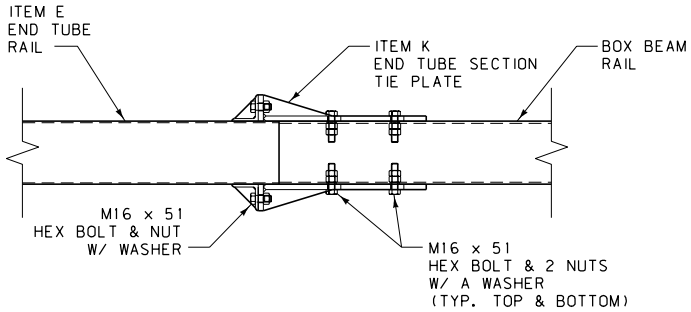

FIRST RAIL TIE DETAIL

SECTION "A-A"

ALL DIMENSIONS ARE MILLIMETERS (mm) UNLESS OTHERWISE NOTED.

DETAILED DRAWING

REFERENCE
STANDARD SPEC.
SECTION 606

DWG. NO.
606-56B

BEAT
BOX BEAM TERMINAL
SECTION DETAILS

EFFECTIVE: FEBRUARY 2005

MDT serving you with pride — MONTANA DEPARTMENT OF TRANSPORTATION

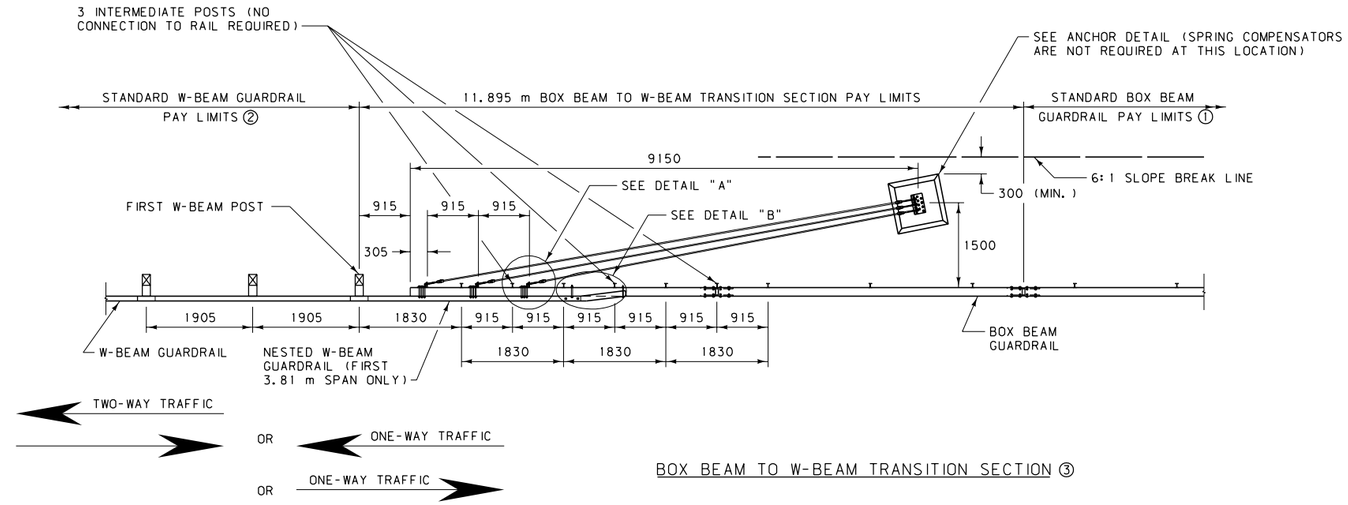

BOX BEAM TO W-BEAM TRANSITION SECTION ③

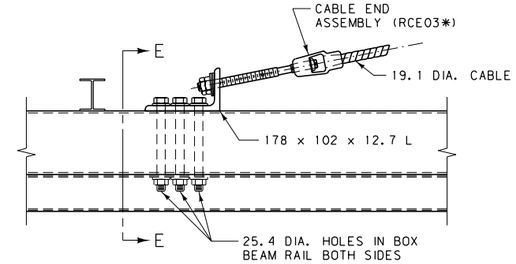

DETAIL A
PLAN

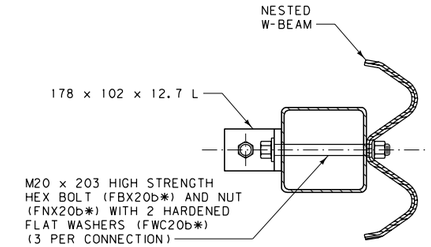

SECTION E-E

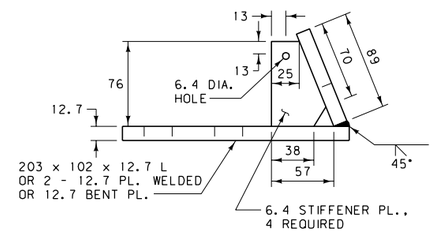

SECTION F-F

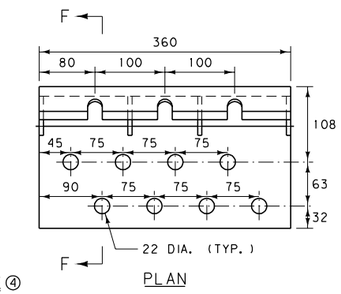

PLAN

ANCHOR ANGLE ④ DETAIL

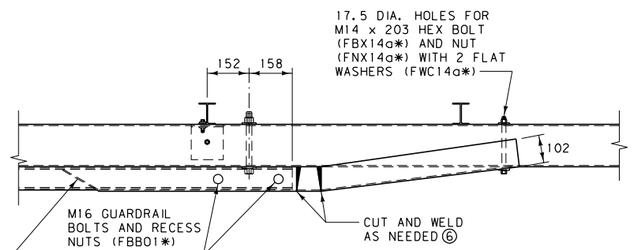

DETAIL B
PLAN

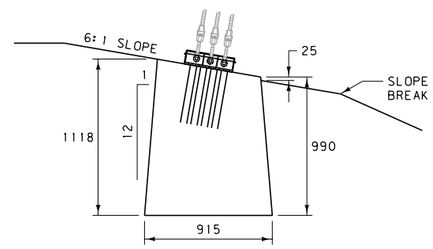

SECTION A-A

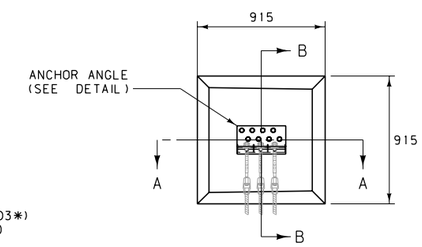

ANCHOR DETAIL ⑤
PLAN

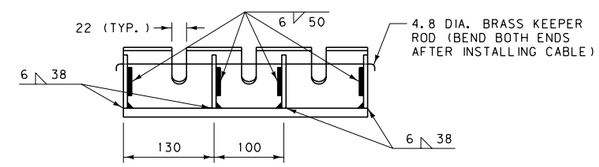

ELEVATION

CUT AND BEND AS NEEDED TO FIT W-BEAM ⑥

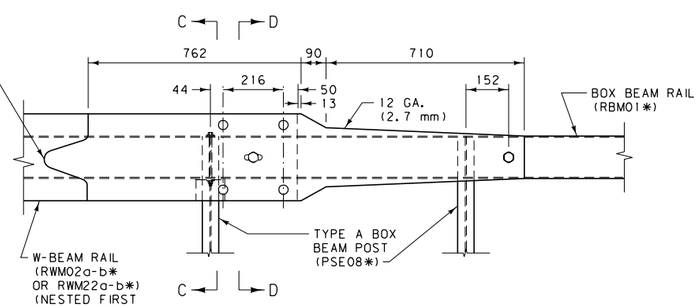

DETAIL B
ELEVATION

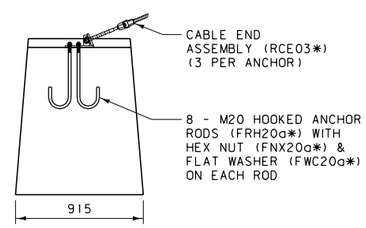

SECTION B-B

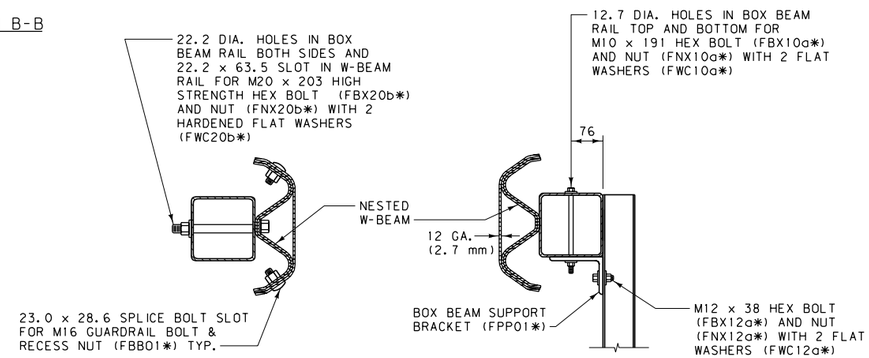

SECTION D-D

SECTION C-C

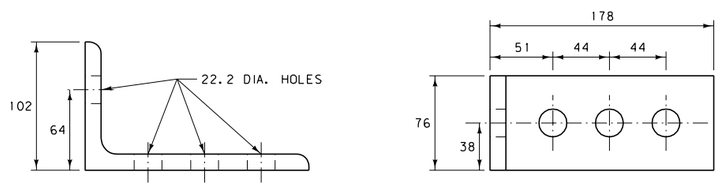

178 x 102 x 12.7 L
DETAIL

NOTES:

① SEE DTL. DWG. NO. 606-50 FOR STANDARD BOX BEAM GUARDRAIL AND ASSOCIATED DETAILS.

② SEE DTL. DWG. NO. 606-05A AND 606-05B FOR STANDARD W-BEAM GUARDRAIL AND ASSOCIATED DETAILS.

③ MANUFACTURE ANCHOR ANGLES USING AASHTO M270M GRADE 250 STEEL. ALL WELDING IS TO CONFORM TO THE APPLICABLE AWS CODE.

④ GALVANIZE ANCHOR ANGLES IN ACCORDANCE WITH AASHTO M111M. NO PUNCHING, DRILLING, WELDING OR CUTTING IS PERMITTED ON COMPONENTS AFTER GALVANIZING.

⑤ USE CLASS "DD" CONCRETE TO CONSTRUCT ANCHOR.

⑥ ANY HOLES, CUTS, SLOTS OR WELDS MADE ON THE W-BEAM OR BOX BEAM RAIL AFTER GALVANIZING IS TO BE PAINTED WITH AN APPROVED GALVANIZING PAINT.

⑦ LAP ALL W-BEAM SPLICES IN THE DIRECTION OF ADJACENT TRAFFIC.

* SEE DTL. DWG. NO. 606-80 FOR SCHEDULE OF GUARDRAIL HARDWARE.

ALL DIMENSIONS ARE MILLIMETERS (mm) UNLESS OTHERWISE NOTED.

DETAILED DRAWING	
REFERENCE STANDARD SPEC. SECTION 606	DWG. NO. 606-58
BOX BEAM TO W-BEAM TRANSITION SECTION	
EFFECTIVE: FEBRUARY 2005	
serving you with pride	MONTANA DEPARTMENT OF TRANSPORTATION

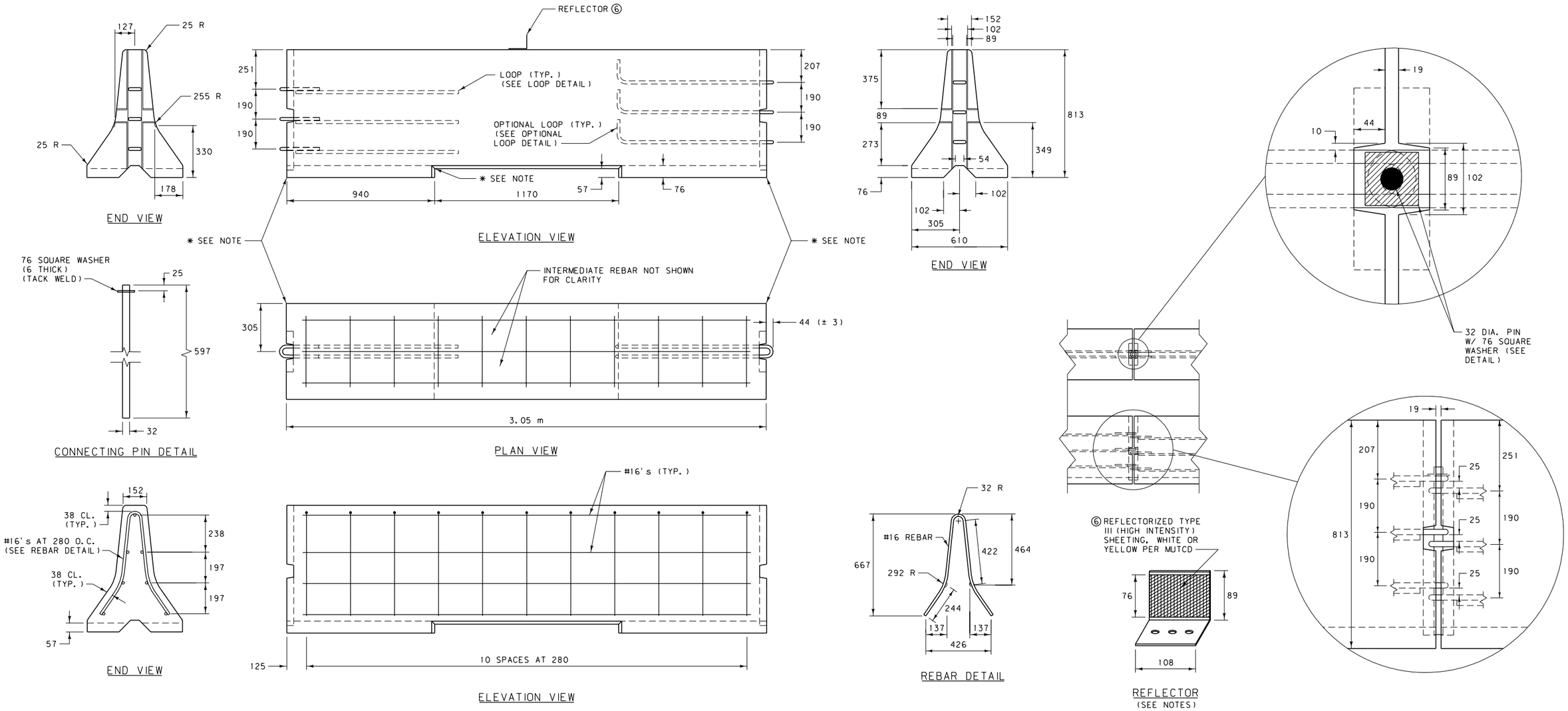

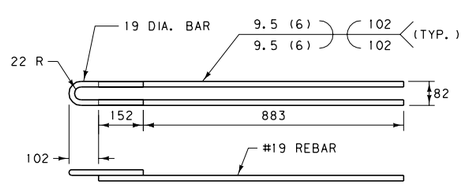

LOOP DETAIL

LOOP FABRICATION REQUIREMENTS:

1. USE REINFORCING STEEL CONFORMING TO ASTM A706M, GRADE 420 FOR REBAR BEING WELDED TO LOOPS.
2. LOOP ENDS CONSIST OF SMOOTH ROUND BARS CONFORMING TO AASHTO M270M, GRADE 250.
3. COLD BEND THE LOOPS BY USING A JIG THAT WILL PRODUCE AN ACCURATE RADIUS WITHOUT MARRING THE BAR. DO NOT HEAT THE BAR TO FACILITATE BENDING.
4. WELD REBAR TO LOOPS USING 3 mm DIA. E8018 ROD. DO NOT TACK WELD THE PIECES TOGETHER PRIOR TO WELDING.
5. USE A CERTIFIED WELDER IN ACCORDANCE WITH THE CURRENT EDITION OF AWS D1.4. DO NOT PLACE THE WELDED ASSEMBLY IN THE FORM UNTIL IT HAS BEEN INSPECTED.
6. NO ADDITIONAL WELDING IS PERMITTED ON THE SMOOTH ROUND BARS OR REINFORCING STEEL.

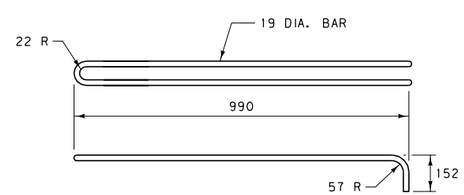

OPTIONAL LOOP DETAIL

OPTIONAL LOOP FABRICATION REQUIREMENTS:

1. USE CONTINUOUS SMOOTH ROUND BARS CONFORMING TO AASHTO M270M, GRADE 250 TO FABRICATE THE OPTIONAL LOOPS.
2. COLD BEND THE LOOPS BY USING A JIG THAT WILL PRODUCE AN ACCURATE RADIUS WITHOUT MARRING THE BAR. DO NOT HEAT THE BAR TO FACILITATE BENDING.
3. NO WELDING IS PERMITTED ON THE SMOOTH ROUND BARS OR REINFORCING STEEL.

NOTES:

① USE CLASS "DD" CONCRETE OR EQUIVALENT.

② REINFORCING STEEL CONSISTS OF DEFORMED BARS CONFORMING TO AASHTO M31M, GRADE 420.

③ CONNECT EACH 3.05 m SECTION WITH CONNECTING PINS AS DETAILED AND CONFORMING TO AASHTO M270M, GRADE 250 OR BETTER. CONNECTING PINS NEED NOT BE PAINTED.

④ CUTOUTS ON ENDS OF EACH SECTION ARE SHOWN WITH SLIGHT TAPER TO FACILITATE FORM REMOVAL. RECTANGULAR CUTOUTS ARE ACCEPTABLE.

⑤ THE CONTRACTOR IS RESPONSIBLE FOR THE PROPER FIT-UP OF THE PRECAST CONCRETE BARRIER RAIL. ASSEMBLE AND PIN SUFFICIENT NUMBER OF PRECAST SECTIONS IN THE FABRICATIONS PLANT TO DETERMINE THAT PROPER FIT-UP CAN BE MAINTAINED ON ALL ROADWAY ALIGNMENT, CURVES AS WELL AS ON TANGENT. THIS IS TO BE DETERMINED EARLY IN FABRICATION.

⑥ ATTACH REFLECTORS TO RAIL EVERY 9.15 METERS. FOLLOW THE MANUFACTURER'S SPECIFICATIONS FOR ADHESIVE MOUNTING. IN NARROW PAVED (FLUSH) MEDIAN APPLICATIONS, REFLECTORIZE BOTH SIDES.

* 19 mm CHAMFER ENTIRE OPENING (OR SUFFICIENTLY ROUNDED SO THAT A SMOOTH EDGE RESULTS.) 13 mm CHAMFER IS ACCEPTABLE.

ALL DIMENSIONS ARE MILLIMETERS (mm) UNLESS OTHERWISE NOTED.

DETAILED DRAWING	
REFERENCE STANDARD SPEC. SECTION 554, 606	DWG. NO. 606-60
CONCRETE BARRIER RAIL	
EFFECTIVE: FEBRUARY 2005	

MDT serving you with pride — MONTANA DEPARTMENT OF TRANSPORTATION

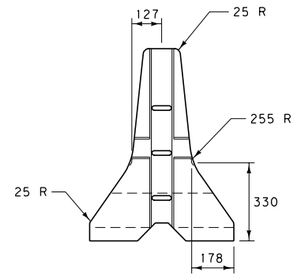

END VIEW

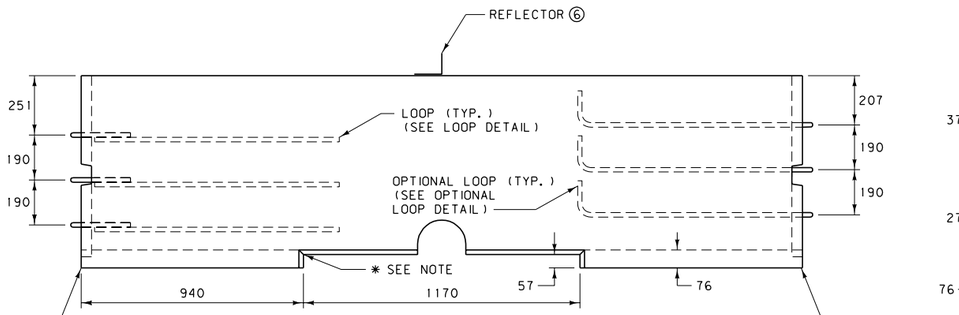

ELEVATION VIEW

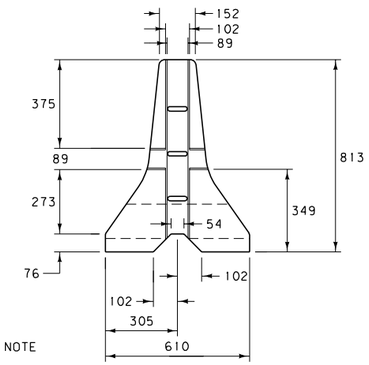

END VIEW

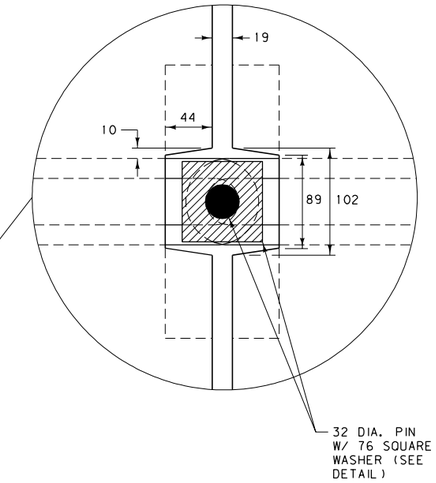

✱ SEE NOTE

✱ SEE NOTE

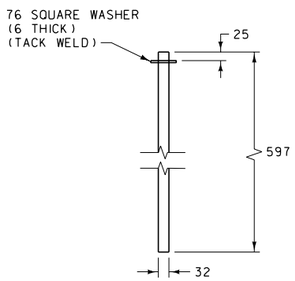

CONNECTING PIN DETAIL

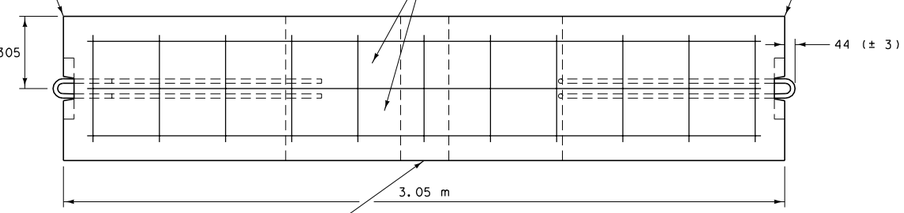

PLAN VIEW

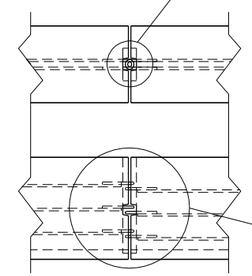

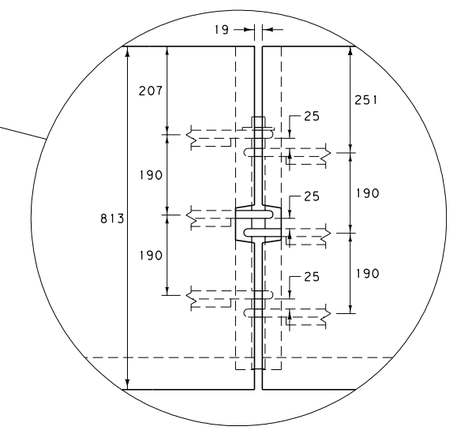

200 DIA. HOLE
FOR SPECIFIC SITES
SENSITIVE TO SMALL
ANIMAL CROSSINGS ✱✱

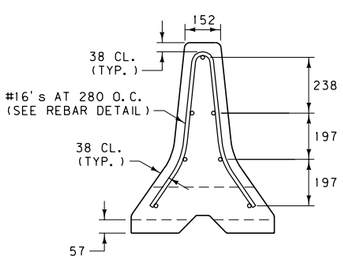

END VIEW

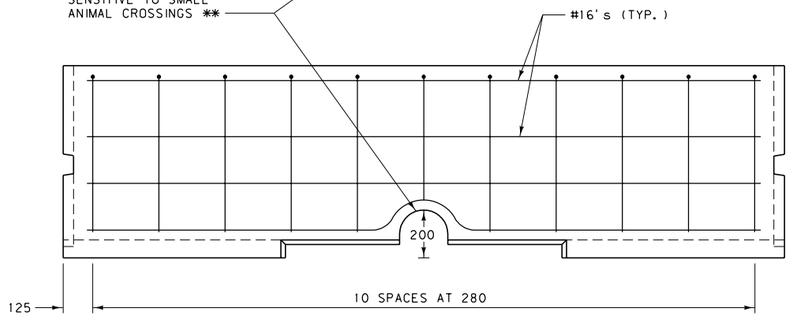

ELEVATION VIEW

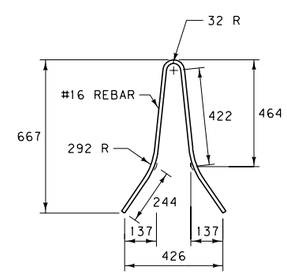

REBAR DETAIL

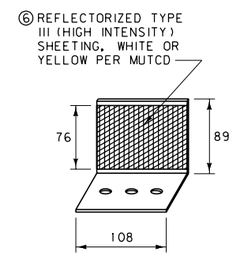

REFLECTOR
(SEE NOTES)

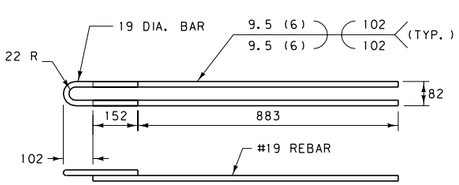

LOOP DETAIL

LOOP FABRICATION REQUIREMENTS:

1. USE REINFORCING STEEL CONFORMING TO ASTM A706M, GRADE 420 FOR REBAR BEING WELDED TO LOOPS.
2. LOOP ENDS CONSIST OF SMOOTH ROUND BARS CONFORMING TO AASHTO M270M, GRADE 250.
3. COLD BEND THE LOOPS BY USING A JIG THAT WILL PRODUCE AN ACCURATE RADIUS WITHOUT MARRING THE BAR. DO NOT HEAT THE BAR TO FACILITATE BENDING.
4. WELD REBAR TO LOOPS USING 3 mm DIA. E8018 ROD. DO NOT TACK WELD THE PIECES TOGETHER PRIOR TO WELDING.
5. USE A CERTIFIED WELDER IN ACCORDANCE WITH THE CURRENT EDITION OF AWS D1.4. DO NOT PLACE THE WELDED ASSEMBLY IN THE FORM UNTIL IT HAS BEEN INSPECTED.
6. NO ADDITIONAL WELDING IS PERMITTED ON THE SMOOTH ROUND BARS OR REINFORCING STEEL.

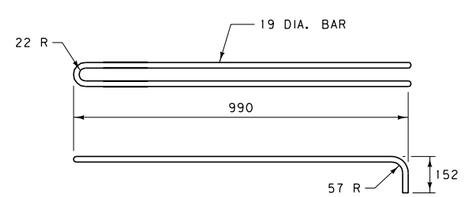

OPTIONAL LOOP DETAIL

OPTIONAL LOOP FABRICATION REQUIREMENTS:

1. USE CONTINUOUS SMOOTH ROUND BARS CONFORMING TO AASHTO M270M, GRADE 250 TO FABRICATE THE OPTIONAL LOOPS.
2. COLD BEND THE LOOPS BY USING A JIG THAT WILL PRODUCE AN ACCURATE RADIUS WITHOUT MARRING THE BAR. DO NOT HEAT THE BAR TO FACILITATE BENDING.
3. NO WELDING IS PERMITTED ON THE SMOOTH ROUND BARS OR REINFORCING STEEL.

NOTES:

① USE CLASS "DD" CONCRETE OR EQUIVALENT.

② REINFORCING STEEL CONSISTS OF DEFORMED BARS CONFORMING TO AASHTO M31M, GRADE 420.

③ CONNECT EACH 3.05 m SECTION WITH CONNECTING PINS AS DETAILED AND CONFORMING TO AASHTO M270M, GRADE 250 OR BETTER. CONNECTING PINS NEED NOT BE PAINTED.

④ CUTOUTS ON ENDS OF EACH SECTION ARE SHOWN WITH SLIGHT TAPER TO FACILITATE FORM REMOVAL. RECTANGULAR CUTOUTS ARE ACCEPTABLE.

⑤ THE CONTRACTOR IS RESPONSIBLE FOR THE PROPER FIT-UP OF THE PRECAST CONCRETE BARRIER RAIL. ASSEMBLE AND PIN SUFFICIENT NUMBER OF PRECAST SECTIONS IN THE FABRICATIONS PLANT TO DETERMINE THAT PROPER FIT-UP CAN BE MAINTAINED ON ALL ROADWAY ALIGNMENT, CURVES AS WELL AS ON TANGENT. THIS IS TO BE DETERMINED EARLY IN FABRICATION.

⑥ ATTACH REFLECTORS TO RAIL EVERY 9.15 METERS. FOLLOW THE MANUFACTURER'S SPECIFICATIONS FOR ADHESIVE MOUNTING. IN NARROW PAVED (FLUSH) MEDIAN APPLICATIONS, REFLECTORIZE BOTH SIDES.

✱ 19 mm CHAMFER ENTIRE OPENING (OR SUFFICIENTLY ROUNDED SO THAT A SMOOTH EDGE RESULTS.) 13 mm CHAMFER IS ACCEPTABLE.

✱✱ USE THIS RAIL ON A CASE-BY-CASE BASIS AS SPECIFIED IN THE PLANS.

ALL DIMENSIONS ARE MILLIMETERS (mm) UNLESS OTHERWISE NOTED.

DETAILED DRAWING	
REFERENCE STANDARD SPEC. SECTION 554.606	DWG. NO. 606-61
ALTERNATE CONCRETE BARRIER RAIL	
EFFECTIVE: FEBRUARY 2005	
serving you with pride	MONTANA DEPARTMENT OF TRANSPORTATION

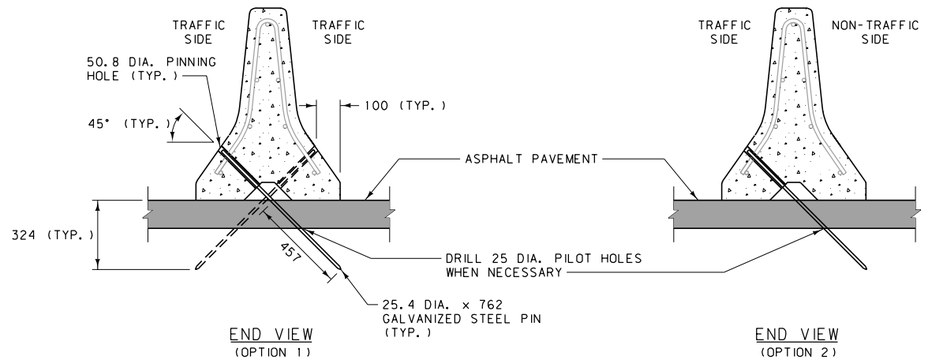

END VIEW (OPTION 1)

END VIEW (OPTION 2)

TYPE 1 ANCHOR
(FOR TEMPORARY OR PERMANENT CONCRETE BARRIER RAIL INSTALLATIONS ON ASPHALT PAVEMENT)

OPTION 1 = TRAFFIC ON BOTH SIDES OF C.B.R.
OPTION 2 = TRAFFIC ON ONE SIDE OF C.B.R.

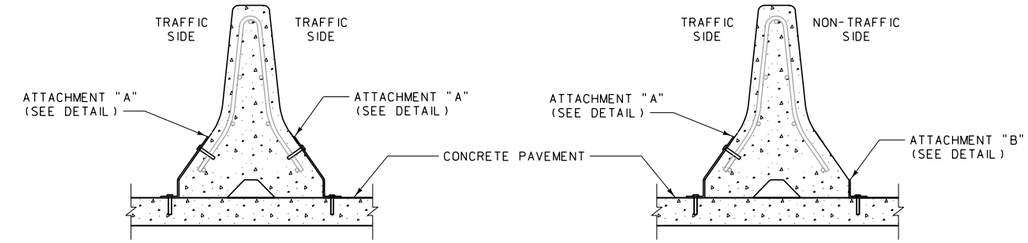

END VIEW (OPTION 1)

END VIEW (OPTION 2)

TYPE 2 & 3 ANCHORS
(FOR TEMPORARY CONCRETE BARRIER RAIL INSTALLATIONS ON CONCRETE PAVEMENT)

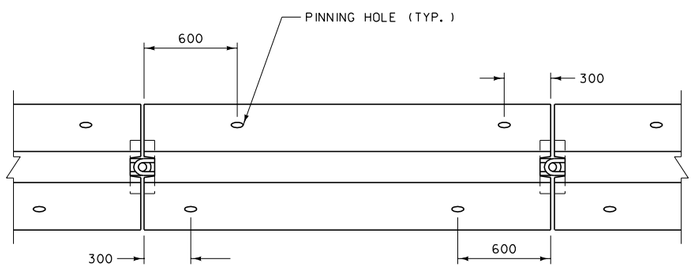

TYPE 1 ANCHOR
PLAN VIEW

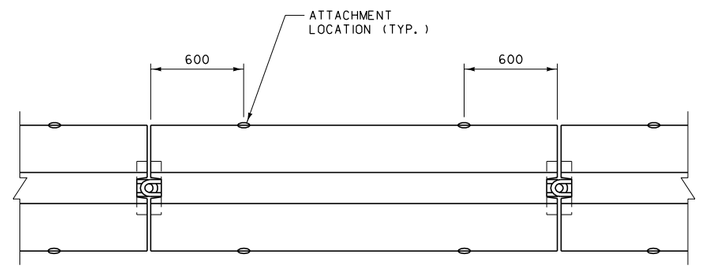

TYPE 2 ANCHOR
PLAN VIEW

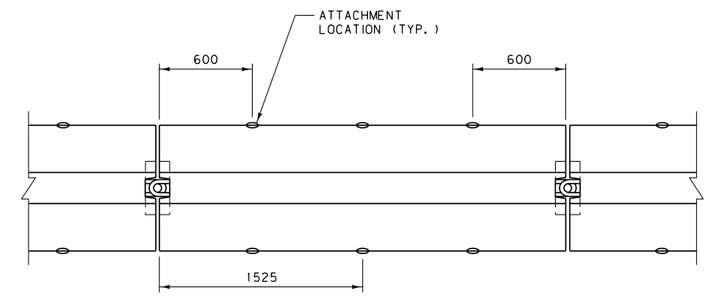

TYPE 3 ANCHOR
PLAN VIEW

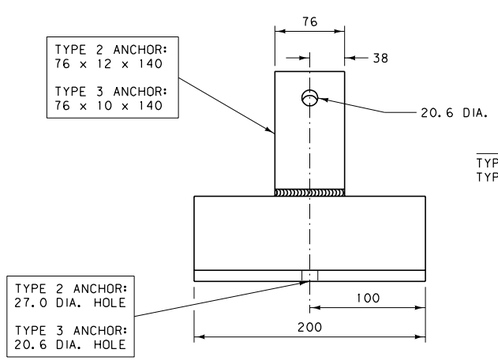

ATTACHMENT "A" DETAIL

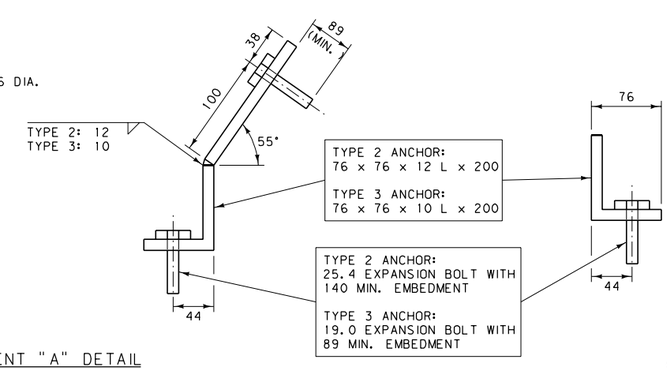

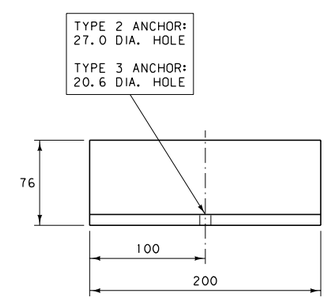

ATTACHMENT "B" DETAIL

NOTES:

1. USE THESE ANCHORS WITH STANDARD CONCRETE BARRIER RAIL (C.B.R.), AS SHOWN IN DTL. DWG. NO. 606-60, WHEN DEFLECTION OF THE SYSTEM NEEDS TO BE LIMITED.
2. CAST THE PINNING HOLES INTO THE C.B.R USING 50.8 I.D. STEEL PIPE. DO NOT DRILL THE PINNING HOLES.
3. USE STEEL CONFORMING TO AASHTO M270M, GRADE 250 OR BETTER FOR PINS AND ATTACHMENT ANGLES. GALVANIZE IN ACCORDANCE WITH AASHTO M111M.
4. USE TYPE 2 ANCHORS WHEN A DEEPER EMBEDMENT (140 mm) INTO THE BRIDGE DECK OR CONCRETE PAVEMENT IS PERMISSIBLE.
5. ADJUST THE LOCATION OF THE TYPE 2 OR TYPE 3 ANCHORS TO AVOID THE MAIN REINFORCING WHEN PLACED ON BRIDGE DECKS.
6. USE SHIMS TO PROPERLY FIT THE TYPE 2 OR TYPE 3 ANCHORS TO THE BARRIER AND ROADWAY SURFACES.
7. AFTER REMOVING TYPE 2 OR TYPE 3 ANCHORS, CLEAN THE HOLES IN THE CONCRETE PAVEMENT AND FILL WITH AN APPROVED NON-SHRINK OR EPOXY GROUT.
8. REMOVE TYPE 1 ANCHORS BY FIRST DRIVING THE STEEL PINS DOWN THROUGH THE BARRIER TO ALLOW LIFTING OF THE BARRIER WITHOUT INTERFERENCE. THEN REMOVE THE PINS FROM THE PAVEMENT AND FILL THE PINNING HOLES WITH AN APPROVED SEALANT.

ALL DIMENSIONS ARE MILLIMETERS (mm) UNLESS OTHERWISE NOTED.

DETAILED DRAWING

REFERENCE STANDARD SPEC. SECTION 554.606	DWG. NO. 606-62

CONCRETE BARRIER RAIL ANCHORS

EFFECTIVE: FEBRUARY 2005

MDT serving you with pride — MONTANA DEPARTMENT OF TRANSPORTATION

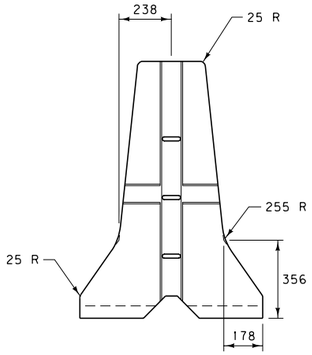

END VIEW

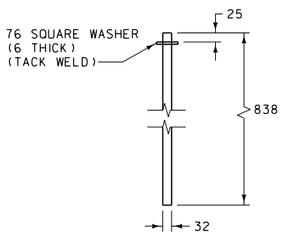

CONNECTING PIN DETAIL

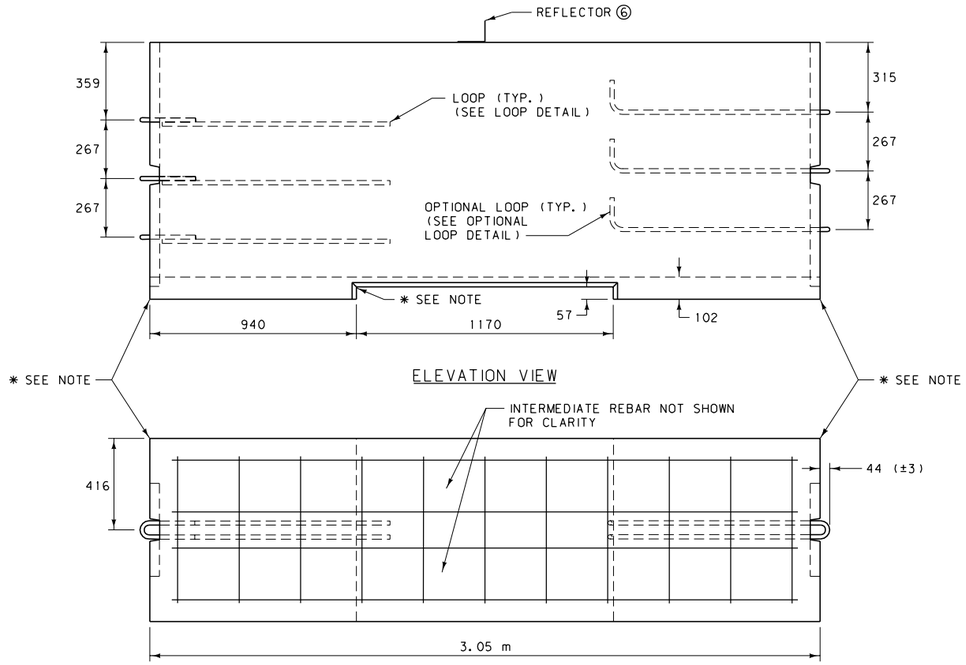

ELEVATION VIEW

PLAN VIEW

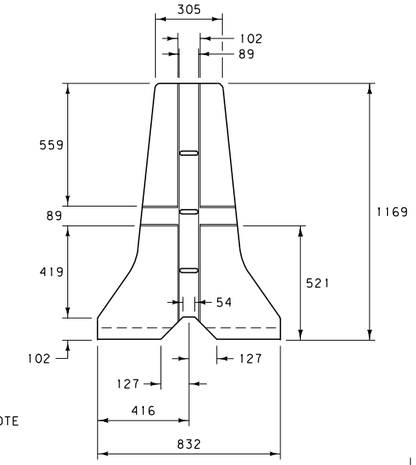

END VIEW

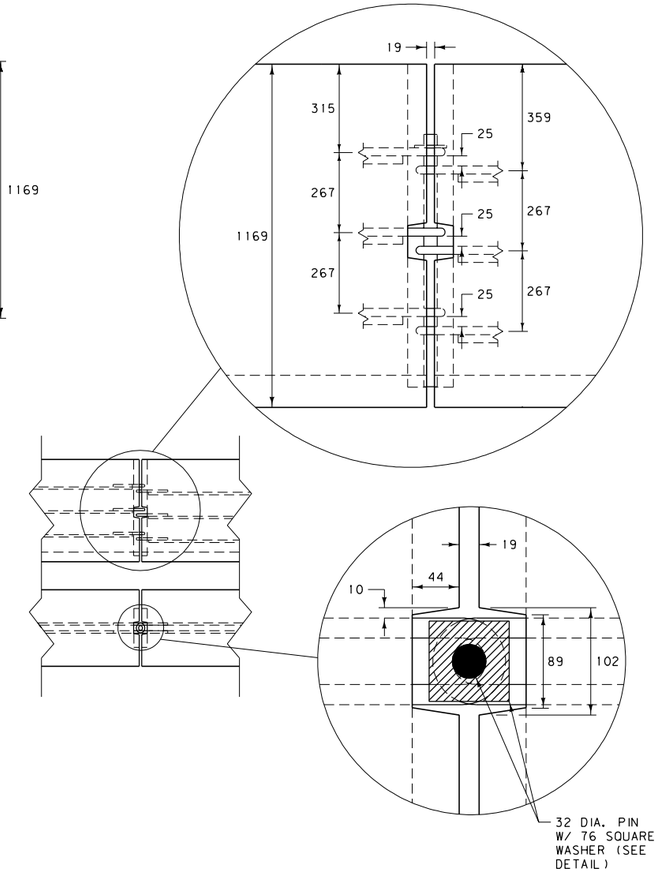

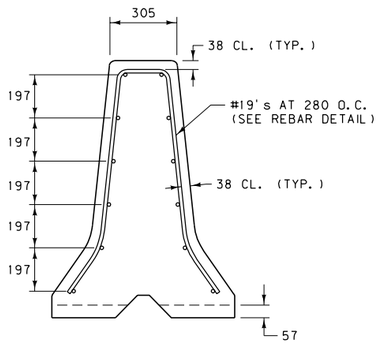

END VIEW

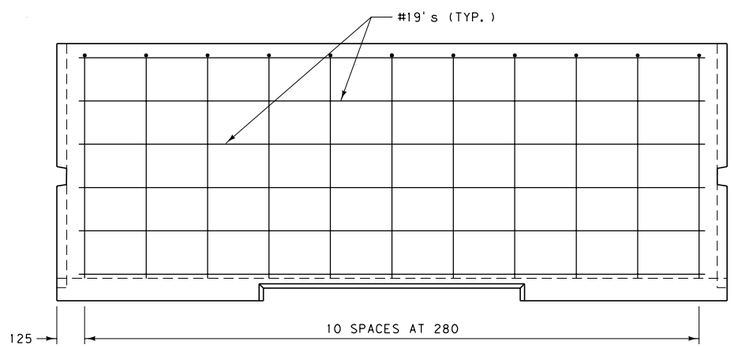

ELEVATION VIEW

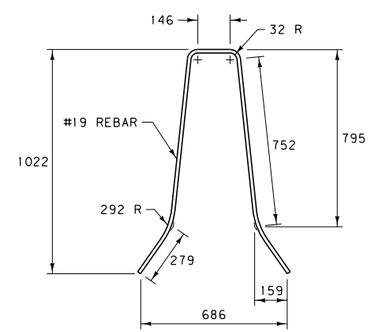

REBAR DETAIL

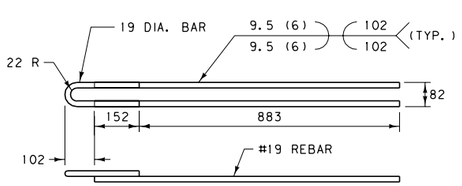

LOOP DETAIL

LOOP FABRICATION REQUIREMENTS:

1. USE REINFORCING STEEL CONFORMING TO ASTM A706M, GRADE 420 FOR REBAR BEING WELDED TO LOOPS.
2. LOOP ENDS CONSIST OF SMOOTH ROUND BARS CONFORMING TO AASHTO M270M, GRADE 250.
3. COLD BEND THE LOOPS BY USING A JIG THAT WILL PRODUCE AN ACCURATE RADIUS WITHOUT MARRING THE BAR. DO NOT HEAT THE BAR TO FACILITATE BENDING.
4. WELD REBAR TO LOOPS USING 3 mm DIA. E8018 ROD. DO NOT TACK WELD THE PIECES TOGETHER PRIOR TO WELDING.
5. USE A CERTIFIED WELDER IN ACCORDANCE WITH THE CURRENT EDITION OF AWS D1.4. DO NOT PLACE THE WELDED ASSEMBLY IN THE FORM UNTIL IT HAS BEEN INSPECTED.
6. NO ADDITIONAL WELDING IS PERMITTED ON THE SMOOTH ROUND BARS OR REINFORCING STEEL.

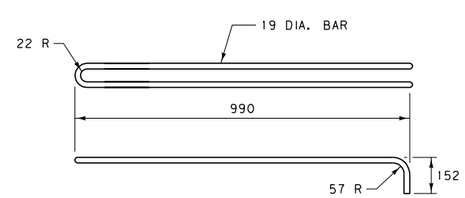

OPTIONAL LOOP DETAIL

OPTIONAL LOOP FABRICATION REQUIREMENTS:

1. USE CONTINUOUS SMOOTH ROUND BARS CONFORMING TO AASHTO M270M, GRADE 250 TO FABRICATE THE OPTIONAL LOOPS.
2. COLD BEND THE LOOPS BY USING A JIG THAT WILL PRODUCE AN ACCURATE RADIUS WITHOUT MARRING THE BAR. DO NOT HEAT THE BAR TO FACILITATE BENDING.
3. NO WELDING IS PERMITTED ON THE SMOOTH ROUND BARS OR REINFORCING STEEL.

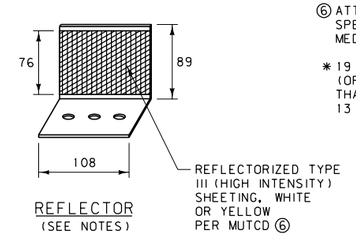

REFLECTOR
(SEE NOTES)

NOTES:

① USE CLASS "DD" CONCRETE OR EQUIVALENT.

② REINFORCING STEEL CONSISTS OF DEFORMED BARS CONFORMING TO AASHTO M31M, GRADE 420.

③ CONNECT EACH 3.05 m SECTION WITH CONNECTING PINS AS DETAILED AND CONFORMING TO AASHTO M270M, GRADE 250 OR BETTER. CONNECTING PINS NEED NOT BE PAINTED.

④ CUTOUTS ON ENDS OF EACH SECTION ARE SHOWN WITH SLIGHT TAPER TO FACILITATE FORM REMOVAL. RECTANGULAR CUTOUTS ARE ACCEPTABLE.

⑤ THE CONTRACTOR IS RESPONSIBLE FOR THE PROPER FIT-UP OF THE PRECAST CONCRETE BARRIER RAIL. ASSEMBLE AND PIN SUFFICIENT NUMBER OF PRECAST SECTIONS IN THE FABRICATIONS PLANT TO DETERMINE THAT PROPER FIT-UP CAN BE MAINTAINED ON ALL ROADWAY ALIGNMENT, CURVES AS WELL AS ON TANGENT. THIS IS TO BE DETERMINED EARLY IN FABRICATION.

⑥ ATTACH REFLECTORS TO RAIL EVERY 9.15 m. FOLLOW THE MANUFACTURER'S SPECIFICATIONS FOR ADHESIVE MOUNTING. IN NARROW PAVED (FLUSH) MEDIAN APPLICATIONS, REFLECTORIZE BOTH SIDES.

✱ 19 mm CHAMFER ENTIRE OPENING (OR SUFFICIENTLY ROUNDED SO THAT A SMOOTH EDGE RESULTS.) 13 mm CHAMFER IS ACCEPTABLE.

ALL DIMENSIONS ARE MILLIMETERS (mm) UNLESS OTHERWISE NOTED.

DETAILED DRAWING	
REFERENCE STANDARD SPEC. SECTION 554.606	DWG. NO. 606-64
TALL CONCRETE BARRIER RAIL	
EFFECTIVE: FEBRUARY 2005	
serving you with pride	MONTANA DEPARTMENT OF TRANSPORTATION

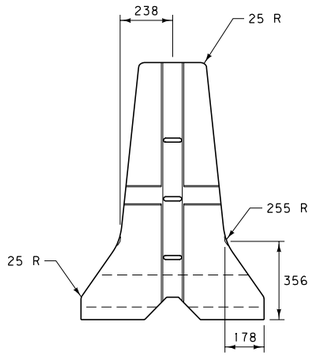

END VIEW

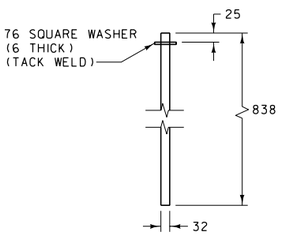

CONNECTING PIN DETAIL

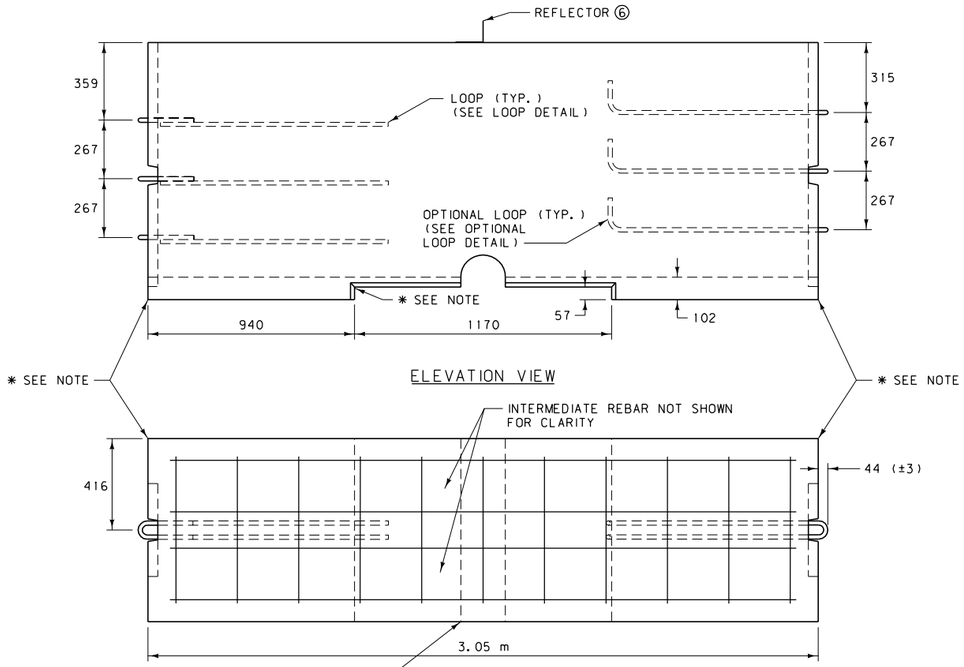

ELEVATION VIEW

PLAN VIEW

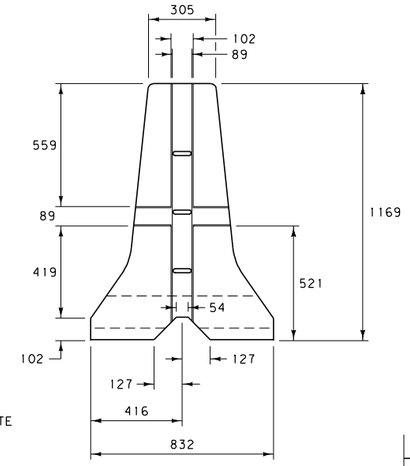

END VIEW

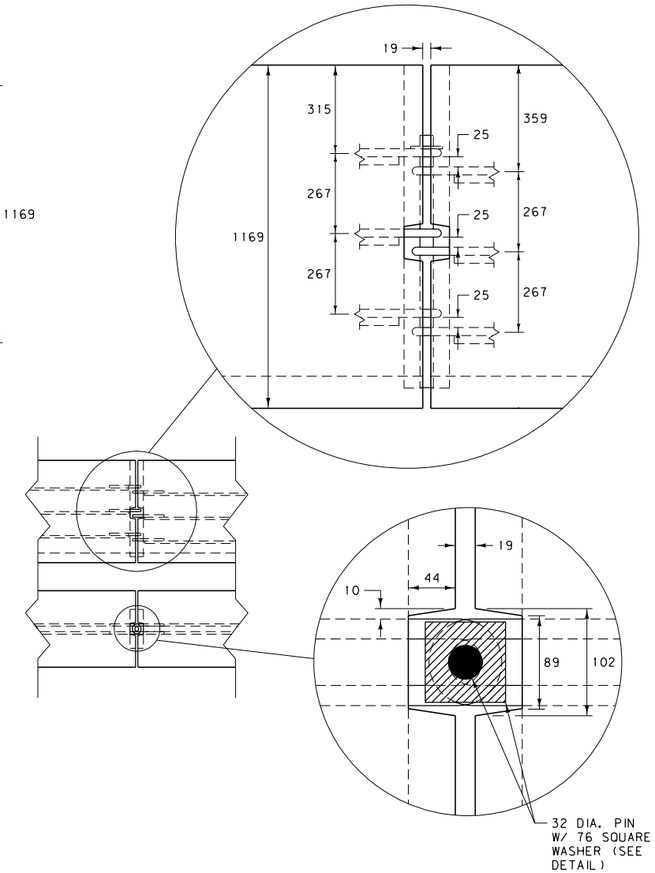

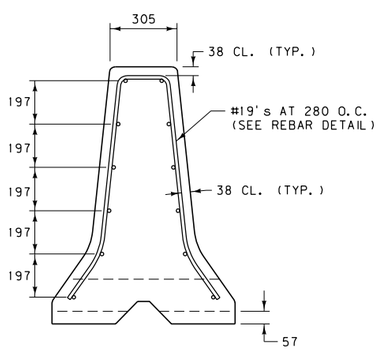

END VIEW

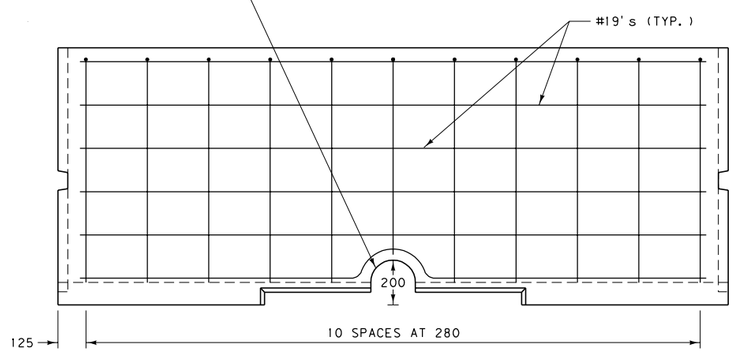

ELEVATION VIEW

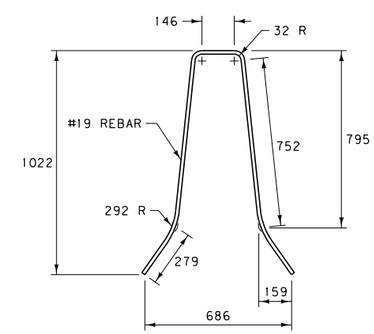

REBAR DETAIL

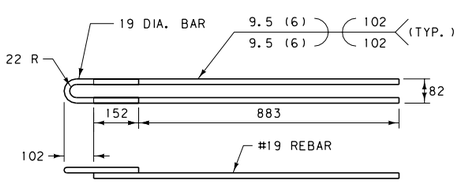

LOOP DETAIL

LOOP FABRICATION REQUIREMENTS:

1. USE REINFORCING STEEL CONFORMING TO ASTM A706M, GRADE 420 FOR REBAR BEING WELDED TO LOOPS.
2. LOOP ENDS CONSIST OF SMOOTH ROUND BARS CONFORMING TO AASHTO M270M, GRADE 250.
3. COLD BEND THE LOOPS BY USING A JIG THAT WILL PRODUCE AN ACCURATE RADIUS WITHOUT MARRING THE BAR. DO NOT HEAT THE BAR TO FACILITATE BENDING.
4. WELD REBAR TO LOOPS USING 3 mm DIA. E8018 ROD. DO NOT TACK WELD THE PIECES TOGETHER PRIOR TO WELDING.
5. USE A CERTIFIED WELDER IN ACCORDANCE WITH THE CURRENT EDITION OF AWS D1.4. DO NOT PLACE THE WELDED ASSEMBLY IN THE FORM UNTIL IT HAS BEEN INSPECTED.
6. NO ADDITIONAL WELDING IS PERMITTED ON THE SMOOTH ROUND BARS OR REINFORCING STEEL.

OPTIONAL LOOP DETAIL

OPTIONAL LOOP FABRICATION REQUIREMENTS:

1. USE CONTINUOUS SMOOTH ROUND BARS CONFORMING TO AASHTO M270M, GRADE 250 TO FABRICATE THE OPTIONAL LOOPS.
2. COLD BEND THE LOOPS BY USING A JIG THAT WILL PRODUCE AN ACCURATE RADIUS WITHOUT MARRING THE BAR. DO NOT HEAT THE BAR TO FACILITATE BENDING.
3. NO WELDING IS PERMITTED ON THE SMOOTH ROUND BARS OR REINFORCING STEEL.

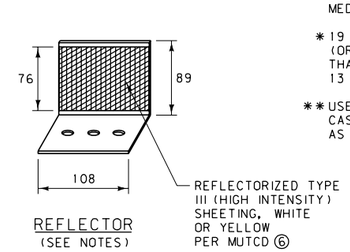

REFLECTOR
(SEE NOTES)

NOTES:

① USE CLASS "DD" CONCRETE OR EQUIVALENT.

② REINFORCING STEEL CONSISTS OF DEFORMED BARS CONFORMING TO AASHTO M31M, GRADE 420.

③ CONNECT EACH 3.05 m SECTION WITH CONNECTING PINS AS DETAILED AND CONFORMING TO AASHTO M270M, GRADE 250 OR BETTER. CONNECTING PINS NEED NOT BE PAINTED.

④ CUTOUTS ON ENDS OF EACH SECTION ARE SHOWN WITH SLIGHT TAPER TO FACILITATE FORM REMOVAL. RECTANGULAR CUTOUTS ARE ACCEPTABLE.

⑤ THE CONTRACTOR IS RESPONSIBLE FOR THE PROPER FIT-UP OF THE PRECAST CONCRETE BARRIER RAIL. ASSEMBLE AND PIN SUFFICIENT NUMBER OF PRECAST SECTIONS IN THE FABRICATIONS PLANT TO DETERMINE THAT PROPER FIT-UP CAN BE MAINTAINED ON ALL ROADWAY ALIGNMENT, CURVES AS WELL AS ON TANGENT. THIS IS TO BE DETERMINED EARLY IN FABRICATION.

⑥ ATTACH REFLECTORS TO RAIL EVERY 9.15 m. FOLLOW THE MANUFACTURER'S SPECIFICATIONS FOR ADHESIVE MOUNTING. IN NARROW PAVED (FLUSH) MEDIAN APPLICATIONS, REFLECTORIZE BOTH SIDES.

* 19 mm CHAMFER ENTIRE OPENING (OR SUFFICIENTLY ROUNDED SO THAT A SMOOTH EDGE RESULTS.) 13 mm CHAMFER IS ACCEPTABLE.

** USE THIS RAIL ON A CASE BY CASE BASIS AS SPECIFIED IN PLANS.

ALL DIMENSIONS ARE MILLIMETERS (mm) UNLESS OTHERWISE NOTED.

DETAILED DRAWING	
REFERENCE STANDARD SPEC. SECTION 554.606	DWG. NO. 606-65
ALTERNATE TALL CONCRETE BARRIER RAIL	
EFFECTIVE: FEBRUARY 2005	

MDT serving you with pride — MONTANA DEPARTMENT OF TRANSPORTATION

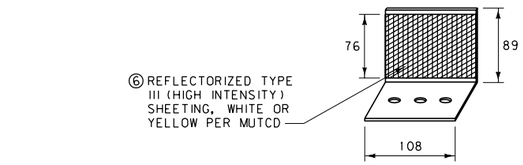

REFLECTOR
(SEE NOTES)

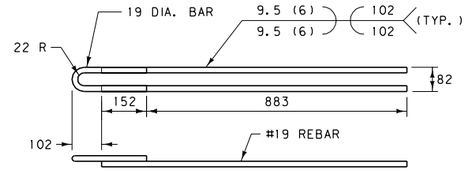

LOOP DETAIL

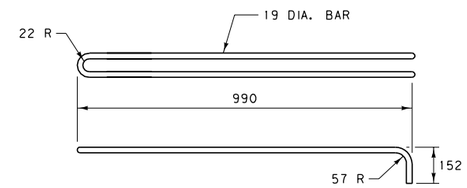

OPTIONAL LOOP DETAIL

LOOP FABRICATION REQUIREMENTS:

1. USE REINFORCING STEEL CONFORMING TO ASTM A706M, GRADE 420 FOR REBAR BEING WELDED TO LOOPS.
2. LOOP ENDS CONSIST OF SMOOTH ROUND BARS CONFORMING TO AASHTO M270M, GRADE 250.
3. COLD BEND THE LOOPS BY USING A JIG THAT WILL PRODUCE AN ACCURATE RADIUS WITHOUT MARRING THE BAR. DO NOT HEAT THE BAR TO FACILITATE BENDING.
4. WELD REBAR TO LOOPS USING 3 mm DIA. E8018 ROD. DO NOT TACK WELD THE PIECES TOGETHER PRIOR TO WELDING.
5. USE A CERTIFIED WELDER IN ACCORDANCE WITH THE CURRENT EDITION OF AWS D1.4. DO NOT PLACE THE WELDED ASSEMBLY IN THE FORM UNTIL IT HAS BEEN INSPECTED.
6. NO ADDITIONAL WELDING IS PERMITTED ON THE SMOOTH ROUND BARS OR REINFORCING STEEL.

OPTIONAL LOOP FABRICATION REQUIREMENTS:

1. USE CONTINUOUS SMOOTH ROUND BARS CONFORMING TO AASHTO M270M, GRADE 250 TO FABRICATE THE OPTIONAL LOOPS.
2. COLD BEND THE LOOPS BY USING A JIG THAT WILL PRODUCE AN ACCURATE RADIUS WITHOUT MARRING THE BAR. DO NOT HEAT THE BAR TO FACILITATE BENDING.
3. NO WELDING IS PERMITTED ON THE SMOOTH ROUND BARS OR REINFORCING STEEL.

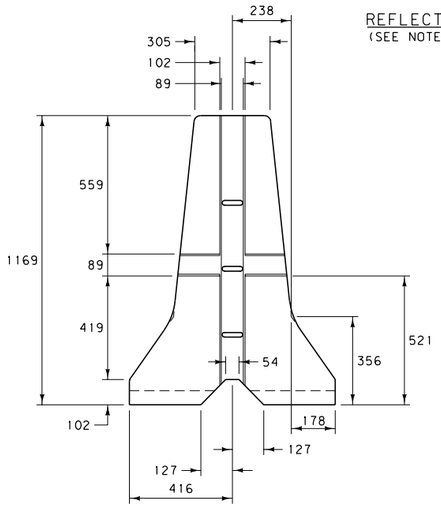

LEFT END VIEW

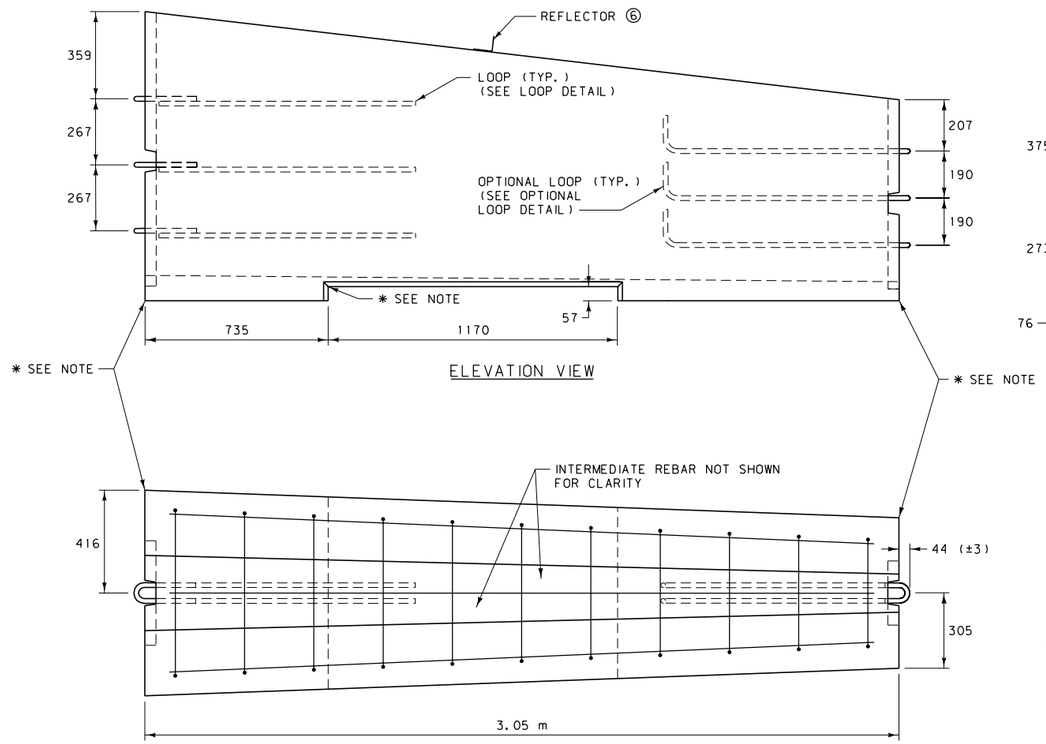

ELEVATION VIEW

PLAN VIEW

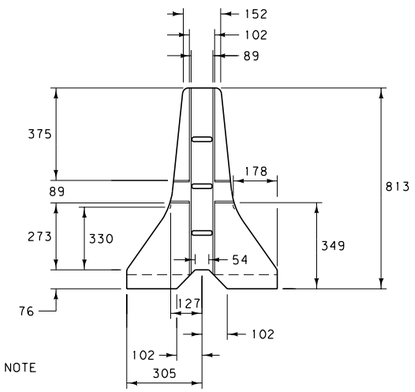

RIGHT END VIEW

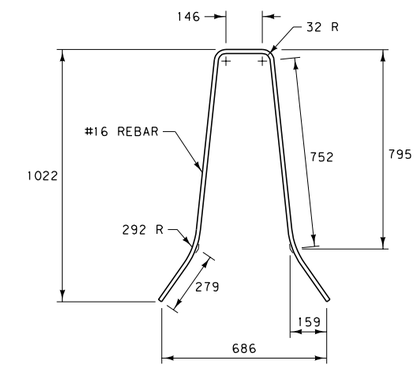

REBAR DETAIL LEFT END

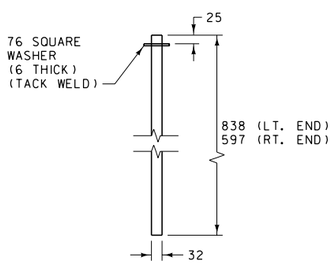

CONNECTING PIN DETAIL

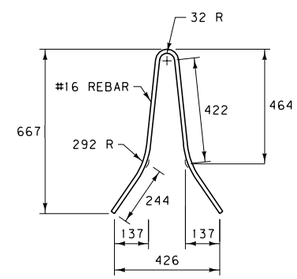

REBAR DETAIL RIGHT END

NOTE:

LEFT AND RIGHT REBAR DETAILS ARE FOR NORMAL TALL AND REGULAR CONCRETE BARRIER RAIL SECTIONS. TAPER REBAR HEIGHT AND WIDTH AS NEEDED BY MAINTAINING THE VERTICAL POSITION FROM THE BOTTOM AND THE 38 mm CLEARANCE AT ALL LOCATIONS.

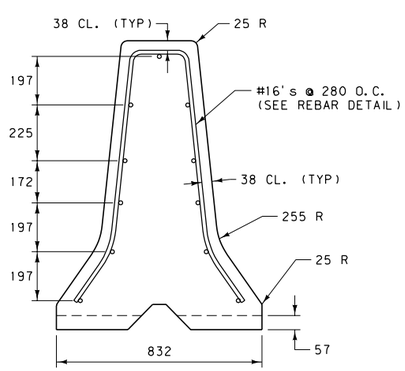

LEFT END VIEW

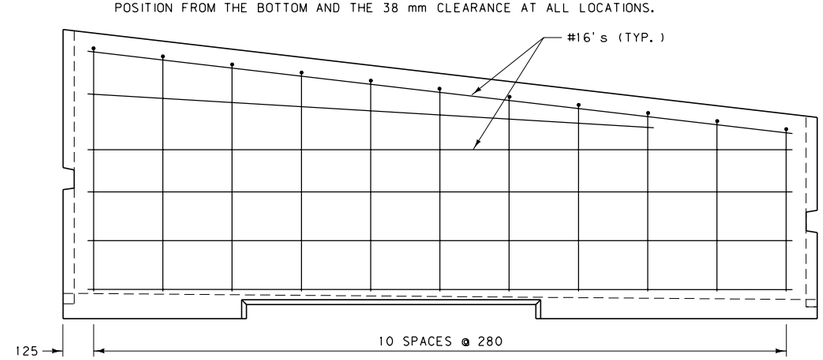

ELEVATION VIEW

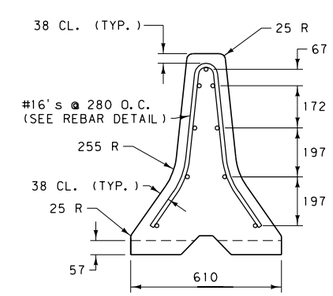

RIGHT END VIEW

NOTES:

① USE CLASS "DD" CONCRETE OR EQUIVALENT.

② REINFORCING STEEL CONSISTS OF DEFORMED BARS CONFORMING TO AASHTO M31M, GRADE 420.

③ CONNECT EACH 3.05 m SECTION WITH CONNECTING PINS AS DETAILED AND CONFORMING TO AASHTO M270M, GRADE 250 OR BETTER. CONNECTING PINS NEED NOT BE PAINTED.

④ CUTOUTS ON ENDS OF EACH SECTION ARE SHOWN WITH SLIGHT TAPER TO FACILITATE FORM REMOVAL. RECTANGULAR CUTOUTS ARE ACCEPTABLE.

⑤ THE CONTRACTOR IS RESPONSIBLE FOR THE PROPER FIT-UP OF THE PRECAST CONCRETE BARRIER RAIL. ASSEMBLE AND PIN SUFFICIENT NUMBER OF PRECAST SECTIONS IN THE FABRICATIONS PLANT TO DETERMINE THAT PROPER FIT-UP CAN BE MAINTAINED ON ALL ROADWAY ALIGNMENT, CURVES AS WELL AS ON TANGENT. THIS IS TO BE DETERMINED EARLY IN FABRICATION.

⑥ ATTACH REFLECTORS TO RAIL EVERY 9.15 m. FOLLOW THE MANUFACTURER'S SPECIFICATIONS FOR ADHESIVE MOUNTING. IN NARROW PAVED (FLUSH) MEDIAN APPLICATIONS, REFLECTORIZE BOTH SIDES.

⑦ SEE DETAILED DRAWINGS 606-60 AND 606-64 FOR INFORMATION ON THE ADJACENT CONCRETE BARRIER RAIL SECTIONS.

✱ 19 mm CHAMFER ENTIRE OPENING (OR SUFFICIENTLY ROUNDED SO THAT A SMOOTH EDGE RESULTS.) 13 mm CHAMFER IS ACCEPTABLE.

ALL DIMENSIONS ARE MILLIMETERS (mm) UNLESS OTHERWISE NOTED.

DETAILED DRAWING	
REFERENCE STANDARD SPEC. SECTION 544, 606	DWG. NO. 606-66
CONCRETE BARRIER RAIL TRANSITION	
EFFECTIVE: FEBRUARY 2005	
serving you with pride	MONTANA DEPARTMENT OF TRANSPORTATION

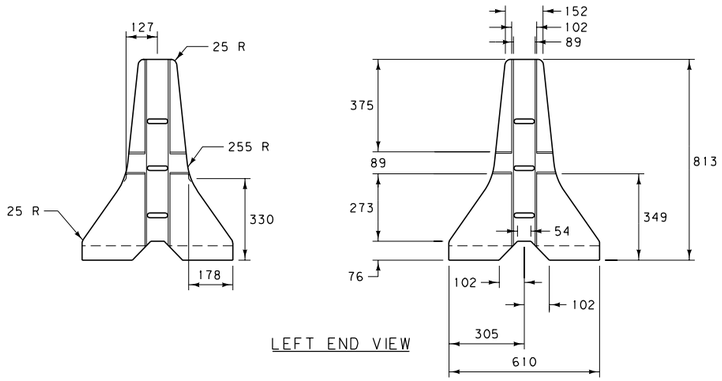

LEFT END VIEW

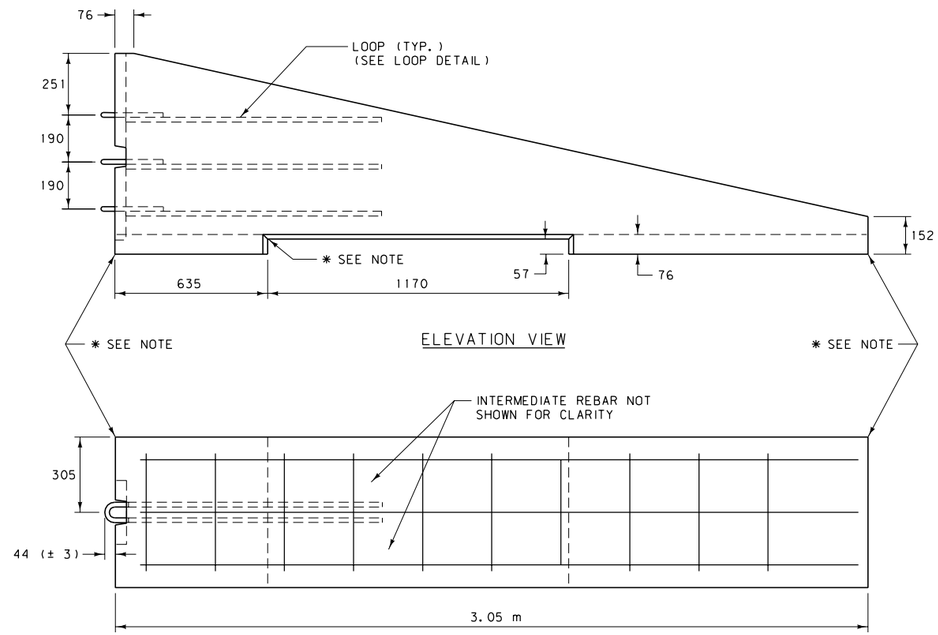

ELEVATION VIEW

PLAN VIEW

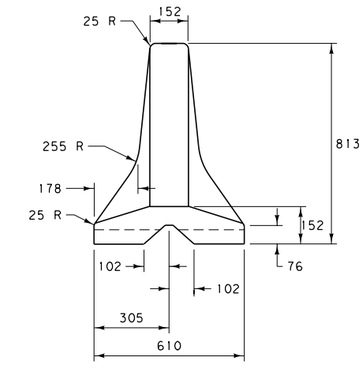

RIGHT END VIEW

NOTE:

REBAR TYPICAL AT LEFT END ONLY. TAPER THE REBAR HEIGHT AS NEEDED, BY MAINTAINING THE VERTICAL POSITION FROM THE BOTTOM AND THE 38 mm CLEARANCE AT ALL LOCATIONS.

NOTES:

1. USE CLASS "DD" CONCRETE OR EQUIVALENT.
2. REINFORCING STEEL CONSISTS OF DEFORMED BARS CONFORMING TO AASHTO M31M, GRADE 420.
3. CONNECT EACH 3.05 m SECTION WITH CONNECTING PINS AS DETAILED AND CONFORMING TO AASHTO M270M, GRADE 250 OR BETTER. CONNECTING PINS NEED NOT BE PAINTED.
4. CUTOUTS ON LEFT END OF EACH SECTION ARE SHOWN WITH SLIGHT TAPER TO FACILITATE FORM REMOVAL. RECTANGULAR CUTOUTS ARE ACCEPTABLE.
5. THE CONTRACTOR IS RESPONSIBLE FOR THE PROPER FIT-UP OF THE PRECAST CONCRETE BARRIER RAIL. ASSEMBLE AND PIN SUFFICIENT NUMBER OF PRECAST SECTIONS IN THE FABRICATIONS PLANT TO DETERMINE THAT PROPER FIT-UP CAN BE MAINTAINED ON ALL ROADWAY ALIGNMENT, CURVES AS WELL AS ON TANGENT. THIS IS TO BE DETERMINED EARLY IN FABRICATION.
6. SEE DTL. DWG. NO. 606-60 FOR INFORMATION ON THE ADJACENT CONCRETE BARRIER RAIL SECTION.

* 19 mm CHAMFER ENTIRE OPENING (OR SUFFICIENTLY ROUNDED SO THAT A SMOOTH EDGE RESULTS.) 13 mm CHAMFER IS ACCEPTABLE.

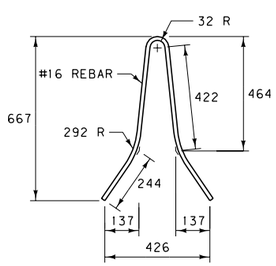

REBAR DETAIL LEFT END

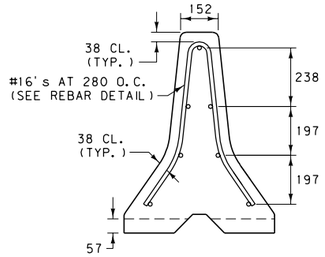

LEFT END VIEW

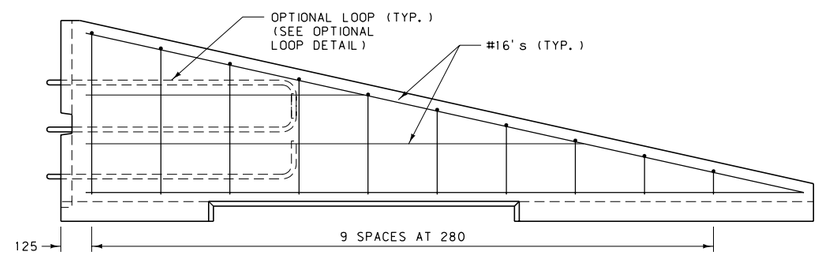

ELEVATION VIEW

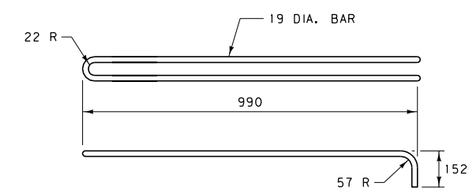

OPTIONAL LOOP DETAIL

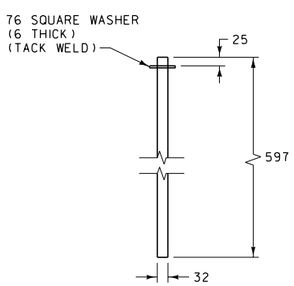

CONNECTING PIN DETAIL

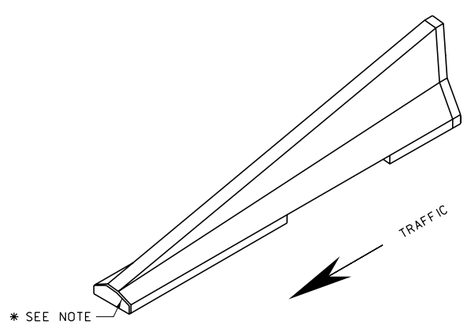

ISOMETRIC VIEW

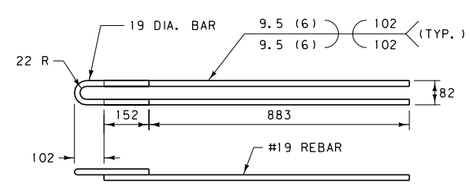

LOOP DETAIL

LOOP FABRICATION REQUIREMENTS:

1. USE REINFORCING STEEL CONFORMING TO ASTM A706M, GRADE 420 FOR REBAR BEING WELDED TO LOOPS.
2. LOOP ENDS CONSIST OF SMOOTH ROUND BARS CONFORMING TO AASHTO M270M, GRADE 250.
3. COLD BEND THE LOOPS BY USING A JIG THAT WILL PRODUCE AN ACCURATE RADIUS WITHOUT MARRING THE BAR. DO NOT HEAT THE BAR TO FACILITATE BENDING.
4. WELD REBAR TO LOOPS USING 3 mm DIA. E8018 ROD. DO NOT TACK WELD THE PIECES TOGETHER PRIOR TO WELDING.
5. USE A CERTIFIED WELDER IN ACCORDANCE WITH THE CURRENT EDITION OF AWS D1.4. DO NOT PLACE THE WELDED ASSEMBLY IN THE FORM UNTIL IT HAS BEEN INSPECTED.
6. NO ADDITIONAL WELDING IS PERMITTED ON THE SMOOTH ROUND BARS OR REINFORCING STEEL.

OPTIONAL LOOP FABRICATION REQUIREMENTS:

1. USE CONTINUOUS SMOOTH ROUND BARS CONFORMING TO AASHTO M270M, GRADE 250 TO FABRICATE THE OPTIONAL LOOPS.
2. COLD BEND THE LOOPS BY USING A JIG THAT WILL PRODUCE AN ACCURATE RADIUS WITHOUT MARRING THE BAR. DO NOT HEAT THE BAR TO FACILITATE BENDING.
3. NO WELDING IS PERMITTED ON THE SMOOTH ROUND BARS OR REINFORCING STEEL.

ALL DIMENSIONS ARE MILLIMETERS (mm) UNLESS OTHERWISE NOTED.

DETAILED DRAWING	
REFERENCE STANDARD SPEC. SECTION 554.606	DWG. NO. 606-68
CONCRETE BARRIER RAIL TERMINAL SECTION (ONE-WAY DEPARTURE)	
EFFECTIVE: FEBRUARY 2005	
serving you with pride	MONTANA DEPARTMENT OF TRANSPORTATION

SCHEDULE OF GUARDRAIL HARDWARE

DESIGNATION ①	DESCRIPTION	DTL. DWG. NO. (606-###)	GUARDRAIL TYPE ②
FBB01-05	M16 GUARDRAIL BOLT AND RECESS NUT	82	W
FBH01	M8 HOOK BOLT	92	C
FBH02	M8 ALTERNATE HOOK BOLT	92	C
FBX10a	M10 HEX BOLT	82	B
FBX12a	M12 HEX BOLT	82	B, C
FBX14a	M14 HEX BOLT	82	B
FBX16a	M16 HEX BOLT	82	W
FBX20a	M20 HEX BOLT	82	W
FBX20b	M20 HIGH STRENGTH HEX BOLT	82	B
FCA01	CABLE ASSEMBLY	84	W
FMM01	CABLE WEDGE	94	C
FMM02	POST SLEEVE	84	W
FNS20	M20 SQUARE NUT	82	C
FNX08a	M8 HEX NUT	82	C
FNX10a	M10 HEX NUT	82	B
FNX12a	M12 HEX NUT	82	B, C
FNX14a	M14 HEX NUT	82	B
FNX16a	M16 HEX NUT	82	W
FNX20a	M20 HEX NUT	82	C, W
FNX20b	M20 HIGH STRENGTH HEX NUT	82	B
FNX24a	M24 HEX NUT	82	W
FPA01	GUARDRAIL ANCHOR BRACKET & END PLATE	84	W
FPA02	CABLE ANCHOR BRACKET	95	C
FPB01	BEARING PLATE	18 & 46	W
FPP01	BOX BEAM SUPPORT BRACKET	97	B
FRH20a	M20 HOOKED ANCHOR ROD	82	C
FWC10a	M10 FLAT WASHER	82	B
FWC12a	M12 FLAT WASHER	82	B, C
FWC14a	M14 FLAT WASHER	82	B
FWC16a	M16 FLAT WASHER	82	W
FWC20a	M20 FLAT WASHER	82	C, W
FWC20b	M20 HARDENED FLAT WASHER	82	B
FWC24a	M24 FLAT WASHER	82	W
FWR03	RECTANGULAR PLATE WASHER	84	W
PDB01	WOOD BLOCKOUT	05A & 05B	W
PDE02	WOOD GUARDRAIL POST	05A	W
PDE09	CRT POST	46	W
PDF01	WOOD BREAKAWAY POST	46	W
PDF03	END POST	18	W
PLS01	SOIL PLATE	92 & 97	B, C
PLS03	SOIL PLATE	46	W
PSE01	CABLE GUARDRAIL LINE POST	92	C
PSE05	TYPE D BOX BEAM POST	97	B
PSE06	CABLE GUARDRAIL ANCHOR POST	95	C
PSE08	TYPE A BOX BEAM POST	97	B
PTE05	STEEL TUBE	46	W
PWE01	STEEL GUARDRAIL POST	05B	W
RBM01	BOX BEAM RAIL	98	B
RBM05	BOX BEAM TERMINAL RAIL	98	B
RBS01	BOX BEAM SPLICE PLATE	98	B
RCE01	COMPENSATING CABLE END ASSEMBLY	94	C
RCE03	CABLE END ASSEMBLY	94	C
RCM01	19.1 DIA. CABLE	94	C
RWE01a-b	W-BEAM END SECTION (FLARED)	88	W
RWE02a-b	W-BEAM TERMINAL CONNECTOR	88	W
RWE06a-b	W-BEAM END SECTION (BUFFER)	88	W
RWM02a-b	W-BEAM (3.81 m LENGTH)	88	W
RWM22a-b	W-BEAM (7.62 m LENGTH)	88	W
SEC01	CABLE GUARDRAIL TERMINAL ANCHOR ASSEMBLY	41	C

SCHEDULE OF GUARDRAIL HARDWARE

DESIGNATION ①	DESCRIPTION	DTL. DWG. NO. (606-###)	GUARDRAIL TYPE ②
N/A	TURNBUCKLE CABLE END ASSEMBLY	94	C
N/A	KEEPER PLATE	95	C
N/A	TYPE B BOX BEAM POST	97	B
N/A	TS152 x 152 x 4.8 BR. APP. SECT. UPPER RAIL NO. 1	98	B
N/A	TS152 x 51 x 6.4 BR. APP. SECT. LOWER RAIL NO. 1	98	B
N/A	TS152 x 51 x 6.4 BR. APP. SECT. LOWER RAIL NO. 2	98	B
N/A	TS152 x 51 TO TS152 x 152 CONNECTION SLEEVE	98	B
N/A	TS152 x 51 CONNECTION SLEEVE	98	B

NOTES:

① SEE AASHTO-AGC-ARTBA JOINT COMMITTEE TASK FORCE 13 REPORT "A GUIDE TO STANDARDIZED HIGHWAY BARRIER HARDWARE" PUBLICATION FOR ADDITIONAL AND DETAILED HARDWARE SPECIFICATIONS.

② GUARDRAIL TYPE CODES:

W = W-BEAM METAL GUARDRAIL
C = CABLE GUARDRAIL
B = BOX BEAM GUARDRAIL

ALL DIMENSIONS ARE MILLIMETERS (mm) UNLESS OTHERWISE NOTED.

DETAILED DRAWING

REFERENCE STANDARD SPEC. SECTION 606

DWG. NO. 606-80

SCHEDULE OF GUARDRAIL HARDWARE

EFFECTIVE: FEBRUARY 2005

MDT serving you with pride — MONTANA DEPARTMENT OF TRANSPORTATION

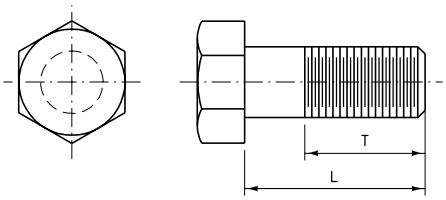

HEX BOLTS

BOLT SIZE	DESIGNATION *	L	T (MIN.)
REGULAR HEX BOLTS			
M10	FBX10a	89	38
M10	FBX10a	191	38
M12	FBX12a	38	FULL
M12	FBX12a	63	44
M14	FBX14a	203	51
M16	FBX16a	38	FULL
M20	FBX20a	203	51
M20	FBX20a	241	51
HIGH STRENGTH HEX BOLTS			
M20	FBX20b	51	38
M20	FBX20b	102	51
M20	FBX20b	203	51

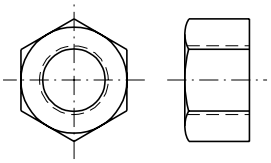

HEX NUT

NUT SIZE	DESIGNATION *
REGULAR HEX NUTS	
M8	FNX08a
M10	FNX10a
M12	FNX12a
M14	FNX14a
M16	FNX16a
M20	FNX20a
M24	FNX24a
HIGH STRENGTH HEX NUTS	
M20	FNX20b

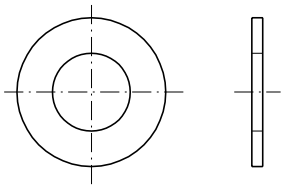

FLAT WASHERS

WASHER SIZE	DESIGNATION *
REGULAR FLAT WASHERS	
M10	FWC10a
M12	FWC12a
M14	FWC14a
M16	FWC16a
M20	FWC20a
M24	FWC24a
HARDENED FLAT WASHERS	
M20	FWC20b

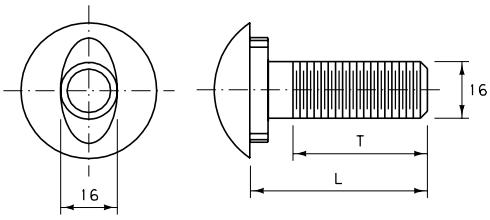

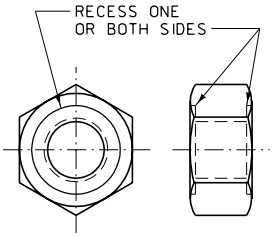

DESIGNATION *	L	T (MIN.)
FBB01	31	FULL
FBB02	51	38
FBB03	254	44
FBB04	457	63
FBB05	635	51

M16 GUARDRAIL BOLT & RECESS NUT

FBB01-05*

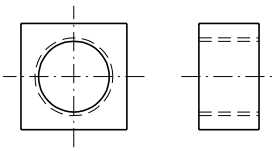

M20 SQUARE NUT

FNS20*

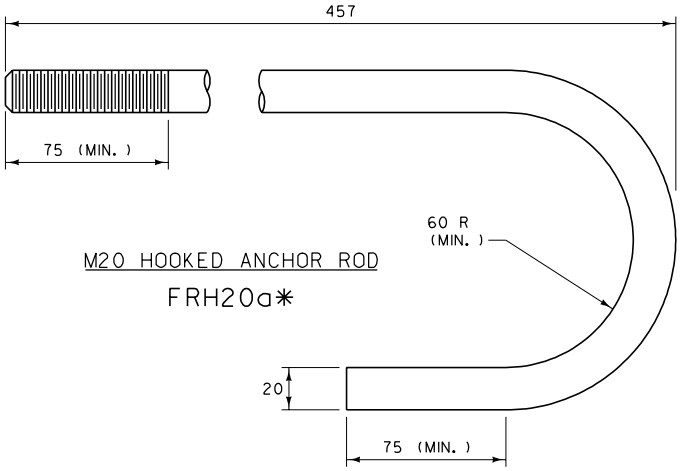

M20 HOOKED ANCHOR ROD

FRH20a*

NOTES:

1. BOLTS AND ANCHOR RODS ARE TO CONFORM TO THE REQUIREMENTS OF ASTM F568M CLASS 4.6. NUTS ARE TO CONFORM TO THE REQUIREMENTS OF AASHTO M291M (ASTM A563M) CLASS 5. USE STEEL WASHERS.

2. HIGH STRENGTH BOLTS ARE TO CONFORM TO THE REQUIREMENTS OF AASHTO M164M (ASTM A325M) TYPE 1. HIGH STRENGTH NUTS ARE TO CONFORM TO THE REQUIREMENTS OF AASHTO M291M (ASTM A563M) CLASS 10S. HARDENED WASHERS ARE TO CONFORM TO THE REQUIREMENTS OF AASHTO M293M (ASTM F436M).

3. GALVANIZE BOLTS, NUTS AND WASHERS IN ACCORDANCE WITH AASHTO M232M (ASTM A153M). NO PUNCHING, DRILLING OR CUTTING IS PERMITTED AFTER GALVANIZING.

* SEE DTL. DWG. NO. 606-80 FOR SCHEDULE OF GUARDRAIL HARDWARE.

ALL DIMENSIONS ARE MILLIMETERS (mm) UNLESS OTHERWISE NOTED.

DETAILED DRAWING

REFERENCE STANDARD SPEC. SECTION 606

DWG. NO. 606-82

GUARDRAIL HARDWARE

EFFECTIVE: FEBRUARY 2005

serving you with pride

MONTANA DEPARTMENT OF TRANSPORTATION

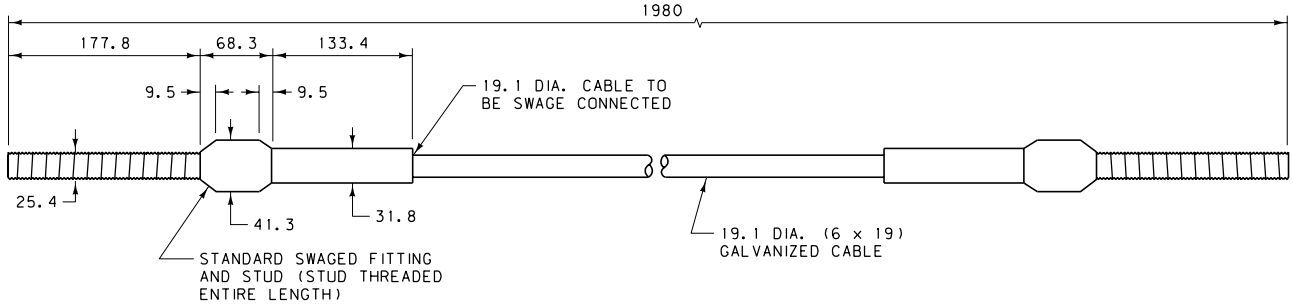

NOTES:

① FOR RELATED FASTENER HARDWARE SEE FWC24a*, FNX24a* AND FPA01*.

② MACHINE THE SWAGED FITTING FROM HOT-ROLLED CARBON STEEL. CONFORMING TO THE REQUIREMENTS OF ASTM A576M, GRADE 1035, AND ANNEAL SUITABLE FOR COLD SWAGING. GALVANIZE THE SWAGED FITTING IN ACCORDANCE WITH AASHTO M111M (ASTM A123M) BEFORE SWAGING. DRILL A LOCK PIN HOLE TO ACCOMMODATE A 6.4 mm, PLATED SPRING STEEL PIN THROUGH THE HEAD OF THE SWAGED FITTING TO RETAIN THE STUD IN THE PROPER POSITION.

③ THE STUD IS TO CONFORM TO THE REQUIREMENTS OF ASTM F568M CLASS 8.8 AND BE GALVANIZED IN ACCORDANCE WITH AASHTO M232M (ASTM A153M). PRIOR TO GALVANIZING, MILL A 9.5 mm SLOT INTO THE STUD END FOR THE LOCKING PIN.

④ WIRE ROPE IS TO CONFORM TO THE REQUIREMENTS OF AASHTO M30M AND BE 19.1 mm PREFORMED, 6 x 19, WIRE STRAND CORE OR INDEPENDENT WIRE ROPE CORE (IWRC), GALVANIZED, RIGHT REGULAR LAY, MANUFACTURED OF IMPROVED PLOW STEEL WITH A MINIMUM BREAKING STRENGTH OF 190.4 kN.

⑤ THE SWAGED FITTING, STUD AND NUT (FNX24a*) MUST DEVELOP THE BREAKING STRENGTH OF THE WIRE ROPE.

CABLE ASSEMBLY

FCA01*

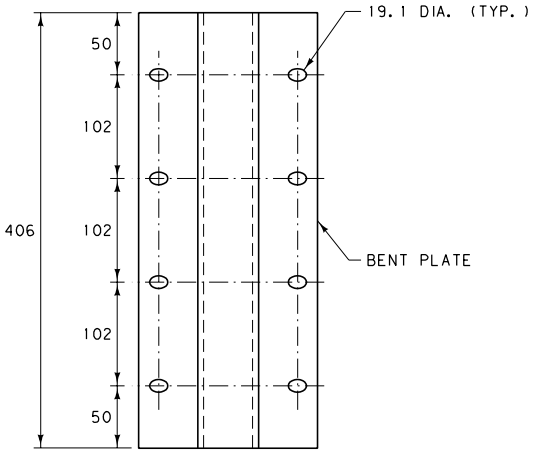

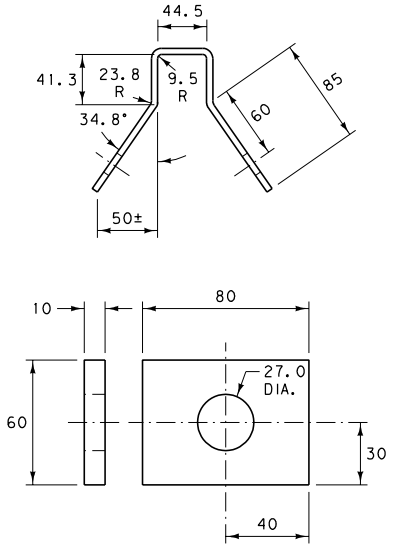

ANCHOR BRACKET & END PLATE

FPA01*

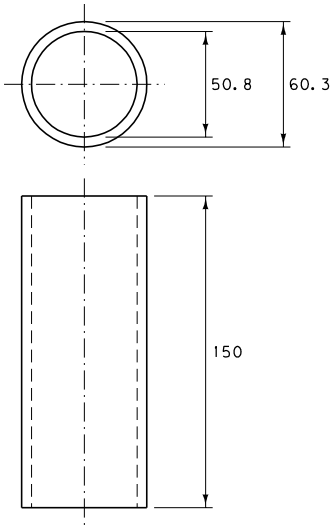

POST SLEEVE

FMM02*

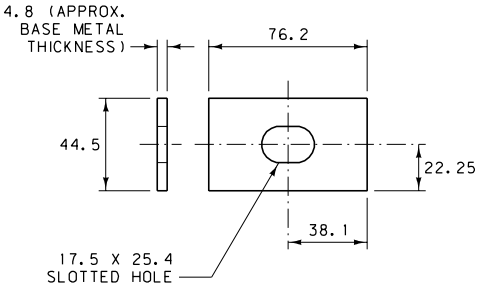

RECTANGULAR PLATE WASHER

FWR03*

NOTES:

⑥ ANCHOR BRACKETS, END PLATES AND RECTANGULAR PLATE WASHERS ARE TO CONFORM TO THE REQUIREMENTS OF AASHTO M270M (ASTM A709M) GRADE 250 STEEL PLATE. POST SLEEVES ARE TO CONFORM TO THE REQUIREMENTS OF ASTM A53M GRADE B.

⑦ GALVANIZE FABRICATED PARTS IN ACCORDANCE WITH AASHTO M111M (ASTM A123M). NO PUNCHING, DRILLING OR CUTTING IS PERMITTED AFTER GALVANIZING.

* SEE DTL. DWG. NO. 606-80 FOR SCHEDULE OF GUARDRAIL HARDWARE.

ALL DIMENSIONS ARE MILLIMETERS (mm) UNLESS OTHERWISE NOTED.

DETAILED DRAWING	
REFERENCE STANDARD SPEC. SECTION 606	DWG. NO. 606-84
W-BEAM METAL GUARDRAIL HARDWARE	
EFFECTIVE: FEBRUARY 2005	

serving you with pride — MONTANA DEPARTMENT OF TRANSPORTATION

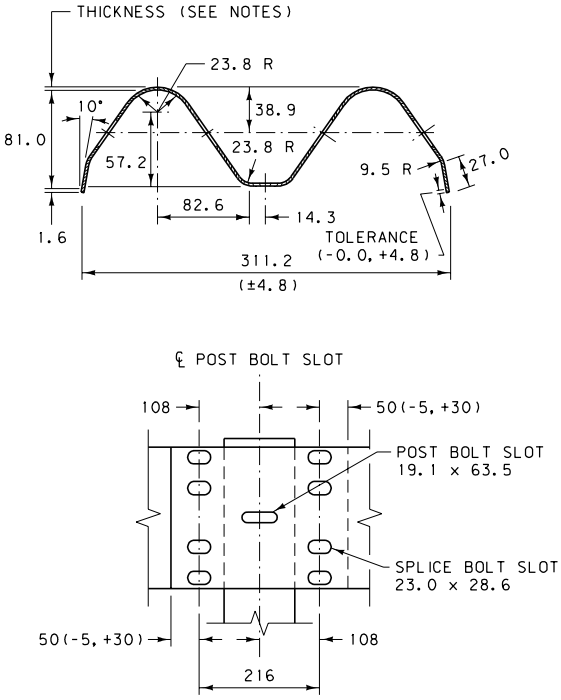

W-BEAM

RWM02a-b* (3.81 m LENGTH) OR RWM22a-b* (7.62 m LENGTH)

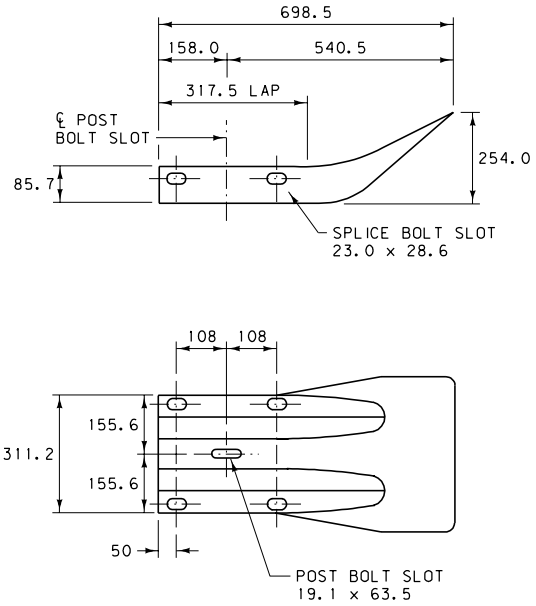

W-BEAM END SECTION (FLARED)

RWE01a-b*

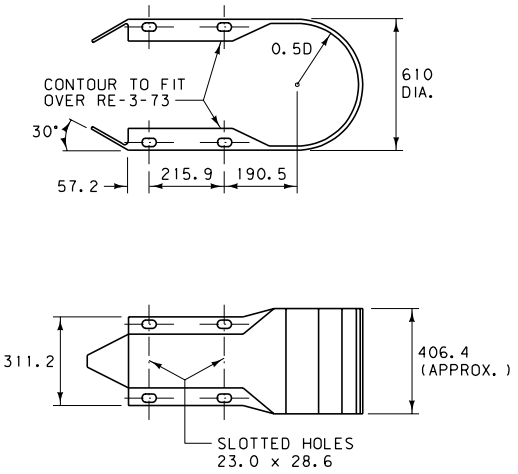

W-BEAM END SECTION (BUFFER)

RWE06a-b*

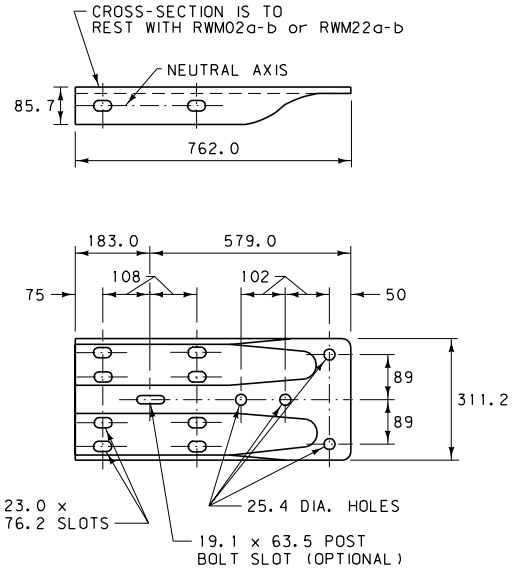

W-BEAM TERMINAL CONNECTOR

RWE02a-b*

NOTES:

* DESTINATION SUFFIX	METAL THICKNESS
a	12 GAGE (2.7 mm)
b	10 GAGE (3.5 mm)

* SEE DTL. DWG. NO. 606-80 FOR SCHEDULE OF GUARDRAIL HARDWARE.

ALL DIMENSIONS ARE MILLIMETERS (mm) UNLESS OTHERWISE NOTED.

DETAILED DRAWING

REFERENCE STANDARD SPEC. SECTION 606

DWG. NO. 606-88

W-BEAM METAL GUARDRAIL HARDWARE

EFFECTIVE: FEBRUARY 2005

MDT serving you with pride — MONTANA DEPARTMENT OF TRANSPORTATION

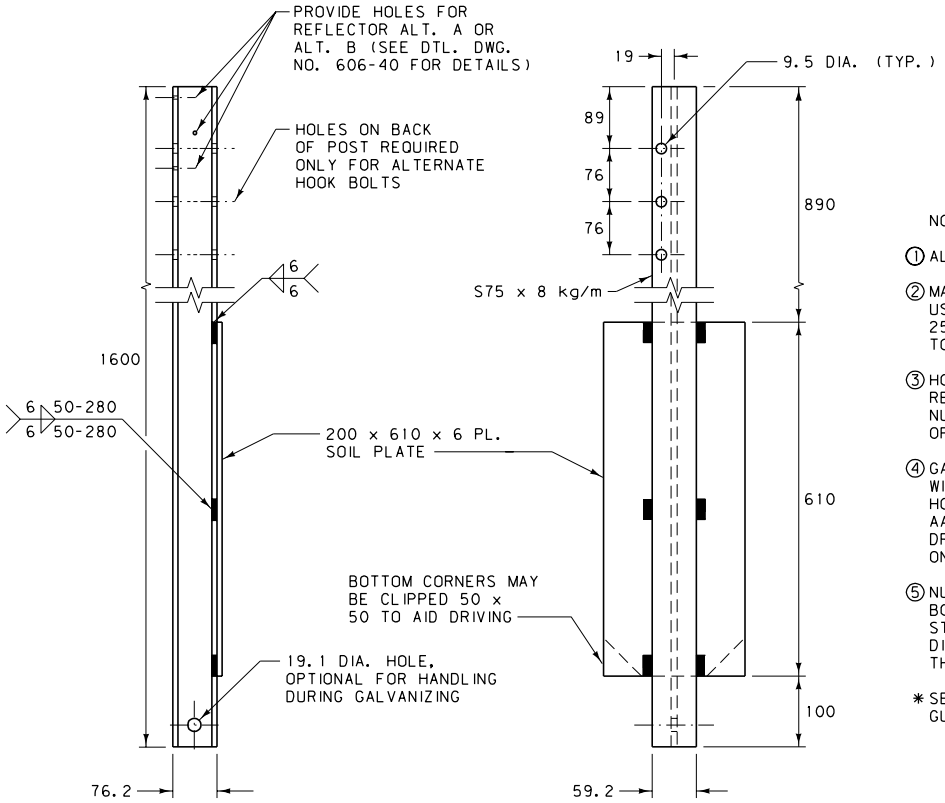

NOTES:

1. ALL HOLES ARE 9.5 mm EXCEPT AS NOTED.
2. MANUFACTURE POSTS AND SOIL PLATES USING AASHTO M270M (ASTM A709M) GRADE 250 STEEL. ALL WELDING IS TO CONFORM TO THE APPLICABLE AWS CODE.
3. HOOK BOLTS ARE TO CONFORM TO THE REQUIREMENTS OF ASTM 568M CLASS 4.6. NUTS ARE TO CONFORM TO THE REQUIREMENTS OF AASHTO M291M (ASTM A563M) CLASS 5.
4. GALVANIZE FABRICATED PARTS IN ACCORDANCE WITH AASHTO M111M (ASTM A123M). GALVANIZE HOOK BOLTS AND NUTS IN ACCORDANCE WITH AASHTO M232M (ASTM A153M). NO PUNCHING, DRILLING, WELDING OR CUTTING IS PERMITTED ON COMPONENTS AFTER GALVANIZING.
5. NUTS ARE OF THE HEAVY HEX TYPES. INSTALL BOLTS TO DEVELOP AN ULTIMATE PULL OPEN STRENGTH FROM 2225 N TO 4450 N APPLIED IN A DIRECTION NORMAL TO THE LONGITUDINAL AXIS OF THE POST.

* SEE DTL. DWG. NO. 606-80 FOR SCHEDULE OF GUARDRAIL HARDWARE.

CABLE GUARDRAIL POST AND SOIL PLATE

PSE01* AND PLS01*

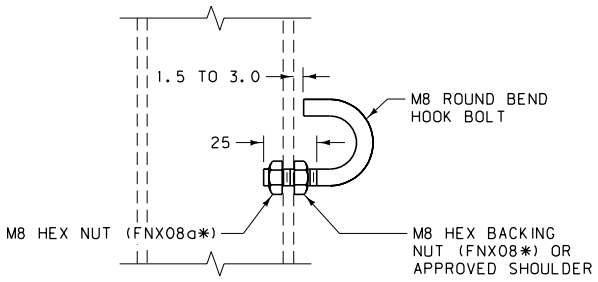

M8 HOOK BOLT

FBH01*

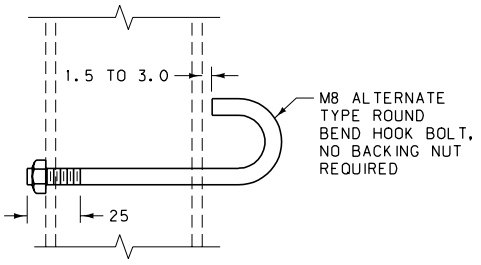

ALTERNATE M8 HOOK BOLT

FBH02*

ALL DIMENSIONS ARE MILLIMETERS (mm) UNLESS OTHERWISE NOTED.

DETAILED DRAWING	
REFERENCE STANDARD SPEC. SECTION 606	DWG. NO. 606-92
CABLE GUARDRAIL HARDWARE	
EFFECTIVE: FEBRUARY 2005	

serving you with pride — MONTANA DEPARTMENT OF TRANSPORTATION

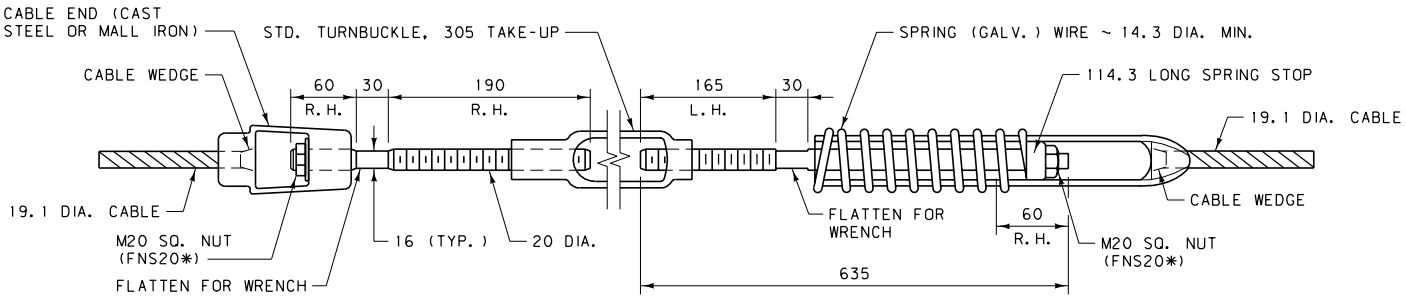

COMPENSATING CABLE END ASSEMBLY

RCE01*

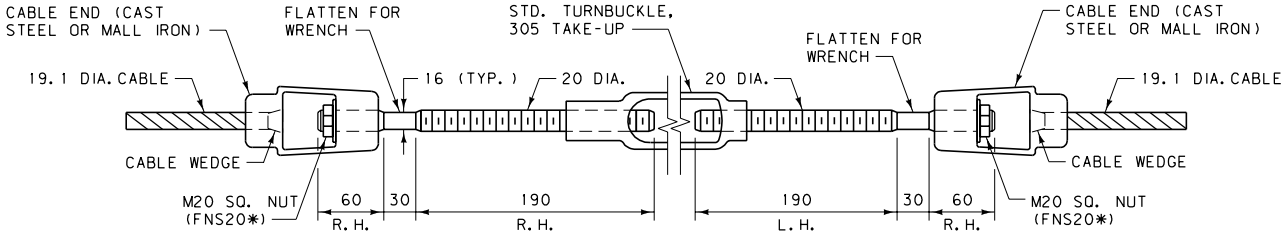

TURNBUCKLE CABLE END ASSEMBLY

R.H. = RIGHT HAND
L.H. = LEFT HAND

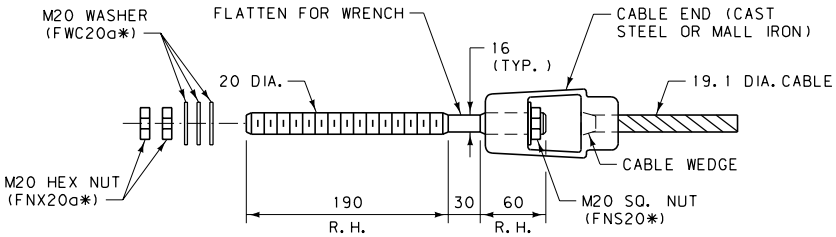

CABLE END ASSEMBLY

RCE03*

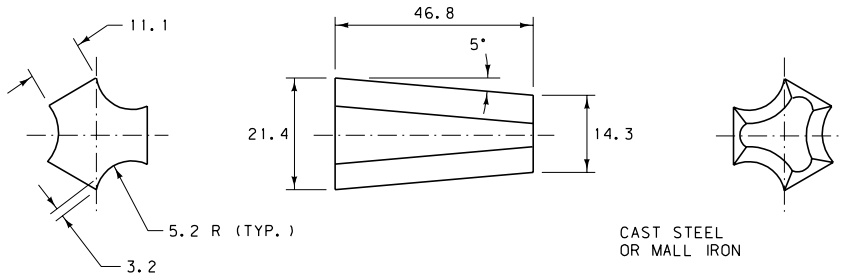

CABLE WEDGE

FMM01*

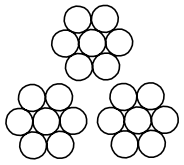

19.1 DIA. - 3 x 7 WIRE ROPE

19.1 DIA. CABLE

RCM01*

NOTES:

1. WIRE ROPE AND CONNECTING HARDWARE ARE TO CONFORM TO THE REQUIREMENTS OF AASHTO M30M TYPE 1 CLASS A, 19.1 mm ROPE. CONNECTING HARDWARE MUST DEVELOP THE FULL STRENGTH OF A SINGLE CABLE (111.2 kN). CAST STEEL COMPONENTS ARE TO CONFORM TO THE REQUIREMENTS OF AASHTO M103M (ASTM A27M). MALLEABLE IRON CASTINGS ARE TO CONFORM TO THE REQUIREMENTS OF ASTM A47M.
2. AT ALL LOCATIONS WHERE THE CABLE IS CONNECTED TO A CABLE SOCKET WITH A WEDGE TYPE CONNECTION, CRIMP ONE WIRE OF THE CABLE OVER THE BASE OF THE WEDGE TO HOLD IT FIRMLY IN PLACE.
3. COMPENSATING DEVICES ARE TO HAVE SPRING CONSTANTS OF 78.8 N/mm, PLUS OR MINUS 8.8 N/mm, AND PERMIT A TRAVEL OF 150 mm PLUS OR MINUS 25 mm.
4. DESIGN SOCKET BASKETS FOR USE WITH THE WEDGE DETAILED IN THIS DRAWING.
5. ALTERNATE HARDWARE DESIGNS WILL BE CONSIDERED FOR APPROVAL PROVIDED THEIR CONNECTION DETAILS, FOR THE PURPOSE OF MAINTENANCE SUBSTITUTIONS, ARE COMPATIBLE WITH THE DETAILS OF THIS DRAWING AND THEIR OPERATING CHARACTERISTICS ARE SIMILAR TO THOSE OF THE HARDWARE IN THIS DRAWING.

* SEE DTL. DWG. NO. 606-80 FOR SCHEDULE OF GUARDRAIL HARDWARE.

ALL DIMENSIONS ARE MILLIMETERS (mm) UNLESS OTHERWISE NOTED.

DETAILED DRAWING	
REFERENCE STANDARD SPEC. SECTION 606	DWG. NO. 606-94
CABLE GUARDRAIL HARDWARE	
EFFECTIVE: FEBRUARY 2005	

MDT serving you with pride — MONTANA DEPARTMENT OF TRANSPORTATION

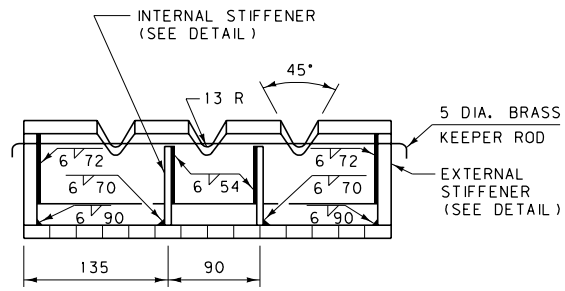

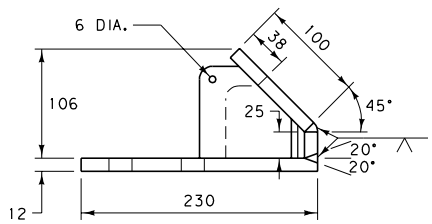

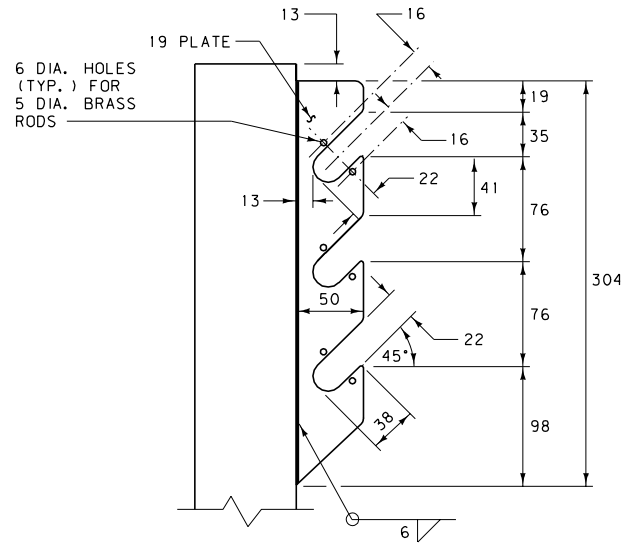

CABLE SUPPORT DETAIL

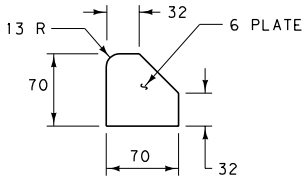

INTERNAL STIFFENER

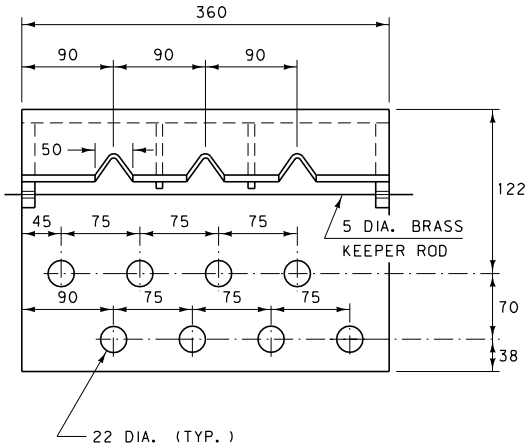

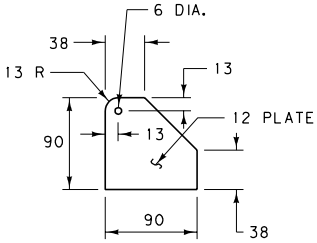

EXTERNAL STIFFENER

CABLE ANCHOR BRACKET

FPA02*

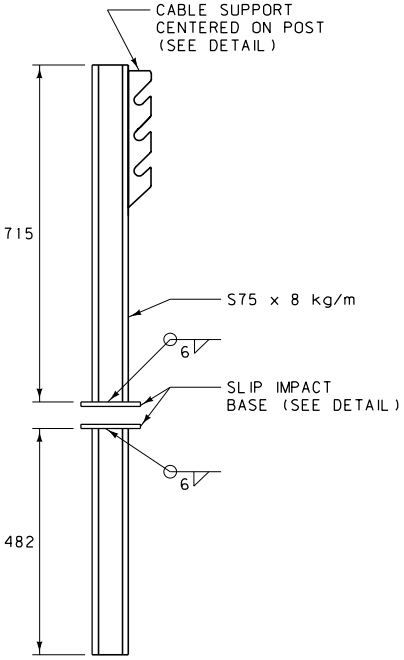

NOTES:

1. MANUFACTURE ANCHOR POSTS AND BRACKETS USING AASHTO M270M (ASTM A709M) GRADE 250 STEEL. ALL WELDING IS TO CONFORM TO THE APPLICABLE AWS CODE.

2. GALVANIZE FABRICATED PARTS IN ACCORDANCE WITH AASHTO M111M (ASTM A123M). NO PUNCHING, DRILLING, WELDING OR CUTTING IS PERMITTED ON COMPONENTS AFTER GALVANIZING.

* SEE DTL. DWG. NO. 606-80 FOR SCHEDULE OF GUARDRAIL HARDWARE.

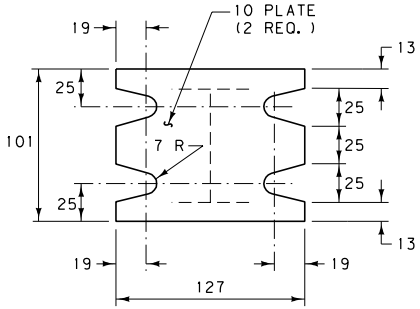

SLIP IMPACT BASE

(KEEPER PLATE NOT SHOWN)

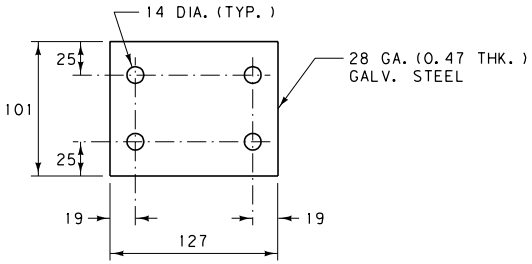

KEEPER PLATE

CABLE GUARDRAIL ANCHOR POST

PSE06*

ALL DIMENSIONS ARE MILLIMETERS (mm) UNLESS OTHERWISE NOTED.

DETAILED DRAWING	
REFERENCE STANDARD SPEC. SECTION 606	DWG. NO. 606-95
CABLE GUARDRAIL HARDWARE	
EFFECTIVE: FEBRUARY 2005	

MDT serving you with pride — MONTANA DEPARTMENT OF TRANSPORTATION

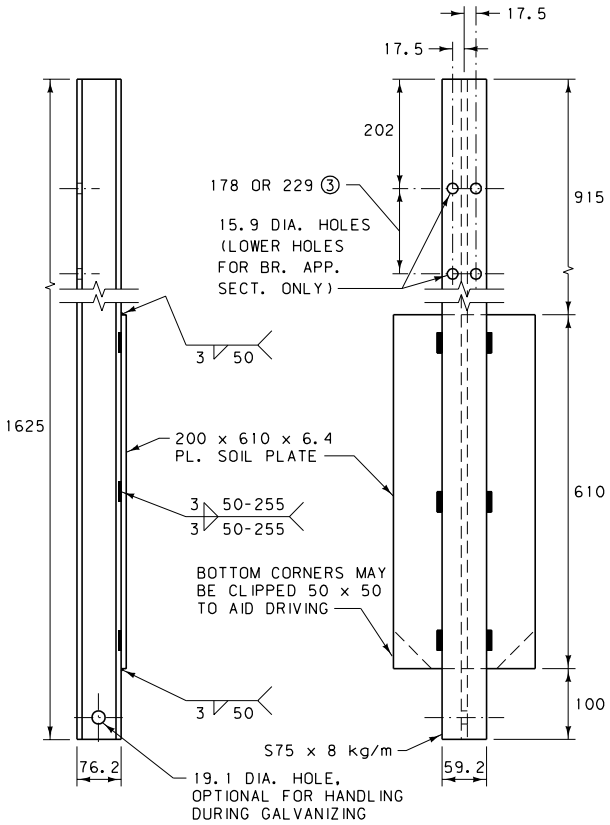

TYPE A BOX BEAM POST AND SOIL PLATE

PSE08* AND PLS01*

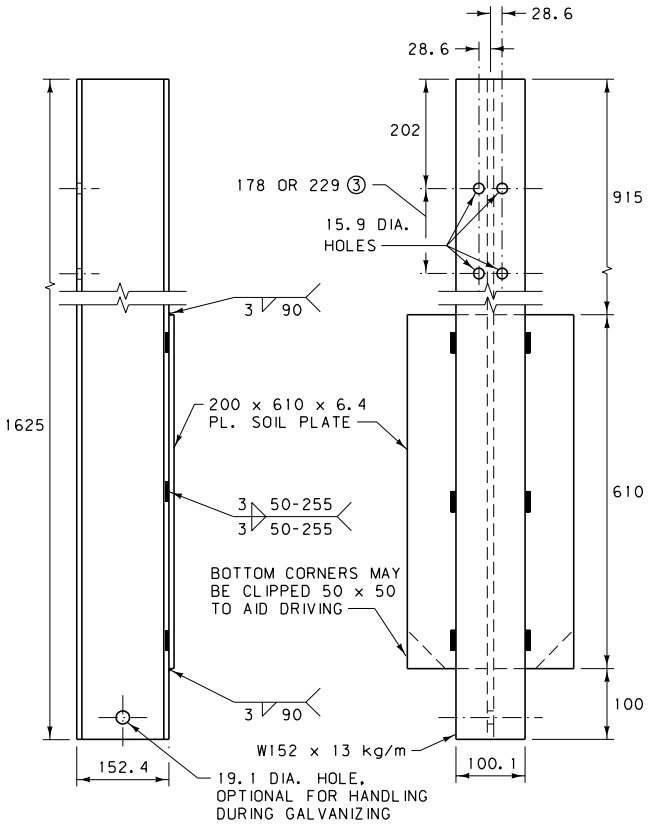

TYPE B BOX BEAM POST AND SOIL PLATE

PLS01*

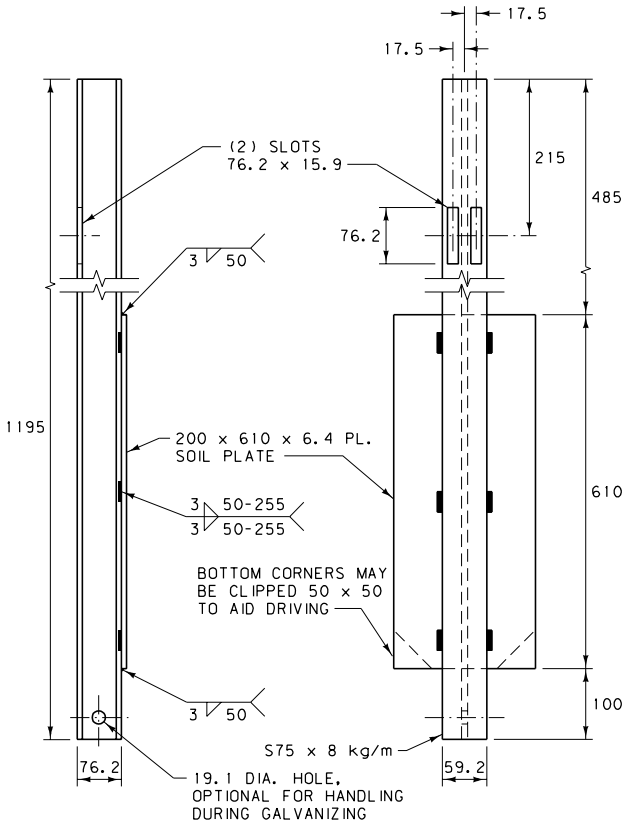

TYPE D BOX BEAM POST AND SOIL PLATE

PSE05* AND PLS01*

NOTES:

① MANUFACTURE POSTS, SOIL PLATES AND SUPPORT BRACKETS USING AASHTO M270M, GRADE 250 STEEL. ALL WELDING IS TO CONFORM TO THE APPLICABLE AWS CODE.

② GALVANIZE FABRICATED POSTS AND BRACKETS IN ACCORDANCE WITH AASHTO M111M. NO PUNCHING, DRILLING, WELDING OR CUTTING IS PERMITTED ON COMPONENTS AFTER GALVANIZING.

③ SEE DTL. DWG. NO. 606-53 (BOX BEAM BR. APP. SECT.) FOR REQUIRED LOCATION OF LOWER HOLES IN TYPE A AND B POSTS.

* SEE DTL. DWG. NO. 606-80 FOR SCHEDULE OF GUARDRAIL HARDWARE.

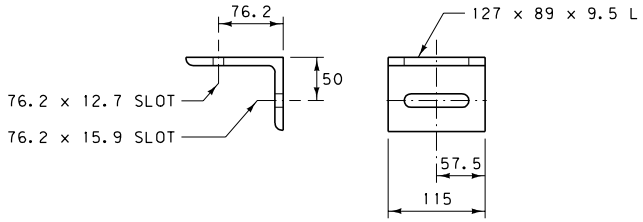

BOX BEAM SUPPORT BRACKET

FPP01*

ALL DIMENSIONS ARE MILLIMETERS (mm) UNLESS OTHERWISE NOTED.

DETAILED DRAWING	
REFERENCE STANDARD SPEC. SECTION 606	DWG. NO. 606-97
BOX BEAM GUARDRAIL HARDWARE	
EFFECTIVE: FEBRUARY 2005	

MDT serving you with pride — MONTANA DEPARTMENT OF TRANSPORTATION

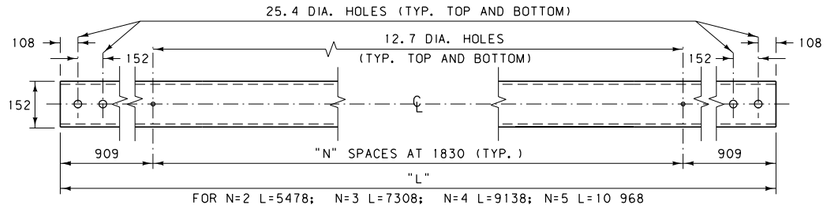

BOX BEAM RAIL (TS152 x 152 x 4.8)

RBM01*

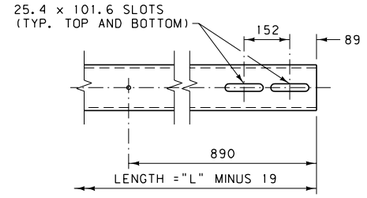

BOX BEAM EXPANSION SPLICE END

ONE END OF BOX BEAM RAIL ONLY. REQUIRED FOR BOTH RAILS AT THE EXPANSION SPLICE.

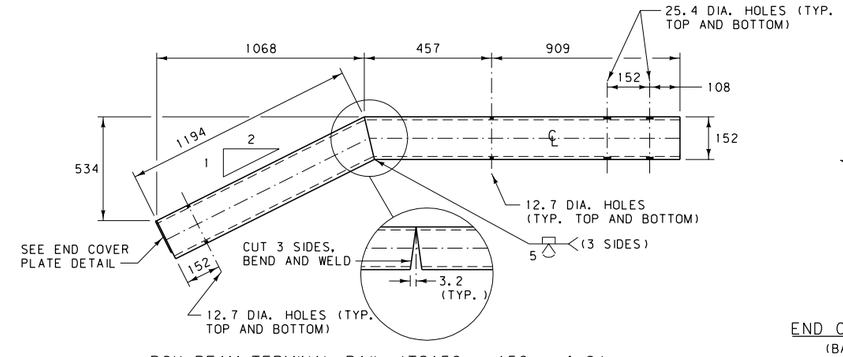

BOX BEAM TERMINAL RAIL (TS152 x 152 x 4.8)

RBM05*

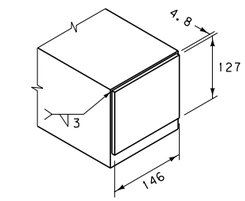

END COVER PLATE DETAIL

(BAR 127 x 4.8 x 146)

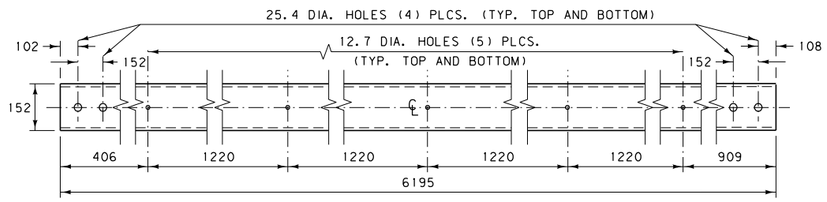

TS152 x 152 x 4.8 BR. APP. SECT. UPPER RAIL NO. 1

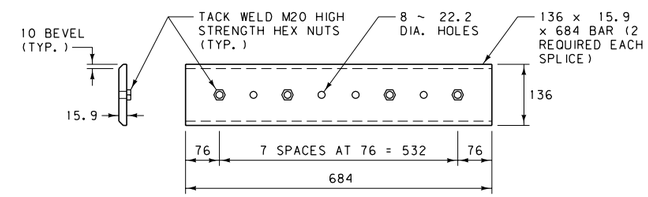

BOX BEAM SPLICE PLATE

RBS01*

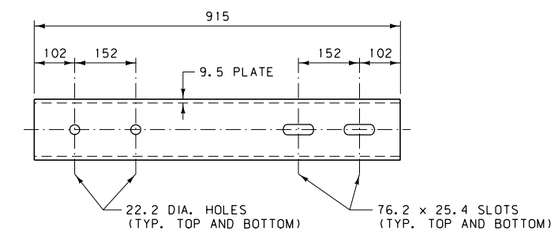

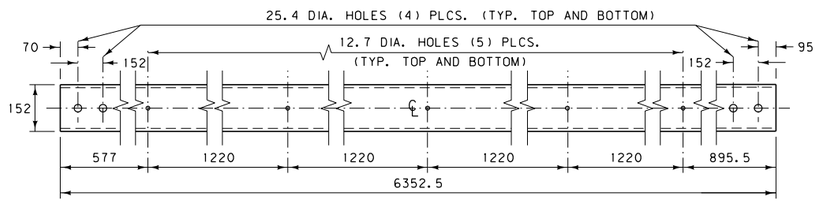

TS152 x 51 x 6.4 BR. APP. SECT. LOWER RAIL NO. 1

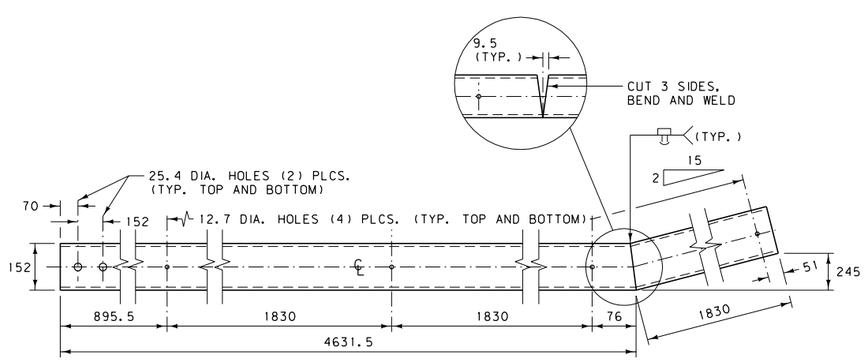

TS152 x 51 x 6.4 BR. APP. SECT. LOWER RAIL NO. 2

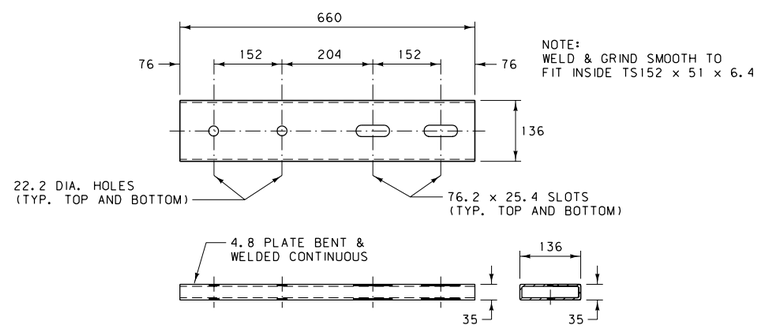

TS152 x 51 CONNECTION SLEEVE

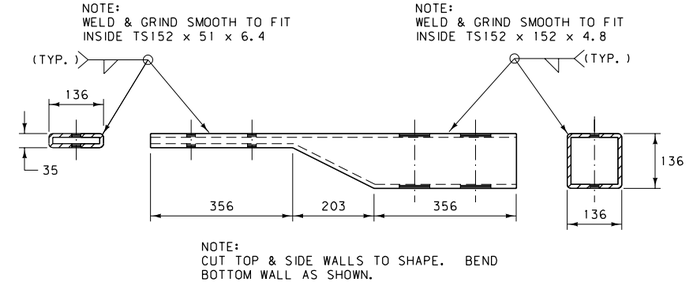

TS152 x 51 TO TS152 x 152 CONNECTION SLEEVE

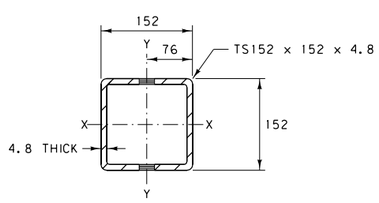

TS152 x 152 x 4.8 SECTION VIEW

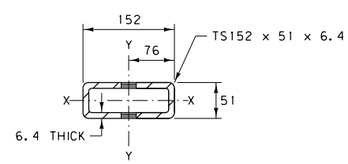

TS152 x 51 x 6.4 SECTION VIEW

NOTES:

1. MANUFACTURE BOX BEAM RAIL ELEMENTS FROM EITHER ASTM A500M GRADE B COLD ROLLED TUBING, ASTM A501M HOT-ROLLED TUBING OR AUTOMOTIVE ROLLOVER PROTECTIVE STEEL (ROPS). WHEN ASTM A500M GRADE B STEEL IS USED, TEST THE MATERIAL PER ASTM E436M.
2. FABRICATE SPLICE PLATES AND CONNECTION SLEEVES FROM AASHTO M270M GRADE 250 STEEL PLATE. THE NUTS ARE TO BE PLAIN UN-COATED M20 HIGH STRENGTH HEX NUTS. WELD THE NUTS TO THE PLATES IN ACCORDANCE WITH THE APPLICABLE AWS CODE.
3. GALVANIZE FABRICATED RAIL, CONNECTION SLEEVES, AND SPLICE PLATES IN ACCORDANCE WITH AASHTO M111M. NO PUNCHING, DRILLING, WELDING OR CUTTING IS PERMITTED ON COMPONENTS AFTER GALVANIZING.

* SEE DTL. DWG. NO. 606-80 FOR SCHEDULE OF GUARDRAIL HARDWARE.

ALL DIMENSIONS ARE MILLIMETERS (mm) UNLESS OTHERWISE NOTED.

DETAILED DRAWING	
REFERENCE STANDARD SPEC. SECTION 606	DWG. NO. 606-98
BOX BEAM GUARDRAIL HARDWARE	
EFFECTIVE: FEBRUARY 2005	
serving you with pride	MONTANA DEPARTMENT OF TRANSPORTATION

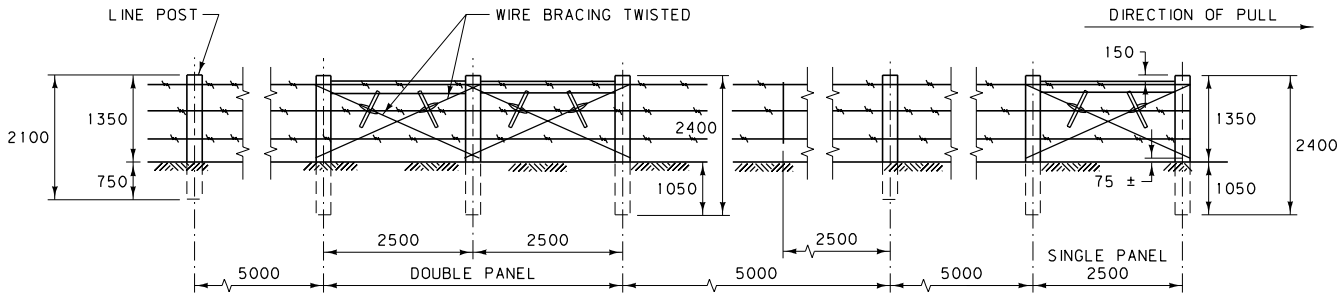

WIRE SPACING TABLE

COMBINATION WOVEN WIRE & BARBED WIRE FENCE			BARBED WIRE FENCE			
1200 FENCE HEIGHT		1280 FENCE HEIGHT	1.2 m FENCE HEIGHT			
813 WW-2 BW *	813 WW-3 BW *	990 WW-2 BW *	3 BW	4 BW	5 BW	6 BW
TYPE F2-813WW	TYPE F3-813WW	TYPE F2-990WW	TYPE F3	TYPE F4	TYPE F5	TYPE F6

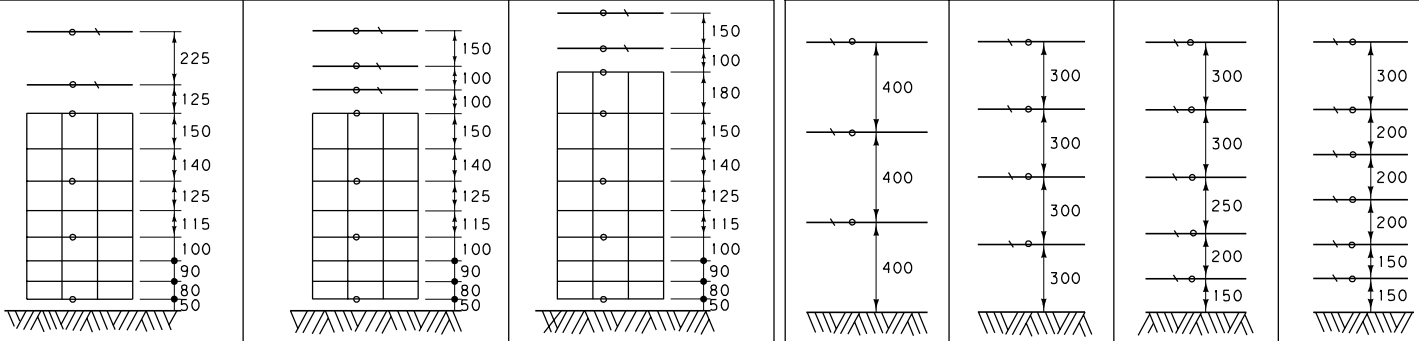

APPROXIMATE WEIGHT OF 813 mm WOVEN WIRE FABRIC (832-6-12.5) PER 100 m ROD ROLL IS 68 kg ±5 kg (NOTE: 12.5 GAGE)

APPROXIMATE WEIGHT OF 990 WOVEN WIRE FABRIC (939-6-12.5) PER 100 m ROLL IS 77 kg ±5 kg. (NOTE: 12.5 GAGE)

○ DENOTES STAPLE LOCATIONS

* OTHER WOVEN WIRE HEIGHTS AND NUMBER OF BARBED WIRE COMBINATIONS ARE AVAILABLE.

STAYS

1. USE WIRE STAYS ON ALL FENCES UNLESS WOOD STAYS ARE SPECIFIED.
2. LOCATE STAYS HALFWAY BETWEEN LINE POSTS.
3. WIRE STAYS FOR BARBED WIRE FENCING ARE 50 mm LONGER THAN THE DISTANCE BETWEEN THE TOP AND BOTTOM WIRES.
4. FOR WOVEN WIRE FENCING WITH BARBED WIRE ON TOP, EXTEND WIRE STAYS 150 mm MINIMUM BELOW THE TOP OF THE WOVEN WIRE.
5. WHEN WOOD STAYS ARE SPECIFIED, USE EITHER 50 mm ROUND, A ROUGH DIMENSION 50 mm x 50 mm, OR A 37.5 mm x 87.5 mm (NOMINAL 50 mm x 100 mm). THE STAY MUST BE OF SUFFICIENT LENGTH TO BE PLACED ON THE GROUND WITH THE TOP OF THE STAY EXTENDING 50 mm ABOVE THE TOP WIRE. ATTACH EACH WIRE TO THE WOOD STAYS USING 44 mm x 9 GAGE STAPLES. WOOD STAYS DO NOT NEED TO BE TREATED.

NOTES:

"M" DENOTES METAL POSTS, EG. TYPE F3M.
"W" DENOTES WOOD POSTS, EG. TYPE F4W.

SEE DTL. DWG. NO. 607-05 FOR SINGLE AND DOUBLE PANEL DETAILS.
SEE DTL. DWG. NO. 607-10 FOR ADDITIONAL FENCING DETAILS.

SEE THE STANDARD SPECIFICATIONS FOR POST REQUIREMENTS.

ALL DIMENSIONS ARE MILLIMETERS (mm) UNLESS OTHERWISE NOTED.

DETAILED DRAWING

REFERENCE
STANDARD SPEC.
SECTION 607

DWG. NO.
607-00

FARM FENCE

EFFECTIVE: FEBRUARY 2005

serving you with pride

MONTANA DEPARTMENT OF TRANSPORTATION

BRACE WIRES - ONE CONTINUOUS 9 OR 12.5 GAGE SMOOTH WIRE DOUBLED TO FORM A FOUR WIRE BRACE. TIE THE TWO ENDS NEAR THE TOP OF THE PANEL POSTS.

LEVERS - 37.5 x 50 x 300 MINIMUM SIZE.

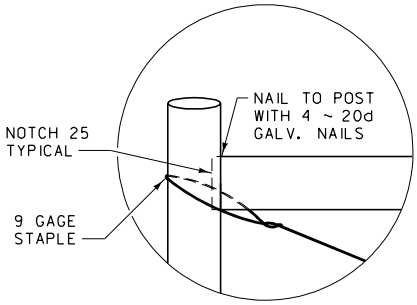

DETAIL "A"

WHEN SQUARE POSTS ARE USED, NOTCHING IS NOT NECESSARY.

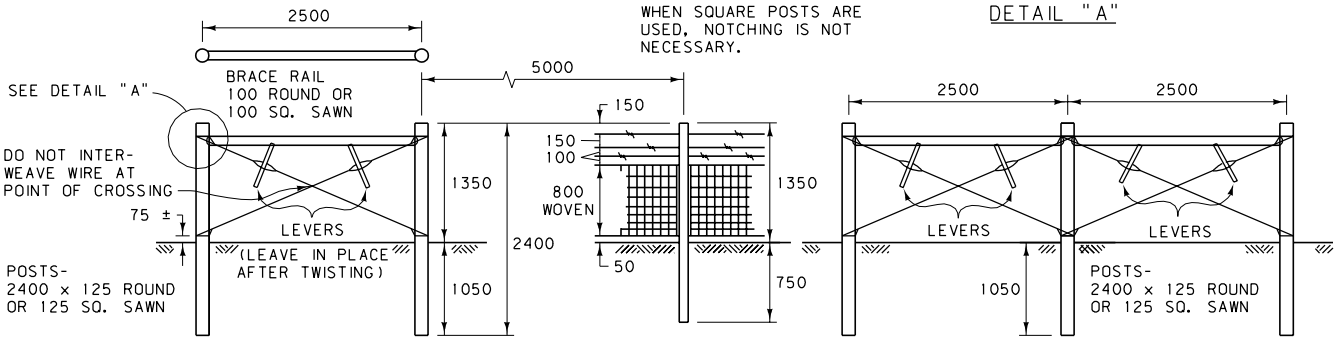

SINGLE PANEL

FOR PULLING, STRETCHING, CHANGES IN VERTICAL ALIGNMENT OR PANELS ON A RUN OF LESS THAN 100 m.

LINE POST

2100 x 100 MIN. ROUND OR 100 x 100 SQ. SAWN

DOUBLE PANEL

FOR CORNERS, PULLING OR STRETCHING, AND CHANGES IN HORIZONTAL ALIGNMENT.

TYPE "CW" - "STRAIGHT RUN" FENCE WITH WOOD POSTS

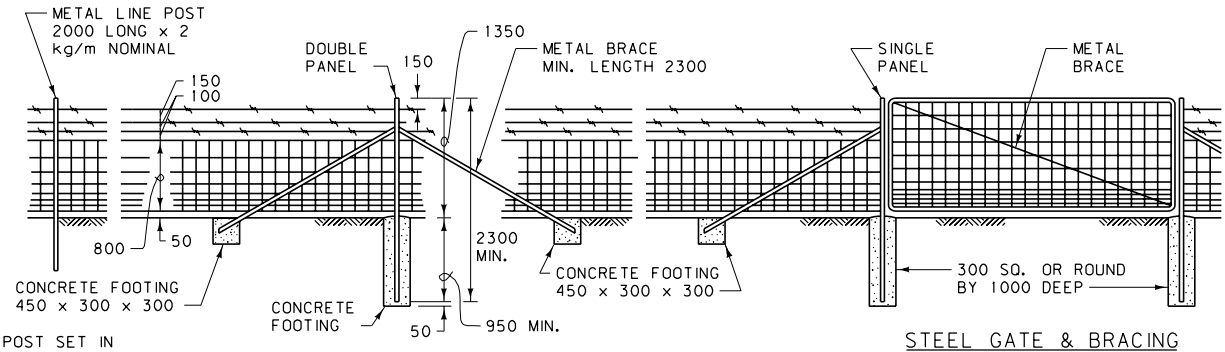

WHEN POST SET IN SOLID ROCK, PROVIDE 450 MIN. BURIAL.

STEEL GATE & BRACING

TYPE "CM" - FENCE WITH STEEL POSTS

NOTES:

SEE THE STANDARD SPECIFICATIONS FOR POST AND GATE REQUIREMENTS.

PLACE ALL FENCE WIRE ON PASTURE SIDE OF POST, EXCEPT ON CURVES. THEN, PLACE THE WIRE ON THE OUTSIDE OF THE CURVE.

IN AREAS SUBJECT TO HIGH VELOCITY WINDS AND MOVING DEBRIS, WIRES MAY BE PLACED ON WINDWARD SIDE OF POSTS, EXCEPT ON CURVES.

ALL CONCRETE IS CLASS "F" OR BETTER.

POST SPACING IS GENERALLY MEASURED PARALLEL TO GROUND.

LINE POST SPACING IS 5000 mm CENTER TO CENTER. LINE POST SPACING FROM BRACE OR PANEL POST IS 5000 mm CENTER TO CENTER.

PLACE 600 mm WIRE STAY HALFWAY BETWEEN POSTS. DO NOT PLACE STAYS ON PANELS FOR "CM" AND "CW" FENCE.

TYPE "CW" FENCE HAS ONE METAL POST IN PLACE OF A WOODEN LINE POST IN EACH 150 m RUN FOR LIGHTNING PROTECTION.

USE TYPE "CW" (WOOD) PANELS ON ALL TYPE "CM" (METAL) FENCES INSTEAD OF STEEL PANELS UNLESS OTHERWISE SPECIFIED.

SET STEEL CORNER, END, GATE AND PULL POSTS, AND EACH BRACE IN CONCRETE AS SHOWN.

SEE DTL. DWG. NO. 607-10 FOR ADDITIONAL FENCING DETAILS.

A DEADMAN MAY BE A PRECAST CONCRETE BLOCK, A CAST IN PLACE CONCRETE BLOCK, A ROCK OR OTHER APPROVED OBJECT WEIGHING AT LEAST 70 kg. BURY THE DEADMAN IN THE GROUND WITH AT LEAST 600 mm OF COVER. ATTACH THE DEADMAN TO THE FENCE WITH 3 STRANDS OF 9 GAGE WIRE OR 6 STRANDS OF 12.5 GAGE WIRE. SEE DETAILED DRAWING NO. 607-10 FOR ALTERNATE DEADMAN.

STAPLE THE BOTTOM, TOP, CENTER AND ALTERNATE WIRES OF WOVEN WIRE TO WOOD LINE POSTS.

TIE THE BOTTOM, TOP, CENTER AND ALTERNATE WIRES OF WOVEN WIRE TO STEEL LINE POSTS.

STAPLE ALL WIRES OF WOVEN WIRE TO WOOD CORNER POSTS OR POST USED TO TIE-OFF WIRE.

ALL DIMENSIONS ARE MILLIMETERS (mm) UNLESS OTHERWISE NOTED.

DETAILED DRAWING	
REFERENCE STANDARD SPEC. SECTION 607	DWG. NO. 607-05
INTERSTATE FENCE	
EFFECTIVE: FEBRUARY 2005	

MDT serving you with pride — MONTANA DEPARTMENT OF TRANSPORTATION

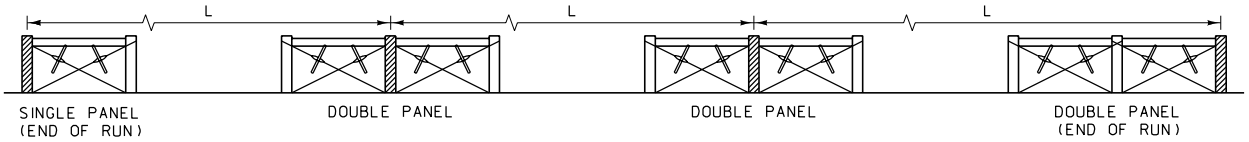

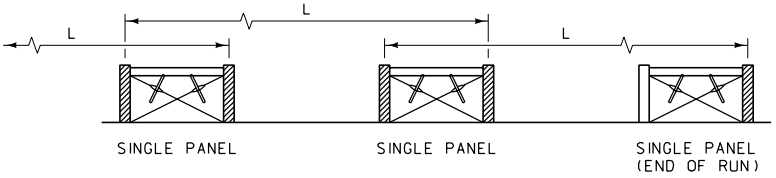

FENCE TYPE	RUN = L (m)	PANELS REQUIRED
COMBINATION WOVEN/BARBED	LESS THAN 10	NONE
	10 - 100	SINGLE
	OVER 100 TO 200 MAX.	DOUBLE
BARBED	LESS THAN 20	NONE
	20 - 200	SINGLE
	OVER 200 TO 300 MAX.	DOUBLE

NOTE:
TIE OFF ON ALL CROSS HATCHED OR SHADED POSTS.

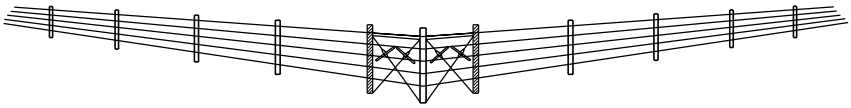

DOUBLE PANEL AT FENCE CORNER OR ANGLE BREAK

FENCE PANEL TYPES

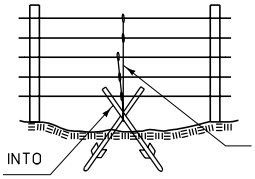

ALTERNATE DEADMAN

WHEN APPROVED BY THE ENGINEER THE ABOVE DEADMAN MAY BE USED IN LIEU OF A ROCK OR PRECAST CONCRETE BLOCK AS SPECIFIED ON DTL. DWG. NO. 607-05.

ALL DIMENSIONS ARE MILLIMETERS (mm) UNLESS OTHERWISE NOTED.

NOTES:

ATTACH BARBED WIRES TO POSTS BY WRAPPING AROUND THE POST AT LEAST TWO TIMES, THEN WRAPPING AROUND ITSELF FIVE TIMES.

TO ATTACH WOVEN WIRE TO AN END POST, REMOVE TWO OR THREE VERTICAL STAY WIRES FROM THE END OF THE FENCE. PLACE THE FIRST COMPLETE VERTICAL STAY WIRE AGAINST THE POST. START AT THE MIDDLE OF THE HORIZONTAL LINE WIRES, WRAPPING AROUND THE END POST AT LEAST TWO TIMES AND THEN WRAPPING AROUND ITSELF FIVE TIMES.

DETAILED DRAWING	
REFERENCE STANDARD SPEC. SECTION 607	DWG. NO. 607-10
FENCING DETAILS	
EFFECTIVE: FEBRUARY 2005	

serving you with pride — MONTANA DEPARTMENT OF TRANSPORTATION

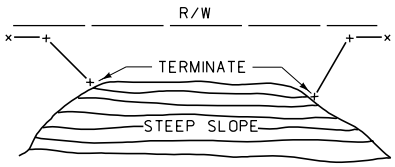

SLOPE MUST BE STEEP ENOUGH TO DETER PASSAGE OF TRESPASSERS.

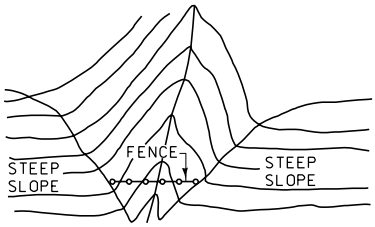

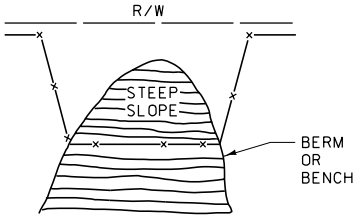

FENCE LAYOUT ON STEEP SLOPES

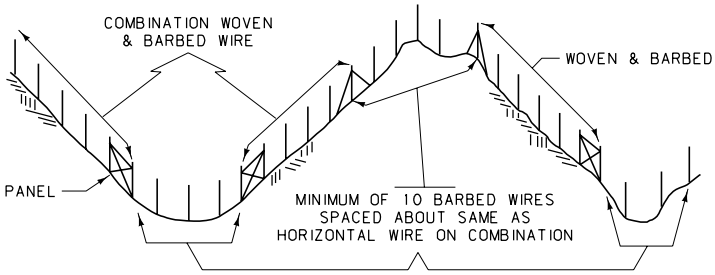

FENCE LAYOUT ON SHARP VERTICAL CURVES

TO AVOID TRYING TO CONFORM WOVEN WIRE TO UNEVEN TERRAIN

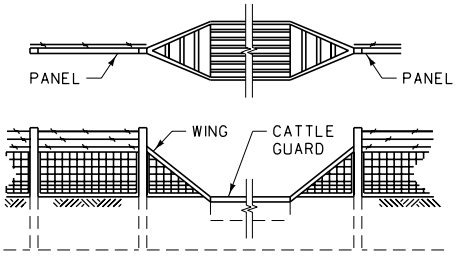

FENCE CONNECTION TO CATTLE GUARD

SECURELY FASTEN FENCE WIRE TO THE WINGS AND ARRANGE SO THAT ANIMALS CANNOT PASS.

* 300 mm OFFSET APPLIES TO INTERSTATE FENCING ONLY.

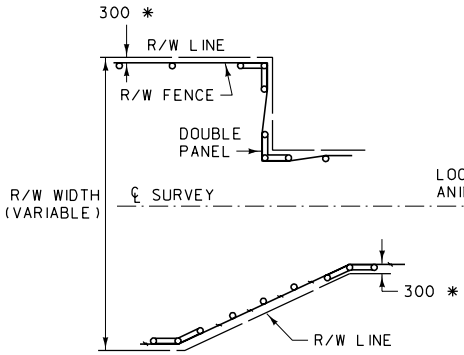

FENCE LAYOUT AT CHANGE IN R/W WIDTH

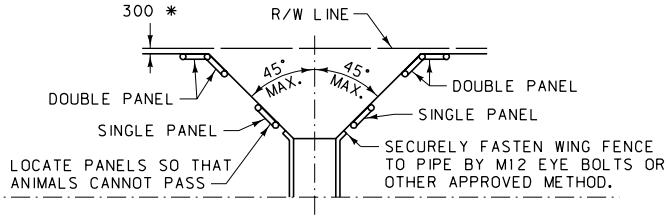

FENCE LAYOUT AT STOCKPASS, BRIDGES AND LARGE PIPES

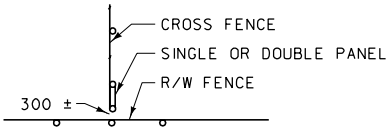

FENCE LAYOUT AT CROSS-FENCE CONNECTION

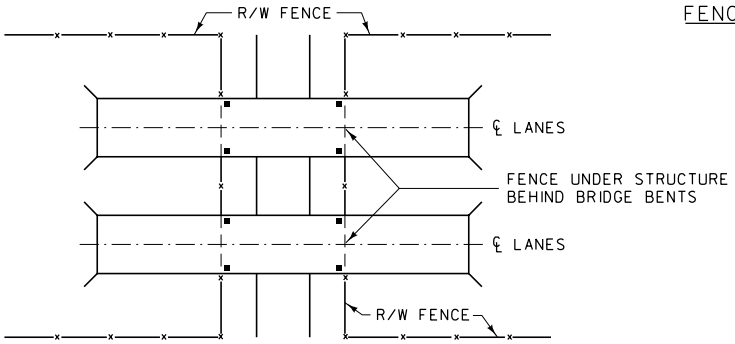

FENCE LAYOUT AT LOCAL ROAD UNDER INTERSTATE

ALL DIMENSIONS ARE MILLIMETERS (mm) UNLESS OTHERWISE NOTED.

DETAILED DRAWING	
REFERENCE STANDARD SPEC. SECTION 607	DWG. NO. 607-15
FENCING DETAILS	
EFFECTIVE: FEBRUARY 2005	

MDT serving you with pride — MONTANA DEPARTMENT OF TRANSPORTATION

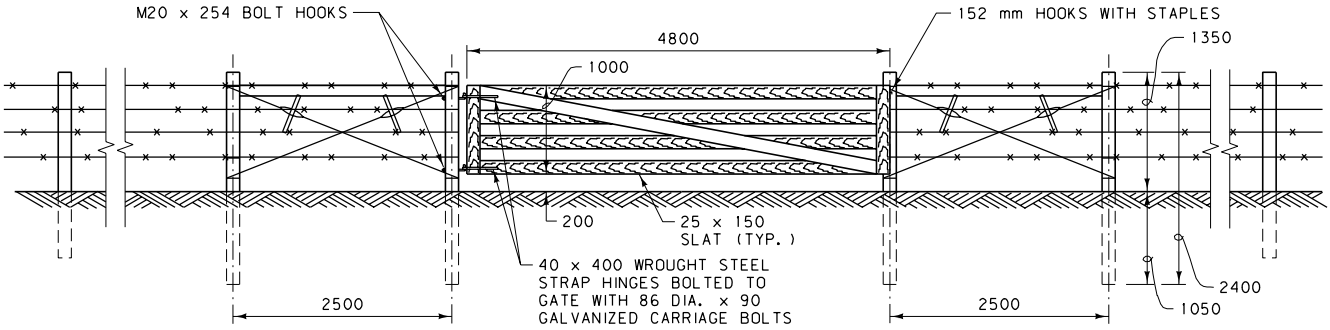

WOOD FARM ENTRANCE GATE (TYPE G-1)

NOTE: USE 10d NAILS AND CLINCH FOR GATE CONSTRUCTION.

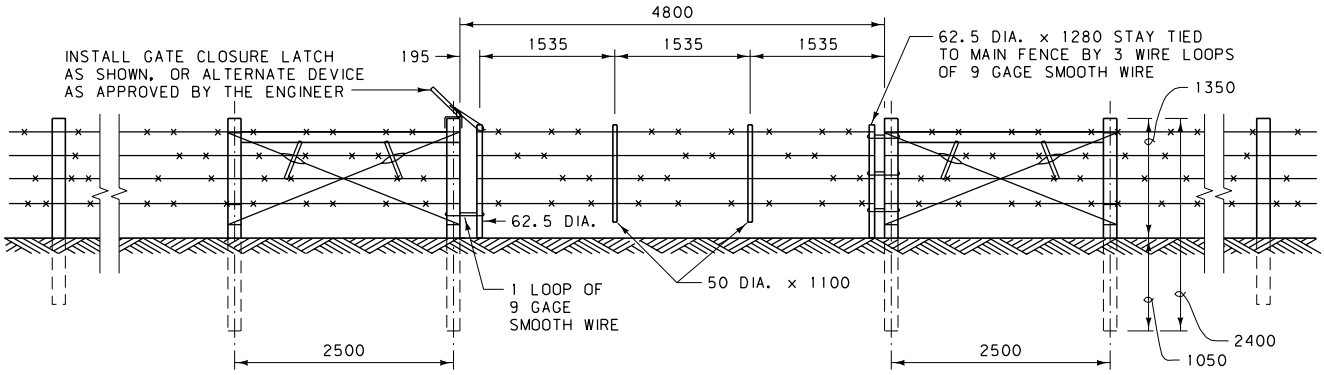

WIRE FARM ENTRANCE GATE (TYPE G-2)

NOTE:
USE SAME WIRE SCHEME ON GATE
AS THAT USED ON FENCE, UNLESS
STATED OTHERWISE IN R/W AGREEMENT.

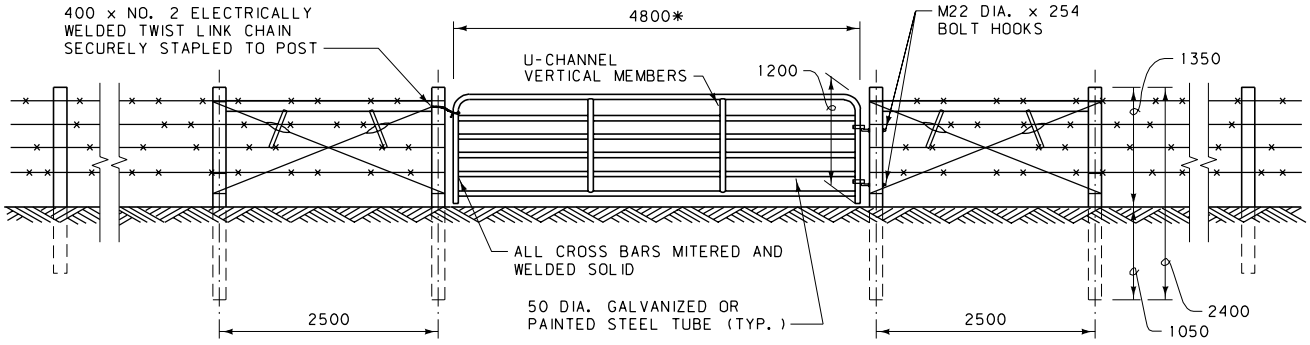

METAL FARM ENTRANCE GATE (TYPE G-3)

NOTES:

ALL GATES ARE 4800 mm WIDE UNLESS R/W AGREEMENT STATES OTHERWISE.

ALL GATES WILL HAVE A SINGLE OR DOUBLE PANEL AT EACH END.

* TYPE G-3 GATES ARE AVAILABLE IN WIDTHS FROM 1.2 m TO 6.0 m IN 0.6 m INCREMENTS.

ALL DIMENSIONS ARE MILLIMETERS (mm) UNLESS OTHERWISE NOTED.

DETAILED DRAWING	
REFERENCE STANDARD SPEC. SECTION 607	DWG. NO. 607-20
FARM ENTRANCE GATES	
EFFECTIVE: FEBRUARY 2005	

serving you with pride — MONTANA DEPARTMENT OF TRANSPORTATION

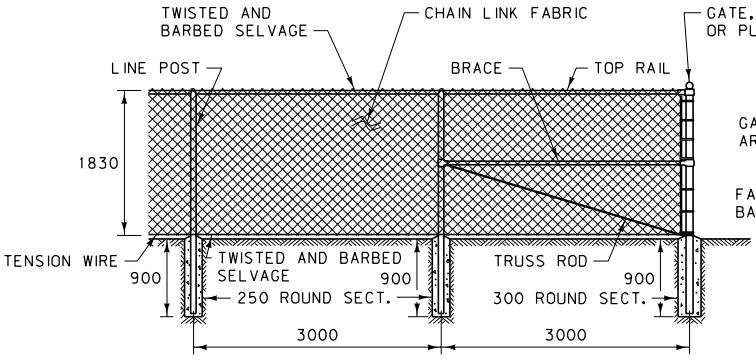

1.8 m CHAIN LINK FENCE

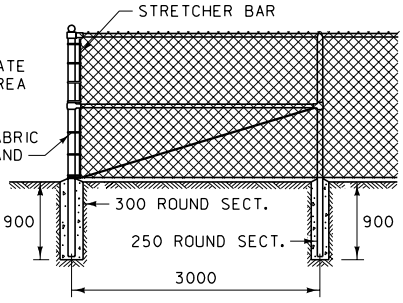

SINGLE PANEL

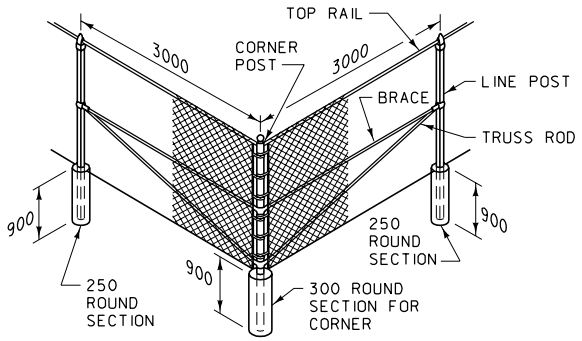

DOUBLE PANEL

PULL POST AND CORNER POST BRACING

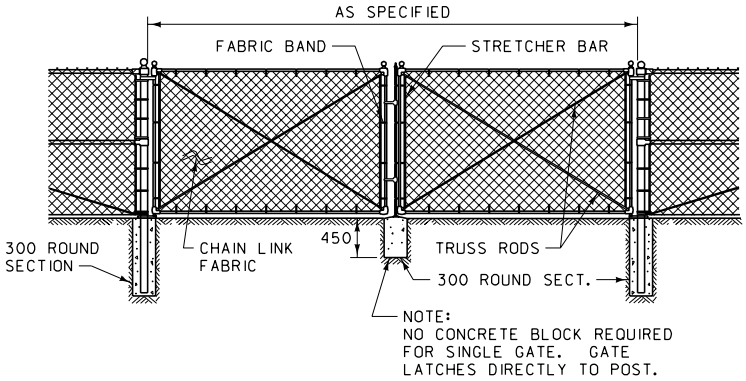

GATES

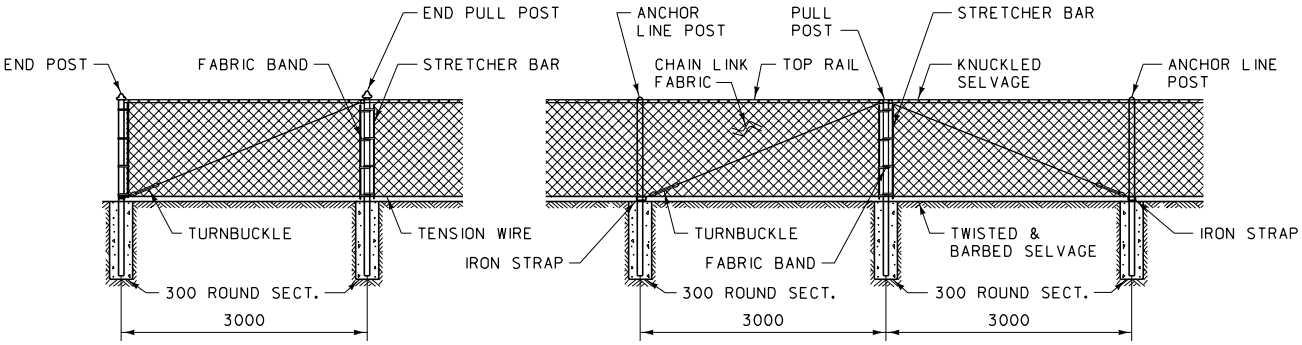

CHAIN LINK FENCE - 0.9 m, 1.2 m AND 1.5 m

NOTES:

SEE THE STANDARD SPECIFICATIONS FOR FURTHER REQUIREMENTS.

DO NOT INSTALL DOUBLE PANELS MORE THAN 90 m APART ON TANGENTS OR MORE THAN 75 m APART ON ANY CURVE. FOR CURVES WITH A RADIUS SHARPER THAN 350 m, INSTALL A DOUBLE PANEL ON EACH CURVE END, PLUS ONE ADDITIONAL PANEL FOR EACH 10° OF DEFLECTION, EVENLY SPACED, BETWEEN THE CURVE ENDS.

PULL POST BRACING ON 1.8 m FENCE IS THE SAME AS CORNER BRACING.

A DROP BAR LOCKING DEVICE IS REQUIRED FOR ALL DOUBLE GATE INSTALLATIONS. THE DROP BAR MUST BE ABLE TO BE INSERTED INTO THE CONCRETE BLOCK AT LEAST 150 mm.

ALL CONCRETE IS CLASS "F" OR BETTER.

WHEN FENCE IS LESS THAN 15 m FROM THE EDGE OF A DRIVING LANE, USE A 9.5 mm DIA. GALVANIZED STEEL CABLE IN PLACE OF THE TOP METAL BRACE RAIL.

HEIGHT OF FABRIC	WIRE FABRIC ABOVE GROUND	DEPTH OF CONCRETE	DEPTH OF POST IN CONC. (MIN.)
1830	25 TO 50	900	800
1525	25 TO 50	900	800
1220	25 TO 50	750	650
915	25 TO 50	750	650

ALL DIMENSIONS ARE MILLIMETERS (mm) UNLESS OTHERWISE NOTED.

DETAILED DRAWING

REFERENCE STANDARD SPEC. SECTION 607

DWG. NO. 607-25

CHAIN LINK FENCE

EFFECTIVE: FEBRUARY 2005

serving you with pride

MONTANA DEPARTMENT OF TRANSPORTATION

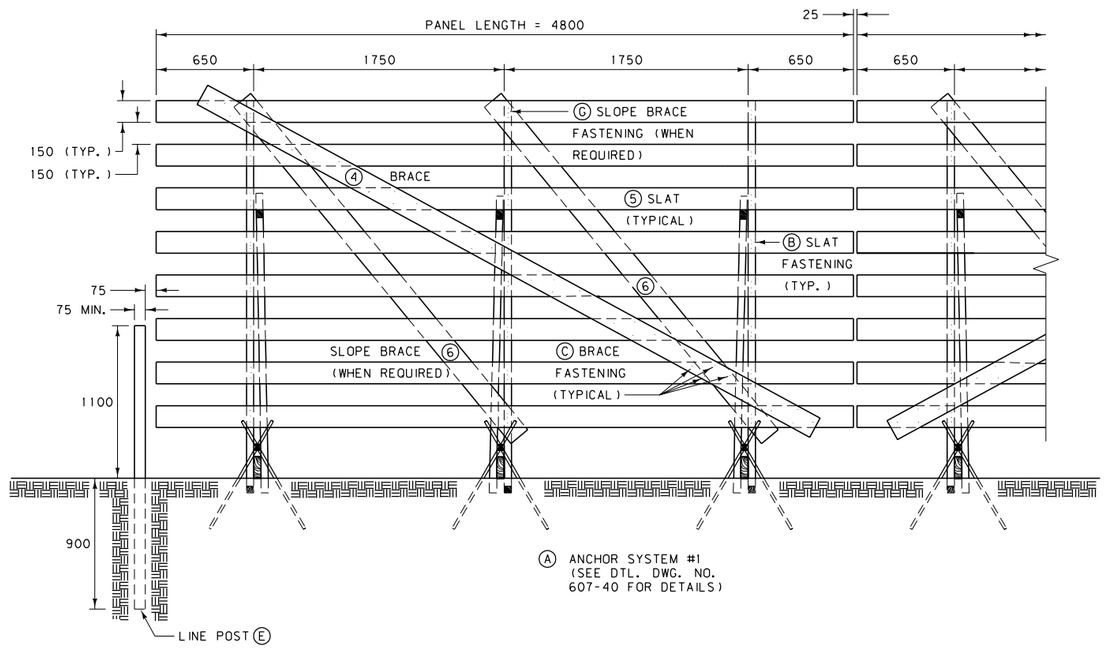

FRONT VIEW

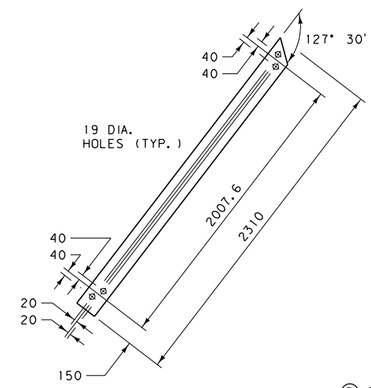

② FRAME

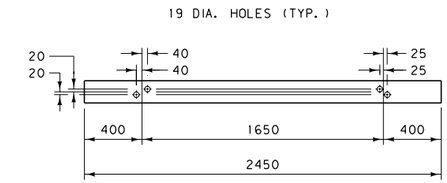

① SILL

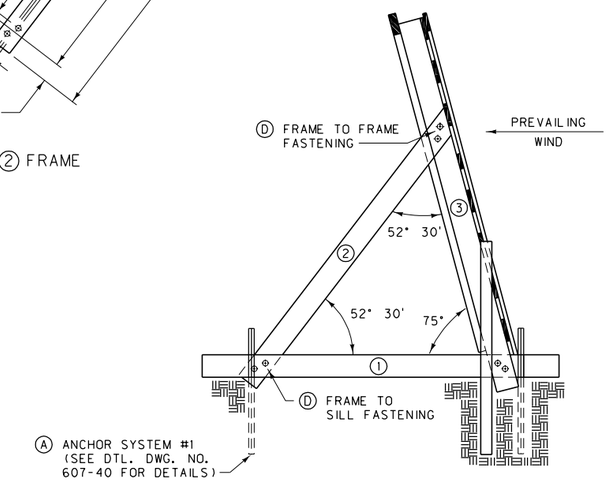

END VIEW

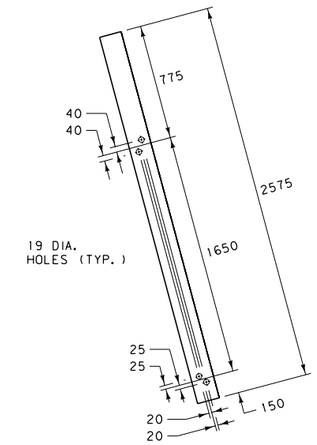

③ FRAME

GENERAL NOTES

Ⓐ ANCHOR SYSTEM DETAIL
USE ANCHOR SYSTEM #1 UNLESS SOIL AND MOISTURE CONDITIONS NECESSITATE THE USE OF AN ALTERNATE SYSTEM, OR AS DIRECTED BY THE ENGINEER. CONSULT DETAILED DRAWING NUMBERS 607-40 AND 607-45 FOR ANCHOR SYSTEMS #3 (ROCKY CONDITIONS) AND #2 (SWAMPY CONDITIONS).

Ⓑ SLAT FASTENING
FASTEN SLATS TO THE FRAME WITH 3 ~ 12d COMMON BARBED SHANK NAILS AT EACH LOCATION.

Ⓒ BRACE FASTENING
FASTEN BRACES TO THE FRAME WITH 4 ~ 8d COMMON NAILS AT EACH LOCATION AND CLINCH.

Ⓓ FRAME TO SILL AND FRAME TO FRAME FASTENING
FASTEN THE SILL AND FRAME MEMBERS TO THE FRAME AT EACH LOCATION WITH 2 ~ M16 x 127 mm STANDARD MACHINE BOLTS, EACH WITH HEX NUT AND TWO FLAT WASHERS. SEE NOTE Ⓧ AT RIGHT.

Ⓔ LINE POSTS
PLACE LINE POSTS AT EACH END OF EACH LINE OF SNOW FENCE AS SHOWN. POSTS ARE 2000 mm LONG WITH A MINIMUM DIAMETER OF 75 mm AND A MAXIMUM DIAMETER OF 150 mm. BUTT TREAT 900 mm MINIMUM.

Ⓕ WIRE TIE
USE 12 GAGE OR HEAVIER GALVANIZED WIRE TO FORM THE WIRE TIES.

Ⓖ SLOPE BRACE FASTENING
FASTEN SLOPE BRACES WITH 3 ~ 16d COMMON BARBED SHANK NAILS AT EACH LOCATION.

LUMBER - 2.4 m SNOW FENCE W/ ANCHOR SYSTEM #1			
BILL OF MATERIALS FOR ONE PANEL			
ITEM NO.	NO. OF PIECES	LUMBER SIZE	DESCRIPTION
①*	3	50 x 150 x 2450	FRAME (SILL)
②*	3	50 x 150 x 2310	FRAME
③*	3	50 x 150 x 2575	FRAME
* NOTE: PRESSURE TREAT ALL 50 x 150 MEMBERS (ENTIRE FRAME)			
④	1	25 x 150 x 4800	BRACE
⑤	8	25 x 150 x 4800	SLAT
⑥**	2	50 x 150 x 3000	SLOPE BRACE
** NOTE: USE ONLY WHEN SLOPE IS 5:1 OR GREATER			

HARDWARE - 2.4 m SNOW FENCE W/ ANCHOR SYSTEM #1		
BILL OF MATERIALS FOR ONE PANEL		
	QUANTITY	DESCRIPTION
Ⓓ	18	M16 x 127 HEX BOLT (THREADED FULL LENGTH) AND NUT
Ⓓ	36	FLAT WASHER FOR M16 BOLT
Ⓑ	0.50 kg	12d COMMON BARBED SHANK NAIL
Ⓐ	12	#19 REBAR x 1500
Ⓕ	6 PIECES	12 GAGE TIE WIRE x 1500 ±
Ⓒ	0.15 kg	8d COMMON NAILS
Ⓖ	0.11 kg	16d COMMON BARBED SHANK NAILS

ALL NAILS MAY BE EITHER HAND DRIVEN OR DRIVEN WITH A PNEUMATIC NAILER.

Ⓧ NOTE:
AFTER M16 BOLTS HAVE BEEN TIGHTENED, BURR THE THREAD DIRECTLY BEHIND THE NUT TO PREVENT EVENTUAL LOOSENING OF THE NUTS.

ALL DIMENSIONS ARE MILLIMETERS (mm) UNLESS OTHERWISE NOTED.

DETAILED DRAWING

REFERENCE STANDARD SPEC. SECTION 607

DWG. NO. 607-30

2.4 m WOOD SNOW FENCE W/ ANCHOR SYSTEM #1

EFFECTIVE: FEBRUARY 2005

MDT serving you with pride — MONTANA DEPARTMENT OF TRANSPORTATION

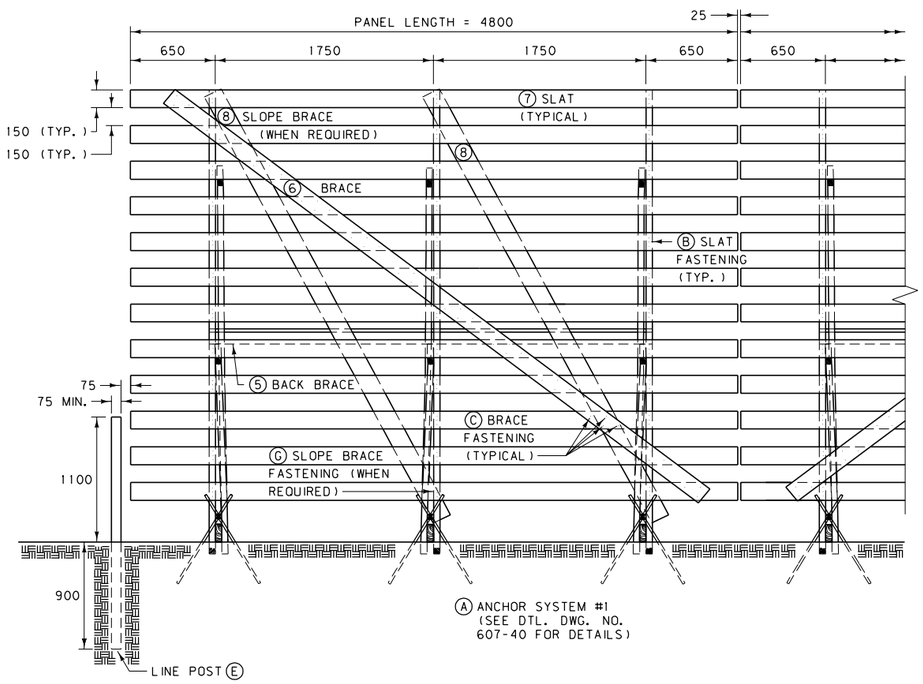

FRONT VIEW

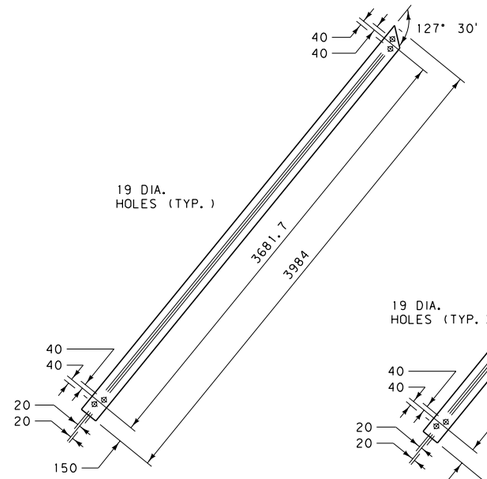

③ FRAME

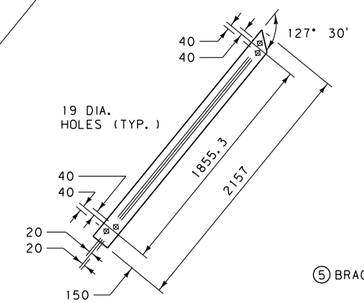

② FRAME

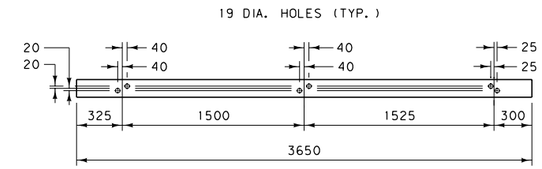

① SILL

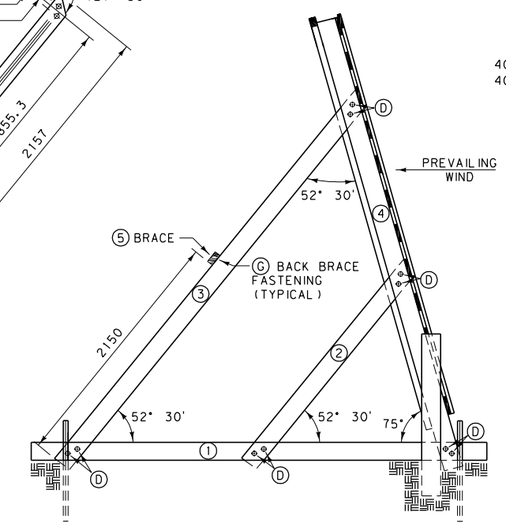

NOTE:
PLACEMENT OF REBAR ANCHORS TIGHT AGAINST SNOW FENCE MEMBERS ① ③ & ④ IS CRITICAL TO PREVENT OVERTURNING AND SLIDING. SEE ANCHOR SYSTEM #1 DETAILS, DTL. DWG. NO. 607-40.

DIG OUT AS REQUIRED FOR ENDS OF MEMBERS ② ③ & ④ AND THE ENTIRE LENGTH OF SILL ① TO ASSURE FULL BEARING OF SILL AGAINST TERRAIN.

END VIEW

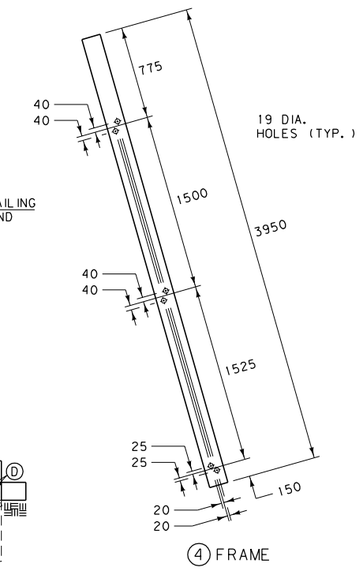

④ FRAME

GENERAL NOTES

Ⓐ ANCHOR SYSTEM DETAIL
USE ANCHOR SYSTEM #1 UNLESS SOIL AND MOISTURE CONDITIONS NECESSITATE THE USE OF AN ALTERNATE SYSTEM, OR AS DIRECTED BY THE ENGINEER. CONSULT DETAILED DRAWING NUMBERS 607-40 AND 607-45 FOR ANCHOR SYSTEMS #3 (ROCKY CONDITIONS) AND #2 (SWAMPY CONDITIONS).

Ⓑ SLAT FASTENING
FASTEN SLATS TO THE FRAME WITH 3 ~ 12d COMMON BARBED SHANK NAILS AT EACH LOCATION.

Ⓒ BRACE FASTENING
FASTEN BRACES TO THE FRAME WITH 4 ~ 8d COMMON NAILS AT EACH LOCATION AND CLINCH.

Ⓓ FRAME TO SILL AND FRAME TO FRAME FASTENING
FASTEN THE SILL AND FRAME MEMBERS TO THE FRAME AT EACH LOCATION WITH 2 ~ M16 x 127 mm STANDARD MACHINE BOLTS, EACH WITH HEX NUT AND TWO FLAT WASHERS. SEE NOTE Ⓧ AT RIGHT.

Ⓔ LINE POSTS
PLACE LINE POSTS AT EACH END OF EACH LINE OF SNOW FENCE AS SHOWN. POSTS ARE 2000 mm LONG WITH A MINIMUM DIAMETER OF 75 mm AND A MAXIMUM DIAMETER OF 150 mm. BUTT TREAT 900 mm MINIMUM.

Ⓕ WIRE TIE
USE 12 GAGE OR HEAVIER GALVANIZED WIRE TO FORM THE WIRE TIES.

Ⓖ BACK & SLOPE BRACE FASTENING
FASTEN BACK BRACES TO THE FRAME WITH 2 ~ 16d NAILS, AND FASTEN THE SLOPE BRACES WITH 3 ~ 16d BARBED SHANK NAILS AT EACH LOCATION.

LUMBER - 3.6 m SNOW FENCE W/ ANCHOR SYSTEM #1			
BILL OF MATERIALS FOR ONE PANEL			
ITEM NO.	NO. OF PIECES	LUMBER SIZE	DESCRIPTION
①*	3	50 x 150 x 3650	SILL
②*	3	50 x 150 x 2157	FRAME
③*	3	50 x 150 x 3984	FRAME
④*	3	50 x 150 x 3950	FRAME
* NOTE: PRESSURE TREAT ALL 50 x 150 MEMBERS (ENTIRE FRAME)			
⑤	1	50 x 100 x 3650	BACK BRACE
⑥	1	25 x 150 x 5400	BRACE
⑦	12	25 x 150 x 4800	SLAT
⑧**	2	50 x 150 x 4000	SLOPE BRACE
** NOTE: USE ONLY WHEN SLOPE IS 5:1 OR GREATER			

	HARDWARE - 3.6 m SNOW FENCE W/ ANCHOR SYSTEM #1	
	BILL OF MATERIALS FOR ONE PANEL	
	QUANTITY	DESCRIPTION
Ⓓ	30	M16 x 127 HEX BOLT (THREADED FULL LENGTH) AND NUT
Ⓓ	60	FLAT WASHER FOR M16 BOLT
Ⓒ	0.23 kg	8d COMMON NAILS
Ⓑ	0.76 kg	12d COMMON BARBED SHANK NAILS
Ⓖ	0.23 kg	16d COMMON BARBED SHANK NAILS
Ⓐ	12	#19 REBAR x 1500
Ⓕ	6 PIECES	12 GAGE TIE WIRE x 1500 ±

ALL NAILS MAY BE EITHER HAND DRIVEN OR DRIVEN WITH A PNEUMATIC NAILER.

Ⓧ NOTE:
AFTER M16 BOLTS HAVE BEEN TIGHTENED, BURR THE THREAD DIRECTLY BEHIND THE NUT TO PREVENT EVENTUAL LOOSENING OF THE NUTS.

ALL DIMENSIONS ARE MILLIMETERS (mm) UNLESS OTHERWISE NOTED.

DETAILED DRAWING

REFERENCE
STANDARD SPEC.
SECTION 607

DWG. NO.
607-35

3.6 m WOOD SNOW FENCE
W/ ANCHOR SYSTEM #1

EFFECTIVE: FEBRUARY 2005

serving you with pride

MONTANA DEPARTMENT OF TRANSPORTATION

ANCHOR SYSTEM #3
(FOR ROCKY CONDITIONS)

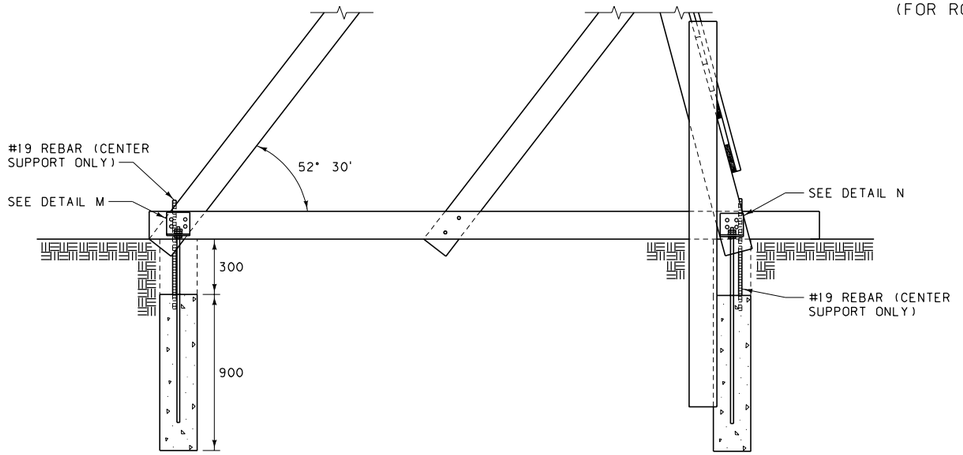

LEFT END VIEW

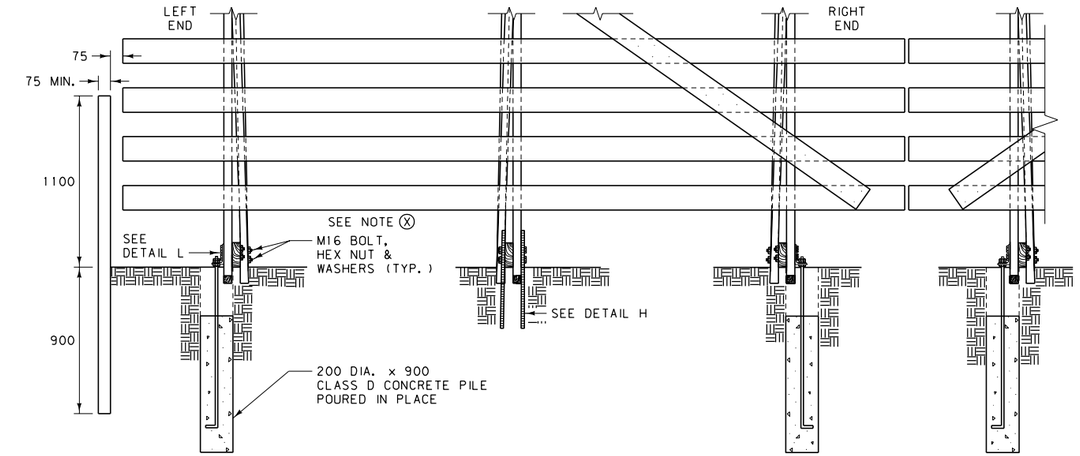

FRONT VIEW

NOTE:
HOLES SHOWN IN DETAILS BELOW ARE FOR LEFT END OF FENCE.
HOLES SHOWN HIDDEN ARE FOR RIGHT END OF FENCE.

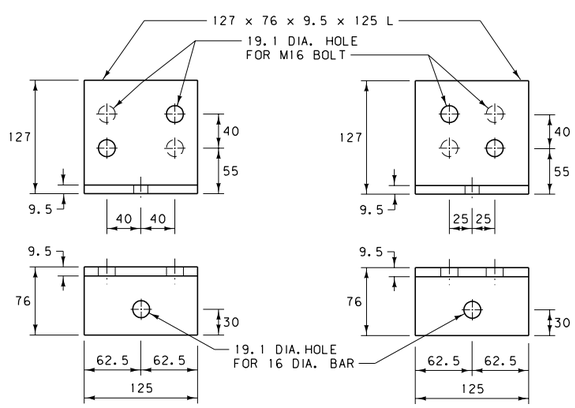

DETAIL M DETAIL N

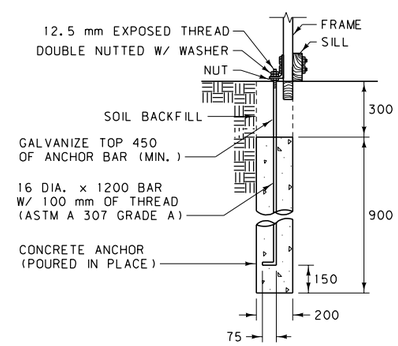

DETAIL L

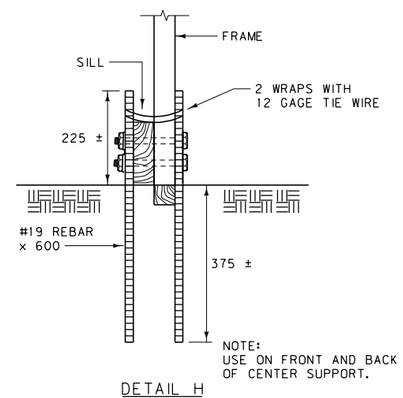

DETAIL H

LUMBER - SNOW FENCE W/ ANCHOR SYSTEM #3
BILL OF MATERIALS FOR ONE PANEL
SAME AS FOR SNOW FENCE W/ ANCHOR SYSTEM #1

HARDWARE - SNOW FENCE W/ ANCHOR SYSTEM #3	
BILL OF MATERIALS FOR ONE PANEL	
QUANTITY	DESCRIPTION
4	127 x 76 x 9.5 x 127.0 L
4	16 DIA. x 1200 BAR W/ 3 HEX NUTS
4	FLAT WASHERS FOR 16 DIA. BAR
0.113 m³	CLASS D CONCRETE
4	#19 REBAR x 600
4 PIECES	12 GAGE TIE WIRE x 600 ±
30	M16 x 127 HEX BOLT (THREADED FULL LENGTH) AND NUT
60	FLAT WASHERS FOR M16 BOLT
NOTE: NAILS REQUIRED ARE SAME AS SHOWN ON HARDWARE SUMMARY FOR SNOW FENCE W/ ANCHOR SYSTEM #1	

SEE NOTE Ⓧ BELOW

Ⓧ NOTE:
AFTER M16 BOLTS HAVE BEEN TIGHTENED, BURR THE THREAD DIRECTLY BEHIND THE NUT TO PREVENT EVENTUAL LOOSENING OF THE NUTS.

ANCHOR SYSTEM #1
(STANDARD)

STEP ①

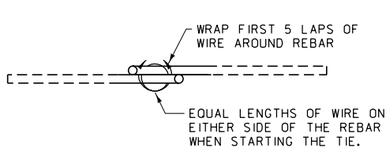

TOP

STEP ②

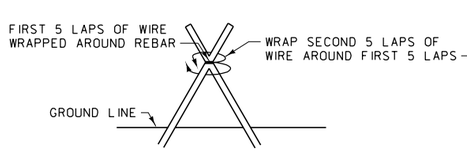

FRONT

STEP ③

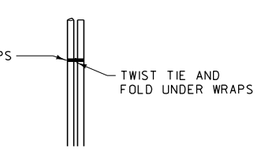

SIDE

WIRE TIE DETAIL
USE 12 GAGE OR HEAVIER GALVANIZED WIRE TO FORM THE WIRE TIES.

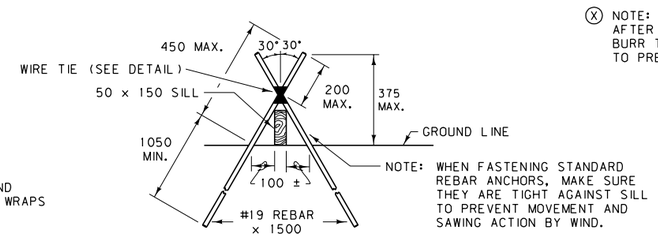

USE TWO #19 REINFORCING BARS FOR EACH END OF EACH SILL MEMBER. DRIVE THE BARS UP TIGHT TO THE FRAME TO PREVENT SLIDING. TIE THE REINFORCING BARS AS SHOWN IN THE WIRE TIE DETAIL. THE PLACEMENT OF THE ANCHORS IS CRITICAL IN PREVENTING OVERTURNING AND SLIDING OF THE FENCE.

STANDARD ANCHOR DETAIL

ALL DIMENSIONS ARE MILLIMETERS (mm) UNLESS OTHERWISE NOTED.

DETAILED DRAWING	
REFERENCE STANDARD SPEC. SECTION 607	DWG. NO. 607-40
WOOD SNOW FENCE ANCHOR SYSTEM #3 AND #1 DETAILS	
EFFECTIVE: FEBRUARY 2005	
serving you with pride	MONTANA DEPARTMENT OF TRANSPORTATION

ANCHOR SYSTEM #2
(FOR SWAMPY CONDITIONS)

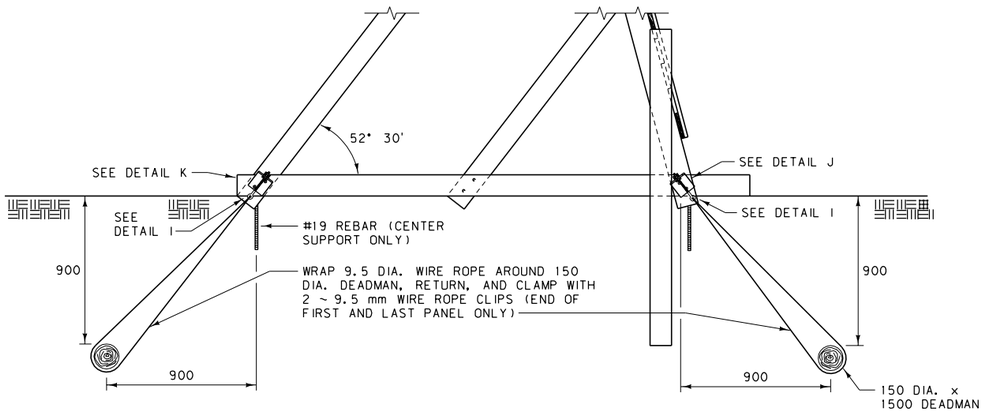

LEFT END VIEW

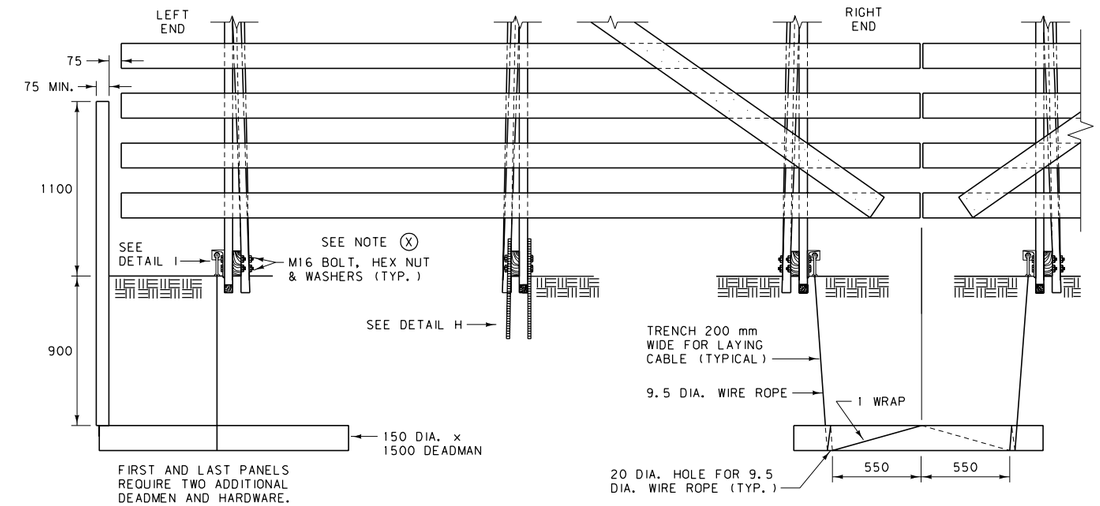

FRONT VIEW

NOTE:
HOLES SHOWN IN DETAILS BELOW ARE FOR LEFT END OF FENCE.
HOLES SHOWN HIDDEN ARE FOR RIGHT END OF FENCE.

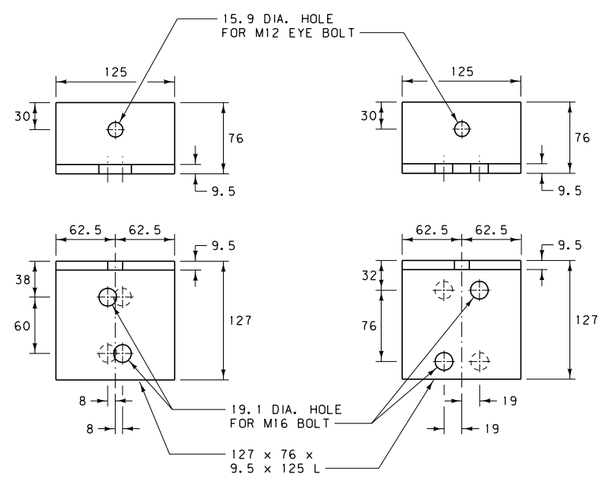

DETAIL J

DETAIL K

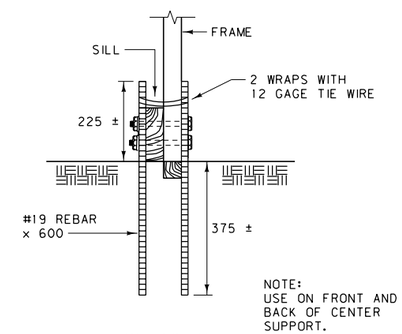

DETAIL H

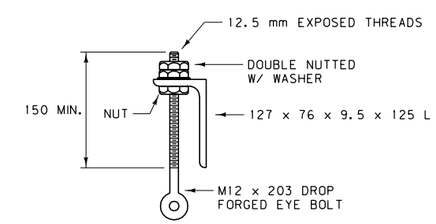

DETAIL I

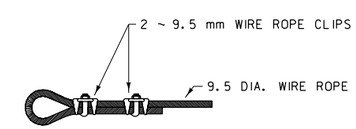

WIRE ROPE CONNECTION

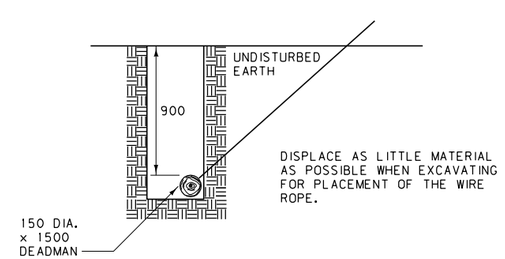

DEADMAN DETAIL

LUMBER - SNOW FENCE W/ ANCHOR SYSTEM #2
BILL OF MATERIALS FOR ONE PANEL
SAME AS FOR SNOW FENCE W/ ANCHOR SYSTEM #1

HARDWARE - SNOW FENCE W/ ANCHOR SYSTEM #2	
BILL OF MATERIALS FOR ONE PANEL	
QUANTITY	DESCRIPTION
4	127 x 76 x 9.5 x 127.0 L
8	9.5 mm WIRE CLAMPS
4	M12 DROP FORGED EYEBOLTS W/ 3 HEX NUTS
4	FLAT WASHERS FOR M12 EYEBOLTS
4	#19 REBAR x 600
4 PIECES	12 GAGE TIE WIRE x 600 ±
8500 mm	9.5 DIA. WIRE ROPE
2	150 DIA. x 1500 POST DEADMEN
30	M16 x 127 HEX BOLT (THREADED FULL LENGTH) AND NUT
60	FLAT WASHERS FOR M16 BOLT
NOTE: NAILS REQUIRED ARE SAME AS SHOWN ON HARDWARE SUMMARY FOR SNOW FENCE W/ ANCHOR SYSTEM #1	

X NOTE:
AFTER M16 BOLTS HAVE BEEN TIGHTENED, BURR THE THREAD DIRECTLY BEHIND THE NUT TO PREVENT EVENTUAL LOOSENING OF THE NUTS.

ALL DIMENSIONS ARE MILLIMETERS (mm) UNLESS OTHERWISE NOTED.

DETAILED DRAWING

REFERENCE STANDARD SPEC. SECTION 607

DWG. NO. 607-45

WOOD SNOW FENCE ANCHOR SYSTEM #2 DETAILS

EFFECTIVE: FEBRUARY 2005

MDT serving you with pride — MONTANA DEPARTMENT OF TRANSPORTATION

NOTES:

13 mm EXPANSION JOINTS ARE SHOWN AS DARK SOLID LINES FOR VISUAL PURPOSES.

BOND BREAKER IS SHOWN AS DARK DASHED LINES FOR VISUAL PURPOSES.

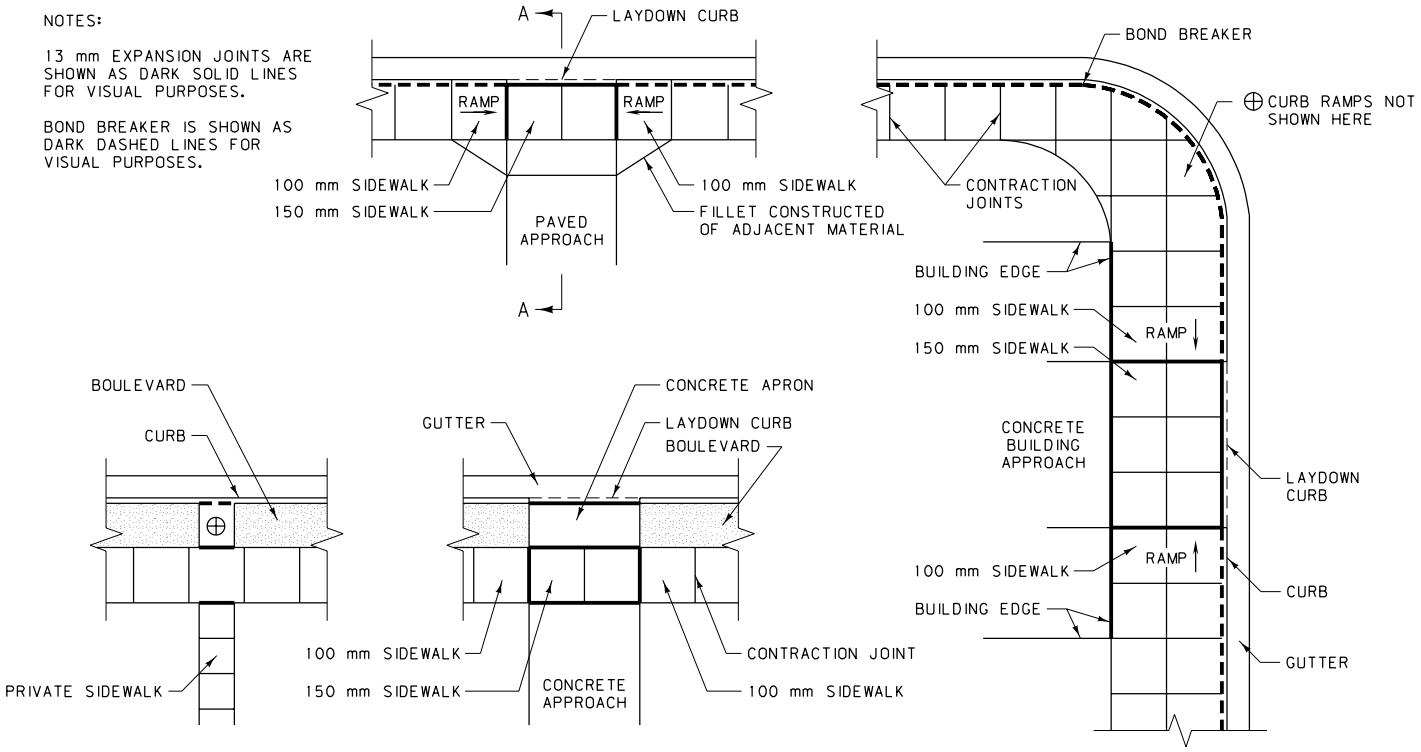

PLAN

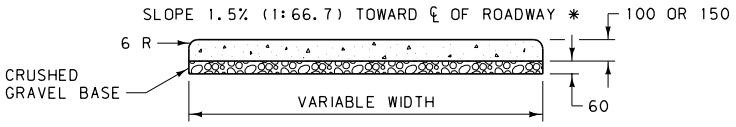

SECTION OF SIDEWALK

NOTE:
SEE DTL. DWG. NO. 609-05 FOR CURB & GUTTER DETAILS.

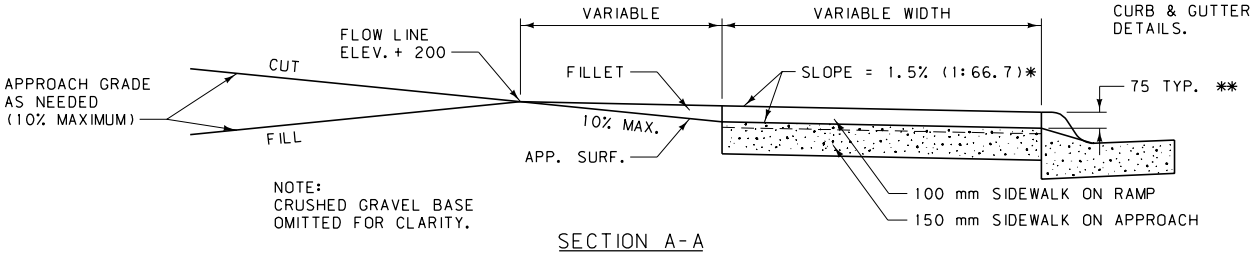

NOTE:
CRUSHED GRAVEL BASE OMITTED FOR CLARITY.

SECTION A-A

NOTES:

INSTALL PREFORMED EXPANSION JOINT FILLER, STD. SPEC. 707.01.3, AT ALL EXPANSION JOINTS, FOR THE FULL THICKNESS OF THE SIDEWALK AND USE AT ALL JOINTS BETWEEN NEW CONCRETE SIDEWALK AND STRUCTURES IN PLACE.

INSTALL A BOND BREAKER FOR THE FULL THICKNESS OF THE SIDEWALK AT LOCATIONS SPECIFIED ON THIS DETAIL. USE A 6.8 OR 13.6 KILOGRAM ROOFING FELT MATERIAL, OR OTHER PRODUCT AS APPROVED BY THE ENGINEER, FOR THE BOND BREAKER. DO NOT USE EXPANSION JOINT MATERIAL AS A BOND BREAKER.

ALL JOINTS MUST BE STRAIGHT AND PERPENDICULAR TO THE CENTERLINE AND THE SURFACE OF THE SIDEWALK. WHERE PRACTICAL, ALIGN ALL JOINTS WITH LIKE JOINTS IN ADJOINING WORK. USE JOINTS TO OUTLINE ALL PANELS IN THE SIDEWALK, WHICH ARE TO BE, SO FAR AS POSSIBLE, SQUARE. THE LENGTHS OF THE PANELS ARE DETERMINED BY THE WIDTH OF THE SIDEWALK.

WHERE RIGHT-OF-WAY PERMITS, NEW SIDEWALKS LESS THAN 1525 mm IN WIDTH MUST HAVE A PASSING AREA AT A MAXIMUM SPACING OF 61 m. THE PASSING AREA IS A MINIMUM OF 1525 mm BY 1525 mm IN SIZE.

CONTRACTION JOINTS MAY NOT BE MORE THAN 3 mm WIDE AND NOT LESS THAN 25 mm IN DEPTH AND MAY BE CUT BY A GROOVE FORMING TOOL.

LOCATE EXPANSION JOINTS EVERY 30 METERS (± 10 METERS) AT INTERVALS EQUAL TO THE NEAREST MULTIPLE OF THE CONTRACTION JOINT INTERVAL.

USE A LONGITUDINAL CONTRACTION JOINT IN THE CENTERLINE OF ALL SIDEWALKS WIDER THAN 1525 mm.

✱ THE MAXIMUM CROSS SLOPE OF THE SIDEWALK IS 2% (1:50).

✱✱ THIS DEPTH IS STANDARD IN NEW CONSTRUCTION. ALTERATIONS TO EXISTING FACILITIES MAY RESULT IN A LARGER DEPTH, WHICH WILL REQUIRE A GREATER RAMP LENGTH.

⊕ SEE DTL. DWG. NO. 608-15 AND 608-20 FOR GUIDELINES ON RAMP DESIGN WHEN RAMPS ARE REQUIRED FOR ADA ACCESSIBILITY.

ALL DIMENSIONS ARE MILLIMETERS (mm) UNLESS OTHERWISE NOTED.

DETAILED DRAWING	
REFERENCE STANDARD SPEC. SECTION 608	DWG. NO. 608-05
CONCRETE SIDEWALK	
EFFECTIVE: FEBRUARY 2005	

MDT serving you with pride — MONTANA DEPARTMENT OF TRANSPORTATION

CURB RAMP TYPES

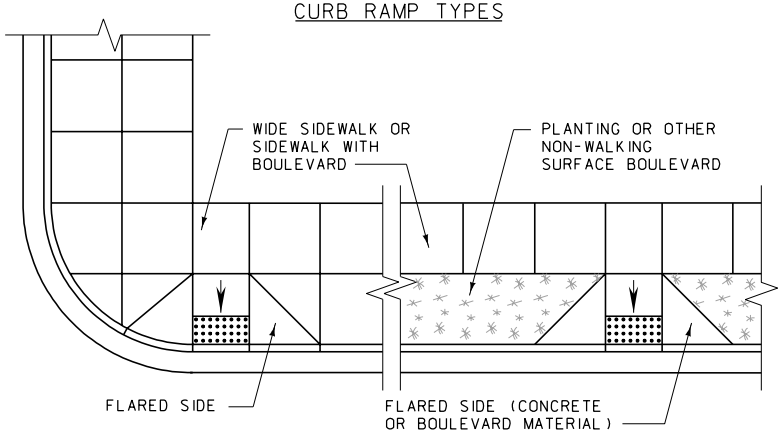

(A)

PERPENDICULAR PUBLIC SIDEWALK CURB RAMP (SEE DETAILED DRAWING NUMBER 608-25 FOR ADDITIONAL DETAILS)

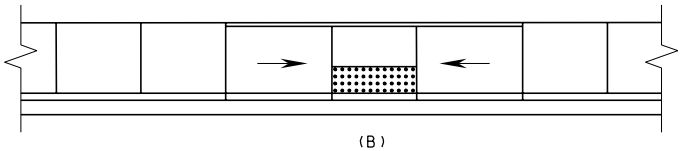

(B)

PARALLEL PUBLIC SIDEWALK CURB RAMP (SEE DETAILED DRAWING NUMBER 608-30 FOR ADDITIONAL DETAILS)

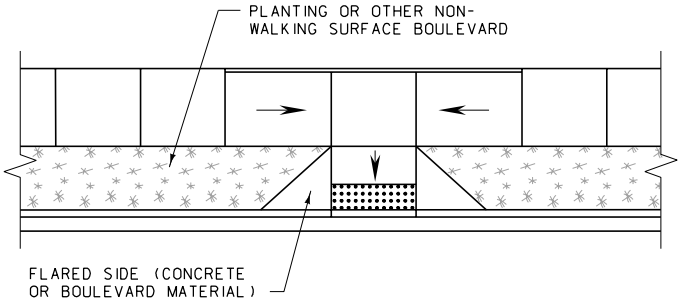

(C)

COMBINED (PARALLEL/PERPENDICULAR) PUBLIC SIDEWALK CURB RAMP (SEE DETAILED DRAWING NUMBERS 608-25 AND 608-30 FOR ADDITIONAL DETAILS)

GENERAL NOTES:

1. IN NEW CONSTRUCTION, USE PUBLIC SIDEWALK CURB RAMPS IN THE FOLLOWING ORDER OF PREFERENCE:

   A. PERPENDICULAR PUBLIC SIDEWALK CURB RAMP.
   B. PARALLEL PUBLIC SIDEWALK CURB RAMP.
   C. COMBINED (PARALLEL/PERPENDICULAR) PUBLIC SIDEWALK CURB RAMP.
   D. DIAGONAL PERPENDICULAR PUBLIC SIDEWALK CURB RAMP.

   SINGLE DIAGONAL OR DEPRESSED CORNER PUBLIC SIDEWALK CURB RAMPS SERVING TWO STREET CROSSING DIRECTIONS ARE NOT PERMITTED IN NEW CONSTRUCTION.

2. WHEN ALTERING EXISTING FACILITIES, MEET NEW CONSTRUCTION REQUIREMENTS FOR PUBLIC SIDEWALK CURB RAMPS TO THE MAXIMUM EXTENT FEASIBLE.

3. IF POSSIBLE, DO NOT PLACE DRAINAGE STRUCTURES IN CONFLICT WITH PUBLIC SIDEWALK CURB RAMPS. LOCATION OF CURB RAMPS TAKES PRECEDENCE OVER LOCATION OF DRAINAGE STRUCTURES EXCEPT WHERE EXISTING DRAINAGE STRUCTURES ARE BEING UTILIZED.

4. USE THE FLATTEST SLOPES POSSIBLE FOR ALL CURB RAMPS. MAXIMUM SLOPES ARE SHOWN FOR GUIDANCE AT DIFFICULT SITES.

5. FINAL FIELD LOCATION OF THE CURB RAMPS WILL BE DETERMINED BY THE ENGINEER.

6. IF R/W DOES NOT PERMIT LANDINGS FOR THESE RAMPS, USE ANOTHER RAMP DESIGN.

7. PEDESTRIAN ACCESS POINTS AT CROSSWALKS ARE TO BE WHOLLY CONTAINED WITHIN THE CROSSWALK LINES.

8. FOR ADDITIONAL INFORMATION CONSULT:

   APPENDIX IV
   AMERICANS WITH DISABILITIES ACT (ADA)
   ACCESSIBILITY GUIDELINES FOR BUILDINGS AND FACILITIES
   AUGUST 1994 EDITION

CONSTRUCTION REQUIREMENTS:

1. OBTAIN A SURFACE TEXTURE ON THE RAMP BY COARSE BROOMING, TRANSVERSE TO THE RAMP SLOPE.

2. TAKE CARE DURING CONSTRUCTION TO ASSURE UNIFORM RAMP GRADES, FREE OF SAGS AND SHARP GRADE CHANGES.

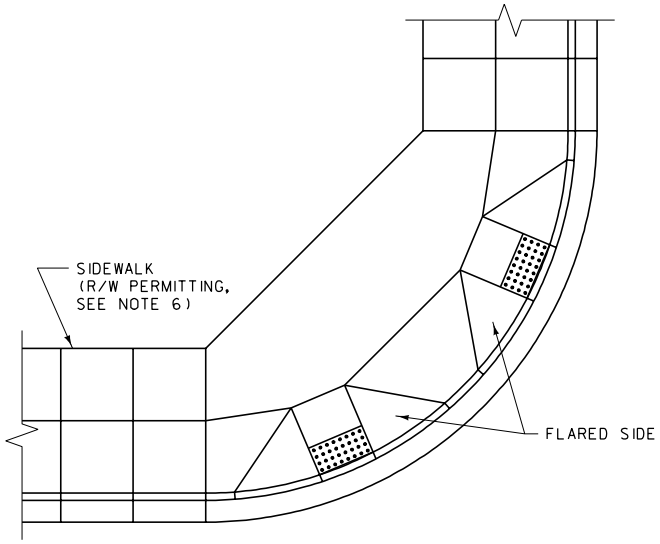

(D)

DIAGONAL PERPENDICULAR PUBLIC SIDEWALK CURB RAMP (SEE DETAILED DRAWING NUMBER 608-35 FOR ADDITIONAL DETAILS)

ALL DIMENSIONS ARE MILLIMETERS (mm) UNLESS OTHERWISE NOTED.

DETAILED DRAWING	
REFERENCE STANDARD SPEC. SECTION 608	DWG. NO. 608-15
NEW CONSTRUCTION PUBLIC SIDEWALK CURB RAMPS	
EFFECTIVE: FEBRUARY 2005	

MDT serving you with pride — MONTANA DEPARTMENT OF TRANSPORTATION

CURB RAMP TYPES

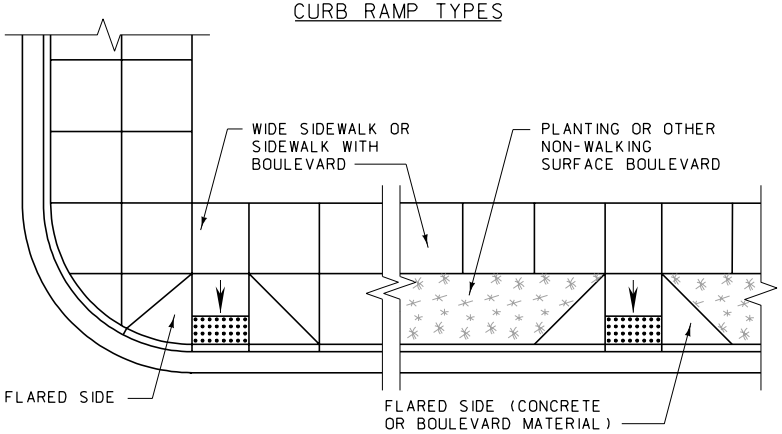

(A)

PERPENDICULAR PUBLIC SIDEWALK CURB RAMP (SEE DETAILED DRAWING NUMBER 608-25 FOR ADDITIONAL DETAILS)

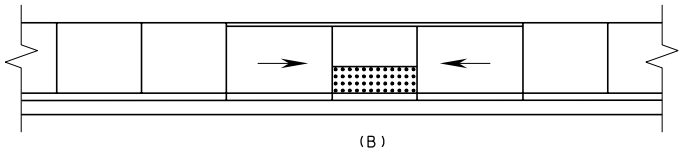

(B)

PARALLEL PUBLIC SIDEWALK CURB RAMP (SEE DETAILED DRAWING NUMBER 608-30 FOR ADDITIONAL DETAILS)

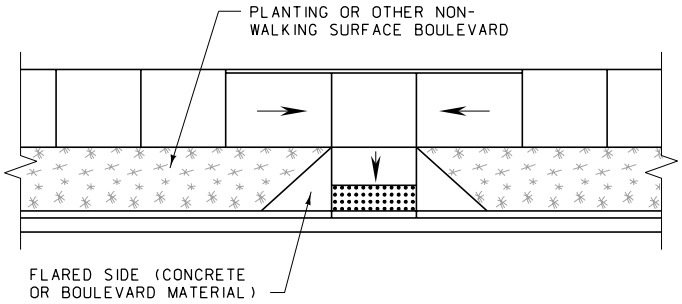

(C)

COMBINED (PARALLEL/PERPENDICULAR) PUBLIC SIDEWALK CURB RAMP (SEE DETAILED DRAWING NUMBERS 608-25 AND 608-30 FOR ADDITIONAL DETAILS)

CURB RAMP TYPES

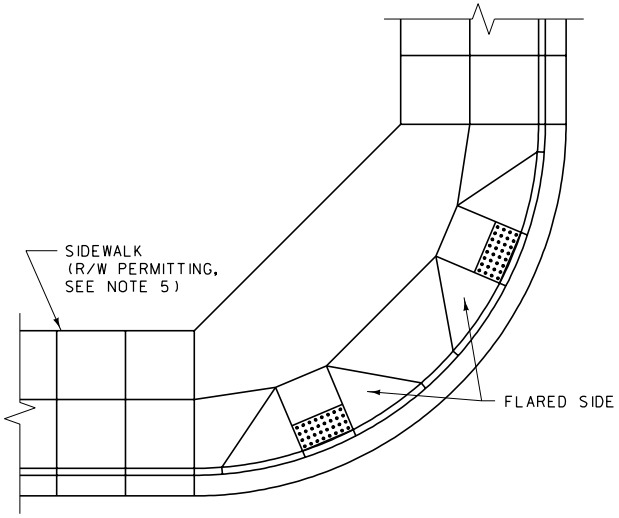

(D)

DIAGONAL PERPENDICULAR PUBLIC SIDEWALK CURB RAMP (SEE DETAILED DRAWING NUMBER 608-35 FOR ADDITIONAL DETAILS)

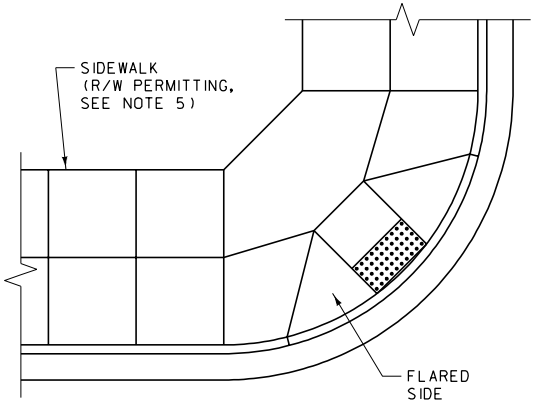

(E)

SINGLE DIAGONAL PERPENDICULAR PUBLIC SIDEWALK CURB RAMP (SEE DETAILED DRAWING NUMBER 608-35 FOR ADDITIONAL DETAILS)

GENERAL NOTES:

1. WHEN ALTERING EXISTING FACILITIES, USE PUBLIC SIDEWALK CURB RAMPS IN THE FOLLOWING ORDER OF PREFERENCE:

   A. PERPENDICULAR PUBLIC SIDEWALK CURB RAMP
   B. PARALLEL PUBLIC SIDEWALK CURB RAMP
   C. COMBINED (PARALLEL/PERPENDICULAR) PUBLIC SIDEWALK CURB RAMP
   D. DIAGONAL PERPENDICULAR PUBLIC SIDEWALK CURB RAMP
   E. SINGLE DIAGONAL PERPENDICULAR PUBLIC SIDEWALK CURB RAMP

   NOTE: USE DIAGONAL PUBLIC SIDEWALK CURB RAMPS AS THE LAST OPTION AND CONSTRUCT TO COMPLY WITH ALL ADA SLOPE AND CONSTRUCTION CRITERIA TO THE GREATEST EXTENT POSSIBLE.

2. PLACE CURB RAMPS TO AVOID EXISTING DRAINAGE STRUCTURES AND OTHER OBSTRUCTIONS TO THE GREATEST EXTENT POSSIBLE.

3. USE THE FLATTEST SLOPES POSSIBLE FOR ALL CURB RAMPS. MAXIMUM SLOPES ARE SHOWN FOR GUIDANCE AT DIFFICULT SITES AND SHOULD BE AVOIDED IF POSSIBLE.

4. FINAL FIELD LOCATION OF THE CURB RAMPS WILL BE DETERMINED BY THE ENGINEER.

5. IF R/W DOES NOT PERMIT LANDINGS FOR THESE RAMPS, USE ANOTHER RAMP DESIGN.

6. PEDESTRIAN ACCESS POINTS AT CROSSWALKS ARE TO BE WHOLLY CONTAINED WITHIN THE CROSSWALK LINES.

7. FOR ADDITIONAL INFORMATION CONSULT:

   APPENDIX IV
   AMERICANS WITH DISABILITIES ACT (ADA)
   ACCESSIBILITY GUIDELINES FOR BUILDINGS AND FACILITIES
   AUGUST, 1994 EDITION

CONSTRUCTION REQUIREMENTS:

1. OBTAIN A SURFACE TEXTURE ON THE RAMP BY COARSE BROOMING, TRANSVERSE TO THE RAMP SLOPE.

2. TAKE CARE DURING CONSTRUCTION TO ASSURE UNIFORM RAMP GRADES, FREE OF SAGS AND SHARP GRADE CHANGES.

ALL DIMENSIONS ARE MILLIMETERS (mm) UNLESS OTHERWISE NOTED.

DETAILED DRAWING	
REFERENCE STANDARD SPEC. SECTION 608	DWG. NO. 608-20
ALTERATIONS TO EXISTING FACILITIES - PUBLIC SIDEWALK CURB RAMPS	
EFFECTIVE: FEBRUARY 2005	

MDT serving you with pride — MONTANA DEPARTMENT OF TRANSPORTATION

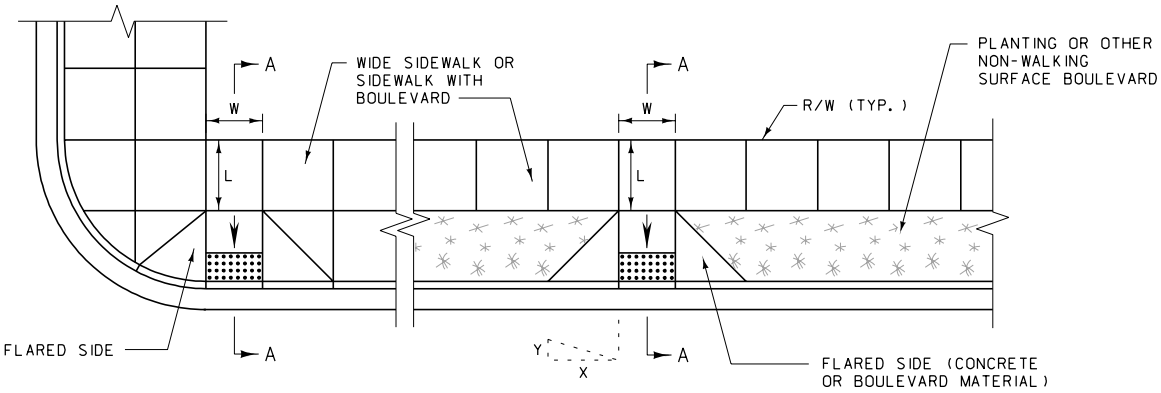

PERPENDICULAR PUBLIC SIDEWALK CURB RAMP

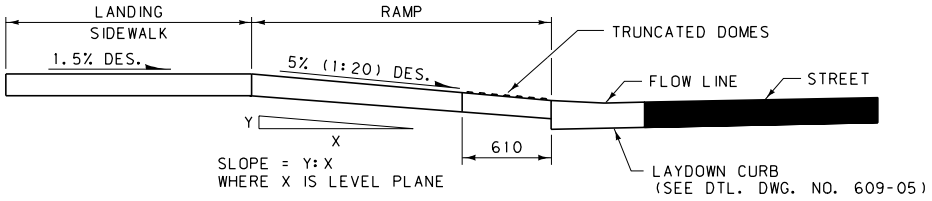

SECTION A-A

NEW CONSTRUCTION REQUIREMENTS:

1. THE DESIRABLE WIDTH OF THE CURB RAMP (DIMENSION "W" ABOVE) IS 1220 mm OR WIDER. THE MINIMUM WIDTH ("W") IS 915 mm.
2. THE DESIRABLE LENGTH OF THE LANDING AT THE TOP OF THE CURB RAMP (DIMENSION "L" ABOVE) IS 1525 mm. THE MINIMUM LENGTH "L" IS 1220 mm. THE LANDING WIDTH IS EQUAL TO THE RAMP WIDTH.
3. THE DESIRABLE SLOPE FOR THE CURB RAMP IS 5% (1:20) OR FLATTER. THE MAXIMUM CURB RAMP SLOPE IS 8.3% (1:12).
4. THE DESIRABLE SLOPE FOR THE FLARED SIDE OF THE CURB RAMP IS 8.3% (1:12) OR FLATTER. THE MAXIMUM FLARED SIDE SLOPE IS 10% (1:10).
5. THE DESIRABLE CROSS SLOPE OF THE SIDEWALK, RAMP, OR LANDING IS 1.5% (1:66.7). THE MAXIMUM CROSS SLOPE OF THE SIDEWALK, RAMP, OR LANDING IS 2% (1:50).
6. PROVIDE TRUNCATED DOMES ON THE BOTTOM 610 mm OF EACH RAMP AS SHOWN ABOVE. SEE DETAILED DRAWING NUMBER 608-40 FOR TRUNCATED DOMES DETAILS.

REQUIREMENTS FOR ALTERATIONS TO EXISTING FACILITIES:

NOTE: WHEREVER POSSIBLE, ALTER EXISTING FACILITIES TO COMPLY WITH THE NEW CONSTRUCTION REQUIREMENTS.

1. THE MINIMUM WIDTH OF THE CURB RAMP (DIMENSION "W" ABOVE) IS 915 mm.
2. WHERE PUBLIC PEDESTRIAN RIGHT-OF-WAY WIDTH IS INSUFFICIENT TO ACCOMMODATE A TOP LANDING OF 1220 mm, PROVIDE A TOP LANDING OF 915 mm. THE LANDING WIDTH IS EQUAL TO THE RAMP WIDTH.
   NOTE: IF EXISTING RIGHT-OF-WAY OR OTHER OBSTRUCTIONS REDUCE THE LANDING LENGTH TO LESS THAN 1220 mm, THE MAXIMUM FLARED SIDE SLOPE IS 8.3% (1:12).
3. THE MAXIMUM CURB RAMP SLOPE IS 10% (1:10), PROVIDED THE RISE (DIMENSION "Y" ABOVE) IS 150 mm OR LESS. AN 8.3% (1:12) OR FLATTER SLOPE IS DESIRABLE.
4. THE MAXIMUM FLARED SIDE SLOPE IS 10% (1:10).
5. THE DESIRABLE CROSS SLOPE OF THE SIDEWALK, RAMP, OR LANDING IS 1.5% (1:66.7). THE MAXIMUM CROSS SLOPE OF THE SIDEWALK, RAMP, OR LANDING IS 2% (1:50).
6. PROVIDE TRUNCATED DOMES ON THE BOTTOM 610 mm OF EACH RAMP AS SHOWN ABOVE. SEE DETAILED DRAWING NUMBER 608-40 FOR TRUNCATED DOMES DETAILS.
7. WHERE EXISTING SITE DEVELOPMENT CONDITIONS PROHIBIT THE STRICT AND FULL COMPLIANCE OF ALL ADA CRITERIA, PROVIDE ACCESSIBILITY TO THE MAXIMUM EXTENT FEASIBLE.

GENERAL NOTES:

1. WHERE THE PUBLIC PEDESTRIAN RIGHT-OF-WAY WILL NOT ACCOMMODATE A PERPENDICULAR PUBLIC SIDEWALK CURB RAMP AND LANDING MEETING THESE REQUIREMENTS, USE A COMBINED (PARALLEL/PERPENDICULAR) OR PARALLEL PUBLIC SIDEWALK CURB RAMP.
2. COMBINED (PARALLEL/PERPENDICULAR) PUBLIC SIDEWALK CURB RAMPS ARE TO MEET THE CRITERIA FOR BOTH THE PARALLEL AND PERPENDICULAR PUBLIC SIDEWALK CURB RAMPS. (SEE DETAILED DRAWING NUMBER 608-30 AND THIS DRAWING.)

ALL DIMENSIONS ARE MILLIMETERS (mm) UNLESS OTHERWISE NOTED.

DETAILED DRAWING	
REFERENCE STANDARD SPEC. SECTION 608	DWG. NO. 608-25
PERPENDICULAR PUBLIC SIDEWALK CURB RAMPS	
EFFECTIVE: FEBRUARY 2005	
serving you with pride	MONTANA DEPARTMENT OF TRANSPORTATION

PARALLEL PUBLIC SIDEWALK CURB RAMPS

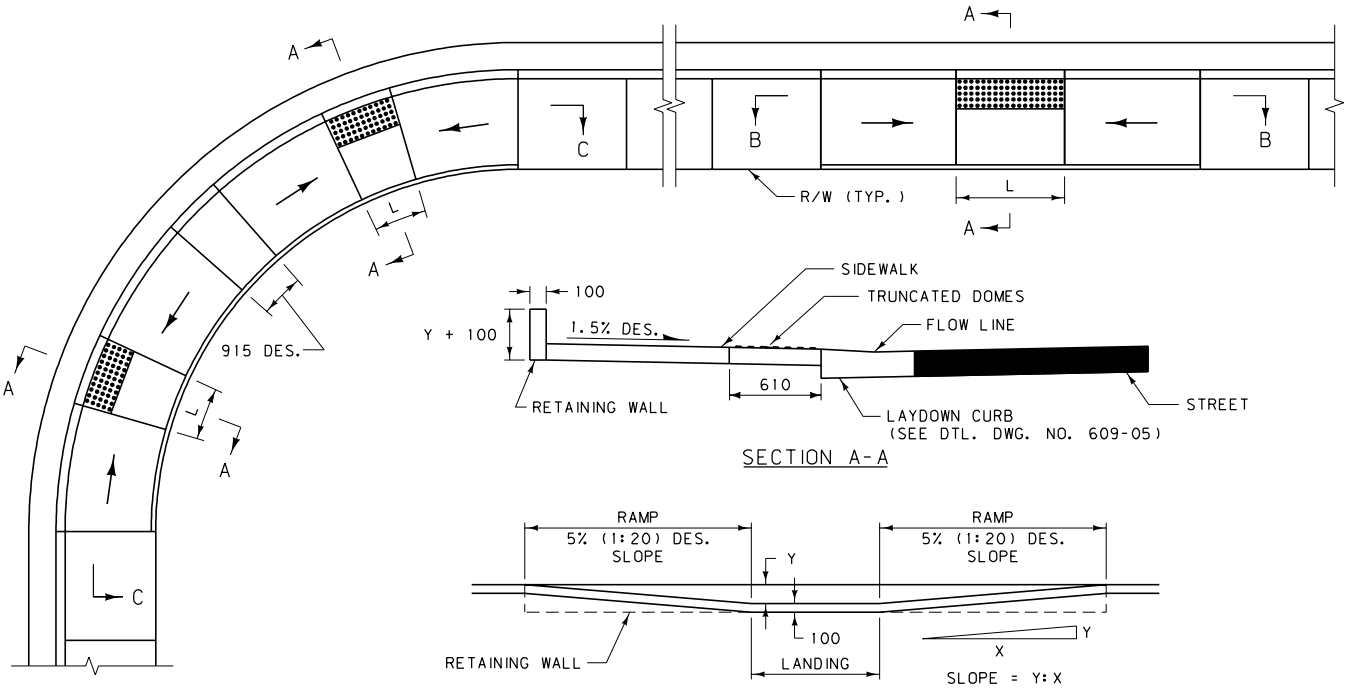

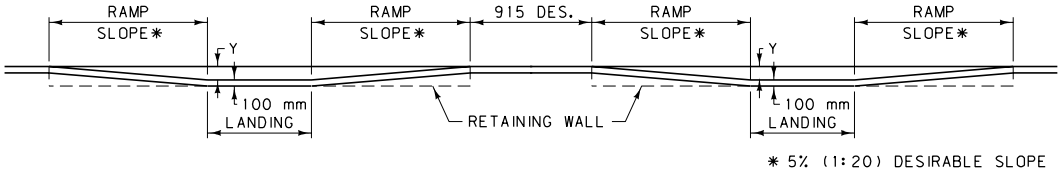

SECTION C-C

NEW CONSTRUCTION REQUIREMENTS:

1. THE MINIMUM LENGTH OF THE LANDING (DIMENSION "L" ABOVE) IS 1525 mm.
2. THE DESIRABLE SLOPE FOR THE CURB RAMPS IS 5% (1:20) OR FLATTER. THE MAXIMUM CURB RAMP SLOPE IS 8.3% (1:12).
3. THE DESIRABLE CROSS SLOPE OF THE SIDEWALK, RAMP, OR LANDING IS 1.5% (1:66.7). THE MAXIMUM CROSS SLOPE OF THE SIDEWALK, RAMP, OR LANDING IS 2% (1:50).
4. PROVIDE TRUNCATED DOMES ON THE BOTTOM 610 mm OF EACH LANDING AS SHOWN ABOVE. SEE DETAIL DRAWING NUMBER 608-40 FOR TRUNCATED DOMES DETAILS.

REQUIREMENTS FOR ALTERATIONS TO EXISTING FACILITIES:

NOTE: WHEREVER POSSIBLE, ALTER EXISTING FACILITIES TO COMPLY WITH THE NEW CONSTRUCTION REQUIREMENTS.

1. THE DESIRABLE LENGTH OF THE LANDING (DIMENSION "L" ABOVE) IS 1525 mm. THE MINIMUM LANDING LENGTH IS 1220 mm.
2. THE MAXIMUM CURB RAMP SLOPE IS 10% (1:10), PROVIDED THE RISE (DIMENSION "Y" ABOVE) IS 150 mm OR LESS. AN 8.3% (1:12) OR FLATTER SLOPE IS DESIRABLE.
3. THE DESIRABLE CROSS SLOPE OF THE SIDEWALK, RAMP, OR LANDING IS 1.5% (1:66.7). THE MAXIMUM CROSS SLOPE OF THE SIDEWALK, RAMP, OR LANDING IS 2% (1:50).
4. PROVIDE TRUNCATED DOMES ON THE BOTTOM 610 mm OF EACH LANDING AS SHOWN ABOVE. SEE DETAILED DRAWING NUMBER 608-40 FOR TRUNCATED DOMES DETAILS.
5. WHERE EXISTING SITE DEVELOPMENT CONDITIONS PROHIBIT THE STRICT AND FULL COMPLIANCE OF ALL ADA CRITERIA, PROVIDE ACCESSIBILITY TO THE MAXIMUM EXTENT FEASIBLE.

GENERAL NOTES:

1. THE COST OF THE RETAINING WALL IS INCLUDED IN THE UNIT PRICE BID FOR CONCRETE SIDEWALK.
2. COMBINED (PARALLEL/PERPENDICULAR) PUBLIC SIDEWALK CURB RAMPS ARE TO MEET THE CRITERIA FOR BOTH THE PARALLEL AND PERPENDICULAR PUBLIC SIDEWALK CURB RAMPS. (SEE DETAILED DRAWING NUMBER 608-25 AND THIS DRAWING.)

ALL DIMENSIONS ARE MILLIMETERS (mm) UNLESS OTHERWISE NOTED.

DETAILED DRAWING	
REFERENCE STANDARD SPEC. SECTION 608	DWG. NO. 608-30
PARALLEL PUBLIC SIDEWALK CURB RAMPS	
EFFECTIVE: FEBRUARY 2005	
serving you with pride	MONTANA DEPARTMENT OF TRANSPORTATION

DIAGONAL PERPENDICULAR PUBLIC SIDEWALK CURB RAMP

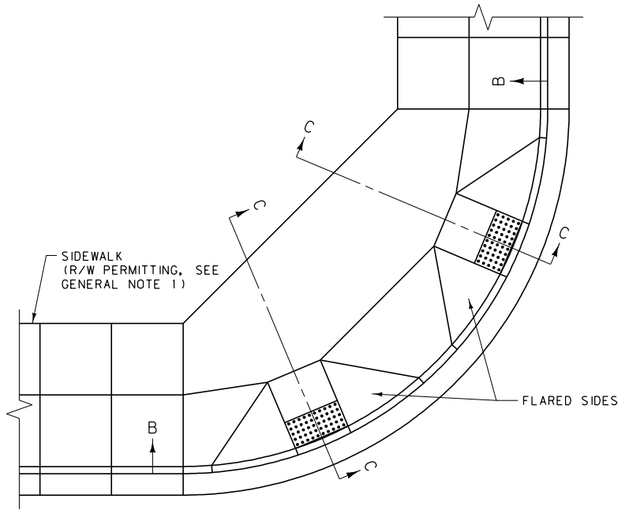

SINGLE DIAGONAL PERPENDICULAR PUBLIC SIDEWALK CURB RAMP

NOTE: SINGLE DIAGONAL PERPENDICULAR PUBLIC SIDEWALK CURB RAMPS SERVING TWO STREET CROSSING DIRECTIONS ARE NOT PERMITTED IN NEW CONSTRUCTION.

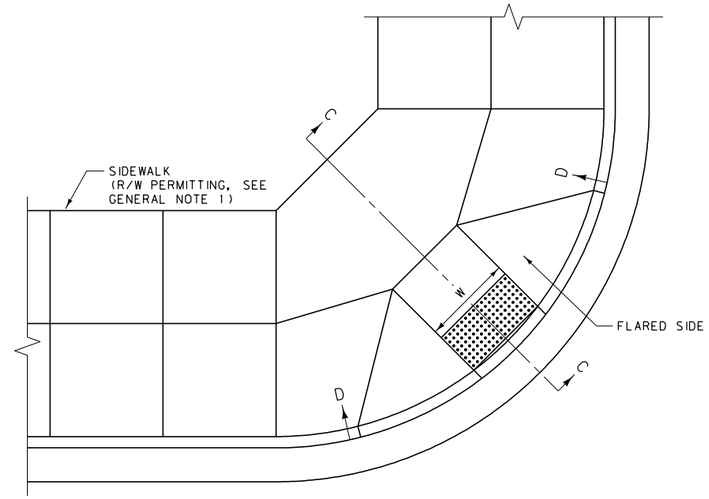

PRIVATE APPROACH SIDEWALK CURB RAMP

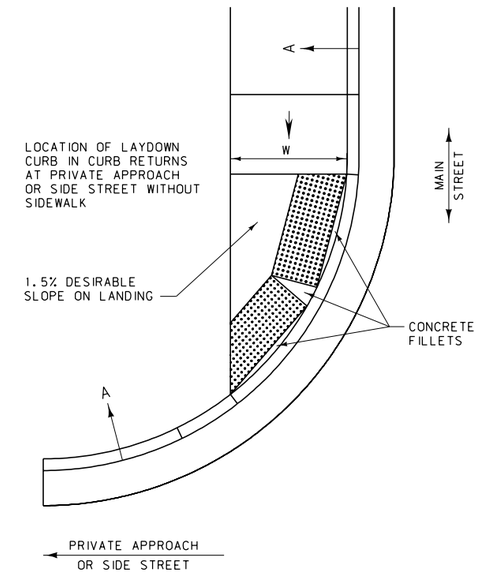

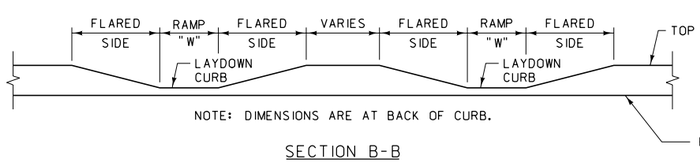

SECTION B-B

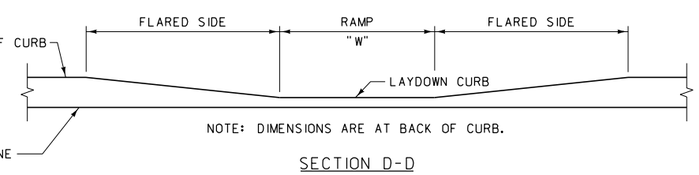

SECTION D-D

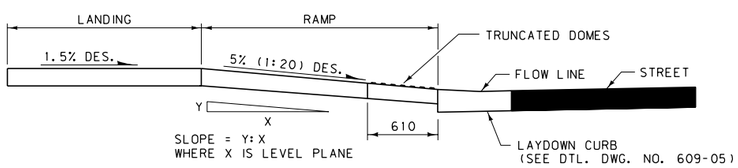

SECTION C-C

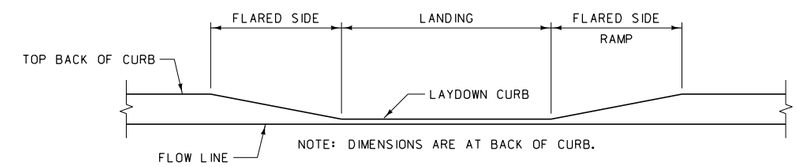

SECTION A-A

NEW CONSTRUCTION REQUIREMENTS:

1. THE DESIRABLE WIDTH OF THE CURB RAMP (DIMENSION "W" ABOVE) IS 1220 mm OR WIDER. THE MINIMUM WIDTH ("W") IS 915 mm.
2. THE DESIRABLE LENGTH OF THE LANDING AT THE TOP OF THE CURB RAMP (DIMENSION "L" ABOVE) IS 1525 mm. THE MINIMUM LENGTH "L" IS 1220 mm. THE LANDING WIDTH IS EQUAL TO THE RAMP WIDTH.
3. THE DESIRABLE SLOPE FOR THE CURB RAMP IS 5% (1:20) OR FLATTER. THE MAXIMUM CURB RAMP SLOPE IS 8.3% (1:12).
4. THE DESIRABLE SLOPE FOR THE FLARED SIDE OF THE CURB RAMP IS 8.3% (1:12) OR FLATTER. THE MAXIMUM FLARED SIDE SLOPE IS 10% (1:10).
5. THE DESIRABLE CROSS SLOPE OF THE SIDEWALK, RAMP, OR LANDING IS 1.5% (1:66.7). THE MAXIMUM CROSS SLOPE OF THE SIDEWALK, RAMP, OF LANDING IS 2% (1:50).
6. PROVIDE TRUNCATED DOMES ON THE BOTTOM 610 mm OF EACH RAMP AS SHOWN ABOVE. SEE DETAILED DRAWING NUMBER 608-40 FOR TRUNCATED DOMES DETAILS.

REQUIREMENTS FOR ALTERATIONS TO EXISTING FACILITIES:

NOTE: WHEREVER POSSIBLE, ALTER EXISTING FACILITIES TO COMPLY WITH THE NEW CONSTRUCTION REQUIREMENTS.

1. THE MINIMUM WIDTH OF THE CURB RAMP (DIMENSION "W" ABOVE) IS 915 mm.
2. WHERE PUBLIC PEDESTRIAN RIGHT-OF-WAY WIDTH IS INSUFFICIENT TO ACCOMMODATE A TOP LANDING OF 1220 mm, PROVIDE A TOP LANDING OF 915 mm. THE LANDING WIDTH IS EQUAL TO THE RAMP WIDTH.
   NOTE: IF EXISTING RIGHT-OF-WAY OR OTHER OBSTRUCTIONS REDUCE THE LANDING LENGTH TO LESS THAN 1220 mm, THE MAXIMUM FLARED SIDE SLOPE IS 8.3% (1:12).
3. THE MAXIMUM CURB RAMP SLOPE IS 10% (1:10), PROVIDED THE RISE (DIMENSION "Y" ABOVE) IS 150 mm OR LESS. AN 8.3% (1:12) OR FLATTER SLOPE IS DESIRABLE.
4. THE MAXIMUM FLARED SIDE SLOPE IS 10% (1:10).
5. THE DESIRABLE CROSS SLOPE OF THE SIDEWALK, RAMP, OR LANDING IS 1.5% (1:66.7). THE MAXIMUM CROSS SLOPE OF THE SIDEWALK, RAMP, OR LANDING IS 2% (1:50).
6. PROVIDE TRUNCATED DOMES ON THE BOTTOM 610 mm OF EACH RAMP AS SHOWN ABOVE. SEE DETAILED DRAWING NUMBER 608-40 FOR TRUNCATED DOMES DETAILS.
7. WHERE EXISTING SITE DEVELOPMENT CONDITIONS PROHIBIT THE STRICT AND FULL COMPLIANCE OF ALL ADA CRITERIA, PROVIDE ACCESSIBILITY TO THE MAXIMUM EXTENT FEASIBLE.

GENERAL NOTES:

1. WHERE THE PUBLIC PEDESTRIAN RIGHT-OF-WAY WILL NOT ACCOMMODATE A DIAGONAL PERPENDICULAR PUBLIC SIDEWALK CURB RAMP AND LANDING MEETING THESE REQUIREMENTS, USE ANOTHER RAMP DESIGN.
2. TRIM PRECAST TRUNCATED DOME PANELS TO FIT ON PRIVATE APPROACH SIDEWALK CURB RAMPS AS SHOWN ABOVE.

ALL DIMENSIONS ARE MILLIMETERS (mm) UNLESS OTHERWISE NOTED.

DETAILED DRAWING	
REFERENCE STANDARD SPEC. SECTION 608	DWG. NO. 608-35
DIAGONAL PERPENDICULAR PUBLIC SIDEWALK CURB RAMPS	
EFFECTIVE: FEBRUARY 2005	
serving you with pride	MONTANA DEPARTMENT OF TRANSPORTATION

PRECAST CONCRETE TRUNCATED DOMES PANEL

(REBAR OMITTED FOR CLARITY)

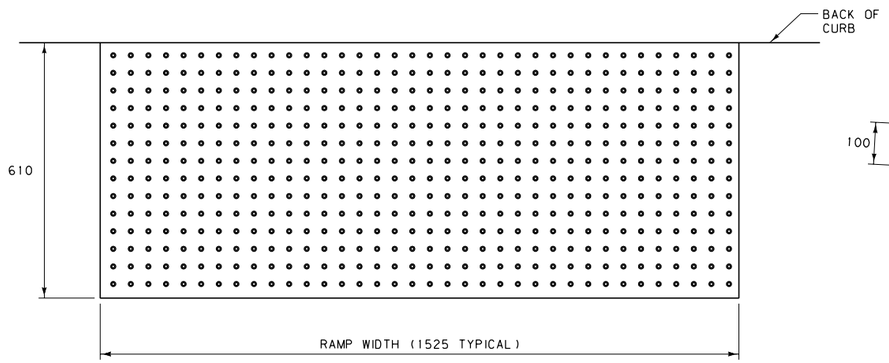

PLAN VIEW

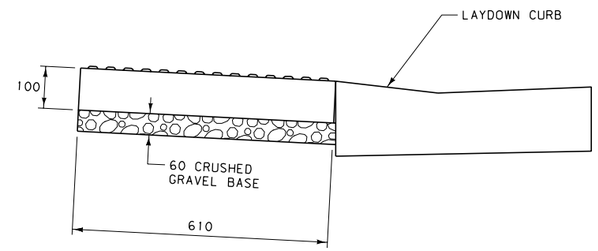

SIDE VIEW

TRUNCATED DOMES ALIGNMENT AND PATTERN

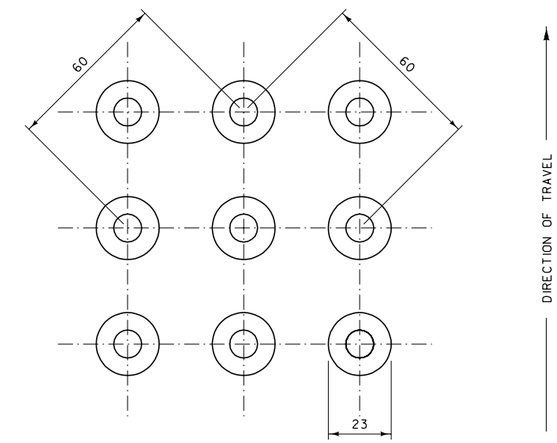

SQUARE PATTERN
PARALLEL ALIGNMENT

REBAR PLACEMENT DETAIL

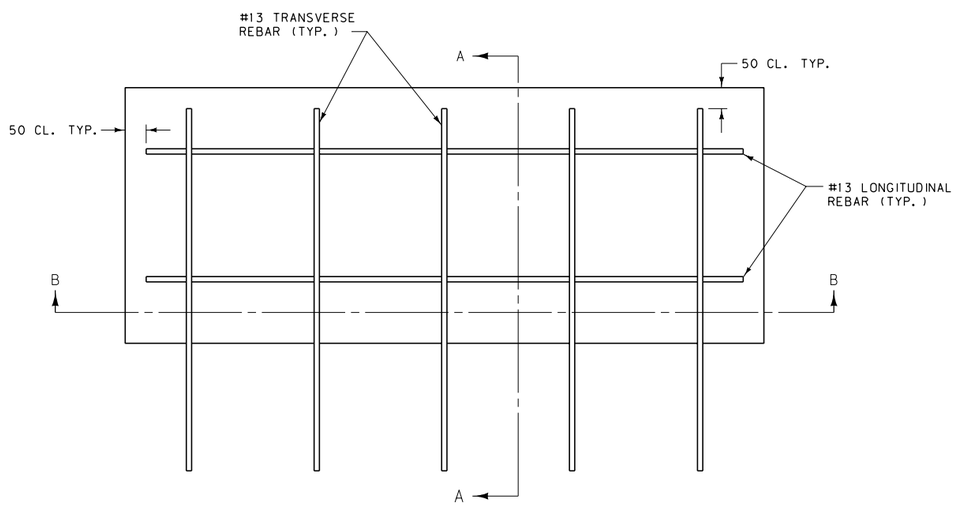

PLAN VIEW

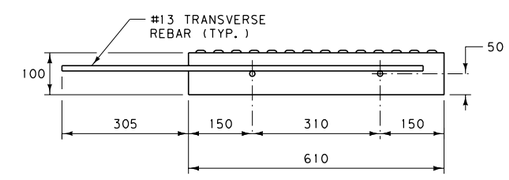

SECTION A-A

TRUNCATED DOMES PLACEMENT AT EDGE OF PANEL

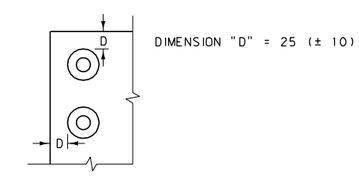

DOME PROFILE

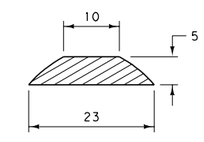

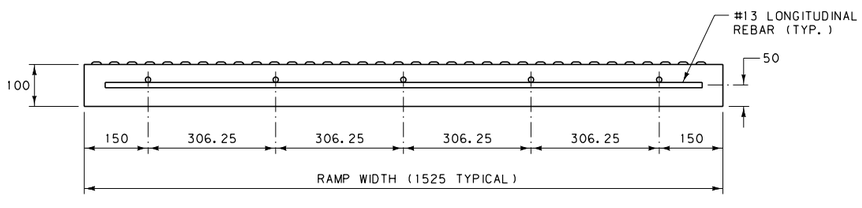

SECTION B-B

CONSTRUCTION REQUIREMENTS:

1. USE CLASS "A" OR "D" CONCRETE WITH A BRICK RED DYE COLOR.
2. PRECAST PANELS AND ASSURE ADEQUATE STRENGTH PRIOR TO PLACEMENT. PLACE PANELS PRIOR TO ADJACENT SIDEWALK AND RAMP CONSTRUCTION.
3. PROVIDE TRUNCATED DOMES FREE OF AIR BUBBLES, VOIDS, AND COARSE AGGREGATE.
4. ROUND PANEL EDGES WITH STANDARD EDGING TOOL TO MATCH ADJACENT JOINT EDGING.
5. TOOL ADJACENT CONCRETE TO ALLEVIATE POSSIBLE CORNER CRACKING.
6. ENSURE A UNIFORM GRADE ON THE RAMP, FREE OF SAGS AND SHORT GRADE CHANGES.
7. ENSURE THE SURFACE OF THE PRECAST PANEL IS CLEAN AND MAINTAINS A UNIFORM BRICK RED COLOR AFTER PLACEMENT OF THE RAMP CONCRETE.

ALL DIMENSIONS ARE MILLIMETERS (mm) UNLESS OTHERWISE NOTED.

DETAILED DRAWING	
REFERENCE STANDARD SPEC. SECTION 608	DWG. NO. 608-40
TRUNCATED DOMES	
EFFECTIVE: FEBRUARY 2005	
serving you with pride	MONTANA DEPARTMENT OF TRANSPORTATION

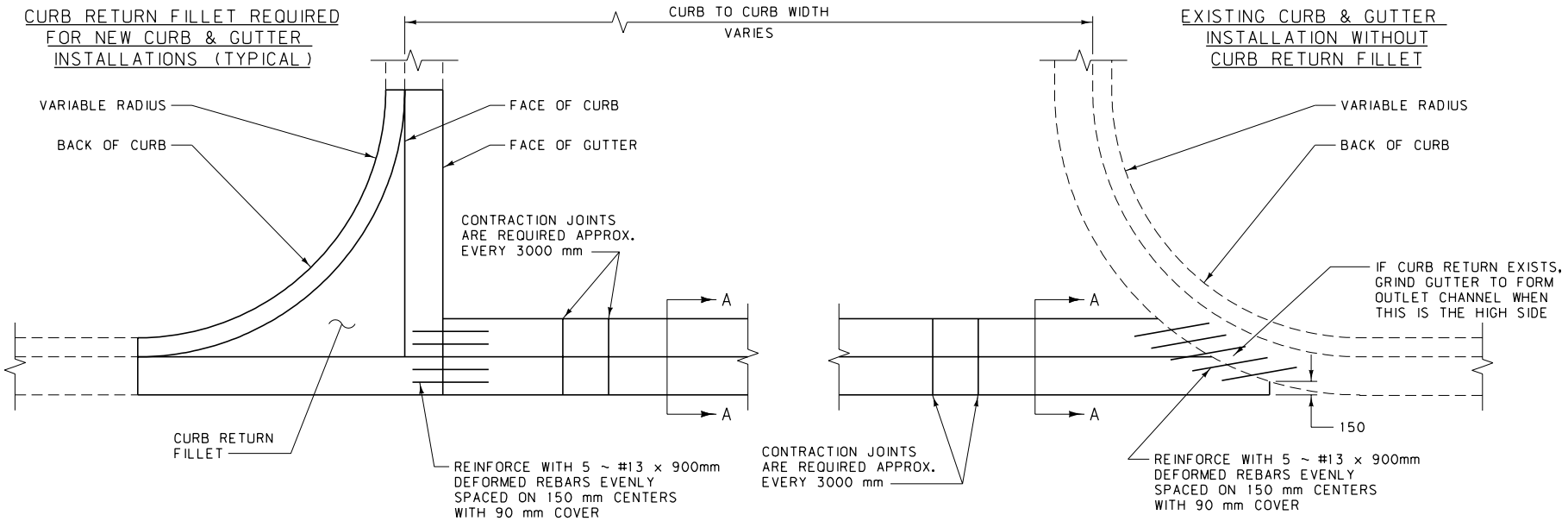

PLAN

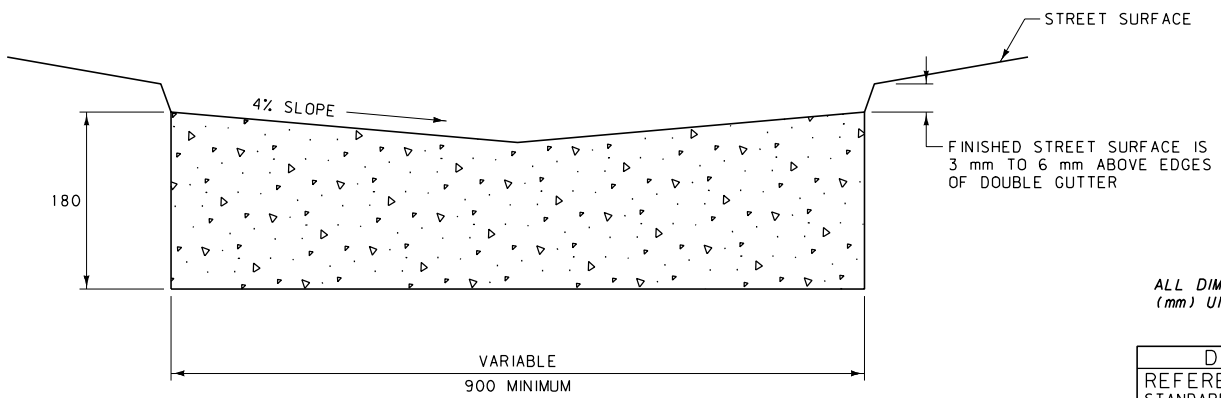

SECTION A-A

NOTES:

INDIVIDUAL LOCATIONS MAY REQUIRE MORE DETAILS FOR ELEVATIONS AND DIMENSIONS.

INSTALL REINFORCEMENT AT ALL CONSTRUCTION JOINTS.

CONTRACTION JOINTS ARE 3 mm MIN. AND 10 mm MAX. IN WIDTH. FORM JOINTS BY SAWING OR SCORING TO A MINIMUM DEPTH OF 25 mm. FORM SCORED JOINTS BY A TOOL WHICH WILL LEAVE ROUNDED CORNERS AND DESTROY AGGREGATE INTERLOCK TO A MINIMUM DEPTH OF 25 mm.

ALL DIMENSIONS ARE MILLIMETERS (mm) UNLESS OTHERWISE NOTED.

DETAILED DRAWING	
REFERENCE STANDARD SPEC. SECTION 609	DWG. NO. 609-00
CONCRETE VALLEY GUTTER	
EFFECTIVE: FEBRUARY 2005	

MDT serving you with pride — MONTANA DEPARTMENT OF TRANSPORTATION

CONCRETE CURBS

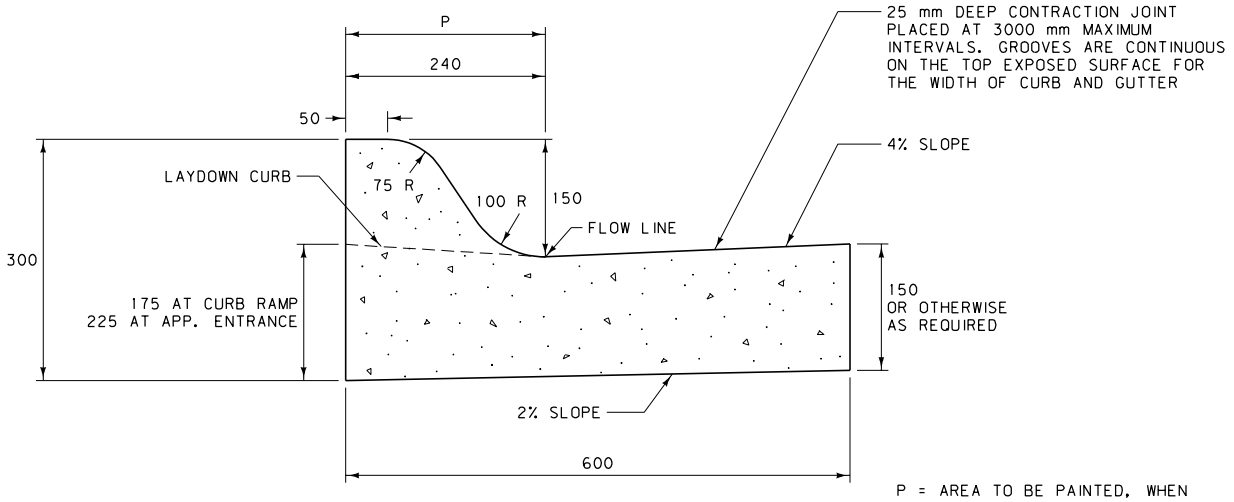

P = AREA TO BE PAINTED, WHEN PAINTED CURB IS REQUIRED

CURB & GUTTER SECTION

0.110 m³ CONC. PER METER OF CURB FOR 150 mm GUTTER. ✱

JOINTS:

(A) WHEN INTEGRAL WITH, TIED TO, OR PLACED AGAINST PORTLAND CEMENT CONCRETE PAVEMENT (P.C.C.P.): MATCH TRANSVERSE CONTRACTION AND/OR EXPANSION JOINTS IN THE ADJACENT P.C.C.P. SLAB. IF REQUIRED, EXTEND 13 mm MIN. WIDTH PREFORMED EXPANSION JOINTS COMPLETELY THROUGH CURB AND GUTTER THE SAME WIDTH AS THE P.C.C.P. SLAB JOINT. FILL CURB AND GUTTER EXPANSION JOINTS WITH PREFORMED EXPANSION JOINT FILLER.

(B) ALL OTHER CASES:
SPACE CONTRACTION JOINTS IN CURB AND GUTTER AT 3000 mm INTERVALS OR LESS EXCEPT AS SPECIFIED IN (A) ABOVE. EXTEND 13 mm MIN. WIDTH EXPANSION JOINTS COMPLETELY THROUGH CURB AND GUTTER EVERY 30 m (± 10 METERS), AT INTERVALS EQUAL TO THE NEAREST MULTIPLE OF THE CONTRACTION JOINT INTERVAL, AND FILL WITH EXPANSION JOINT FILLER.

(C) CONTRACTION JOINTS:
CONTRACTION JOINTS ARE 3 mm MIN. AND 10 mm MAX. IN WIDTH. FORM JOINTS BY SAWING OR SCORING TO A MINIMUM DEPTH OF 25 mm. FORM SCORED JOINTS BY A TOOL WHICH WILL LEAVE ROUNDED CORNERS AND DESTROY AGGREGATE INTERLOCK TO A MINIMUM DEPTH OF 25 mm.

(D) OTHER JOINTS:
SEPARATE THE CURB AND GUTTER FROM ADJACENT SIDEWALK AT POINTS SHOWN ON DTL. DWG. NO. 608-05 WITH A BOND BREAKER MATERIAL, EXCEPT AT APPROACH LAYDOWN CURB LOCATIONS, WHICH REQUIRE SEPARATION USING 13 mm MIN. WIDTH PREFORMED EXPANSION JOINT MATERIAL. PLACE 13 mm MIN. WIDTH PREFORMED EXPANSION JOINT MATERIAL AT ALL CURB RETURNS, BRIDGES, DROP INLETS, AND WHERE MEETING CURB AND GUTTER IN PLACE.

EXPANSION JOINT FILLER MATERIAL:

USE PREFORMED EXPANSION JOINT FILLER MEETING THE REQUIREMENTS OF STD. SPEC. 707.

BOND BREAKER MATERIAL:

USE A 6.8 OR 13.6 KILOGRAM ROOFING FELT MATERIAL, OR OTHER PRODUCT AS APPROVED BY THE ENGINEER DO NOT USE EXPANSION JOINT MATERIAL.

RADII:

MINIMUM CURB RETURN RADII = 3050 mm. 4575 mm RADII ARE DESIRABLE FOR STREETS.

CONCRETE:

UNLESS OTHERWISE SPECIFIED, CONSTRUCT CONCRETE CURBS AND CONCRETE INTEGRAL CURB AND GUTTER WITH CLASS "D" CONCRETE OR APPROVED EQUAL.

✱ QUANTITIES FOR ESTIMATING PURPOSES ONLY.

BITUMINOUS CURBS

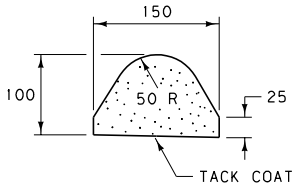

CURB SECTION

1 m³ OF MATERIAL WILL MAKE ABOUT 89 METERS OF CURB. ✱

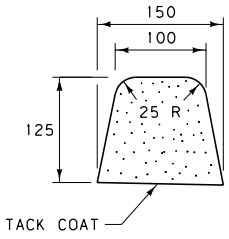

CURB SECTION

1 m³ OF MATERIAL WILL MAKE ABOUT 64 METERS OF CURB. ✱

NOTES:

WHEN CURB IS USED IN CONJUNCTION WITH GUARDRAIL, USE THE 100 mm TYPE. OTHERWISE, THE CONTRACTOR MAY USE EITHER SECTION.

CONFORM ALL MATERIALS AND CONSTRUCTION TO THE STANDARD SPECIFICATIONS FOR BITUMINOUS CURB.

CONCRETE MAY BE SUBSTITUTED FOR THE BITUMINOUS MATERIAL. WHEN CONCRETE IS USED, CONSTRUCT CURB IN ACCORDANCE WITH STANDARD SPECIFICATION 609.

ALL DIMENSIONS ARE MILLIMETERS (mm) UNLESS OTHERWISE NOTED.

DETAILED DRAWING	
REFERENCE STANDARD SPEC. SECTION 609	DWG. NO. 609-05
MISCELLANEOUS CURBS	
EFFECTIVE: FEBRUARY 2005	

serving you with pride — MONTANA DEPARTMENT OF TRANSPORTATION

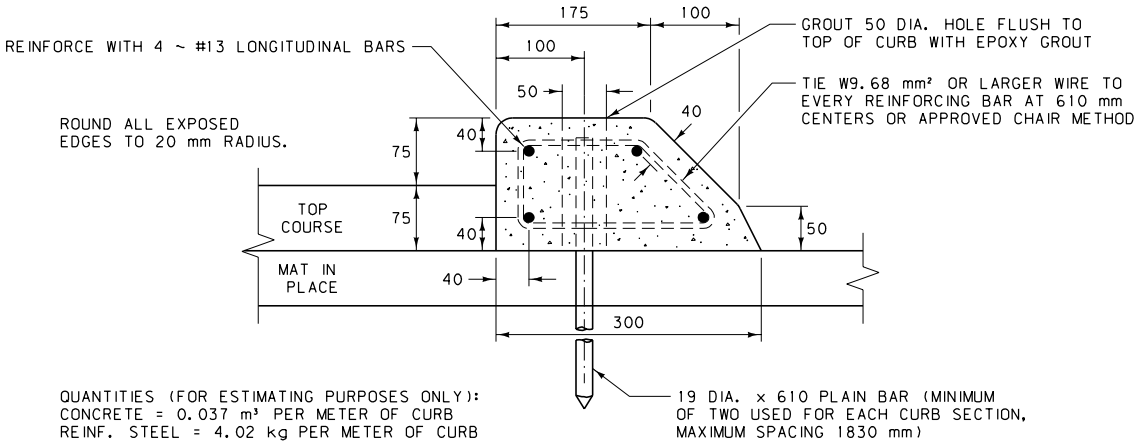

TYPE "A" - MAT IN PLACE

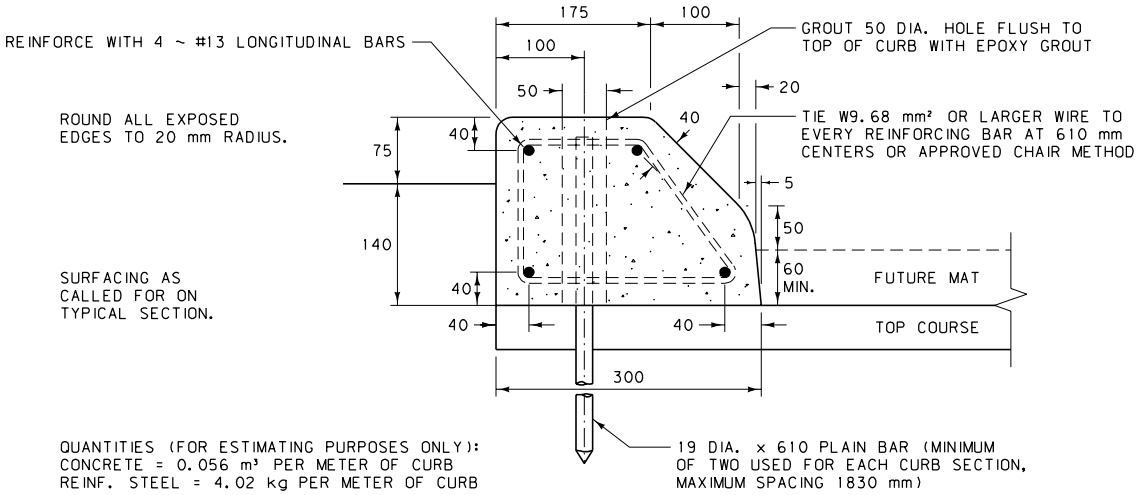

TYPE "B" - FUTURE MAT

CONSTRUCTION:

CURBS MAY BE CONSTRUCTED USING ANY OF THE FOLLOWING THREE METHODS:
(1) PRECAST
(2) CAST IN PLACE
(3) CONSTRUCTED BY THE USE OF AN APPROVED CURB FORMING OR SLIP FORM MACHINE.

WHEN USING EITHER METHOD (2) OR (3), REINFORCING STEEL IS NOT REQUIRED, WITH THE EXCEPTION OF THE PINS, AND THE CURBS ARE SCORED OR SAWN TO A DEPTH OF 25 mm TO FORM CONTRACTION JOINTS AT INTERVALS OF 3000 mm OR LESS. EXTEND 13 mm MIN. WIDTH EXPANSION JOINTS COMPLETELY THROUGH CURB EVERY 30 m (± 10 METERS), AT INTERVALS EQUAL TO THE NEAREST MULTIPLE OF THE CONTRACTION JOINT INTERVAL AND FILL WITH PREFORMED EXPANSION JOINT FILLER MEETING STD. SPEC. 707.

FORM PRECAST CURBS IN THEIR INVERTED POSITION, IN LENGTHS NOT LESS THAN 1220 mm, OR MORE THAN 3050 mm.

MATERIAL:

CONSTRUCT CURBS OF CLASS "D" CONCRETE, OR AN APPROVED EQUIVALENT MIX.

EPOXY BINDER FOR GROUTING MUST MEET THE REQUIREMENTS OF AASHTO M 235 (ASTM C 881).

ALL DIMENSIONS ARE MILLIMETERS (mm) UNLESS OTHERWISE NOTED.

DETAILED DRAWING	
REFERENCE STANDARD SPEC. SECTION 609	DWG. NO. 609-10
MEDIAN CONCRETE CURBS	
EFFECTIVE: FEBRUARY 2005	

serving you with pride — MONTANA DEPARTMENT OF TRANSPORTATION

NOTES:

13 mm EXPANSION JOINTS ARE SHOWN AS DARK SOLID LINES FOR VISUAL PURPOSES.

BOND BREAKER IS SHOWN AS DARK DASHED LINE FOR VISUAL PURPOSES.

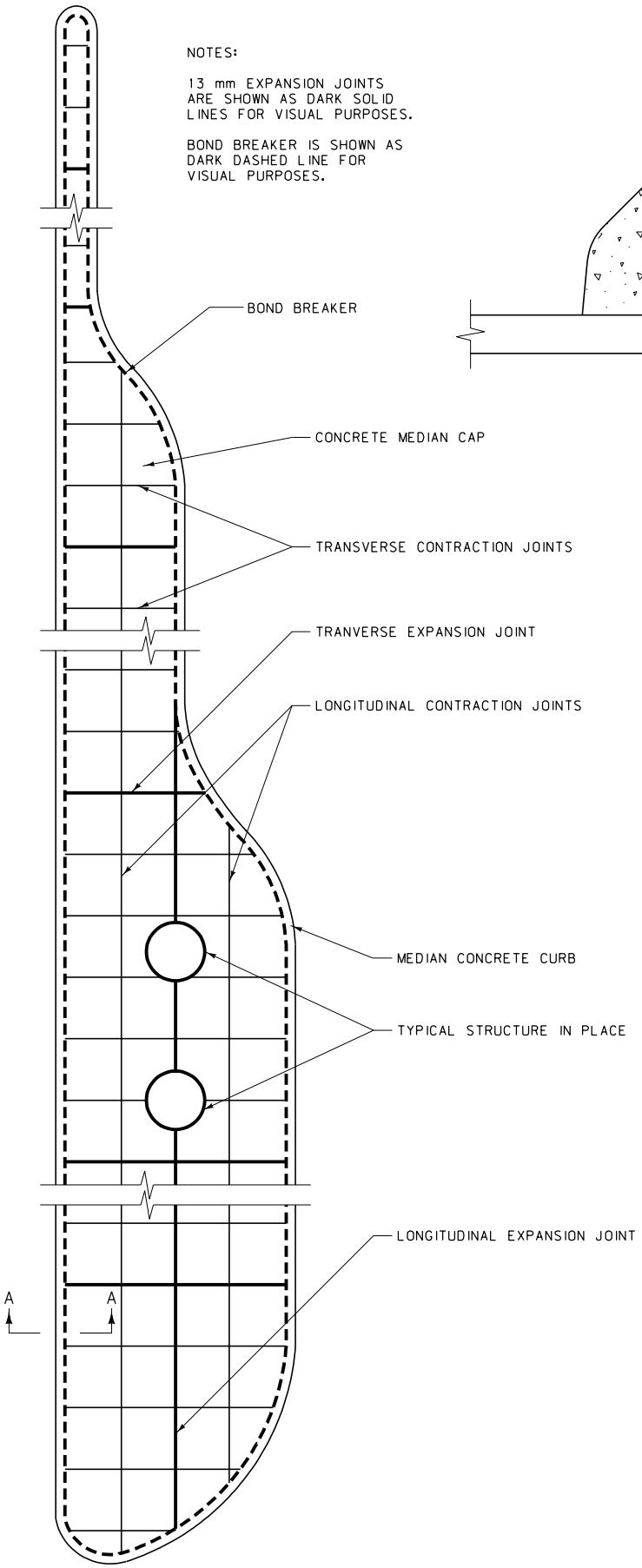

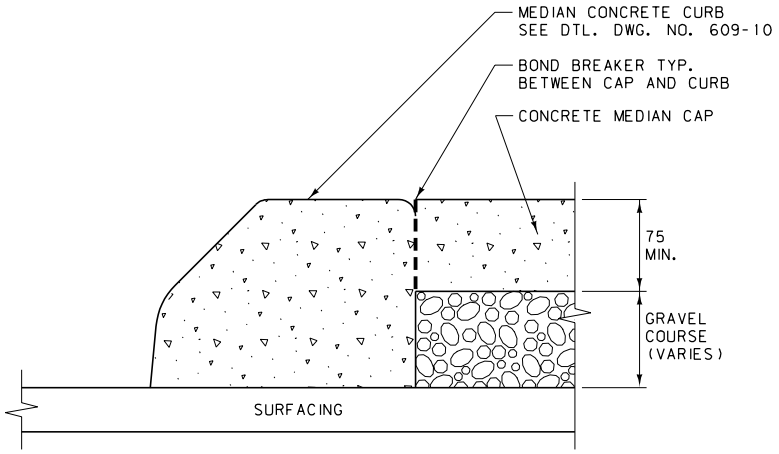

SECTION A-A

NOTES:

INSTALL PREFORMED EXPANSION JOINT FILLER, STD. SPEC. 707.01.3, AT ALL EXPANSION JOINTS, FOR THE FULL THICKNESS OF THE CONCRETE MEDIAN CAP.

INSTALL A BOND BREAKER FOR THE FULL THICKNESS OF THE CONCRETE MEDIAN CAP BETWEEN THE CAP AND THE CURB. USE A 6.8 OR 13.6 KILOGRAM ROOFING FELT MATERIAL, OR OTHER PRODUCT AS APPROVED BY THE ENGINEER, FOR THE BOND BREAKER. DO NOT USE EXPANSION JOINT MATERIAL AS A BOND BREAKER.

ALL JOINTS MUST BE STRAIGHT AND PERPENDICULAR TO THE CENTERLINE AND THE SURFACE OF THE MEDIAN CAP. WHERE PRACTICAL, ALIGN ALL JOINTS WITH LIKE JOINTS IN ADJOINING WORK. USE JOINTS TO OUTLINE ALL PANELS IN THE MEDIAN CAP. USE SQUARE PANELS WHEN PRACTICAL. ON NARROW MEDIAN CAPS RECTANGULAR SHAPED PANELS ARE ACCEPTABLE.

CONTRACTION JOINTS MAY NOT BE MORE THAN 3 mm WIDE AND NOT LESS THAN 25 mm IN DEPTH AND MAY BE CUT BY A GROOVE FORMING TOOL.

LOCATE EXPANSION JOINTS AT ALL JOINTS BETWEEN THE MEDIAN CAP AND STRUCTURES IN PLACE AND EVERY 30 METERS (± 10 METERS) AT INTERVALS EQUAL TO THE NEAREST MULTIPLE OF THE CONTRACTION JOINT INTERVAL. USE A LONGITUDINAL EXPANSION JOINT IN THE CENTERLINE OF ALL MEDIAN CAPS WIDER THAN 3660 mm.

USE LONGITUDINAL CONTRACTION JOINTS IN MEDIAN CAPS WIDER THAN 1830 mm, WITH SPACING NOT TO EXCEED 1830 mm. SPACE TRANSVERSE CONTRACTION JOINTS EQUAL TO THE LONGITUDINAL SPACING ON MEDIAN CAPS WIDER THAN 1830 mm. FOR MEDIAN CAPS NARROWER THAN 1830 mm, SPACE TRANSVERSE CONTRACTION JOINTS 3000 mm OR LESS.

ALL DIMENSIONS ARE MILLIMETERS (mm) UNLESS OTHERWISE NOTED.

DETAILED DRAWING	
REFERENCE STANDARD SPEC. SECTION 609	DWG. NO. 609-12
CONCRETE MEDIAN CAPS	
EFFECTIVE: FEBRUARY 2005	
serving you with pride	MONTANA DEPARTMENT OF TRANSPORTATION

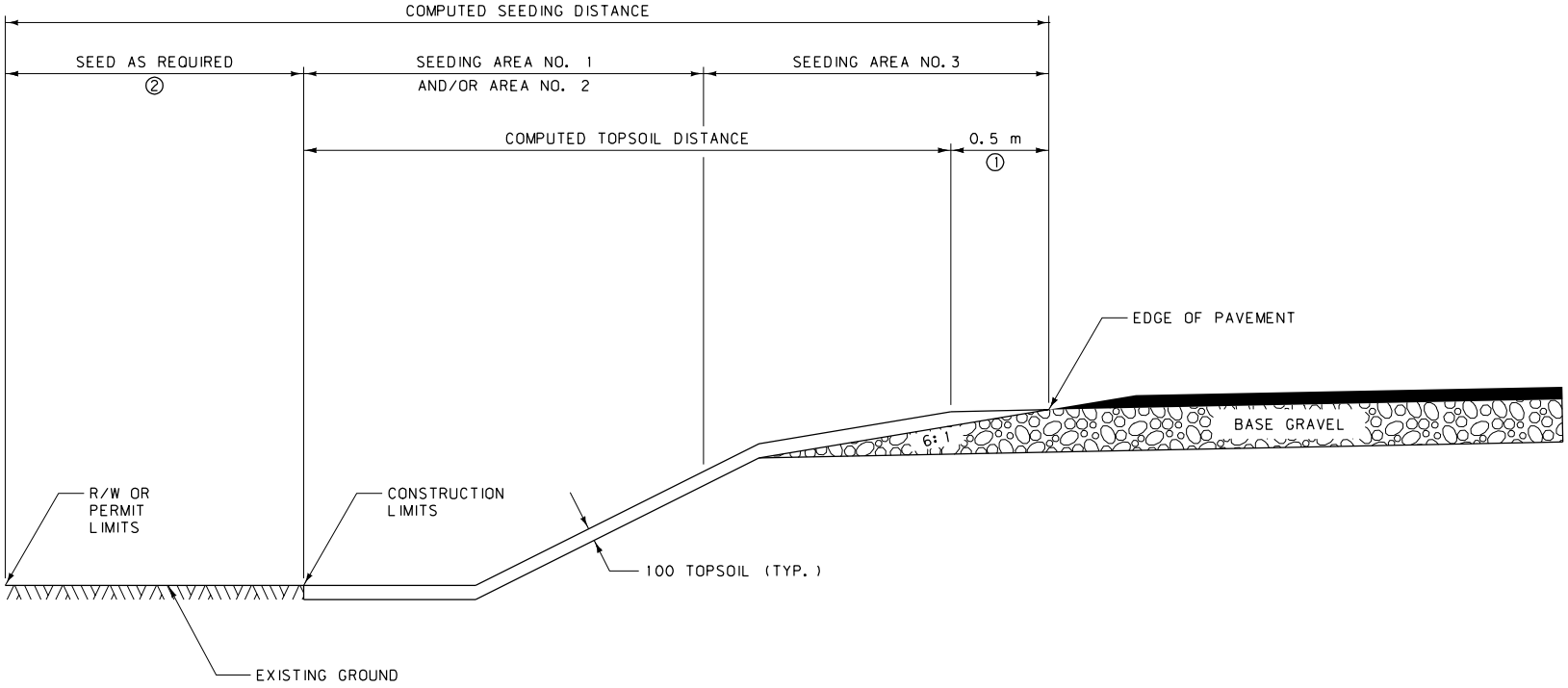

SEEDING		
AREA NO.	DEFINITION	TREATMENT
1	3:1 OR FLATTER SLOPES	CONDITION SEEDBED, SEED & FERTILIZE
2	STEEPER THAN 3:1 SLOPES	SEED, FERTILIZE & MULCH
3	4.5 m OR TO THE EDGE OF THE SURFACING INSLOPE, WHICHEVER IS GREATER	CONDITION SEEDBED & SEED

NOTES:

① PLACE TOPSOIL ON THE SURFACING INSLOPE TO A DEPTH OF 100 mm (±) NOT LESS THAN 0.5 m FROM THE EDGE OF PAVEMENT. FEATHER TOPSOIL TO THE EDGE OF PAVEMENT.

② SEED AREAS BEYOND THE CONSTRUCTION LIMITS WITHIN THE RIGHT-OF-WAY OR PERMIT BOUNDARIES THAT HAVE BEEN DISTURBED (ie. STAGING AREAS, TOPSOIL PILES, EQUIPMENT TRAILS, etc.)

③ SALVAGE SUFFICIENT AMOUNTS OF TOPSOIL TO ASSURE QUANTITIES ARE AVAILABLE TO COVER ALL CLEARED AND GRUBBED AREAS WITH 100 mm OF TOPSOIL. IF QUANTITIES ARE NOT AVAILABLE, RE-SPREAD TOPSOIL TO AN EVEN DEPTH ACROSS ALL DISTURBED GROUND.

ALL DIMENSIONS ARE MILLIMETERS (mm) UNLESS OTHERWISE NOTED.

DETAILED DRAWING

REFERENCE
STANDARD SPEC.
SECTION 610

DWG. NO.
610-00

TOPSOIL AND SEEDING

EFFECTIVE: FEBRUARY 2005

MDT serving you with pride

MONTANA DEPARTMENT OF TRANSPORTATION

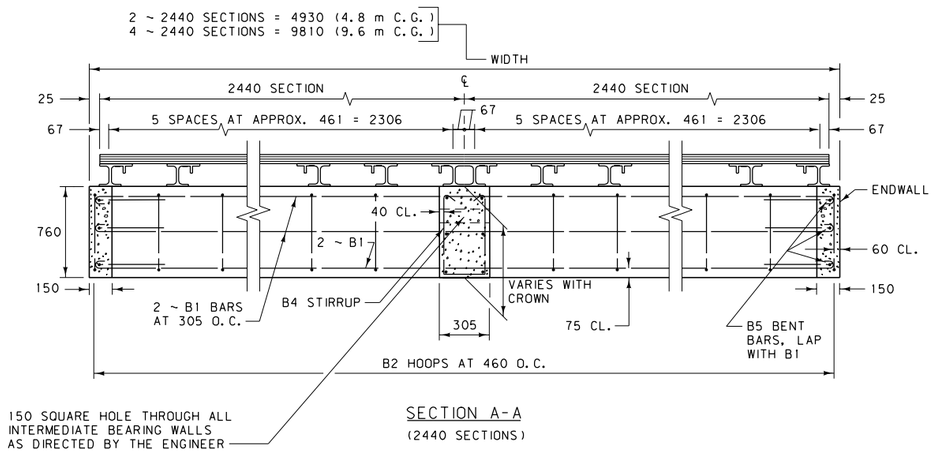

SECTION A-A

(2440 SECTIONS)

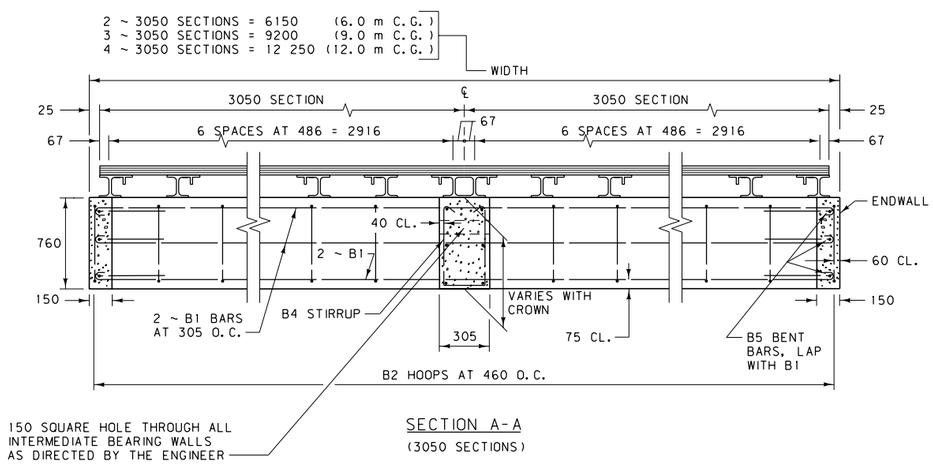

SECTION A-A

(3050 SECTIONS)

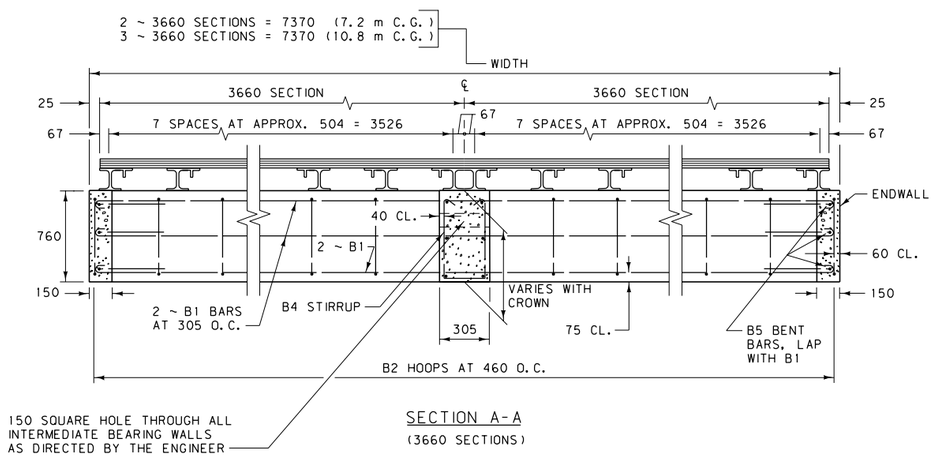

SECTION A-A

(3660 SECTIONS)

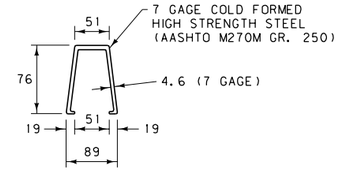

CROSSBAR

NOTE: WELD CROSSBARS TO 64 x 64 x 9.5 x 648 ANGLES HINGED AREA ONLY. SEE HINGE DETAIL.

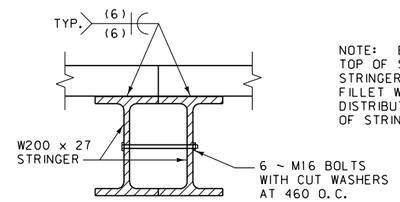

MULTIPLE INSTALLATION JOINT

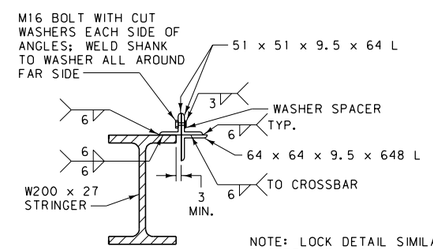

HINGE DETAIL

(HINGED AREA OPENS FOR CLEANOUT)

NOTE: LOCK DETAIL SIMILAR EXCEPT USE M16 GALV. MACHINED BOLT WITH GALV. CUT WASHER & GALV. HEX NUTS INSTEAD OF WELDED STUD BOLT.

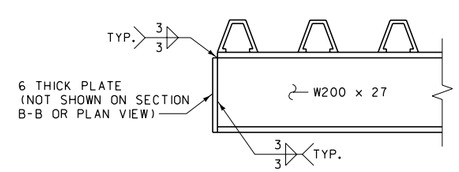

SECTION D

LIVE LOADING: STANDARD (HS20) LOADING

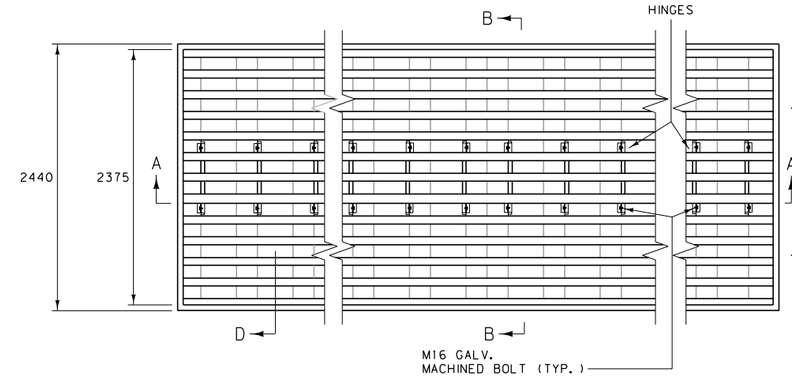

PLAN

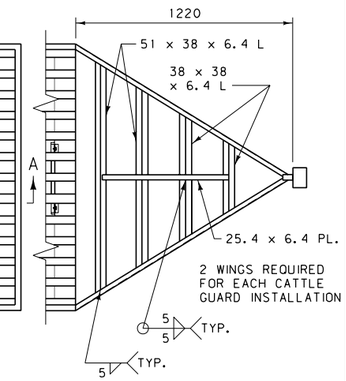

STEEL WING

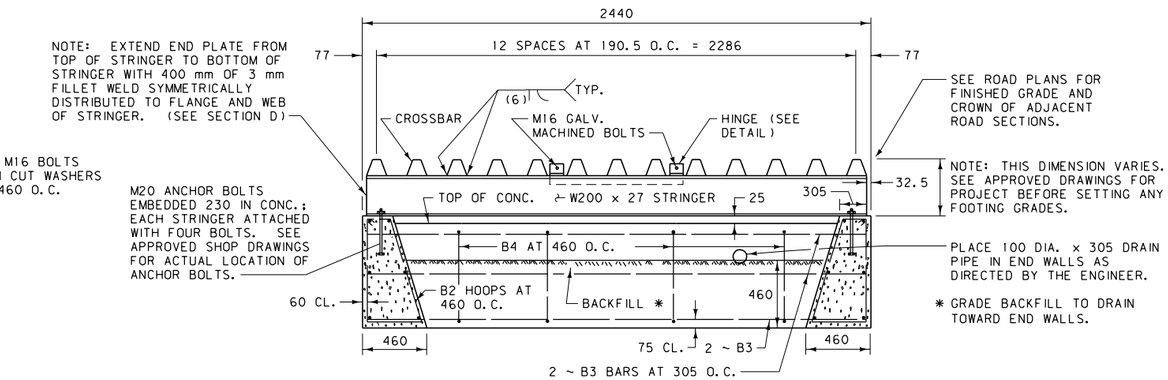

MAX. FOOTING PRESS = 105 kpa

SECTION B-B

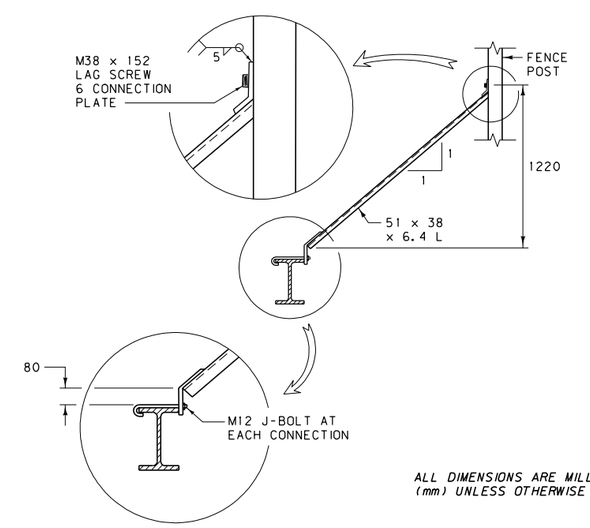

STEEL WING CONNECTION DETAILS

ALL DIMENSIONS ARE MILLIMETERS (mm) UNLESS OTHERWISE NOTED.

NOTES:

C.G. = CATTLE GUARD (METRIC C.G. SIZES ARE NOMINAL.)

THE CONTRACTOR HAS THE OPTION OF USING PRECAST CONCRETE BASES FOR CATTLE GUARDS. SEE DTL. DWG. NO. 611-15.

FOR CATTLE GUARDS ON FIELD OR PRIVATE APPROACHES, THE PRECAST CONCRETE BASES IN DTL. DWG. NO. 611-10 MAY BE USED.

USE AN EVEN NUMBER OF STEEL CATTLE GUARD GRATES WHEN A CROWNED INSTALLATION IS REQUIRED.

SEE DTL. DWG. NO. 611-05 FOR CAST-IN-PLACE CATTLE GUARD REBAR DETAILS.

STRUCTURAL STEEL IS TO CONFORM TO AASHTO M270M GRADE 250.

ANCHOR BOLTS ARE TO CONFORM TO AASHTO M314M GRADE 250.

ALL NUTS, BOLTS, AND WASHERS ARE TO CONFORM TO ASTM A307M AND BE GALVANIZED PER AASHTO M232M.

DETAILED DRAWING	
REFERENCE STANDARD SPEC. SECTION 611	DWG. NO. 611-00
CAST-IN-PLACE CATTLE GUARD	
EFFECTIVE: FEBRUARY 2005	

MDT serving you with pride — MONTANA DEPARTMENT OF TRANSPORTATION

BILL OF REINFORCING STEEL

BENT BARS (ALL DIMENSIONS ARE OUT TO OUT)

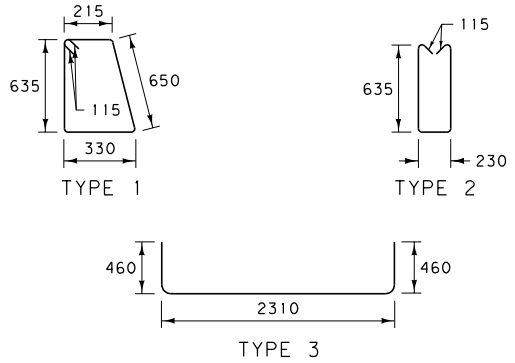

4.8 m C.G.				
MARK	SIZE	NO.	TYPE	LENGTH
B1	#13	12	STR.	5105
B2	#13	22	1	2060
B3	#13	6	STR.	2310
B4	#13	4	2	1730
B5	#13	6	3	3230
ESTIMATED WT. = 145.6 kg				

9.0 m C.G.				
MARK	SIZE	NO.	TYPE	LENGTH
B1	#13	12	STR.	9375
B2	#13	42	1	2060
B3	#13	12	STR.	2310
B4	#13	8	2	1730
B5	#13	6	3	3230
ESTIMATED WT. = 258.1 kg				

6.0 m C.G.				
B1	#13	12	STR.	6325
B2	#13	28	1	2060
B3	#13	6	STR.	2310
B4	#13	4	2	1730
B5	#13	6	3	3230
ESTIMATED WT. = 172.8 kg				

9.6 m C.G.				
B1	#13	12	STR.	9980
B2	#13	44	1	2060
B3	#13	18	STR.	2310
B4	#13	12	2	1730
B5	#13	6	3	3230
ESTIMATED WT. = 290.3 kg				

7.2 m C.G.				
B1	#13	12	STR.	7545
B2	#13	34	1	2060
B3	#13	6	STR.	2310
B4	#13	4	2	1730
B5	#13	6	3	3230
ESTIMATED WT. = 199.6 kg				

10.8 m C.G.				
B1	#13	12	STR.	11200
B2	#13	50	1	2060
B3	#13	12	STR.	2310
B4	#13	8	2	1730
B5	#13	6	3	3230
ESTIMATED WT. = 296.6 kg				

12.0 m C.G.				
B1	#13	12	STR.	12420
B2	#13	54	1	2060
B3	#13	18	STR.	2310
B4	#13	12	2	1730
B5	#13	6	3	3230
ESTIMATED WT. = 339.7 kg				

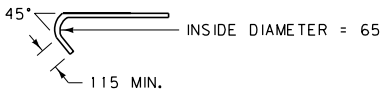

BENT BARS
(TYPES 1 AND 2)

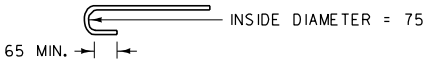

B1 AND B3 STRAIGHT BARS

REBAR DETAILS

NOTES:

C.G. = CATTLE GUARD (METRIC C.G. SIZES ARE NOMINAL.)

CONCRETE QUANTITIES WERE FIGURED WITHOUT A CROWN, INCREASE WHEN A CROWNED INSTALLATION IS USED.

ESTIMATED CLASS "A" CONC. QUANTITIES
4.8 m C.G. = 3.64 m³
6.0 m C.G. = 4.35 m³
7.2 m C.G. = 5.05 m³
9.0 m C.G. = 6.51 m³
9.6 m C.G. = 7.25 m³
10.8 m C.G. = 7.57 m³
12.0 m C.G. = 8.66 m³

ALL DIMENSIONS ARE MILLIMETERS (mm) UNLESS OTHERWISE NOTED.

DETAILED DRAWING

REFERENCE STANDARD SPEC. SECTION 611

DWG. NO. 611-05

CAST-IN-PLACE CATTLE GUARD REBAR DETAILS

EFFECTIVE: FEBRUARY 2005

serving you with pride

MONTANA DEPARTMENT OF TRANSPORTATION

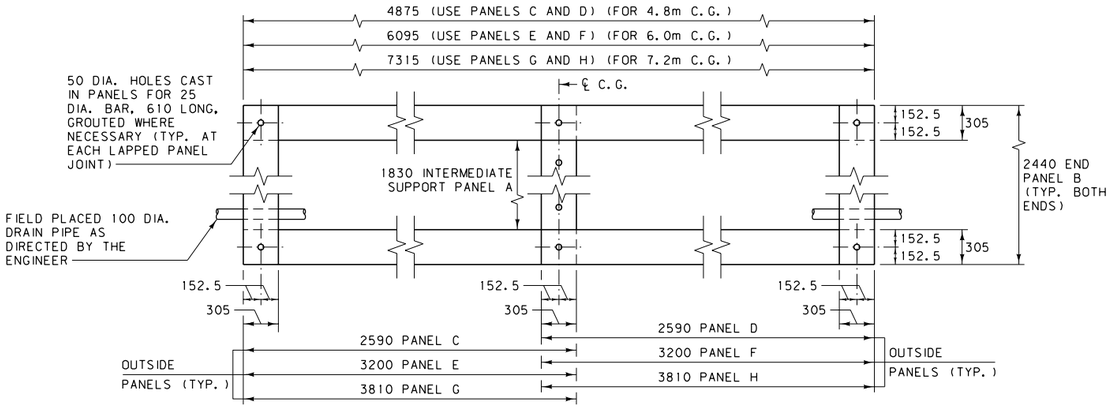

TYPICAL PLAN VIEW

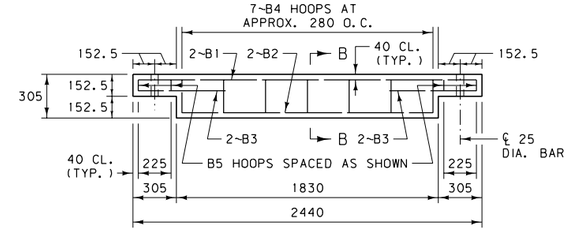

END PANEL B ELEVATION

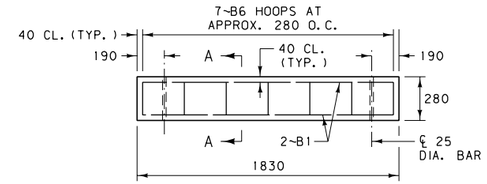

INTERMEDIATE SUPPORT PANEL A ELEVATION

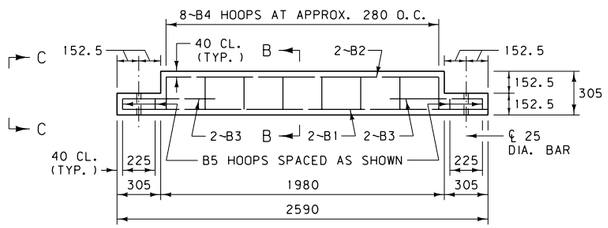

PANEL C ELEVATION

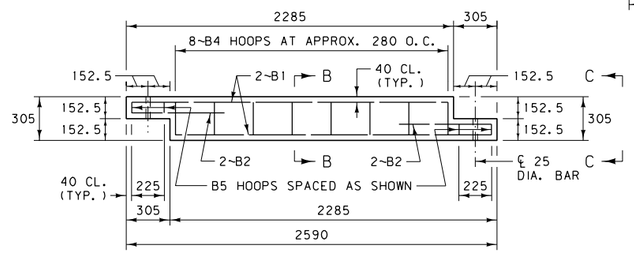

PANEL D ELEVATION

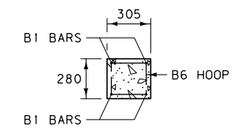

SECTION A-A

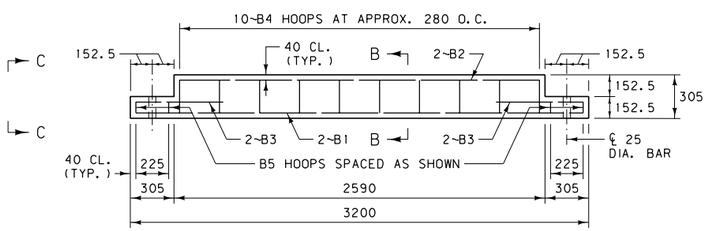

PANEL E ELEVATION

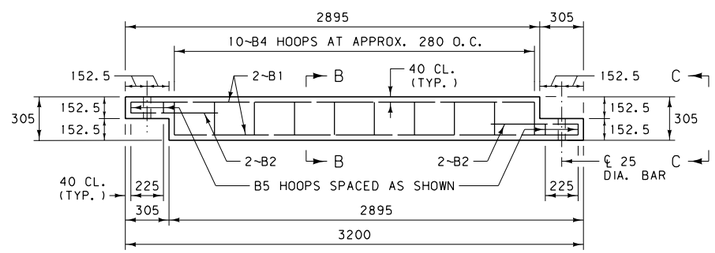

PANEL F ELEVATION

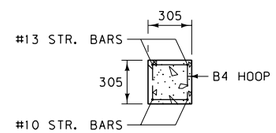

SECTION B-B

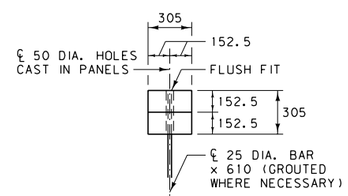

VIEW C-C

(TYP. LAPPED PANEL JOINT)

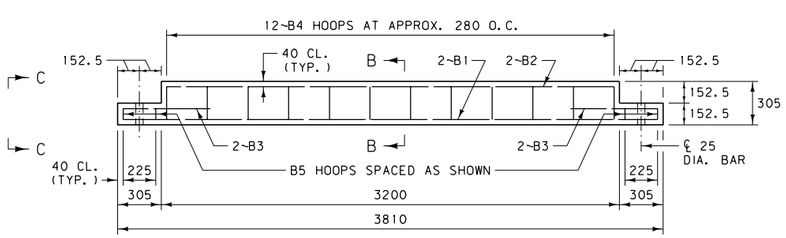

PANEL G ELEVATION

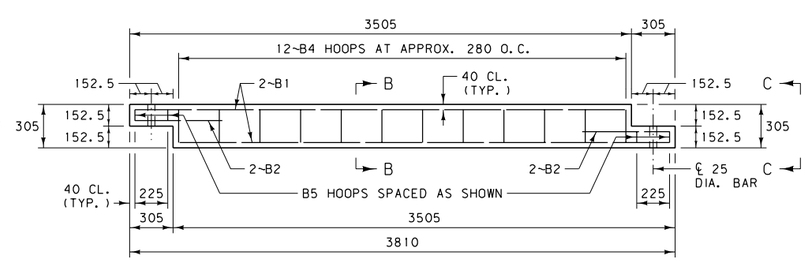

PANEL H ELEVATION

BILL OF REINFORCING STEEL *

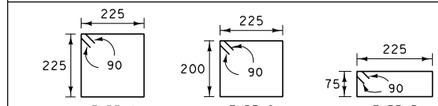

STRAIGHT BARS & BENT BARS (ALL DIMENSIONS OUT TO OUT)

MARK	SIZE	NO.	TYPE	LENGTH
1830 SECTION - PANEL A				
B1	#13	4	STRAIGHT	1750
B6	#10	7	2	1030
ESTIMATED WT. = 11.0 kg				
2440 SECTION - PANEL B				
B1	#13	2	STRAIGHT	2360
B2	#13	2	STRAIGHT	1750
B3	#13	4	STRAIGHT	660
B4	#10	7	1	1080
B5	#10	4	3	780
ESTIMATED WT. = 16.8 kg				
2590 SECTION - PANEL C				
B1	#13	2	STRAIGHT	2510
B2	#13	2	STRAIGHT	1900
B3	#13	4	STRAIGHT	660
B4	#10	8	1	1080
B5	#10	4	3	780
ESTIMATED WT. = 18.0 kg				
2590 SECTION - PANEL D				
B1	#13	4	STRAIGHT	2205
B2	#13	4	STRAIGHT	660
B4	#10	8	1	1080
B5	#10	4	3	780
ESTIMATED WT. = 18.0 kg				
3200 SECTION - PANEL E				
B1	#13	2	STRAIGHT	3120
B2	#13	2	STRAIGHT	2510
B3	#13	4	STRAIGHT	660
B4	#10	10	1	1080
B5	#10	4	3	780
ESTIMATED WT. = 21.6 kg				
3200 SECTION - PANEL F				
B1	#13	4	STRAIGHT	2815
B2	#13	4	STRAIGHT	660
B4	#10	10	1	1080
B5	#10	4	3	780
ESTIMATED WT. = 21.6 kg				
3810 SECTION - PANEL G				
B1	#13	2	STRAIGHT	3730
B2	#13	2	STRAIGHT	3120
B3	#13	4	STRAIGHT	660
B4	#10	12	1	1080
B5	#10	4	3	780
ESTIMATED WT. = 25.2 kg				
3810 SECTION - PANEL H				
B1	#13	4	STRAIGHT	3425
B2	#13	4	STRAIGHT	660
B4	#10	12	1	1080
B5	#10	4	3	780
ESTIMATED WT. = 25.2 kg				

* FOR ONE PANEL ONLY

ESTIMATED CLASS "D" CONCRETE QUANTITIES
1830 SECTION - PANEL A = 0.16 m³
2440 SECTION - PANEL B = 0.20 m³
2590 SECTION - PANEL C = 0.21 m³
2590 SECTION - PANEL D = 0.21 m³
3200 SECTION - PANEL E = 0.27 m³
3200 SECTION - PANEL F = 0.27 m³
3810 SECTION - PANEL G = 0.33 m³
3810 SECTION - PANEL H = 0.33 m³

ALL DIMENSIONS ARE MILLIMETERS (mm) UNLESS OTHERWISE NOTED.

NOTES:

C.G. = CATTLE GUARD. (METRIC C.G. SIZES ARE NOMINAL)

USE ONLY ON FIELD OR PRIVATE APPROACHES.

PROVIDE CAST-IN ANCHOR BOLTS AS SHOWN IN DTL. DWG. NO. 611-00 AT THE APPROPRIATE LOCATIONS. CAST-IN LAG PLATES, SIMILAR TO THOSE SHOWN IN DTL. DWG. NO. 611-15, MAY ALSO BE USED.

FOR DETAILS OF STEEL GRATES AND STEEL WINGS SEE DTL. DWG. NO. 611-00.

DETAILED DRAWING

REFERENCE STANDARD SPEC. SECTION 611

DWG. NO. 611-10

PRECAST CONCRETE BASE FOR CATTLE GUARD - APPROACHES

EFFECTIVE: FEBRUARY 2005

MDT serving you with pride — MONTANA DEPARTMENT OF TRANSPORTATION

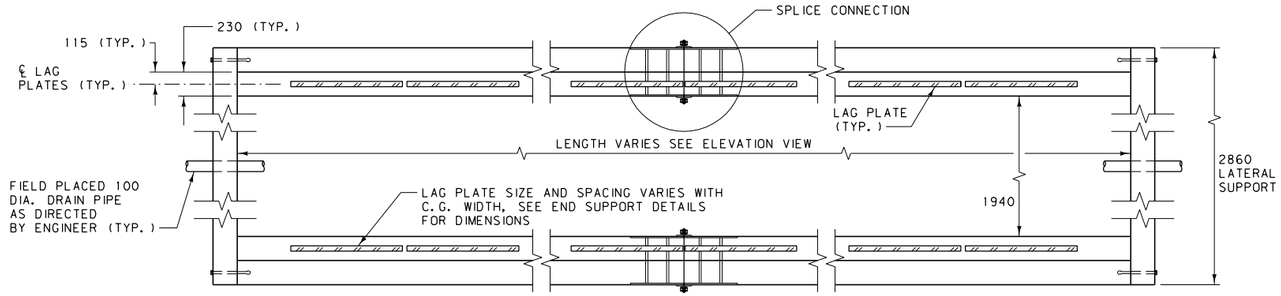

PLAN VIEW

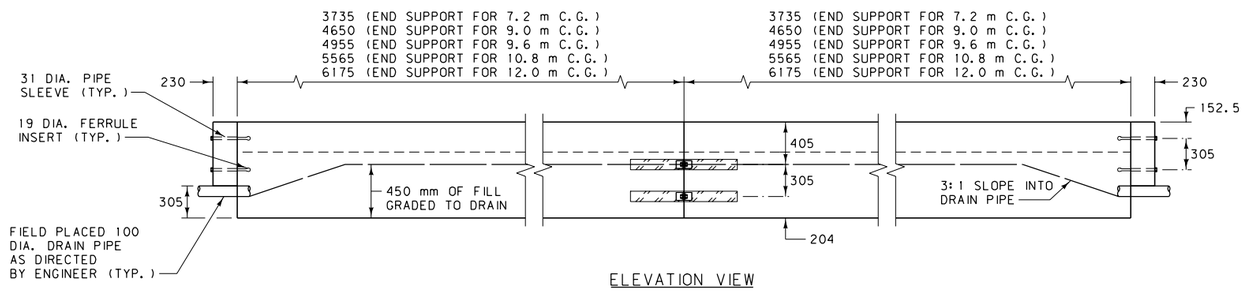

ELEVATION VIEW

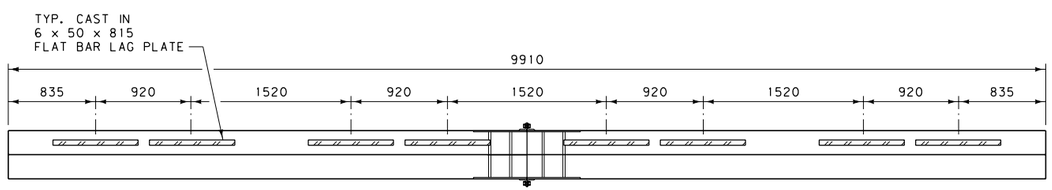

9.6 m C.G. END SUPPORT DETAIL

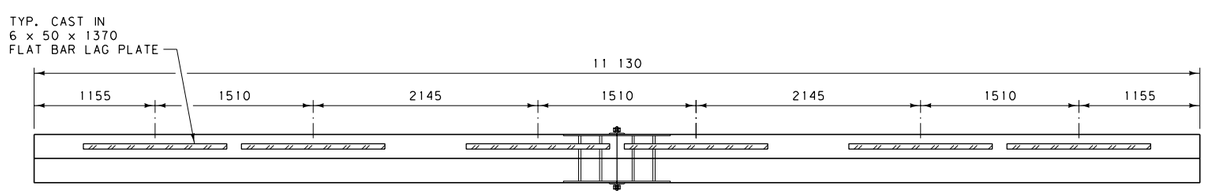

10.8 m C.G. END SUPPORT DETAIL

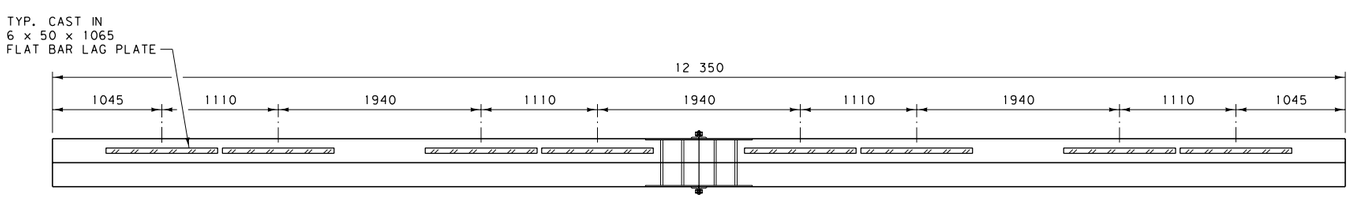

12.0 m C.G. END SUPPORT DETAIL

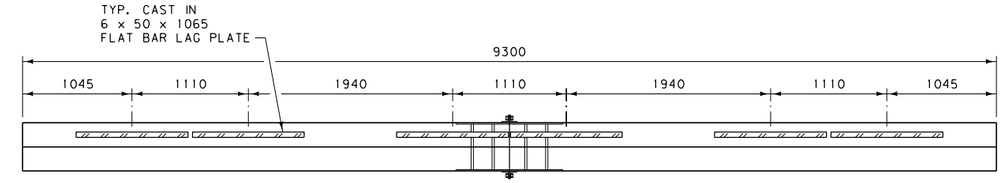

9.0 m C.G. END SUPPORT DETAIL

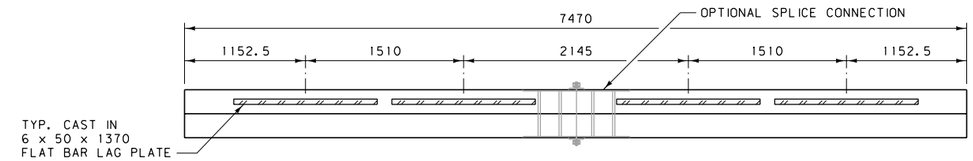

7.2 m C.G. END SUPPORT DETAIL

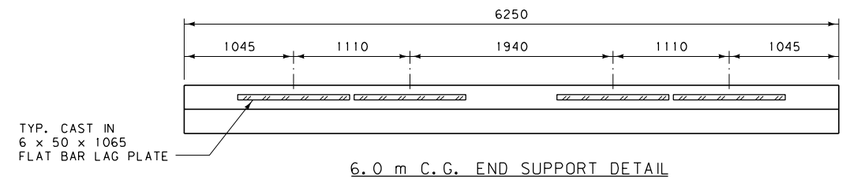

6.0 m C.G. END SUPPORT DETAIL

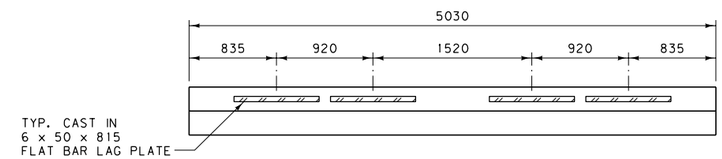

4.8 m C.G. END SUPPORT DETAIL

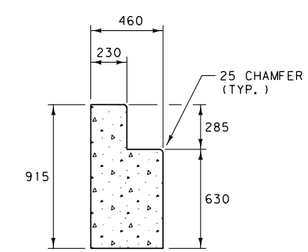

END SUPPORT SECTION VIEW

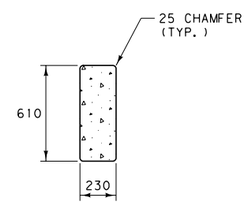

LATERAL SUPPORT SECTION VIEW

NOTES:

C.G. = CATTLE GUARD (METRIC C.G. SIZES ARE NOMINAL.)

USE SPLICE CONNECTIONS WHEN A CROWNED INSTALLATION IS REQUIRED.

SEE DTL. DWG. NO. 611-20 FOR ADDITIONAL PRE-CAST CONCRETE CATTLE GUARD BASE AND MATERIAL QUANTITY DETAILS.

SEE DTL. DWG. NO. 611-00 FOR DETAILS OF STEEL GRATES AND STEEL WINGS.

INSTALLATION PROCEDURE:

EXCAVATE 600 mm BELOW THE ELEVATION OF THE BOTTOM OF THE CATTLE GUARD BASE. EXTEND THE EXCAVATION HORIZONTALLY AT LEAST 300 mm IN ALL DIRECTIONS BEYOND THE CATTLE GUARD BASE'S EXTERIOR DIMENSION.

FILL THE EXCAVATION TO THE LEVEL OF THE BOTTOM OF THE CATTLE GUARD BASE WITH FILL MATERIAL OF AASHTO GRADE A-1-a OR BETTER, COMPACTED TO 95% OF PROCTOR DENSITY.

AFTER PLACING THE CATTLE GUARD, FILL THE EXTERIOR PORTION OF THE EXCAVATION TO GRADE WITH THE SAME MATERIAL.

FILL THE INTERIOR OF THE CATTLE GUARD BASE TO A DEPTH OF 450 mm WITH THE SIMILARLY COMPACTED MATERIAL.

ALL DIMENSIONS ARE MILLIMETERS (mm) UNLESS OTHERWISE NOTED.

DETAILED DRAWING	
REFERENCE STANDARD SPEC. SECTION 611	DWG. NO. 611-15
PRECAST CONCRETE BASE FOR CATTLE GUARD	
EFFECTIVE: FEBRUARY 2005	
serving you with pride	MONTANA DEPARTMENT OF TRANSPORTATION

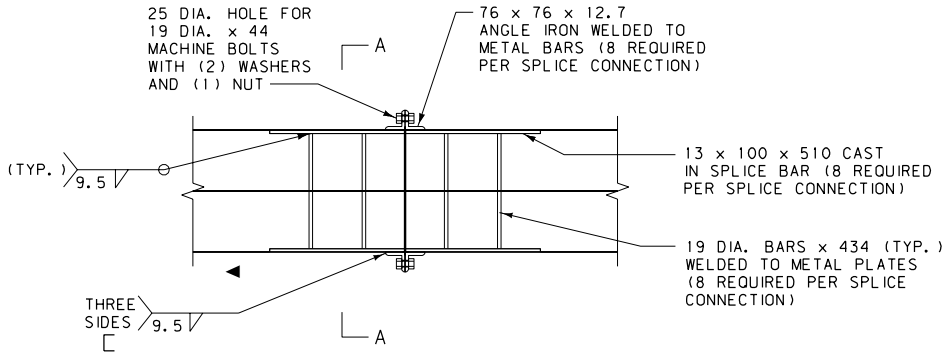

SPLICE CONNECTION DETAIL

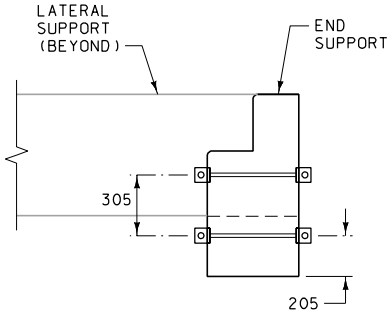

END SUPPORT SECTION A-A

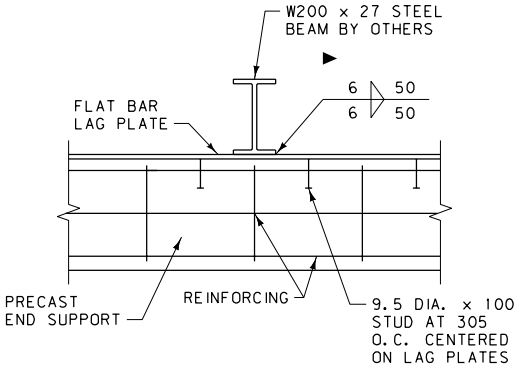

LAG PLATE CONNECTION DETAIL

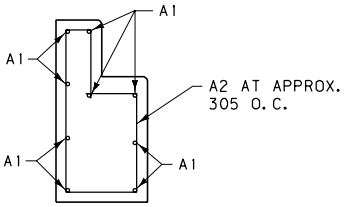

END SUPPORT REBAR DETAIL

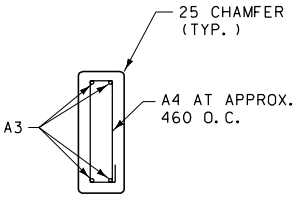

LATERAL SUPPORT REBAR DETAIL

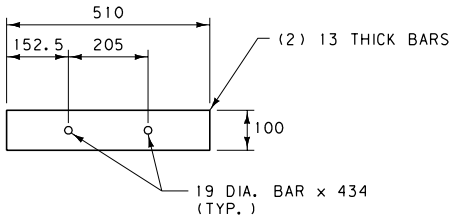

SPLICE BAR DETAIL

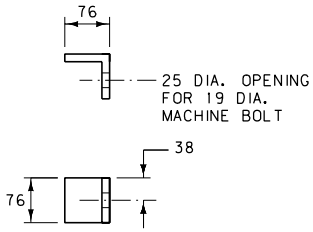

ANGLE IRON DETAIL

NOTE: ALL REBAR DIMENSIONS ARE OUT TO OUT.

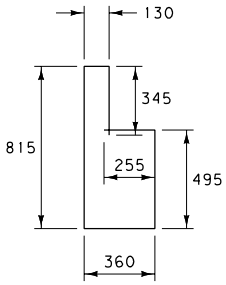

TYPE A2

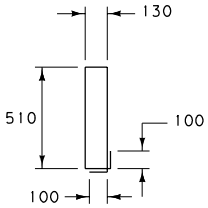

TYPE A4

REINFORCING STEEL

ESTIMATED CLASS "DD" CONCRETE QUANTITIES
4.8 m C.G. = 4.34 m³
6.0 m C.G. = 5.21 m³
7.2 m C.G. = 6.06 m³
* 7.2 m C.G. = 6.06 m³
9.0 m C.G. = 7.36 m³
9.6 m C.G. = 7.78 m³
10.8 m C.G. = 8.65 m³
12.0 m C.G. = 9.50 m³

NOTES:

C.G. = CATTLE GUARD (METRIC C.G. SIZES ARE NOMINAL.)

ALL HARDWARE IS TO BE PRIMER PAINTED.

ALL STEEL HARDWARE IS TO CONFORM TO AASHTO M270M GRADE 250.

ALL NUTS, BOLTS, AND WASHERS ARE TO CONFORM TO ASTM A307M AND BE GALVANIZED PER AASHTO M232M.

QUANTITIES AND DIMENSIONS ARE APPROXIMATE ONLY BASED ON ONE COMPLETE CATTLE GUARD.

NOMINAL C.G. SIZE	REINFORCING STEEL (NO. 13 BARS / GRADE 420)									MISC. STEEL			
	A1		A2		A3		A4		ESTIMATED WT.	LAG PLATES		SPLICE CONNECTION	ESTIMATED WT.
	REQUIRED	LENGTH	REQUIRED	LENGTH	REQUIRED	LENGTH	REQUIRED	LENGTH	kg.	REQUIRED	LENGTH		kg.
4.8 m	18	4930	36	2390	8	2780	14	1475	216.4	8	815	NO	17.7
6.0 m	18	6150	44	2390	8	2780	14	1475	257.2	8	1065	NO	23.6
7.2 m	18	7370	52	2390	8	2780	14	1475	298.0	8	1370	NO	29.9
* 7.2 m	36	3635	52	2390	8	2780	14	1475	296.2	8	1370	YES	146.5
9.0 m	36	4550	64	2390	8	2780	14	1475	357.4	12	1065	YES	151.5
9.6 m	36	4855	68	2390	8	2780	14	1475	377.8	16	815	YES	152.0
10.8 m	36	5465	76	2390	8	2780	14	1475	418.7	12	1370	YES	161.5
12.0 m	36	6075	84	2390	8	2780	14	1475	459.5	16	1065	YES	163.3

* 7.2 m CATTLE GUARD WITH OPTIONAL SPLICE

ALL DIMENSIONS ARE MILLIMETERS (mm) UNLESS OTHERWISE NOTED.

DETAILED DRAWING

REFERENCE STANDARD SPEC. SECTION 611

DWG. NO. 611-20

PRECAST CONCRETE CATTLE GUARD BASE DETAILS

EFFECTIVE: FEBRUARY 2005

MDT serving you with pride — MONTANA DEPARTMENT OF TRANSPORTATION

ROUND PIPE

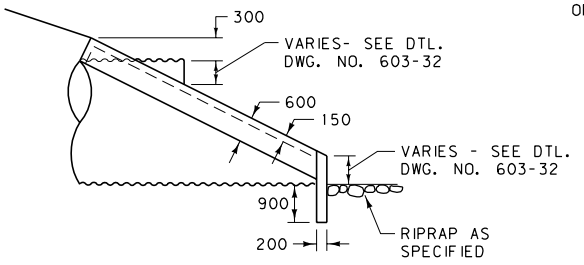

SIDE ELEVATION

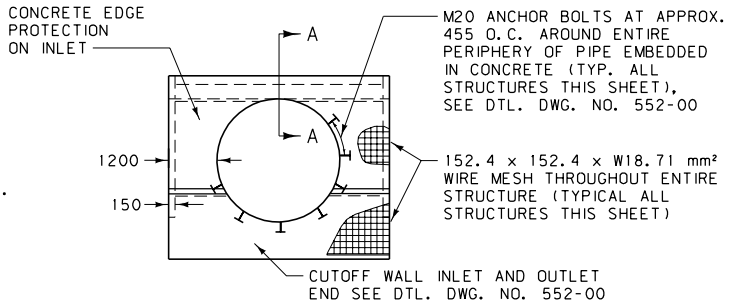

FRONT ELEVATION

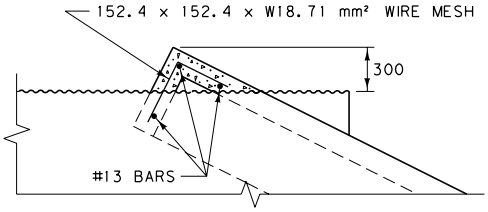

SECTION A-A

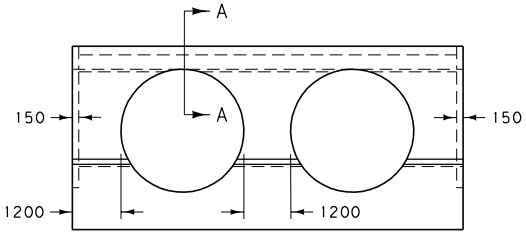

FRONT ELEVATION MULTIPLE PIPES

ARCH PIPE

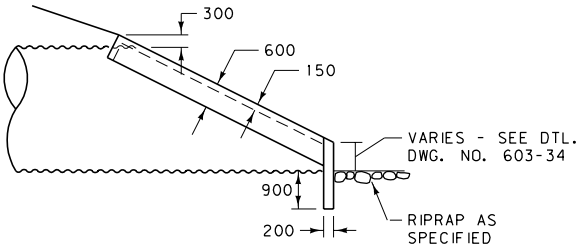

SIDE ELEVATION

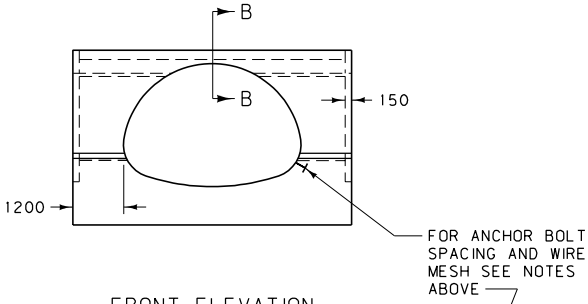

FRONT ELEVATION

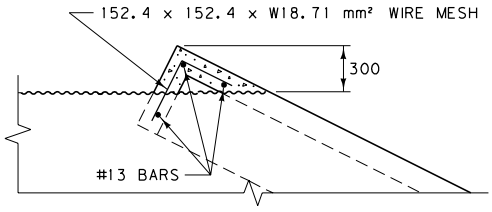

SECTION B-B

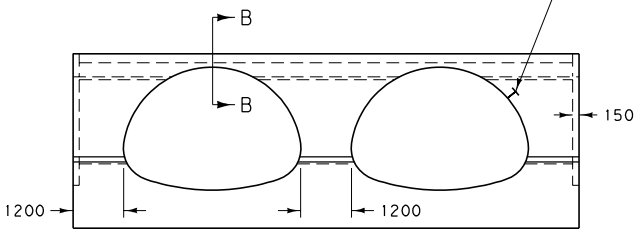

FRONT ELEVATION MULTIPLE PIPES

NOTE:
ALL CONCRETE IS CLASS "DD" OR EQUAL.

ALL DIMENSIONS ARE MILLIMETERS (mm) UNLESS OTHERWISE NOTED.

DETAILED DRAWING	
REFERENCE STANDARD SPEC. SECTION 613	DWG. NO. 613-06
CONCRETE EDGE PROTECTION FOR METAL CULVERTS	
EFFECTIVE: FEBRUARY 2005	
serving you with pride	MONTANA DEPARTMENT OF TRANSPORTATION

ROUND PIPE

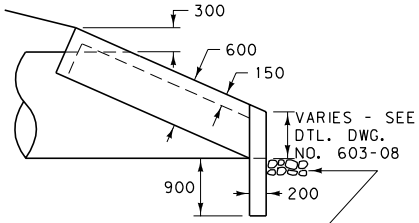

SIDE ELEVATION

RIPRAP AS SPECIFIED

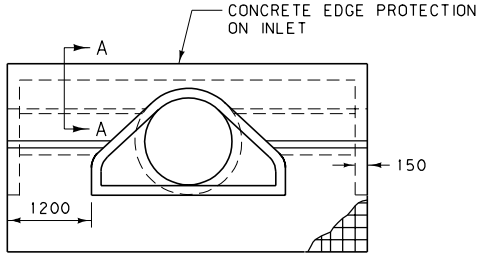

FRONT ELEVATION

ARCH PIPE

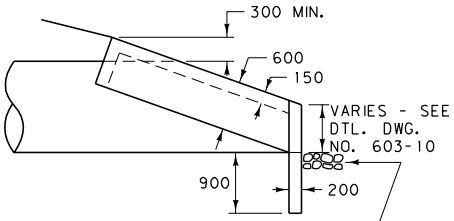

SIDE ELEVATION

RIPRAP AS SPECIFIED

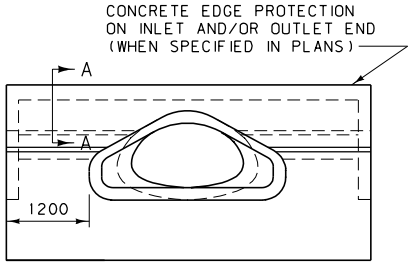

FRONT ELEVATION

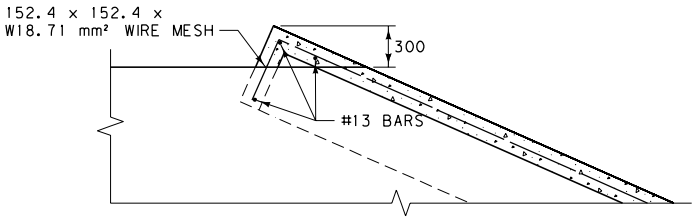

SECTION A-A

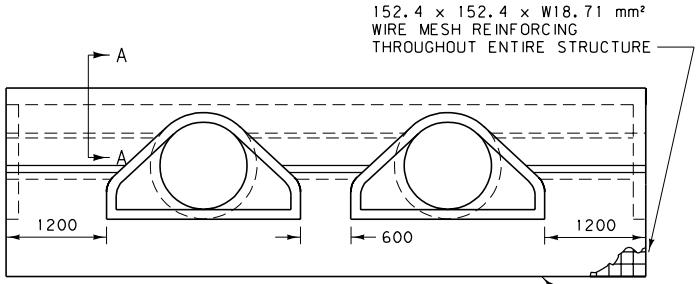

FRONT ELEVATION MULTIPLE PIPES

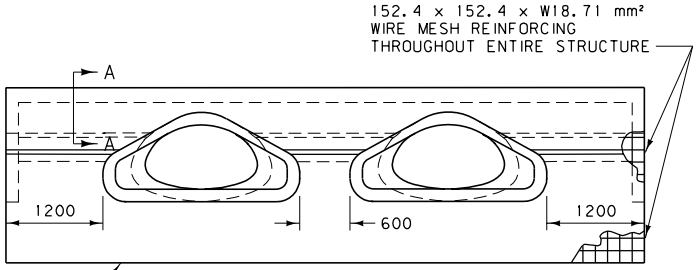

FRONT ELEVATION MULTIPLE PIPES

CUTOFF WALL INLET AND OUTLET END SEE DTL. DWG. NO. 552-00 (WHEN SPECIFIED IN PLANS)

NOTES:
ALL CONCRETE IS CLASS "DD" OR EQUAL.

ALL DIMENSIONS ARE MILLIMETERS (mm) UNLESS OTHERWISE NOTED.

DETAILED DRAWING	
REFERENCE STANDARD SPEC. SECTION 603, 613	DWG. NO. 613-08
CONCRETE EDGE PROTECTION FOR CONCRETE CULVERTS	
EFFECTIVE: FEBRUARY 2005	
serving you with pride — MONTANA DEPARTMENT OF TRANSPORTATION	

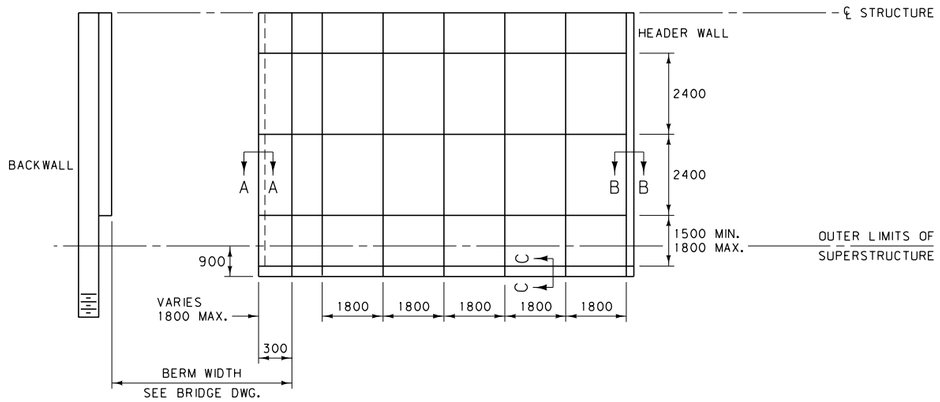

STRAIGHT STRUCTURE

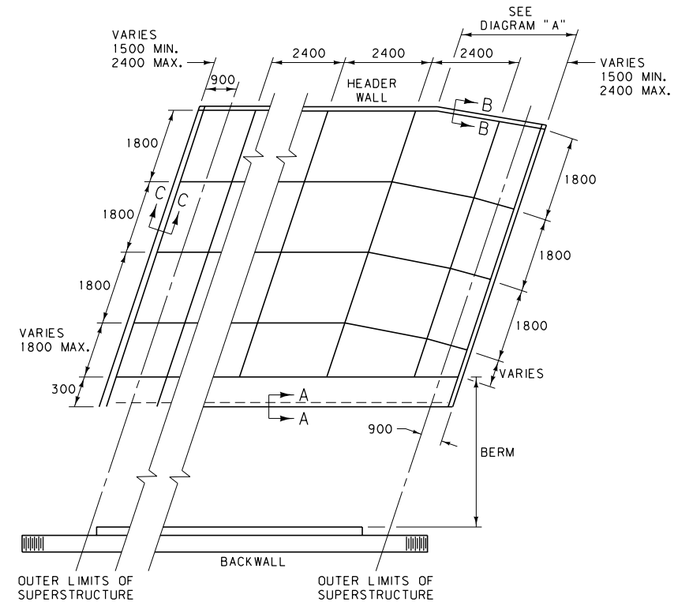

SKEWED STRUCTURE

CAST-IN-PLACE CONCRETE:

LOCATE JOINTS AS INDICATED ON THE PLANS. IF CONSTRUCTION IS STOPPED FOR OVER TWO HOURS, CREATE A CONSTRUCTION JOINT. USE CLASS "D" CONCRETE FOR ALL CAST-IN-PLACE CONCRETE.

USE AN APPROVED 13 mm EXPANSION JOINT FILLER WHENEVER THE CAST-IN-PLACE CONCRETE ABUTS AGAINST ANY PART OF THE BRIDGE STRUCTURE.

CLEAR THE EMBANKMENT SLOPE OF ALL BRUSH, DEBRIS AND RUBBLE. A CUSHION IS NOT REQUIRED FOR GRAVEL EMBANKMENT SLOPES. FINISH ALL SLOPES TO A REASONABLY UNIFORM SURFACE OR TO THE SLOPE INDICATED IN THE BRIDGE PLANS. COMPACT ALL LOOSE MATERIAL TO THE SATISFACTION OF THE ENGINEER. LEAVE THE ADJACENT SLOPE AREA IN A SMOOTH, UNIFORM CONDITION.

REINFORCING STEEL:

(MAY USE EITHER ALTERNATE LISTED BELOW)

1. #10 BARS AT 250 O.C. (HORIZONTAL AND VERTICAL SPACING) MIN. COVER OF 50 mm
2. 152.4 x 152.4 x W18.71 mm² WIRE MESH

300 mm OVERLAP REQUIRED AT CONSTRUCTION JOINTS FOR REINFORCING STEEL AND WIRE MESH.

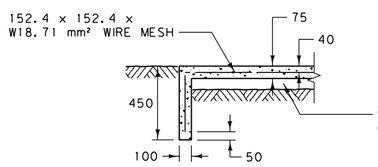

SECTION A-A

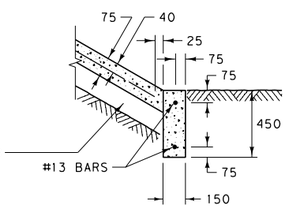

SECTION B-B
HEADER WALL

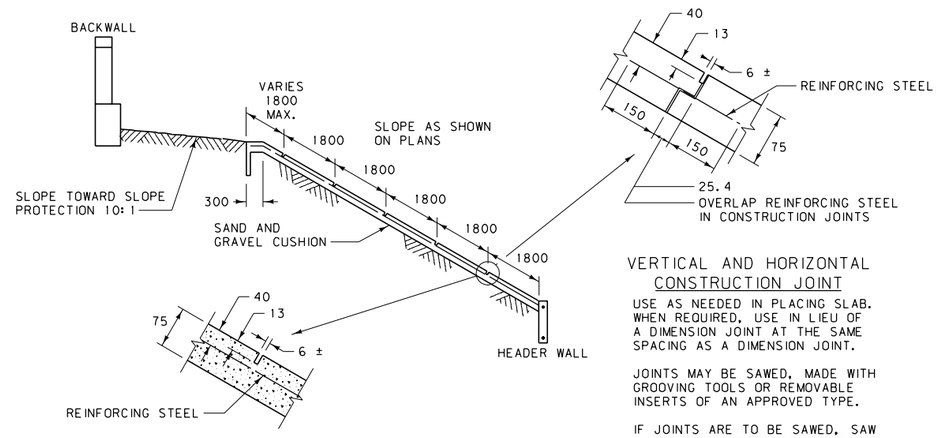

VERTICAL AND HORIZONTAL
CONSTRUCTION JOINT

USE AS NEEDED IN PLACING SLAB. WHEN REQUIRED, USE IN LIEU OF A DIMENSION JOINT AT THE SAME SPACING AS A DIMENSION JOINT.

JOINTS MAY BE SAWED, MADE WITH GROOVING TOOLS OR REMOVABLE INSERTS OF AN APPROVED TYPE.

IF JOINTS ARE TO BE SAWED, SAW JOINTS JUST AFTER CONCRETE HAS SET BUT BEFORE UNCONTROLLED CRACKING OCCURS.

VERTICAL AND HORIZONTAL
DIMENSION JOINT

1800 mm VERTICAL SPACING OR AS NOTED. 2400 mm HORIZONTAL SPACING OR AS NOTED. JOINTS MAY BE SAWED, MADE WITH GROOVING TOOLS OR REMOVABLE INSERTS OF AN APPROVED TYPE.

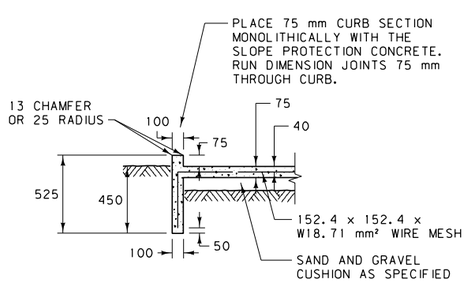

SECTION C-C

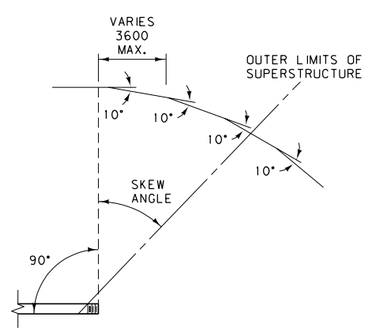

DIAGRAM "A"

ALL DIMENSIONS ARE MILLIMETERS (mm) UNLESS OTHERWISE NOTED.

DETAILED DRAWING	
REFERENCE STANDARD SPEC. SECTION 613	DWG. NO. 613-10
CONCRETE SLOPE PROTECTION	
EFFECTIVE: FEBRUARY 2005	

MDT serving you with pride — MONTANA DEPARTMENT OF TRANSPORTATION

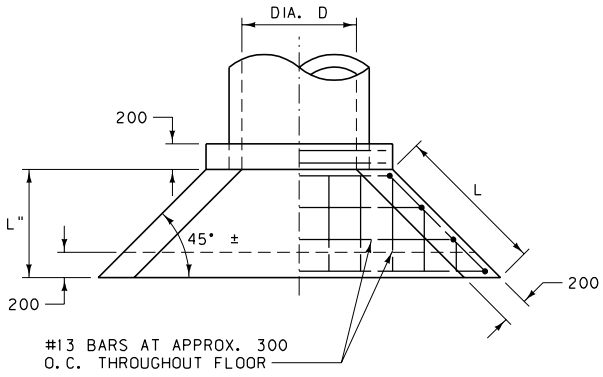

PLAN

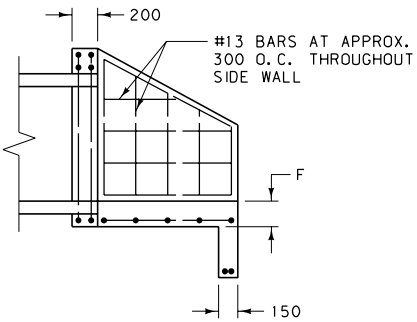

SECTION B-B

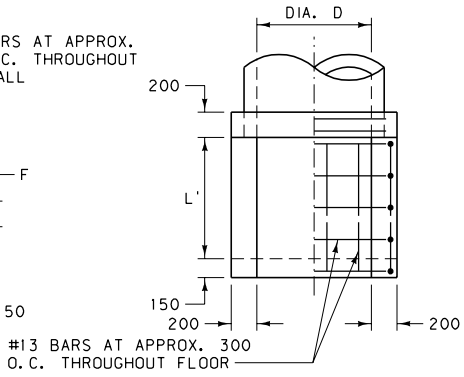

PLAN

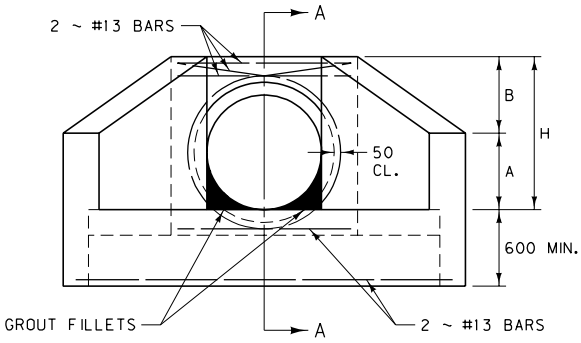

ELEVATION

INLET HEADWALL

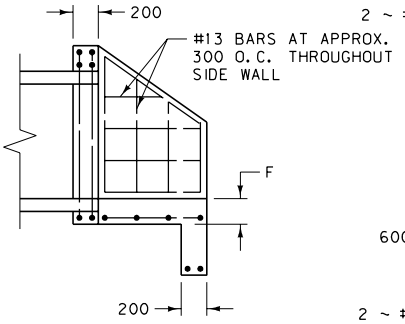

SECTION A-A

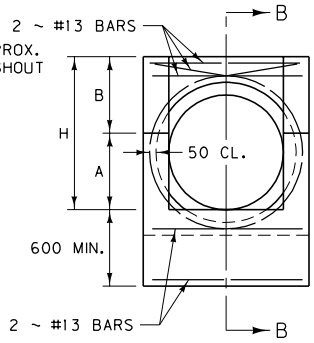

ELEVATION

OUTLET HEADWALL

CHAMFER ALL EXPOSED CORNERS 25 mm. REINFORCING STEEL TO BE NOT LESS THAN 40 mm TO NEAREST FACE OF CONCRETE.

INLET AND OUTLET HEADWALLS FOR RCP										
CULVERT		CL. "DD" CONC. OR EQUAL (m^3)		DIMENSION TABLE						
DIA. D	AREA (m^2)	INLET	OUTLET	A	B	H	L	L"	F	L'
450	0.164	0.7	0.5	400	400	800	750	550	200	650
600	0.292	0.8	0.6	450	450	900	900	650	200	750
750	0.456	1.1	0.8	550	550	1100	1050	750	200	850
900	0.657	1.4	1.0	600	600	1200	1200	850	250	950
1050	0.894	1.7	1.2	700	700	1400	1350	950	250	1050
1200	1.167	2.0	1.4	750	750	1500	1500	1050	250	1150

INLET AND OUTLET HEADWALLS FOR CMP										
CULVERT		CL. "DD" CONC. OR EQUAL (m^3)		DIMENSION TABLE						
DIA. D	AREA (m^2)	INLET	OUTLET	A	B	H	L	L"	F	L'
450	0.159	0.6	0.5	400	400	800	750	550	150	650
600	0.283	0.8	0.6	450	450	900	900	650	150	750
750	0.442	1.1	0.8	550	550	1100	1050	750	150	850
900	0.636	1.3	0.9	600	600	1200	1200	850	150	950
1050	0.866	1.6	1.1	700	700	1400	1350	950	150	1050
1200	1.131	1.8	1.3	750	750	1500	1500	1050	150	1150

ALL DIMENSIONS ARE MILLIMETERS (mm) UNLESS OTHERWISE NOTED.

DETAILED DRAWING

REFERENCE STANDARD SPEC. SECTION 613

DWG. NO. 613-12

INLET AND OUTLET HEADWALLS FOR RCP AND CMP PIPES

EFFECTIVE: FEBRUARY 2005

serving you with pride

MONTANA DEPARTMENT OF TRANSPORTATION

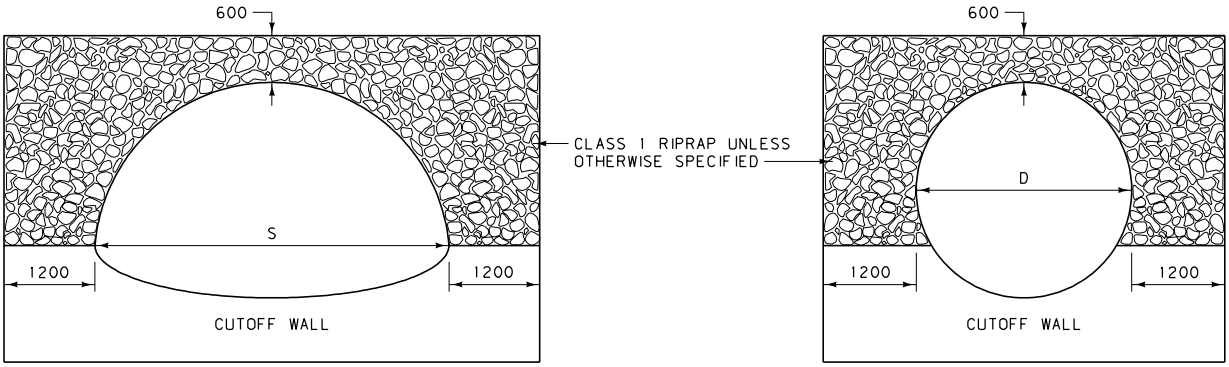

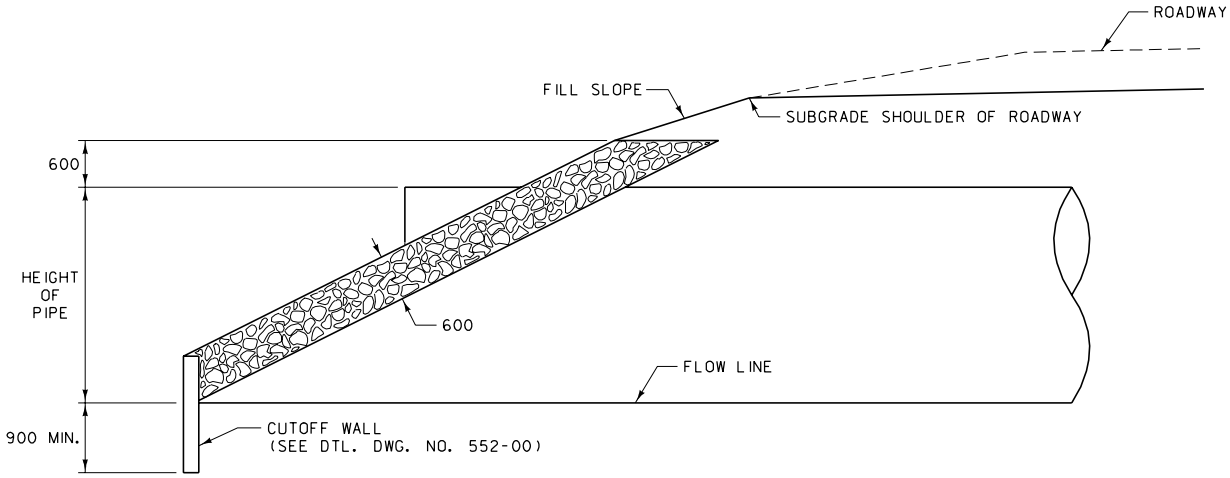

NOTES:

KEY ENDS OF RIPRAP WALLS INTO THE EMBANKMENT SLOPES A MINIMUM OF 600 mm FROM OUTER FACE OF THE RIPRAP FOR THE FULL HEIGHT OF THE RIPRAP WALL.

SEE SPECIFICATIONS FOR GRADATION, CLASS AND CONSTRUCTION METHODS.

ALL DIMENSIONS ARE MILLIMETERS (mm) UNLESS OTHERWISE NOTED.

DETAILED DRAWING	
REFERENCE STANDARD SPEC. SECTION 613	DWG. NO. 613-14
CULVERT RIPRAP	
EFFECTIVE: FEBRUARY 2005	
serving you with pride	MONTANA DEPARTMENT OF TRANSPORTATION

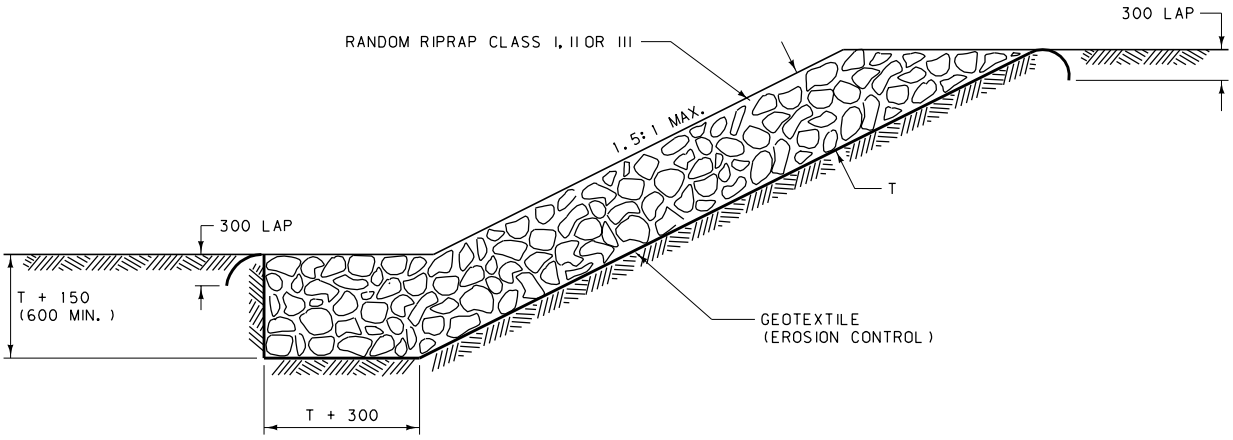

EMBANKMENT PROTECTION

MINIMUM T FOR:
CLASS I RIPRAP = 450
CLASS II RIPRAP = 750
CLASS III RIPRAP = 900

ALL DIMENSIONS ARE MILLIMETERS (mm) UNLESS OTHERWISE NOTED.

DETAILED DRAWING	
REFERENCE STANDARD SPEC. SECTION 613, 622	DWG. NO. 613-16
EMBANKMENT PROTECTION	
EFFECTIVE: FEBRUARY 2005	
serving you with pride	MONTANA DEPARTMENT OF TRANSPORTATION

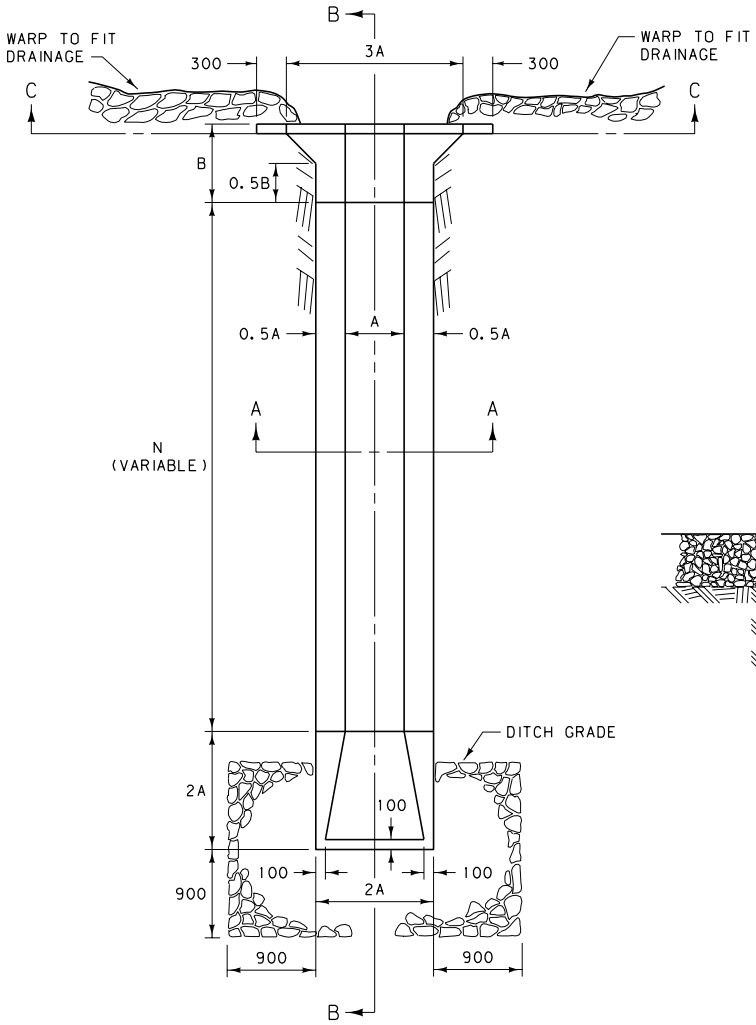

CONCRETE:

USE CLASS "AC" OR "DC" CONCRETE UNLESS OTHERWISE NOTED, CONFORMING TO SECTION 551 OF THE STANDARD SPECIFICATIONS. CONCRETE MAY BE PNEUMATICALLY APPLIED.

✱ BANK PROTECTION:

USE TYPE III BANK PROTECTION, CONFORMING TO SUBSECTION 613.03.2 OF THE STANDARD SPECIFICATIONS. THICKNESS IS 300 mm MIN.

INLET CONDITIONS:

DEPRESS THE INLET BELOW THE NATURAL DRAINAGE BASIN TO PREVENT FLOW FROM SIDE CHANNELING OVER THE SLOPE BEFORE REACHING THE CHUTE.

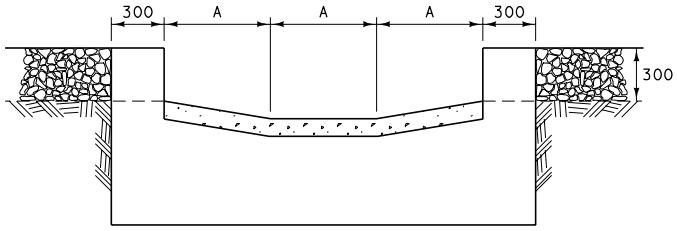

SECTION C-C

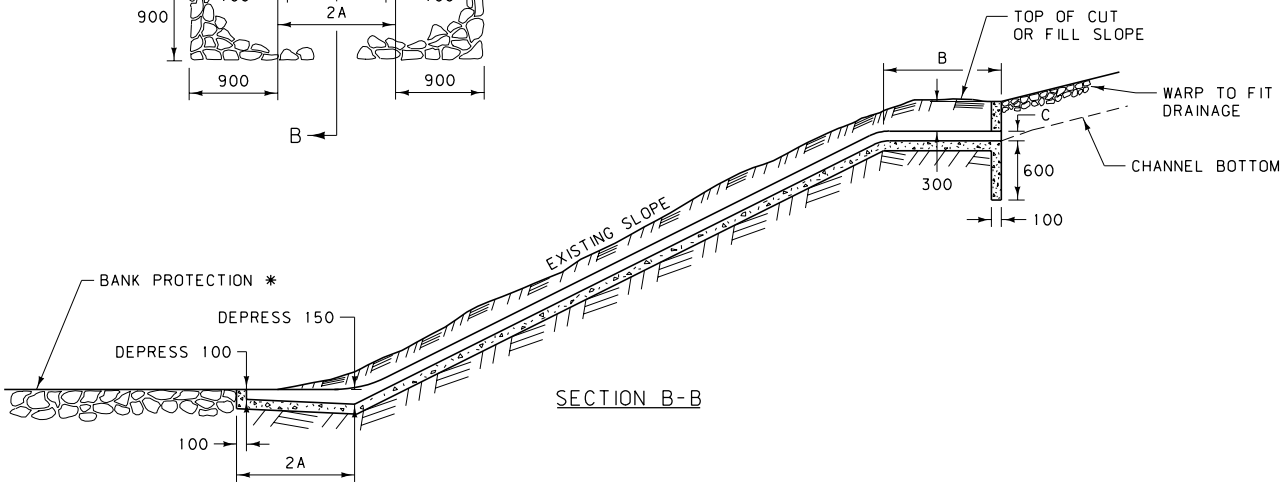

SECTION B-B

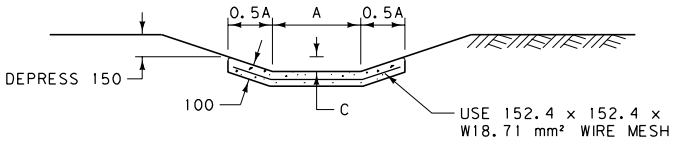

SECTION A-A

TYPE	DIMENSIONS			QUANTITIES
	A	B	C	CONCRETE
1	600	1200	100	0.49 m³ + N x 0.123 m³/m
2	600	1200	300	0.53 m³ + N x 0.143 m³/m
3	1200	2450	300	1.60 m³ + N x 0.254 m³/m
4	1200	2450	450	1.66 m³ + N x 0.269 m³/m

ALL DIMENSIONS ARE MILLIMETERS (mm) UNLESS OTHERWISE NOTED.

DETAILED DRAWING

REFERENCE STANDARD SPEC. SECTION 551, 613

DWG. NO. 613-18

CONCRETE DRAINAGE CHUTE

EFFECTIVE: FEBRUARY 2005

MDT serving you with pride — MONTANA DEPARTMENT OF TRANSPORTATION

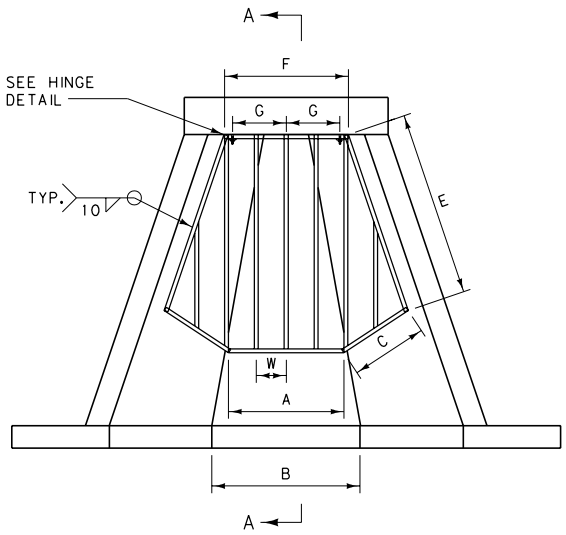

PLAN VIEW

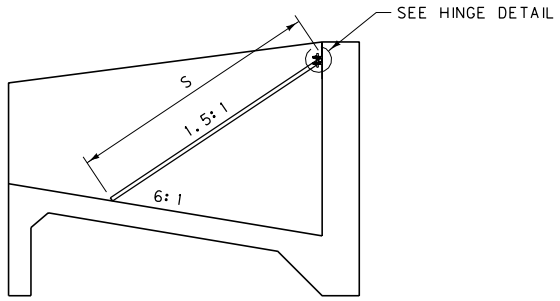

SECTION A-A

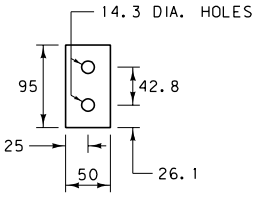

PLATE DETAIL

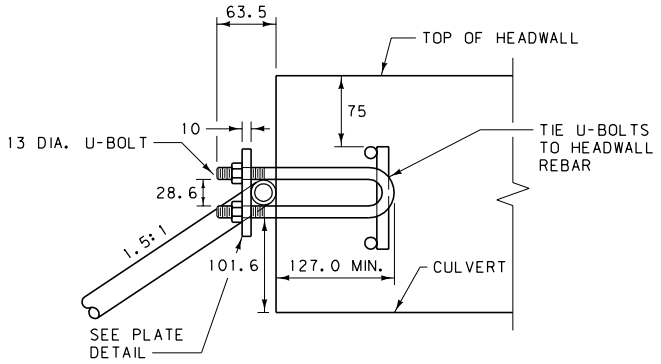

HINGE DETAIL

CSP									
CULVERT DIA. D	DIMENSIONS								19 DIA. GSP *
	B	A	C	E	F	S	W	G	
450	450	363	226	707	244	841	110	70	5956
450	750	601	210	738	244	841	140	82	6160
450	1050	838	195	783	244	841	131	82	7498
600	600	472	326	857	396	1061	152	113	7699
600	900	695	308	887	396	1061	180	140	7983
600	1200	921	293	924	396	1061	155	116	9696
750	750	582	427	1009	549	1280	143	235	11 579
750	1050	677	408	1036	549	1280	165	235	11 378
750	1350	1015	390	1070	549	1280	183	235	11 805
900	900	692	527	1161	701	1500	174	305	13 777
900	1200	1207	509	1186	701	1500	192	305	14 441
900	1500	1113	491	1216	701	1500	171	302	16 203
1050	1050	802	628	1314	853	1719	204	366	15 895
1050	1350	1009	607	1338	853	1719	180	305	18 450
1050	1650	1216	588	1466	853	1719	192	335	18 870
1200	1200	911	725	1466	1006	1942	189	457	20 812
1200	1500	1116	707	1491	1006	1942	201	457	21 068
1200	1800	1320	689	1515	1006	1942	180	457	24 198

NOTES:

PAINT ALL WELDS AND OTHER NON-GALVANIZED PARTS IN ACCORDANCE WITH SECTION 710 OF THE STANDARD SPECIFICATIONS.

W = CENTER TO CENTER PIPE SPACING.

TWO 13 DIA. U-BOLT AND PLATE ASSEMBLIES NEEDED PER TRASHGUARD.

* 19 mm DIA. SCHEDULE 80 GALV. STEEL PIPE (GSP).

RCP									
CULVERT DIA. D	DIMENSIONS								19 DIA. GSP *
	B	A	C	E	F	S	W	G	
450	450	387	244	786	244	933	119	79	6517
450	750	652	226	823	244	933	152	82	6715
450	1050	914	210	875	244	933	140	82	8245
600	600	494	348	954	396	1170	162	122	8382
600	900	750	329	988	396	1170	143	104	10 305
600	1200	997	311	1030	396	1170	168	128	10 561
750	750	619	451	1122	549	1408	152	235	12 479
750	1050	857	430	1155	549	1408	174	235	12 588
750	1350	1094	415	1192	549	1408	159	235	14 768
900	900	735	555	1292	701	1649	183	305	14 883
900	1200	963	533	1323	701	1649	165	290	17 380
900	1500	1195	515	1353	701	1649	183	305	17 468
1050	1050	850	658	1460	853	1887	174	305	19 766
1050	1350	1076	637	1487	853	1887	189	335	20 025
1050	1650	1302	619	1521	853	1887	204	366	20 297
1200	1200	966	759	1631	1006	2125	198	457	22 476
1200	1500	1189	741	1658	1006	2125	177	457	26 018
1200	1800	1411	719	1686	1006	2125	192	457	25 960

DIMENSIONS AND QUANTITIES ARE FOR ESTIMATING PURPOSES ONLY.

ALL DIMENSIONS ARE MILLIMETERS (mm) UNLESS OTHERWISE NOTED.

DETAILED DRAWING

REFERENCE STANDARD SPEC. SECTION 615

DWG. NO. 615-02

TRASHGUARD FOR CONCRETE IRRIGATION INLET AND OUTLET TRANSITION STRUCTURES

EFFECTIVE: FEBRUARY 2005

serving you with pride

MONTANA DEPARTMENT OF TRANSPORTATION

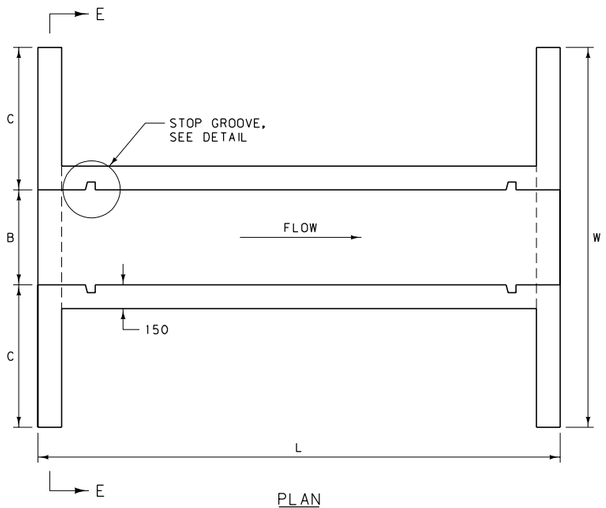

PLAN
TYPE I

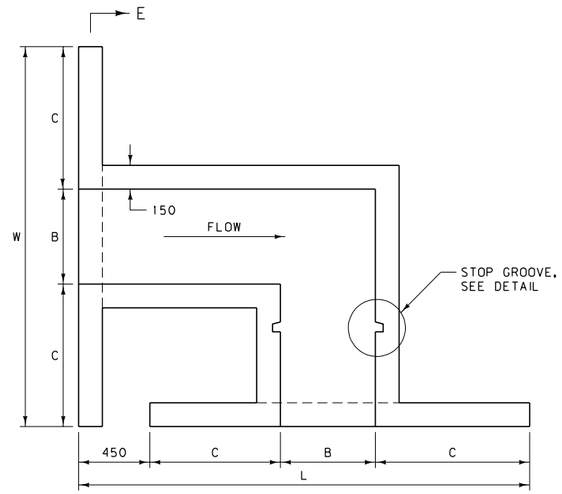

PLAN
TYPE II

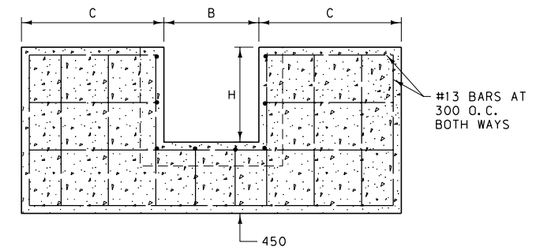

SECTION E-E

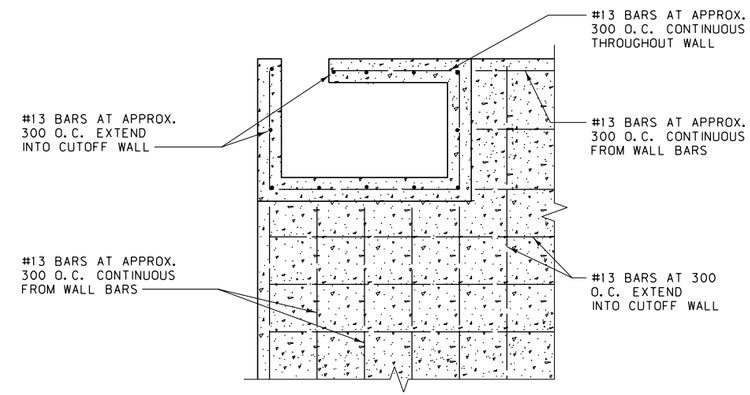

SECTION F-F

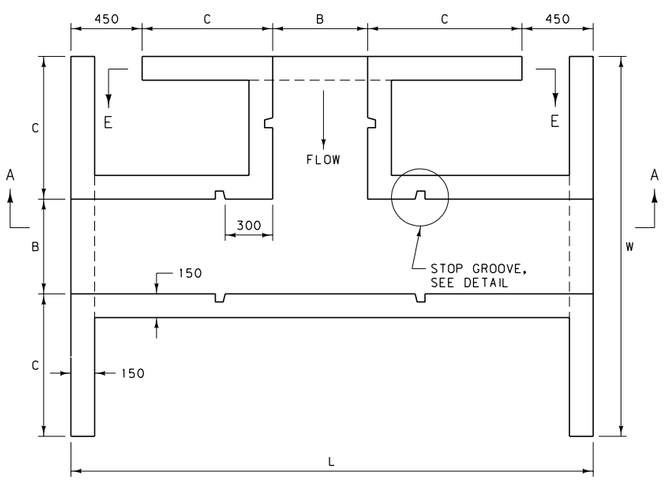

PLAN
TYPE III

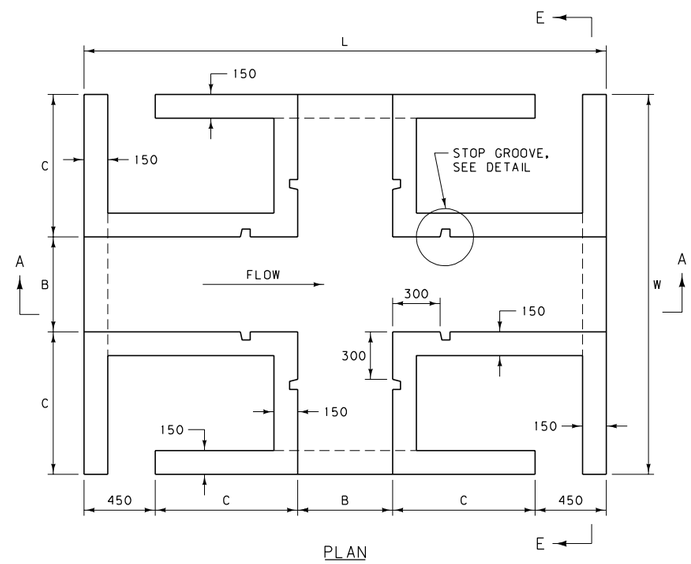

PLAN
TYPE IV

DIMENSIONS AND QUANTITIES							
	B	C	H	L	W	"DD" CONC OR EQUAL (m3)	REINF. STEEL (kg)
TYPE I	600	900	600	1850	2400	1.1	54.7
	750	1050	600	1850	2850	1.3	60.7
	900	1200	750	1850	3300	1.6	80.2
TYPE II	600	900	600	2850	2400	1.4	69.8
	750	1050	600	3300	2850	1.8	84.2
	900	1200	750	3750	3300	2.4	118.1
TYPE III	600	900	600	3300	2400	2.0	98.7
	750	1050	600	3750	2850	2.5	117.6
	900	1200	750	4200	3300	3.3	164.3
TYPE IV	600	900	600	3300	2400	2.5	121.1
	750	1050	600	3750	2850	3.0	144.4
	900	1200	750	4200	3300	4.1	201.9

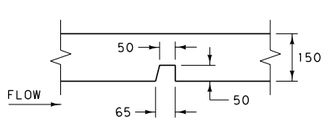

STOP GROOVE DETAIL

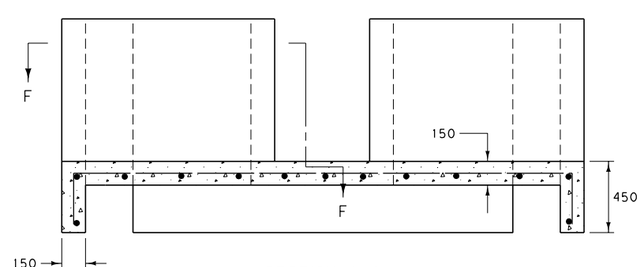

SECTION A-A

NOTES:

DIVISION BOX MAY BE MODIFIED IF DESIRED WITH DIMENSIONS SHOWN ON THE PLANS.

QUANTITIES ARE FOR ESTIMATING PURPOSES ONLY.

ALL DIMENSIONS ARE MILLIMETERS (mm) UNLESS OTHERWISE NOTED.

DETAILED DRAWING

REFERENCE
STANDARD SPEC.
SECTION 552.615

DWG. NO.
615-04

STANDARD CONCRETE
IRRIGATION DIVISION BOXES

EFFECTIVE: FEBRUARY 2005

serving you with pride

MONTANA DEPARTMENT OF TRANSPORTATION

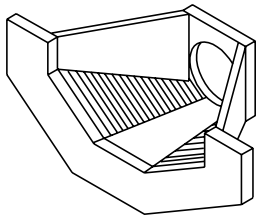

ISOMETRIC VIEW OF TRANSITION

PLACE REBAR IN CENTER OF WALLS, SLAB, ETC. UNLESS OTHERWISE SPECIFIED.

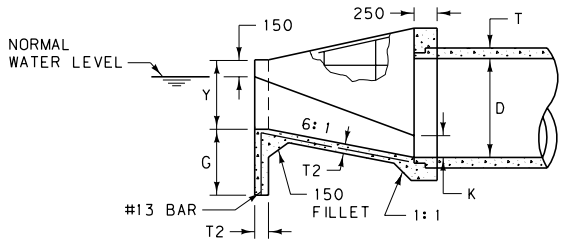

SECTION B-B

SPACE REINFORCING BARS APPROX. 300 mm EACH WAY THROUGHOUT STRUCTURE. USE CONTINUOUS BARS IN FLOORS AND WALLS WHENEVER POSSIBLE. WHEN SPLICES ARE MADE, LAP REINFORCING BAR 450 mm.

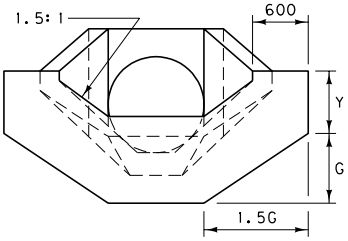

ELEVATION

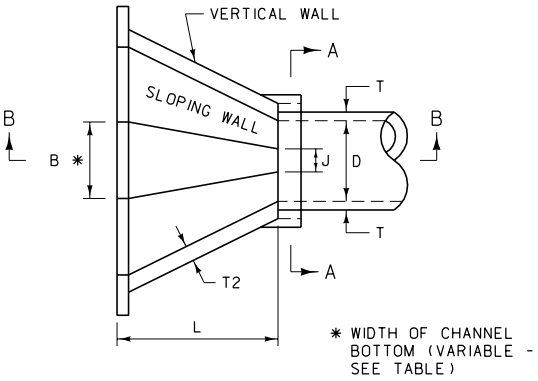

* WIDTH OF CHANNEL BOTTOM (VARIABLE - SEE TABLE)

PLAN VIEW

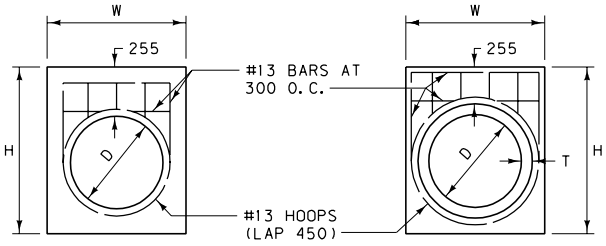

SECTION A-A
FOR CSP

SECTION A-A
FOR RCP

CHAMFER ALL EXPOSED CORNERS TO 25 mm.

INLET AND OUTLET CONCRETE TRANSITIONS FOR CSP																		
CULVERT		DIMENSIONS								QUANTITIES								
										B = D			B = D + 300			B = D + 600		
DIA. D	AREA (m²)	J	H	L	T2	W	K	Y	G	B	CL"DD" CONC. (m³)	#13 REBAR (kg)	B	CL"DD" CONC. (m³)	#13 REBAR (kg)	B	CL"DD" CONC. (m³)	#13 REBAR (kg)
450	0.159	140	1050	900	150	850	105	380	600	450	0.6	31.3	750	0.7	33.6	1050	0.7	36.3
600	0.283	180	1250	1200	150	1000	140	460	600	600	0.9	43.5	900	1.0	46.3	1200	1.0	49.0
750	0.442	240	1400	1500	150	1100	180	530	600	750	1.2	55.3	1050	1.2	58.5	1350	1.3	61.7
900	0.636	275	1550	1800	150	1300	210	610	750	900	1.6	75.8	1200	1.7	78.9	1500	1.7	83.5
1050	0.866	310	1750	2100	150	1500	240	690	750	1050	2.0	90.7	1350	2.1	95.7	1650	2.2	100.2
1200	1.131	365	1900	2400	200	1600	280	760	750	1200	3.1	116.6	1500	3.2	121.1	1800	3.4	125.2

INLET AND OUTLET CONCRETE TRANSITIONS FOR RCP																			
CULVERT		DIMENSIONS									QUANTITIES								
											B = D			B = D + 300			B = D + 600		
DIA. D	AREA (m²)	J	H	L	T	T2	W	K	Y	G	B	CL"DD" CONC. (m³)	#13 REBAR (kg)	B	CL"DD" CONC. (m³)	#13 REBAR (kg)	B	CL"DD" CONC. (m³)	#13 REBAR (kg)
450	0.164	140	1100	900	63.5	150	970	105	380	600	450	0.6	33.6	750	0.7	36.3	1050	0.8	38.6
600	0.292	185	1300	1200	76.2	150	1150	140	460	600	600	0.9	45.4	900	1.0	48.1	1200	1.0	50.8
750	0.456	230	1500	1500	88.9	150	1320	175	530	600	750	1.2	57.6	1050	1.3	60.8	1350	1.4	64.0
900	0.657	275	1700	1800	101.6	150	1500	215	610	750	900	1.6	78.9	1200	1.7	82.1	1500	1.8	86.6
1050	0.894	325	1900	2100	114.3	150	1680	245	690	750	1050	2.1	96.2	1350	2.1	100.7	1650	2.2	105.2
1200	1.167	370	2050	2400	127.0	200	1860	280	760	750	1200	3.1	121.1	1500	3.3	125.6	1800	3.4	130.2

NOTES:

INSTALL STRUCTURES OUTSIDE THE CLEAR ZONE.

PROVIDE TRASHRACKS WHEN REQUIRED. SEE DTL. DWG. NO. 615-02.

ALL DIMENSIONS ARE MILLIMETERS (mm) UNLESS OTHERWISE NOTED.

DETAILED DRAWING

REFERENCE STANDARD SPEC. SECTION 615

DWG. NO. 615-06

CONCRETE IRRIGATION INLET AND OUTLET TRANSITION FOR RCP AND CSP PIPES

EFFECTIVE: FEBRUARY 2005

serving you with pride

MONTANA DEPARTMENT OF TRANSPORTATION

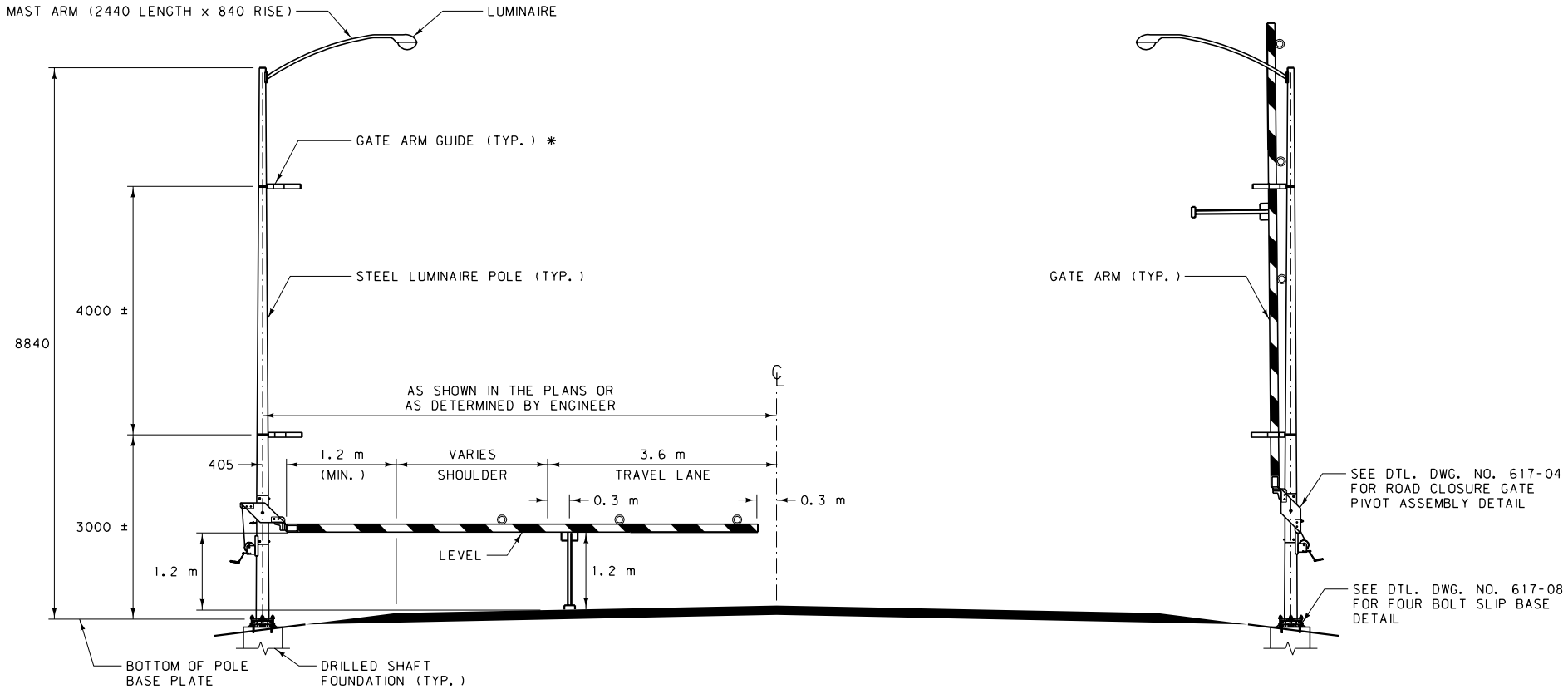

TYPICAL LOWERED POSITION

TYPICAL RAISED POSITION

ELEVATION

DIVIDED HIGHWAY INSTALLATION SHOWN

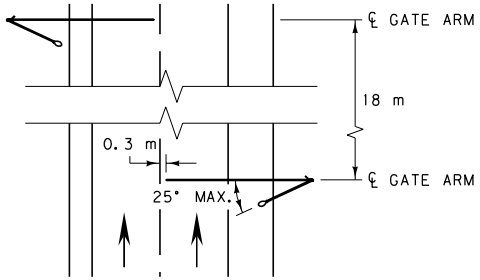

TYPICAL DIVIDED HIGHWAY INSTALLATION

(2 GATES REQUIRED)

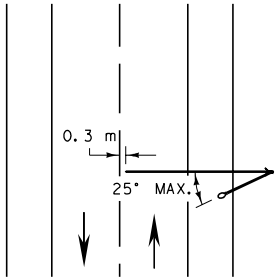

TYPICAL TWO-WAY, TWO-LANE INSTALLATION

(1 GATE REQUIRED)

NOTES:

* HEIGHT OF GATE ARM GUIDES MAY VARY AS REQUIRED FOR WARNING LIGHT CLEARANCES.

SEE DTL. DWG. NO. 617-02 FOR ADDITIONAL ROAD CLOSURE GATE DETAILS.

ALL DIMENSIONS ARE MILLIMETERS (mm) UNLESS OTHERWISE NOTED.

DETAILED DRAWING	
REFERENCE STANDARD SPEC. SECTION 617	DWG. NO. 617-00
ROAD CLOSURE GATE	
EFFECTIVE: FEBRUARY 2005	

MDT serving you with pride — MONTANA DEPARTMENT OF TRANSPORTATION

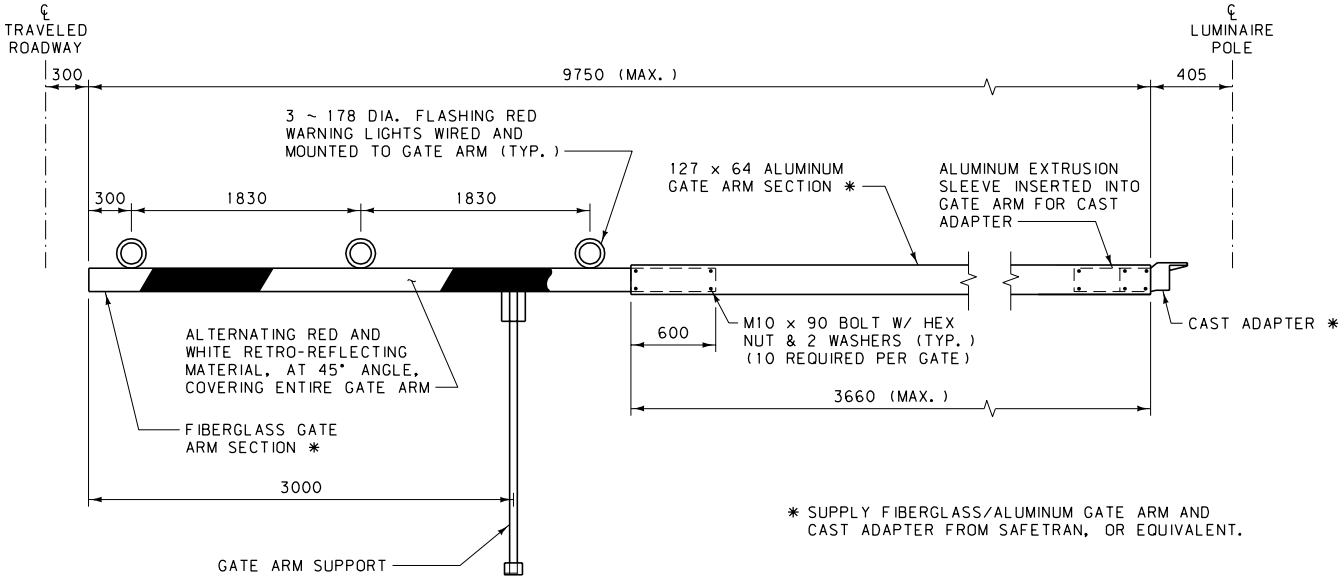

GATE ARM

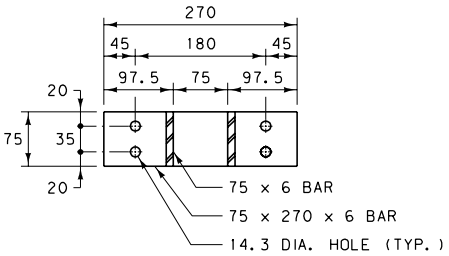

SECTION A-A

(U-BOLTS NOT SHOWN)

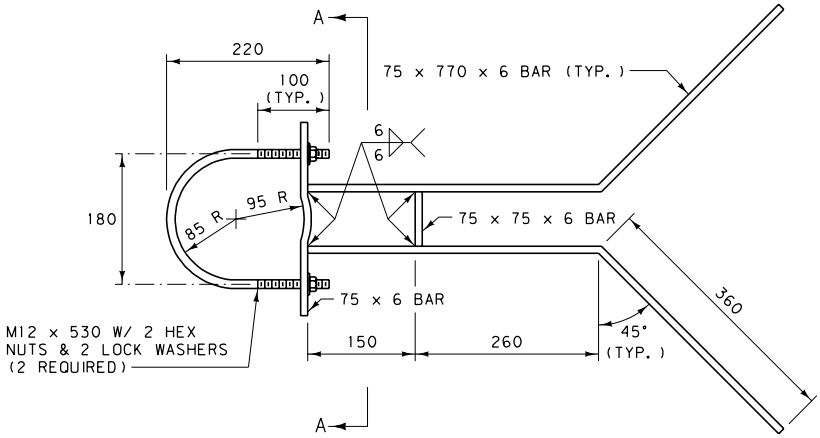

GATE ARM GUIDE

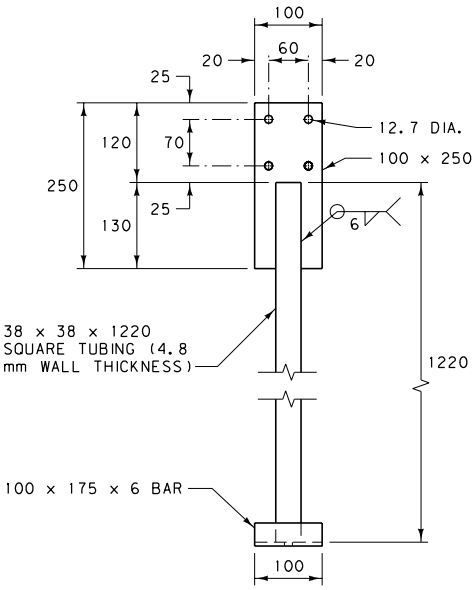

ELEVATION

(GATE ARM AND BOLTS NOT SHOWN)

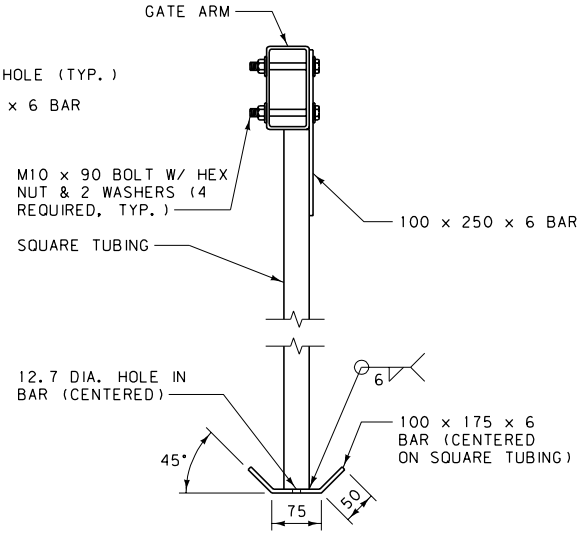

RIGHT SIDE

GATE ARM SUPPORT

ALL DIMENSIONS ARE MILLIMETERS (mm) UNLESS OTHERWISE NOTED.

DETAILED DRAWING	
REFERENCE STANDARD SPEC. SECTION 617	DWG. NO. 617-02
ROAD CLOSURE GATE DETAILS	
EFFECTIVE: FEBRUARY 2005	

serving you with pride — MONTANA DEPARTMENT OF TRANSPORTATION

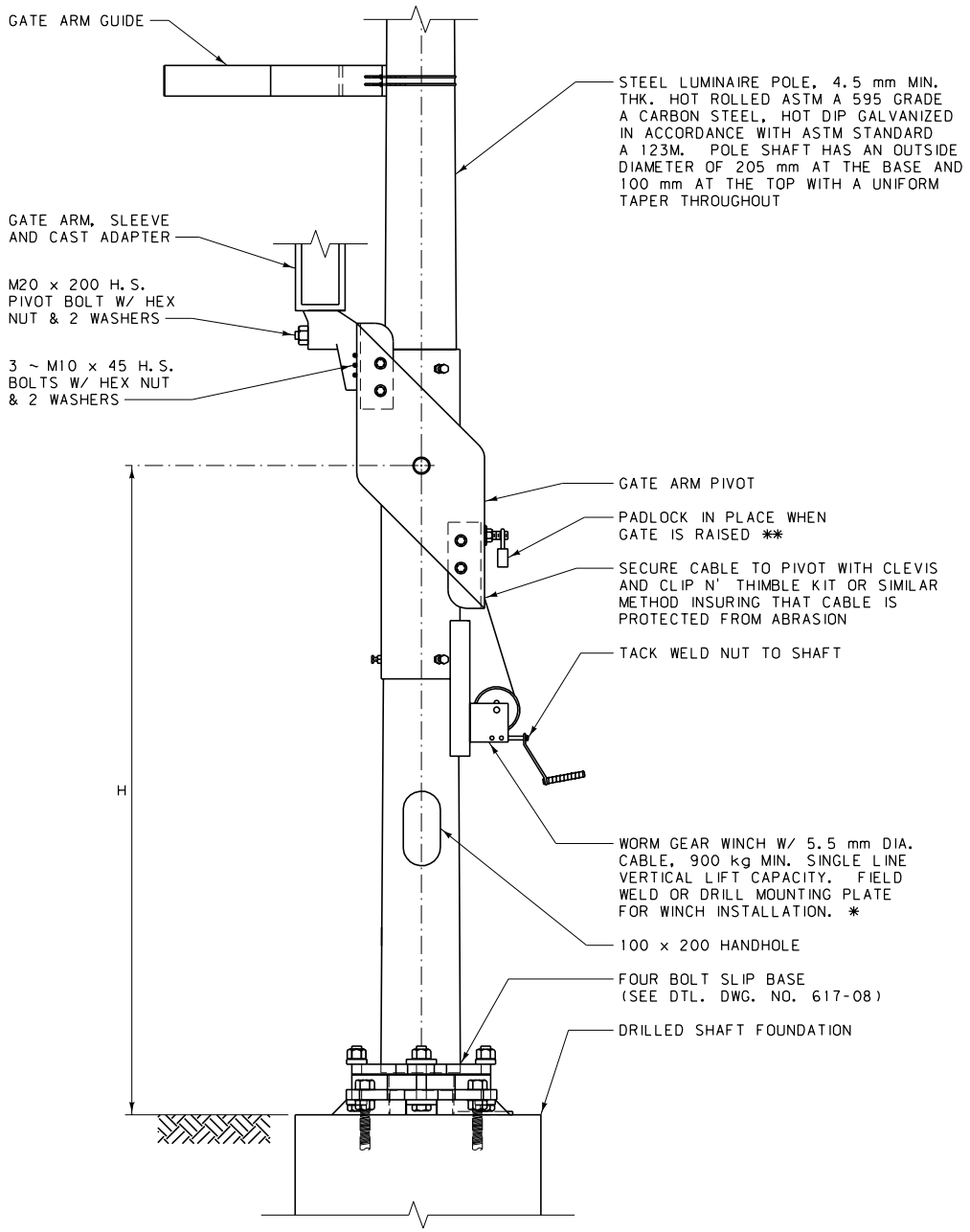

ROAD CLOSURE GATE
PIVOT ASSEMBLY

NOTES:

SEE DTL. DWG. NO. 617-06 FOR PIVOT ASSEMBLY DETAILS.

MOUNTING HEIGHT (H) WILL BE SHOWN IN THE PLANS OR SPECIFIED BY THE ENGINEER TO PROVIDE FOR THE PROPER HEIGHT OF THE GATE ABOVE THE ROADWAY.

ALL BOLTS ARE TO CONFORM TO ASTM F 568M CLASS 4.6, UNLESS DESIGNATED H.S. (HIGH STRENGTH), WHICH ARE TO CONFORM TO ASTM A 325M. AFTER ROAD CLOSURE GATE ASSEMBLY, PAINT ALL EXPOSED BOLT THREADS OR DAMAGE TO THE GALVANIZING WITH TWO COATS OF ZINC RICH PAINT CONFORMING TO ASTM A 780.

* SUPPLY WORM GEAR WINCH AND CABLE FROM DUTTON - LAINSON (STOCK NUMBER 4Z183), OR EQUIVALENT.

** WHEN THE GATE IS FULLY RAISED, PLACE THE NUT AND WASHER SNUGLY AGAINST THE OUTSIDE OF THE REAR CHANNEL AND PADLOCK IN PLACE. SUPPLY ONE HEAVY, WEATHERPROOF PADLOCK WITH 2 KEYS FOR EACH GATE ARM PIVOT. KEY PAIRED PIVOTS (DIVIDED HIGHWAY INSTALLATION) ALIKE.

ALL DIMENSIONS ARE MILLIMETERS (mm) UNLESS OTHERWISE NOTED.

DETAILED DRAWING	
REFERENCE STANDARD SPEC. SECTION 617	DWG. NO. 617-04
ROAD CLOSURE GATE PIVOT ASSEMBLY	
EFFECTIVE: FEBRUARY 2005	
serving you with pride	MONTANA DEPARTMENT OF TRANSPORTATION

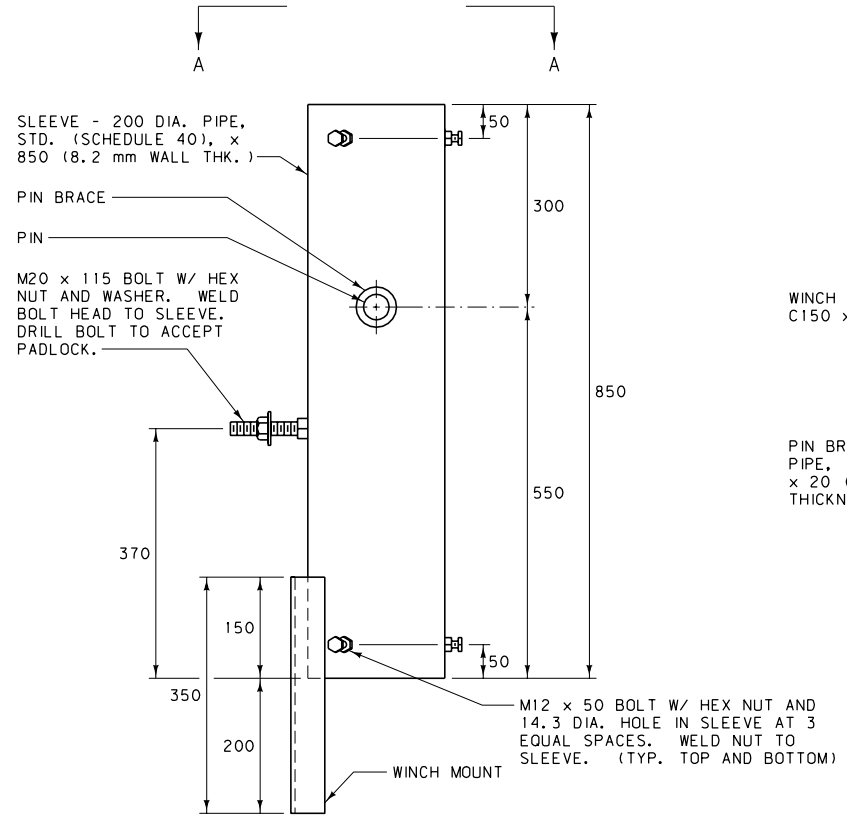

PIVOT SLEEVE

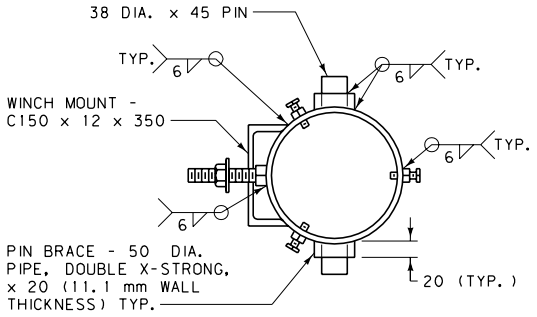

VIEW A-A

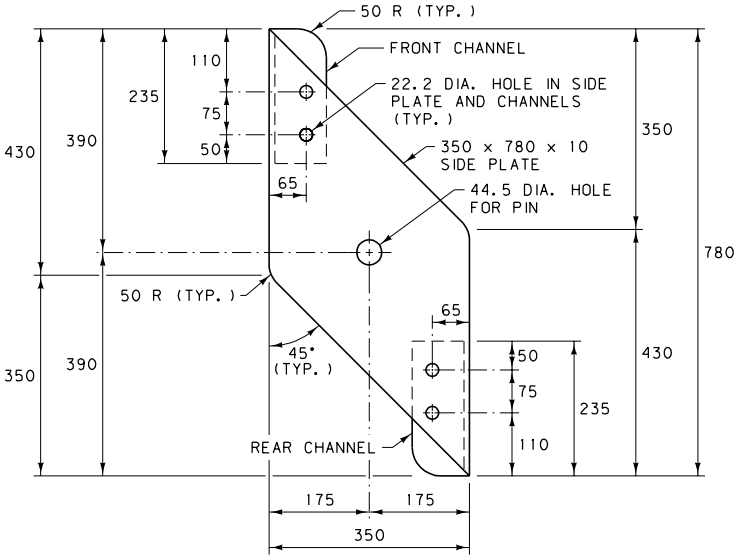

ELEVATION

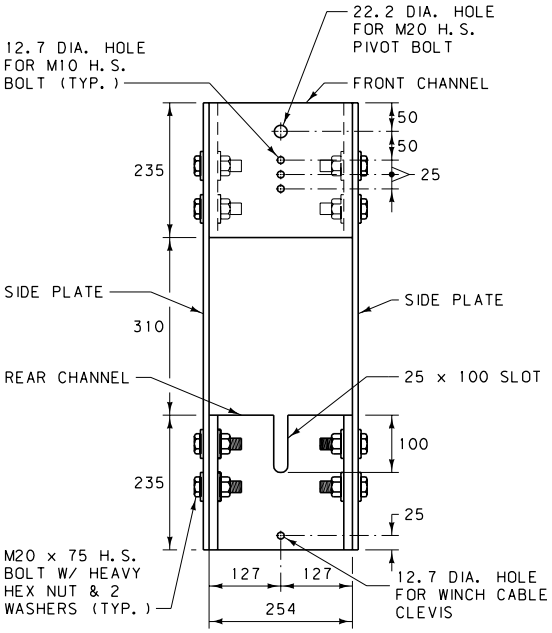

END VIEW

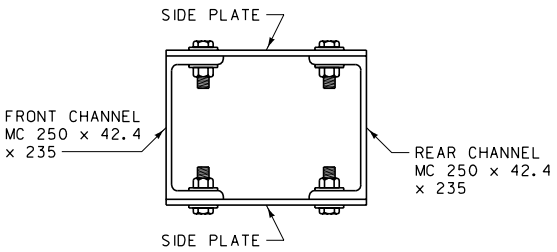

PLAN

SIDE PLATE

ALL DIMENSIONS ARE MILLIMETERS (mm) UNLESS OTHERWISE NOTED.

DETAILED DRAWING	
REFERENCE STANDARD SPEC. SECTION 617	DWG. NO. 617-06
ROAD CLOSURE GATE PIVOT ASSEMBLY DETAILS	
EFFECTIVE: FEBRUARY 2005	
serving you with pride	MONTANA DEPARTMENT OF TRANSPORTATION

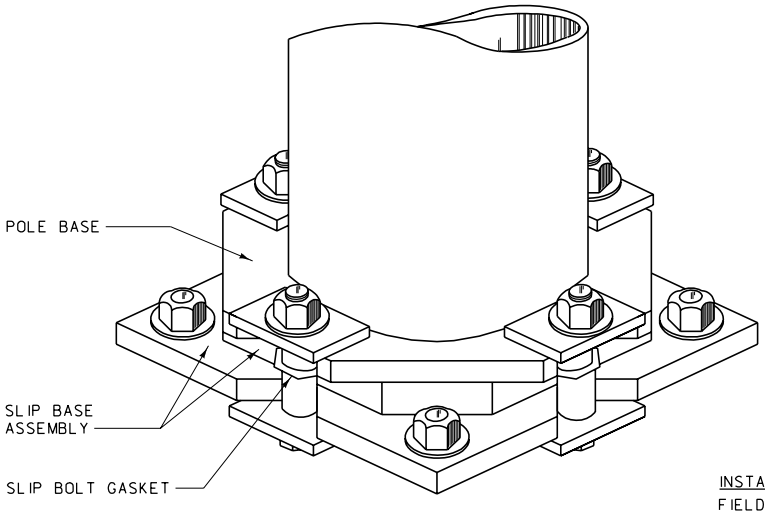

ISOMETRIC VIEW

* TOP OF ANCHOR BOLTS MUST BE BELOW SHEAR PLANE.

** IT IS CRITICAL THAT THE GROUND SURROUNDING THE CONCRETE FOUNDATION BE GRADED AND CONTOURED TO PREVENT VEHICLE UNDERCARRIAGE SNAGGING. ALL POINTS ON THE GROUND SURFACE ARE TO BE AT THE TOP OF THE FOUNDATION WITHIN ANY 1525 mm HORIZONTAL DISTANCE EXTENDING OVER THE SLIP BASE AS SHOWN, AND ALIGNING PERPENDICULAR TO THE ROADWAY CENTERLINE OR ON A RADIAL LINE FOR A CURVED ROADWAY.

INSTALLATION REQUIREMENTS FOR TOP NUTS OF ANCHOR BOLTS

FIELD LUBRICATE BEARING FACE AND THREADS OF TOP ANCHOR BOLT NUTS WITH A STICK WAX. TIGHTEN TOP NUTS TO SNUG-TIGHT. SNUG-TIGHT IS DEFINED AS THE TIGHTNESS THAT EXISTS WHEN THE GROUND BASE PLATE IS IN FIRM CONTACT WITH THE TOP AND BOTTOM NUTS, AND IS ATTAINED BY THE FULL EFFORT OF A MAN USING AN ORDINARY SPUD WRENCH. AFTER THE SNUG-TIGHT CONDITION IS ATTAINED, ROTATE THE TOP NUTS AN ADDITIONAL 45° (+20°, -0°).

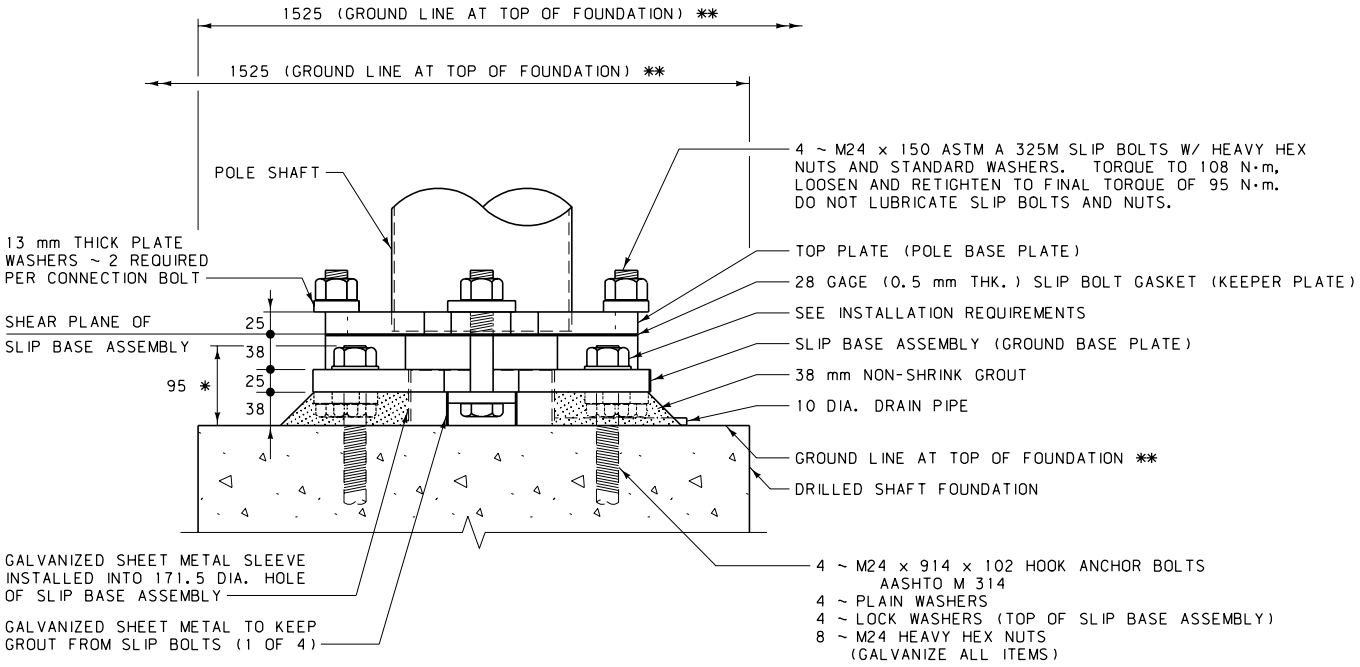

FOUR BOLT SLIP BASE

NOTES:

SEE DTL. DWG. NO. 617-10 FOR FOUR BOLT SLIP BASE DETAILS AND DRILLED SHAFT FOUNDATION.

CONFORM SLIP BOLT GASKET (KEEPER PLATE) TO ASTM A 653M GRADE 230 WITH COATING ASTM G 90.

CONFORM ALL PLATES TO ASTM A 709M (GRADE 250) OR AASHTO M 270M.

GALVANIZE ALL STRUCTURAL STEEL AFTER FABRICATION ACCORDING TO ASTM A 123M. ALL CONTACT AREAS OF STRUCTURAL STEEL ARE TO BE FREE OF GALVANIZING BEADS AND RUNS.

ELECTRO-PLATE ALL CONNECTING HARDWARE (HIGH STRENGTH BOLTS, HEAVY HEX NUTS AND STD. WASHERS) WITH CADMIUM IN ACCORDANCE WITH ASTM B 766 CLASS 12.

DO NOT ENCLOSE ANY SLIP BOLT HEADS OR WASHERS IN GROUT AND KEEP THEM COMPLETELY MECHANICALLY ACCESSIBLE, ALLOWING BOLTS TO BE FREELY PUSHED OUT DURING VEHICLE IMPACT.

ALL DIMENSIONS ARE MILLIMETERS (mm) UNLESS OTHERWISE NOTED.

DETAILED DRAWING	
REFERENCE STANDARD SPEC. SECTION 617	DWG. NO. 617-08
FOUR BOLT SLIP BASE	
EFFECTIVE: FEBRUARY 2005	

serving you with pride — MONTANA DEPARTMENT OF TRANSPORTATION

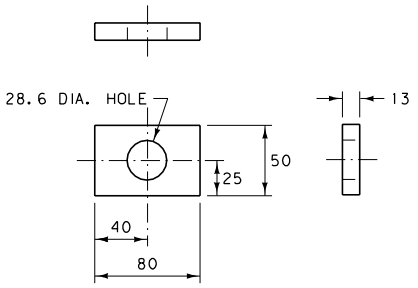

PLATE WASHER

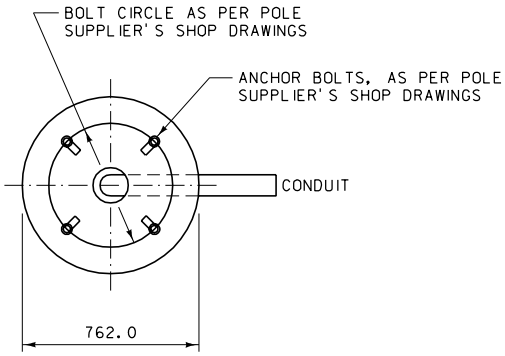

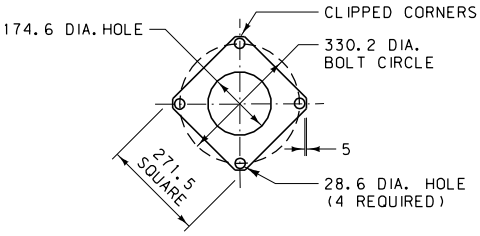

SLIP BOLT GASKET

(KEEPER PLATE)

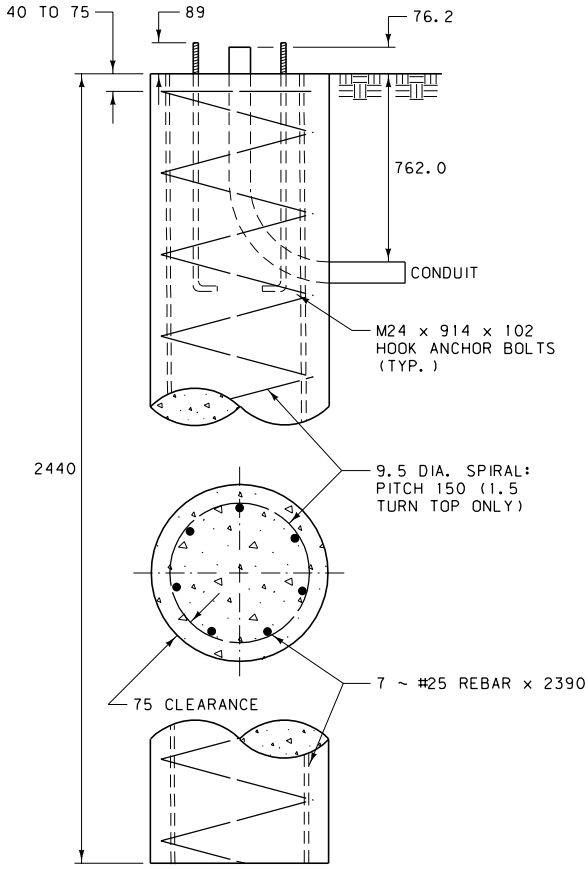

DRILLED SHAFT FOUNDATION

(LUMINAIRE POLE)

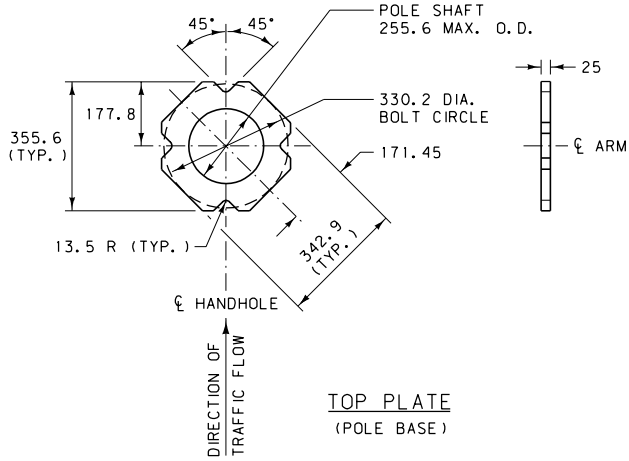

TOP PLATE

(POLE BASE)

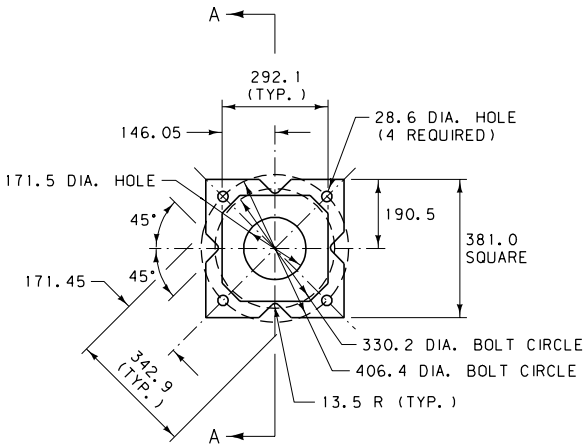

SLIP BASE ASSEMBLY

(GROUND BASE PLATE)

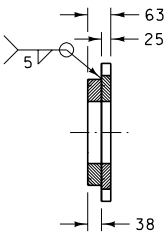

SECTION A-A

ALL DIMENSIONS ARE MILLIMETERS (mm) UNLESS OTHERWISE NOTED.

DETAILED DRAWING	
REFERENCE STANDARD SPEC. SECTION 617	DWG. NO. 617-10
FOUR BOLT SLIP BASE DETAILS	
EFFECTIVE: FEBRUARY 2005	
serving you with pride	MONTANA DEPARTMENT OF TRANSPORTATION

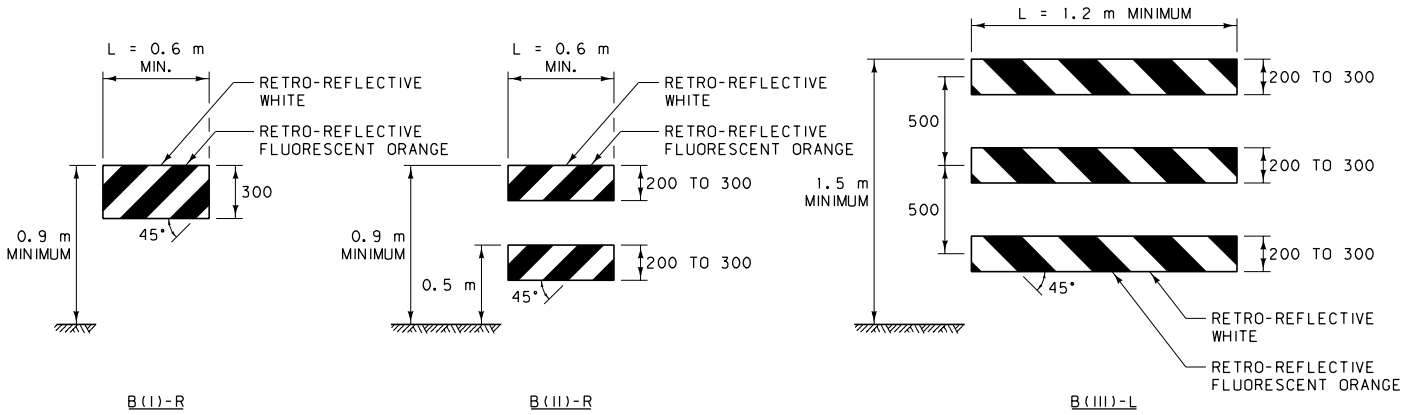

NOTES:

① RAIL STRIPES ARE 150 mm IN WIDTH FOR BARRICADES 0.9 m OR GREATER IN LENGTH. FOR BARRICADES LESS THAN 0.9 m IN LENGTH, 100 mm STRIPES MAY BE USED.

② THE PREDOMINANT COLOR FOR OTHER BARRICADE COMPONENTS IS WHITE, BUT UNPAINTED GALVANIZED METAL OR ALUMINUM COMPONENTS MAY BE USED.

③ WHERE B(III) BARRICADES ARE TO FACE TRAFFIC FROM TWO DIRECTIONS, STRIPING ON BOTH THE FRONT AND REAR SIDES IS REQUIRED.

④ USE MATERIALS FOR BARRICADE FRAMEWORK AND ASSEMBLY, INCLUDING ANY SIGNS AND MEANS OF ATTACHMENT, THAT MEET THE REQUIREMENTS FOR NCHRP 350 FOR WORK ZONE DEVICES.

⑤ USE SANDBAGS OF SUFFICIENT WEIGHT TO HOLD THE BARRICADES IN PLACE. WATERPROOF SANDBAGS DURING PERIODS OF FREEZING WEATHER.

PORTABLE BARRICADES

Ⓐ USE POST-MOUNTED VERTICAL PANELS TO DELINEATE ROADSIDE CONSTRICTIONS OF THE CLEAR ZONE.

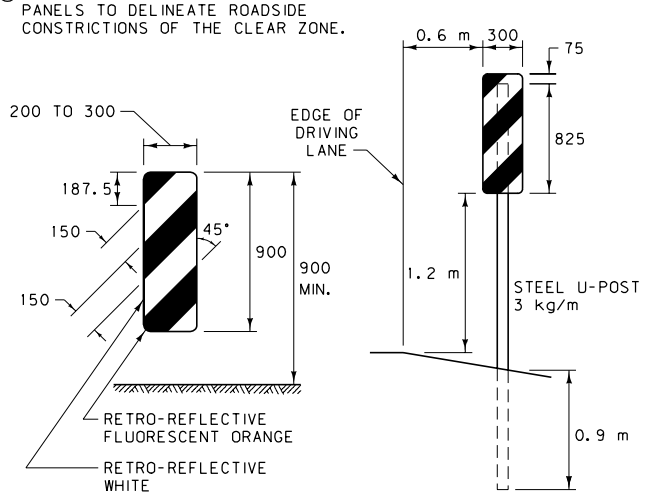

PORTABLE

POST MOUNTED

VERTICAL PANEL

(VP-1R SHOWN. REVERSE FOR VP-1L.)

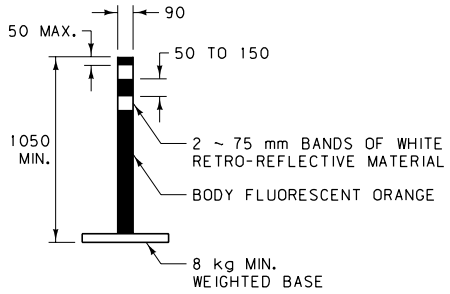

FLEXIBLE GUIDE POST (TUBULAR MARKER)

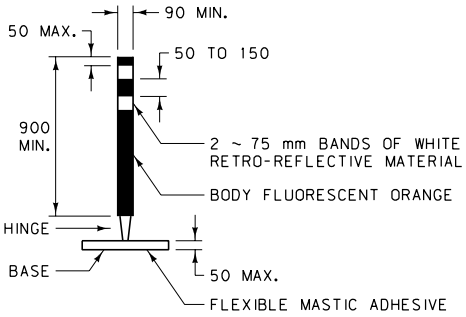

HINGED FLEXIBLE GUIDE POST (TUBULAR MARKER)

(SELF RIGHTING AFTER IMPACT)

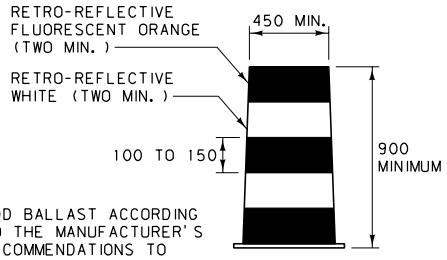

ADD BALLAST ACCORDING TO THE MANUFACTURER'S RECOMMENDATIONS TO HOLD THE DRUM IN PLACE.

DRUMS HAVE CLOSED TOPS.

PLASTIC DRUM

NOTES:

⑥ BARRICADES OR VERTICAL PANELS DESIGNATED "R" ARE PLACED TO THE RIGHT SIDE OF APPROACHING TRAFFIC. THOSE DESIGNATED "L" ARE PLACED TO THE LEFT SIDE.

⑦ SEE THE MANUAL ON UNIFORM TRAFFIC CONTROL DEVICES (MUTCD) PART 6 FOR ADDITIONAL INFORMATION.

⑧ USE ASTM TYPE IX RETRO-REFLECTIVE SHEETING ON ALL BARRICADES AND VERTICAL PANELS. USE ASTM TYPE III RETRO-REFLECTIVE SHEETING ON ALL PLASTIC DRUMS AND FLEXIBLE GUIDE POSTS.

ALL DIMENSIONS ARE MILLIMETERS (mm) UNLESS OTHERWISE NOTED.

DETAILED DRAWING	
REFERENCE STANDARD SPEC. SECTION 618	DWG. NO. 618-00
BARRICADES AND CHANNELIZING DEVICES	
EFFECTIVE: FEBRUARY 2005	
serving you with pride	MONTANA DEPARTMENT OF TRANSPORTATION

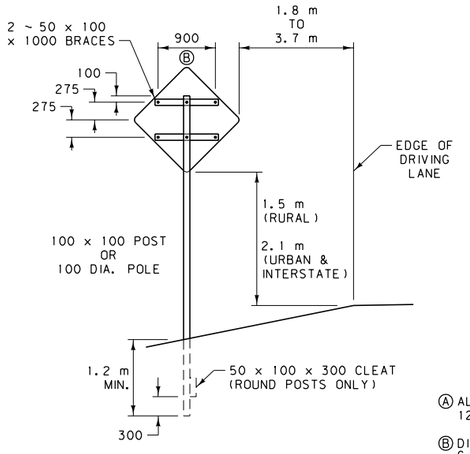

WARNING

Ⓐ ALL WARNING SIGNS ARE 1200 x 1200 IN SIZE.

Ⓑ DIMENSIONS ARE FROM ℄ BOLT TO ℄ BOLT.

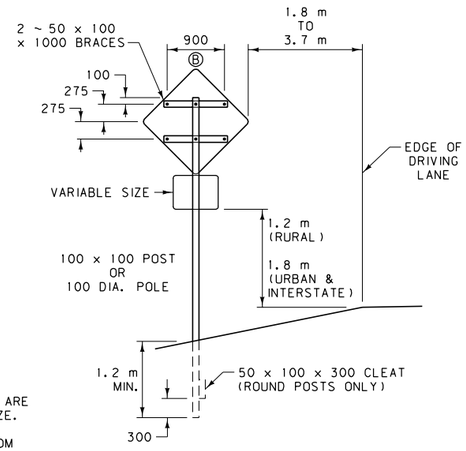

WARNING
WITH SUPPLEMENTAL PANEL

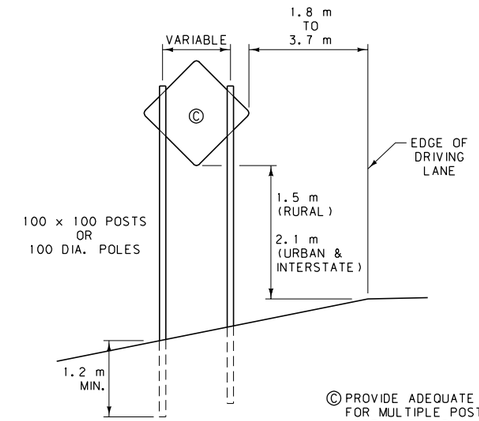

TWO POSTS

Ⓒ PROVIDE ADEQUATE SIGN BRACING FOR MULTIPLE POST INSTALLATIONS MEETING THE REQUIREMENTS OF NCHRP 350.

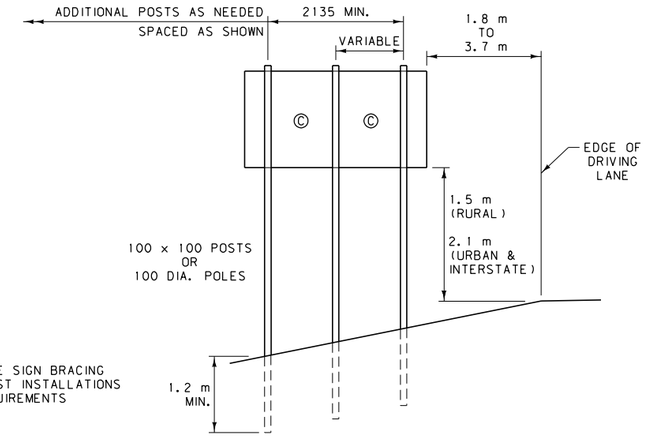

THREE OR MORE POSTS

TYPICAL MULTIPLE POST INSTALLATIONS
(FOR CONSTRUCTION SIGNING ONLY)

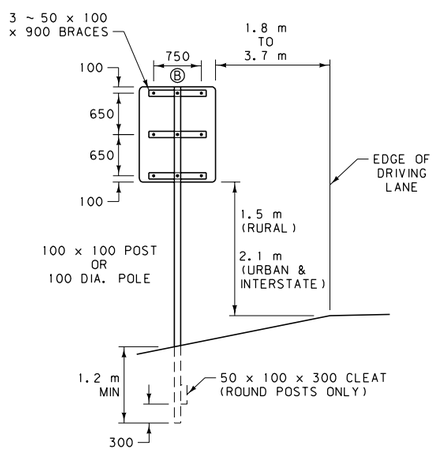

REGULATORY
1200 x 1500 PANEL

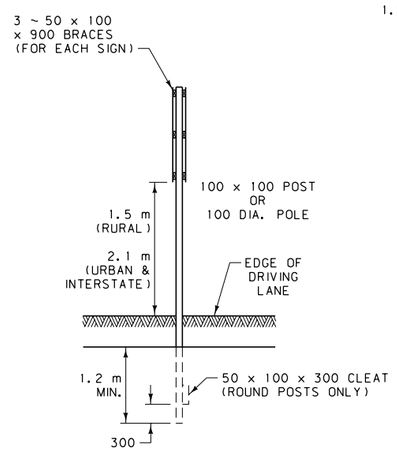

REGULATORY
1200 x 1500 PANEL
BACK TO BACK

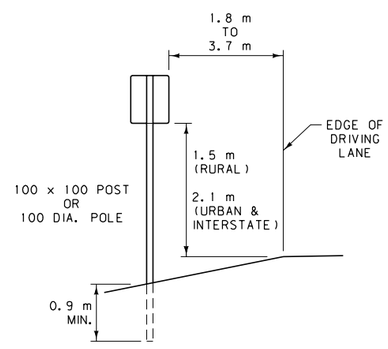

REGULATORY
600 x 750 PANEL

TYPICAL SIGN MOUNTINGS
(FOR CONSTRUCTION SIGNING ONLY)

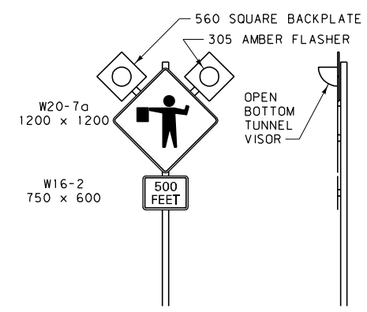

FLASHING FLAGGER AHEAD SIGN

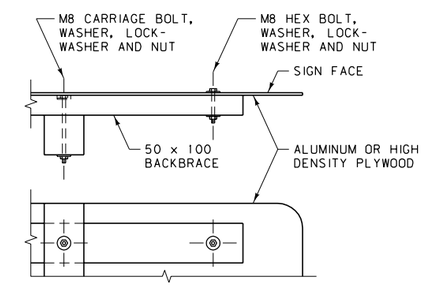

SIGN FASTENING DETAILS

NOTES:

1. FURNISH AND INSTALL POSTS OR POLES MEETING NCHRP 350 REQUIREMENTS.
2. FURNISH POST OR POLE LENGTHS TO ACCOMMODATE THE FOUNDATION DEPTH, THE MOUNTING HEIGHT AND THE MOUNTINGS.
3. BACKFILL FOUNDATION HOLES IN 205 mm LIFTS, THOROUGHLY TAMPING EACH LIFT.
4. IN HIGH WIND AREAS INSTALL LARGER POSTS OR POLES COMPLYING WITH THE FOUNDATION AND BREAKAWAY REQUIREMENTS OF DTL. DWG. 619-20. THE MINIMUM POST SPACING FOR MULTIPLE POSTS LARGER THAN 100 mm IS 2135 mm.
5. VERTICAL ALIGNMENT OF SIGNS IS TO BE WITHIN 5° OF PLUMB (85 mm IN 1000 mm).
6. USE THE URBAN MOUNTING HEIGHTS IN BUSINESS, COMMERCIAL, AND RESIDENTIAL DISTRICTS WHERE PARKING AND/OR PEDESTRIAN MOVEMENT IS LIKELY TO OCCUR, OR WHERE THERE ARE OTHER OBSTRUCTIONS TO VIEW. URBAN MOUNTING HEIGHTS MAY ALSO BE USED IN RURAL AREAS FOR INCREASED VISIBILITY.

ALL DIMENSIONS ARE MILLIMETERS (mm) UNLESS OTHERWISE NOTED.

DETAILED DRAWING	
REFERENCE STANDARD SPEC. SECTION 618	DWG. NO. 618-01
CONSTRUCTION SIGN DETAILS	
EFFECTIVE: FEBRUARY 2005	
serving you with pride	MONTANA DEPARTMENT OF TRANSPORTATION

NOTES:

1. THE MAXIMUM WEIGHT OF THE ASSEMBLY IS 115 kg.
2. USE A 355 mm WHEEL AND TIRE.
3. AUTOMOTIVE AND EQUIPMENT AXLE ASSEMBLIES MAY NOT BE USED FOR TRAILER-MOUNTED SIGN SUPPORTS.
4. OTHER NCHRP 350 CRASH TESTED ASSEMBLIES ARE ACCEPTABLE.

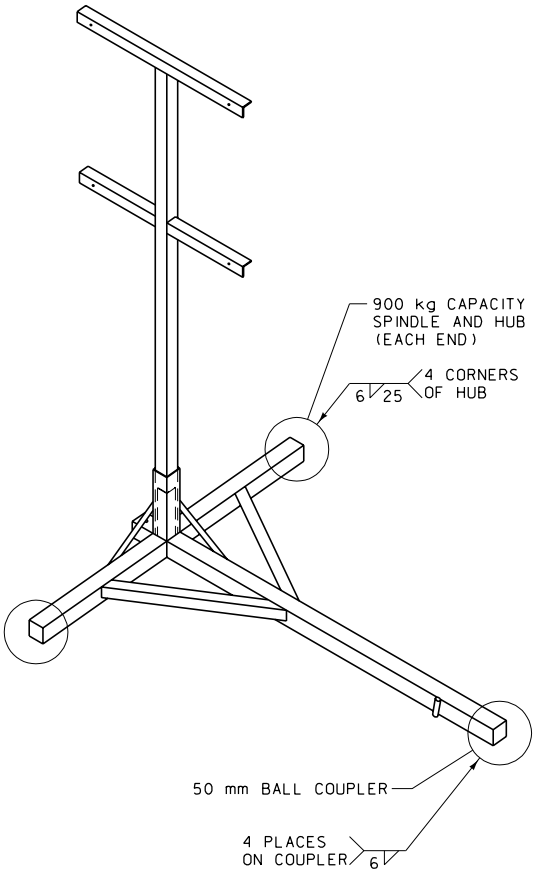

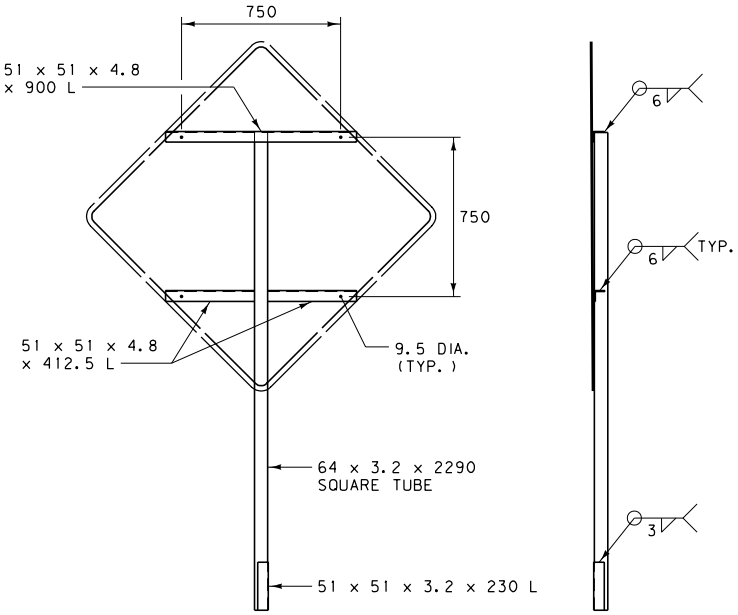

FRONT RIGHT

SIGN SUPPORT

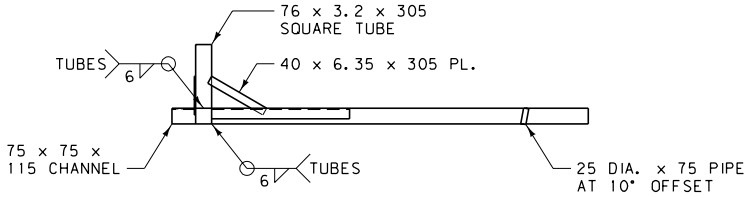

FRONT

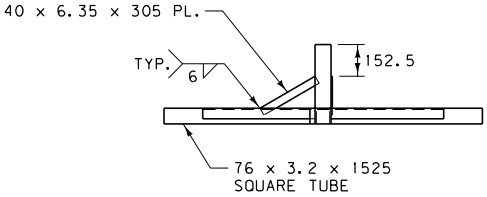

RIGHT

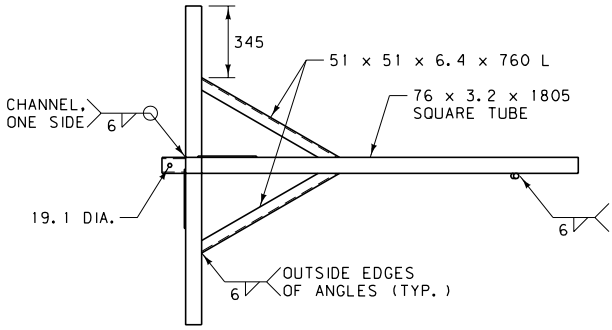

TOP

TRAILER

ALL DIMENSIONS ARE MILLIMETERS (mm) UNLESS OTHERWISE NOTED.

DETAILED DRAWING	
REFERENCE STANDARD SPEC. SECTION 618, 715	DWG. NO. 618-02
PORTABLE SIGN SUPPORT ASSEMBLY	
EFFECTIVE: FEBRUARY 2005	
serving you with pride	MONTANA DEPARTMENT OF TRANSPORTATION

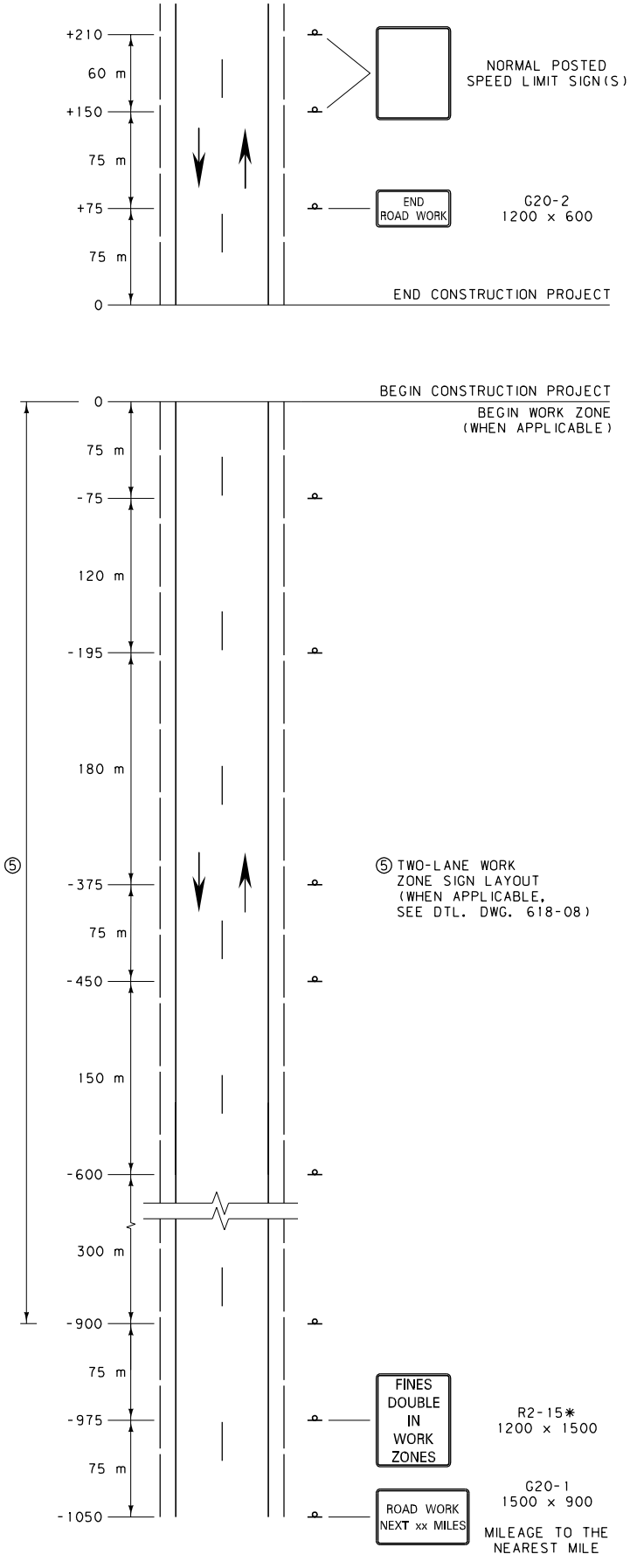

NOTES:

① THIS SIGN LAYOUT IS INTENDED TO BE A PERMANENT INSTALLATION FOR THE DURATION OF THE CONSTRUCTION PROJECT, AS APPROVED BY THE ENGINEER. COVER OR REMOVE ANY SIGNS WHEN NOT IN USE, INCLUDING SPEED LIMIT SIGNS NOT WARRANTED. REMOVE ANY SIGN SUPPORTS IF THEY WILL NOT BE NEEDED WITHIN 90 DAYS.

② XX = SPEED DETERMINED BY THE ENGINEER.

③ INCLUDE REGULATORY SIGNING ONLY IF THE CONSTRUCTION PROJECT CONTAINS A WORK ZONE OR HAS ROADWAY CONDITIONS THAT WARRANT SPEED RESTRICTIONS. MODIFY REGULATORY SIGNS TO MATCH ADJACENT REGULATIONS.

④ THE WORK ZONE REFERS TO THE AREA WITHIN THE CONSTRUCTION PROJECT WHERE WORK IS ACTUALLY TAKING PLACE.

⑤ IN ADDITION TO THE SIGNS SHOWN, INCLUDE THE APPROPRIATE TWO-LANE WORK ZONE SIGNS (DTL. DWG. NO. 618-08) WHEN A WORK ZONE IS LOCATED AT THE BEGINNING OR END OF THE CONSTRUCTION PROJECT.

⑥ SET UP THIS SIGN LAYOUT IN EACH TRAFFIC DIRECTION.

* DENOTES SIGNS THAT ARE UNIQUE TO MONTANA.

ALL DIMENSIONS ARE MILLIMETERS (mm) UNLESS OTHERWISE NOTED.

DETAILED DRAWING	
REFERENCE STANDARD SPEC. SECTION 618	DWG. NO. 618-04
TWO-LANE CONSTRUCTION PROJECT	
EFFECTIVE: FEBRUARY 2005	
serving you with pride	MONTANA DEPARTMENT OF TRANSPORTATION

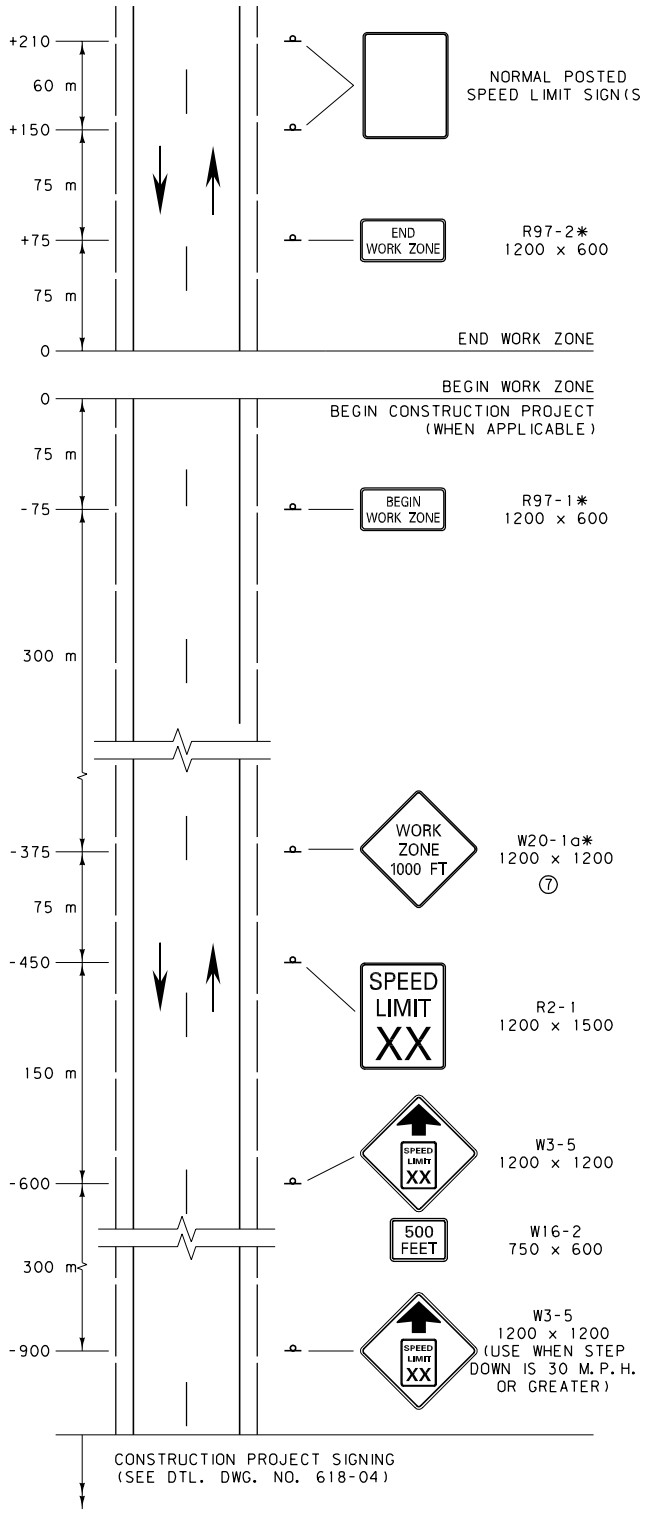

WORK ZONE WITH NO FLAGGER

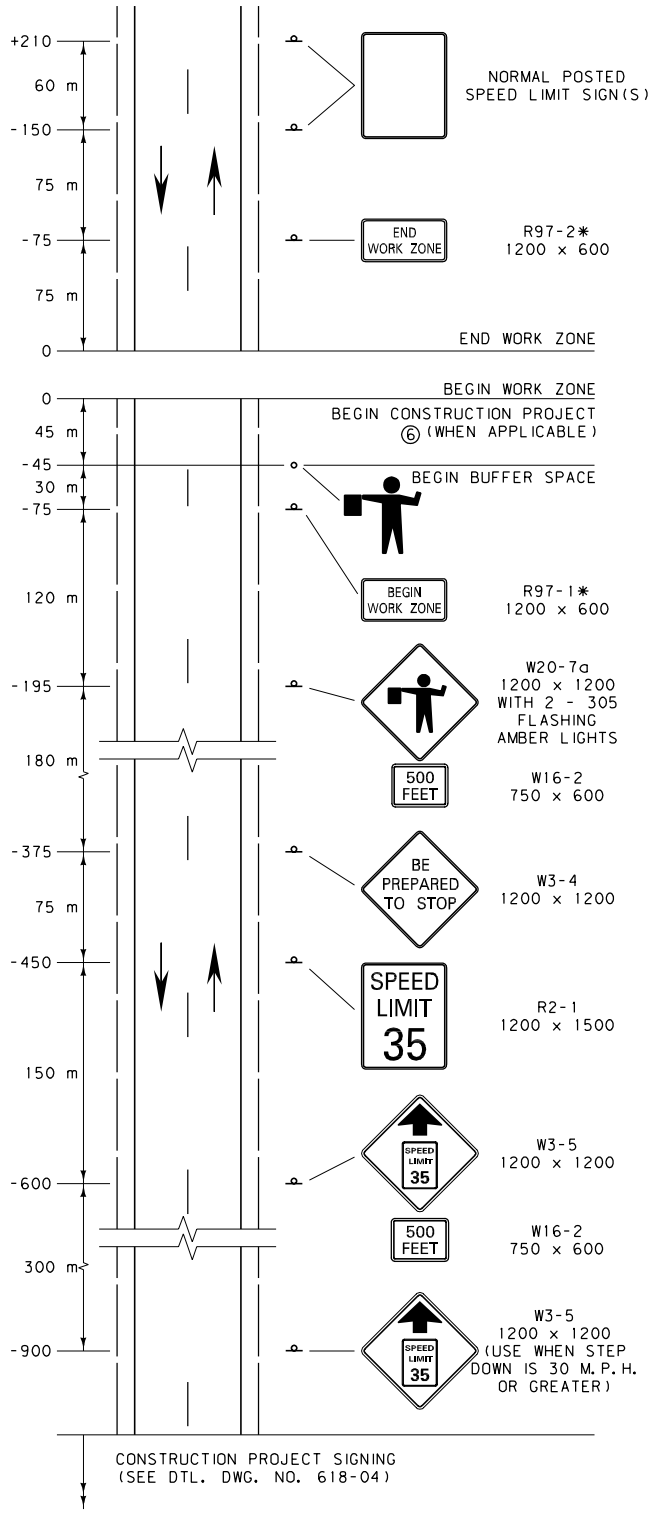

WORK ZONE WITH FLAGGER

NOTES:

1. THESE SIGN LAYOUTS WORK IN CONJUNCTION WITH THE PERMANENT LAYOUT ILLUSTRATED ON DTL. DWG. NO. 618-04 FOR WORK ZONES LOCATED AT THE BEGIN AND END OF THE CONSTRUCTION PROJECT.
2. XX = SPEED DETERMINED BY THE ENGINEER.
3. INCLUDE REGULATORY SIGNING ONLY IF THERE IS REASON TO RESTRICT SPEED WITHIN THE WORK ZONE. MODIFY REGULATORY SIGNS TO MATCH ADJACENT REGULATIONS.
4. SET UP THIS SIGN LAYOUT IN EACH TRAFFIC DIRECTION. COMBINE SUCCESSIVE WORK ZONES WHEN LESS THAN 1.6 KILOMETERS APART.
5. THE WORK ZONE REFERS TO THE AREA WITHIN THE CONSTRUCTION PROJECT WHERE WORK IS ACTUALLY TAKING PLACE.
6. THE BUFFER SPACE MAY BE INCREASED FOR DOWNGRADES AND OTHER CONDITIONS THAT AFFECT STOPPING DISTANCE.
7. USE MORE SPECIFIC SIGNS, WHERE APPLICABLE, SUCH AS W8-3 "PAVEMENT ENDS."
8. PROVIDE A SECOND FLAGGER WHEN REQUIRED BY STANDARD SPECIFICATIONS, SECTION 618.

* DENOTES SIGNS THAT ARE UNIQUE TO MONTANA.

ALL DIMENSIONS ARE MILLIMETERS (mm) UNLESS OTHERWISE NOTED.

DETAILED DRAWING	
REFERENCE STANDARD SPEC. SECTION 618	DWG. NO. 618-08
TWO-LANE CONSTRUCTION PROJECT WORK ZONES	
EFFECTIVE: FEBRUARY 2005	

MDT serving you with pride — MONTANA DEPARTMENT OF TRANSPORTATION

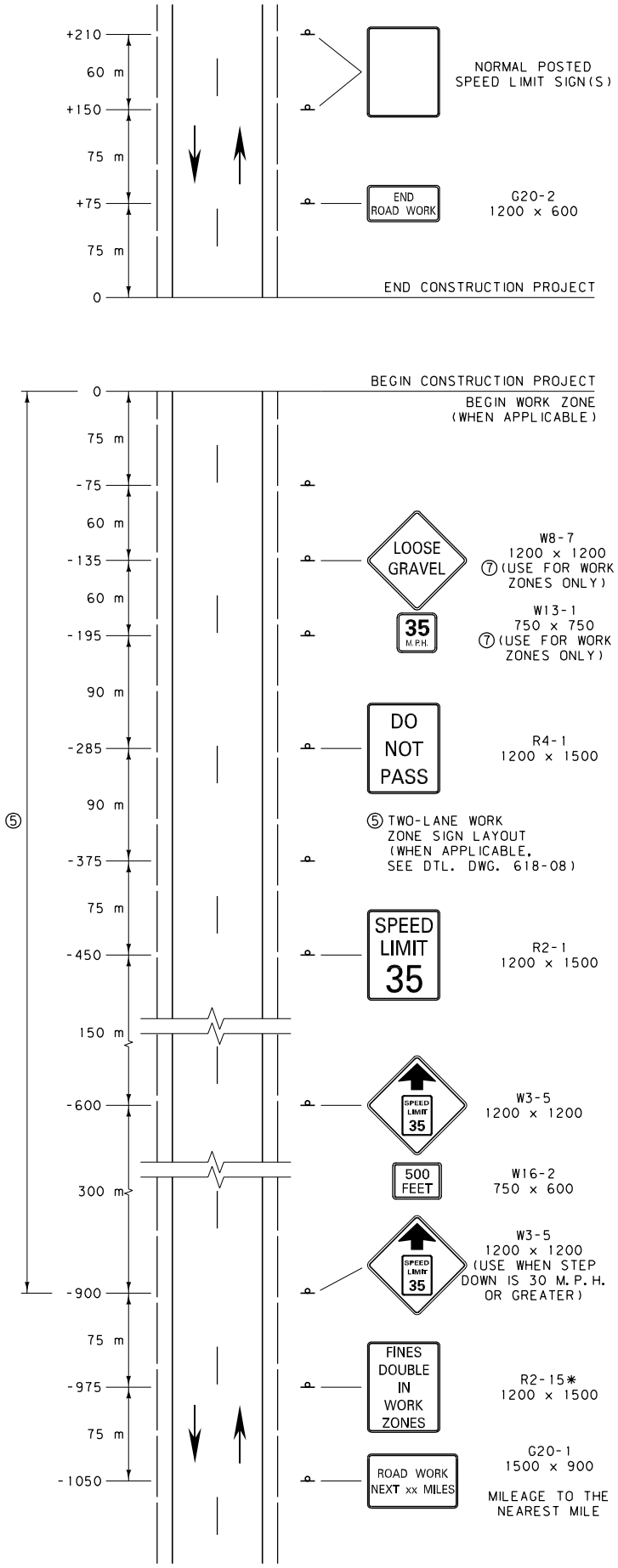

NOTES:

① THIS SIGN LAYOUT WORKS IN CONJUNCTION WITH THE PERMANENT LAYOUT ILLUSTRATED ON DTL. DWG. NO. 618-04. COVER OR REMOVE SIGNS WHEN NOT IN USE, INCLUDING SPEED LIMIT SIGNS NOT WARRANTED.

② INCLUDE REGULATORY SIGNING ONLY IF THERE IS REASON TO RESTRICT SPEED WITHIN THE CONSTRUCTION PROJECT. MODIFY REGULATORY SIGNS TO MATCH ADJACENT REGULATIONS.

③ THE WORK ZONE REFERS TO THE AREA WITHIN THE CONSTRUCTION PROJECT WHERE WORK IS ACTUALLY TAKING PLACE.

④ FOR SEAL COAT WORK ZONE ACTIVITIES, USE THE FLAGGER APPLICATION OF THE WORK ZONE LAYOUT FROM DTL. DWG. NO. 618-08.

⑤ IN ADDITION TO THE SIGNS SHOWN, INCLUDE THE APPROPRIATE TWO-LANE WORK ZONE SIGNS WHEN A WORK ZONE IS LOCATED AT THE BEGINNING OR END OF THE CONSTRUCTION PROJECT.

⑥ SET UP THIS SIGN LAYOUT IN EACH TRAFFIC DIRECTION.

⑦ PLACE THE W8-7 AND W13-1 SIGNS AT THE BEGINING OF EACH WORK ZONE AND AT 3.2 km INTERVALS WITHIN THE WORK ZONES FOR EACH DIRECTION OF TRAVEL.

* DENOTES SIGNS THAT ARE UNIQUE TO MONTANA.

ALL DIMENSIONS ARE MILLIMETERS (mm) UNLESS OTHERWISE NOTED.

DETAILED DRAWING	
REFERENCE STANDARD SPEC. SECTION 618	DWG. NO. 618-10
TWO-LANE CONSTRUCTION PROJECT SEAL COAT	
EFFECTIVE: FEBRUARY 2005	

MDT serving you with pride — MONTANA DEPARTMENT OF TRANSPORTATION

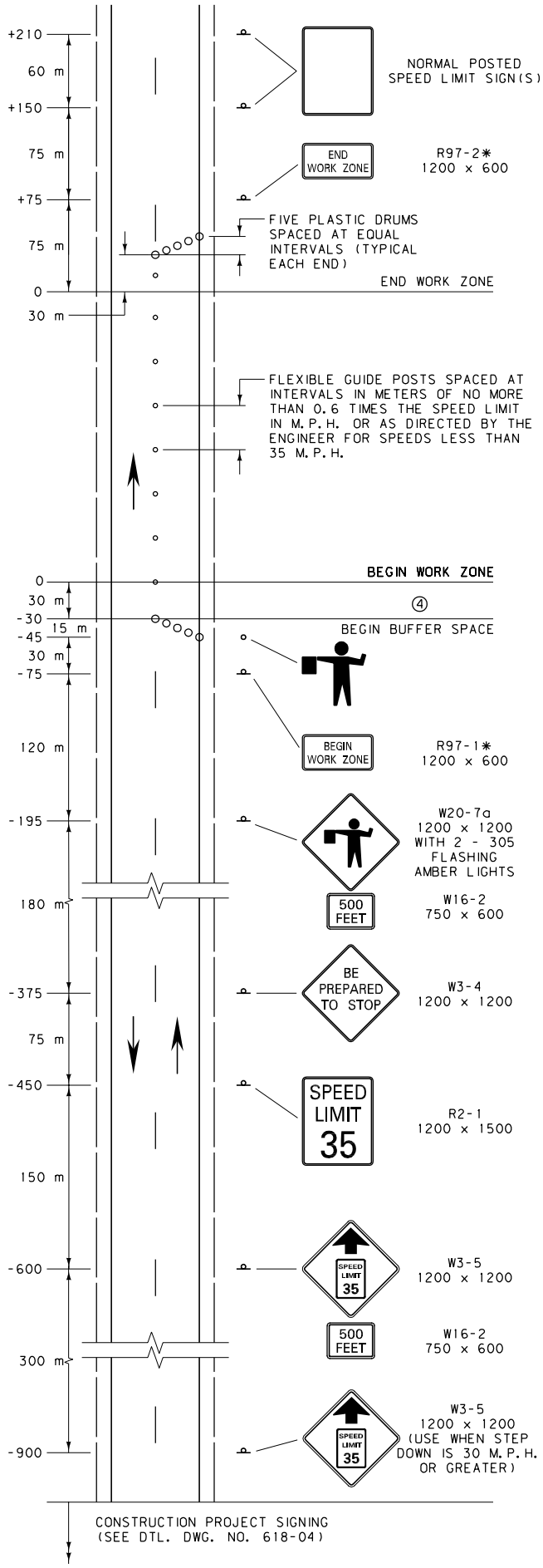

NOTES:

① MODIFY REGULATORY SIGNS TO MATCH ADJACENT REGULATIONS.

② SET UP THIS SIGN LAYOUT IN EACH TRAFFIC DIRECTION.

③ THE WORK ZONE REFERS TO THE AREA WITHIN THE CONSTRUCTION PROJECT WHERE WORK IS ACTUALLY TAKING PLACE.

④ THE BUFFER SPACE MAY BE INCREASED FOR DOWNGRADES AND OTHER CONDITIONS THAT AFFECT STOPPING DISTANCE.

⑤ PROVIDE A SECOND FLAGGER WHEN REQUIRED BY STANDARD SPECIFICATIONS, SECTION 618.

* DENOTES SIGNS THAT ARE UNIQUE TO MONTANA.

ALL DIMENSIONS ARE MILLIMETERS (mm) UNLESS OTHERWISE NOTED.

DETAILED DRAWING	
REFERENCE STANDARD SPEC. SECTION 618	DWG. NO. 618-12
TWO-LANE CONSTRUCTION PROJECT LANE CLOSURE	
EFFECTIVE: FEBRUARY 2005	
serving you with pride	MONTANA DEPARTMENT OF TRANSPORTATION

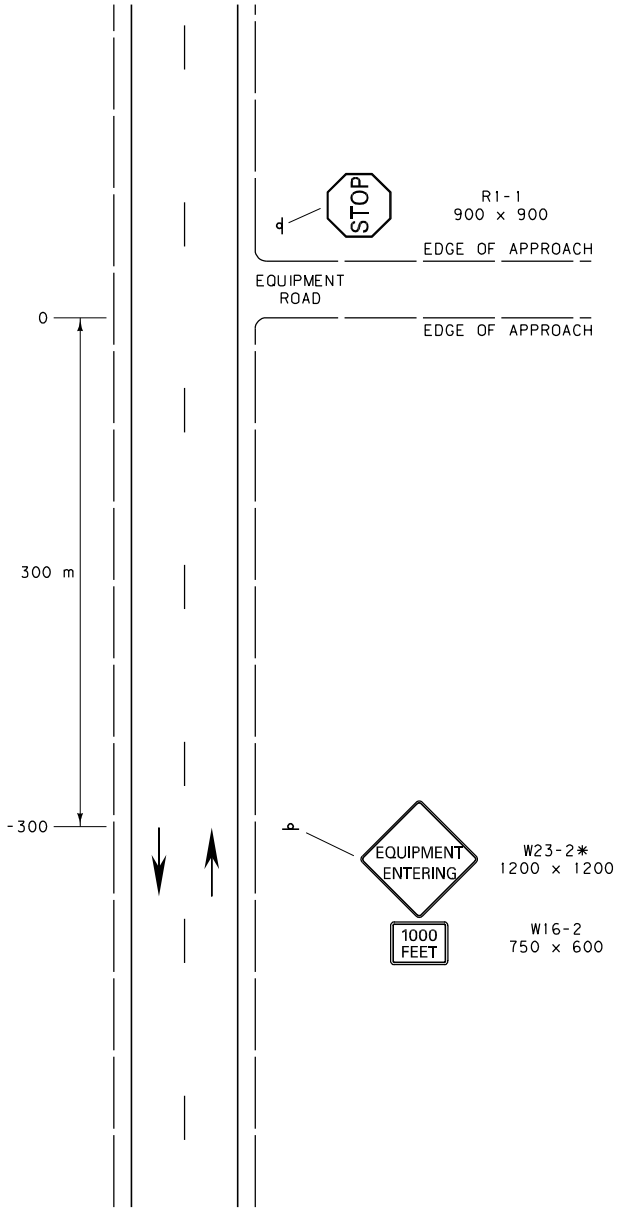

NOTES:

1. USE THIS SIGN LAYOUT WHEN APPROPRIATE. OTHERWISE REFER TO DTL. DWG. NO. 618-16 WHEN A FLAGGER IS NEEDED.
2. SET UP THIS SIGN LAYOUT IN EACH TRAFFIC DIRECTION, AS NEEDED.

* DENOTES SIGNS THAT ARE UNIQUE TO MONTANA.

ALL DIMENSIONS ARE MILLIMETERS (mm) UNLESS OTHERWISE NOTED.

DETAILED DRAWING	
REFERENCE STANDARD SPEC. SECTION 618	DWG. NO. 618-14
TWO-LANE EQUIPMENT ENTRANCES	
EFFECTIVE: FEBRUARY 2005	
serving you with pride	MONTANA DEPARTMENT OF TRANSPORTATION

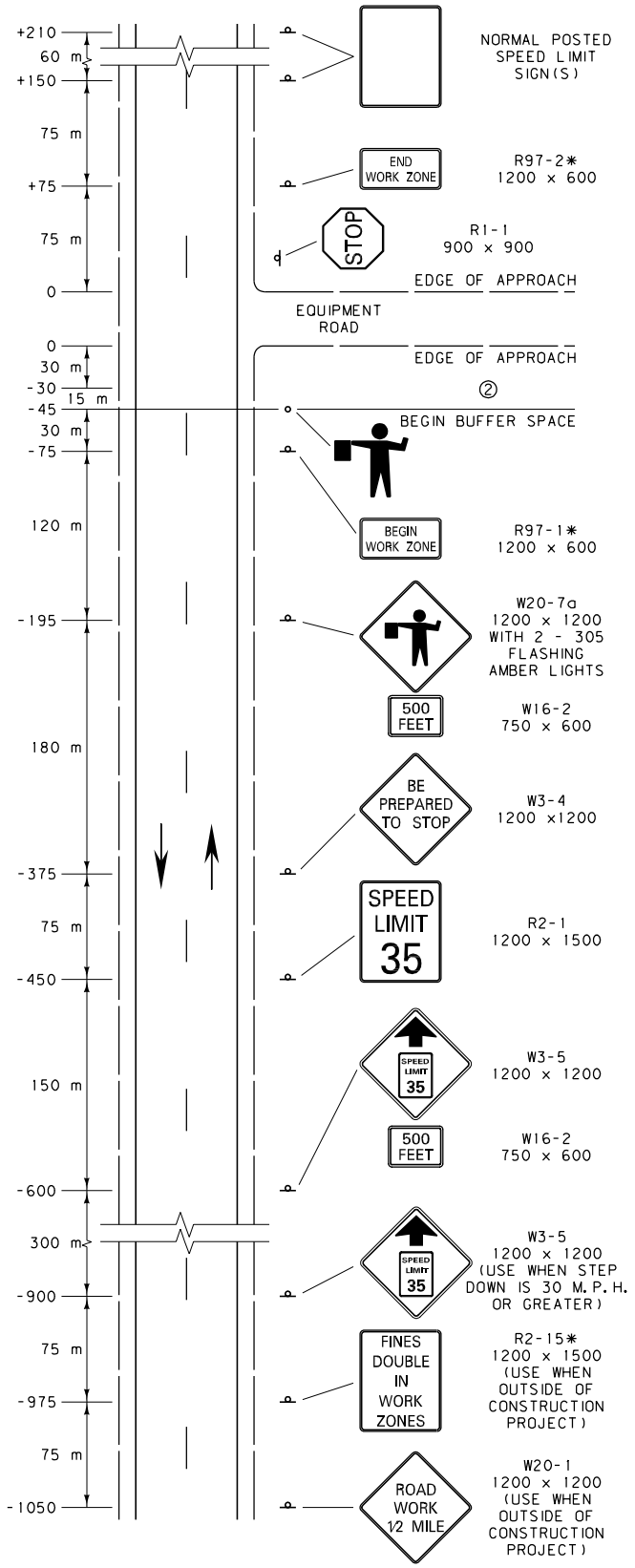

EQUIPMENT ENTRANCE WITH FLAGGER

NOTES:

① SET UP THIS SIGN LAYOUT IN EACH TRAFFIC DIRECTION, AS NEEDED.

② THE BUFFER SPACE MAY BE INCREASED FOR DOWNGRADES AND OTHER CONDITIONS THAT AFFECT STOPPING DISTANCE.

③ XX = SPEED DETERMINED BY THE ENGINEER.

④ THE WORK ZONE REFERS TO THE AREA WHERE WORK IS ACTUALLY TAKING PLACE. WHEN THIS OCCURS OUTSIDE OF A CONSTRUCTION PROJECT INCLUDE THE W20-1 AND R2-15* SIGNS.

*DENOTES SIGNS THAT ARE UNIQUE TO MONTANA.

ALL DIMENSIONS ARE MILLIMETERS (mm) UNLESS OTHERWISE NOTED.

DETAILED DRAWING	
REFERENCE STANDARD SPEC. SECTION 618	DWG. NO. 618-16
TWO-LANE EQUIPMENT ENTRANCES	
EFFECTIVE: FEBRUARY 2005	
serving you with pride	MONTANA DEPARTMENT OF TRANSPORTATION

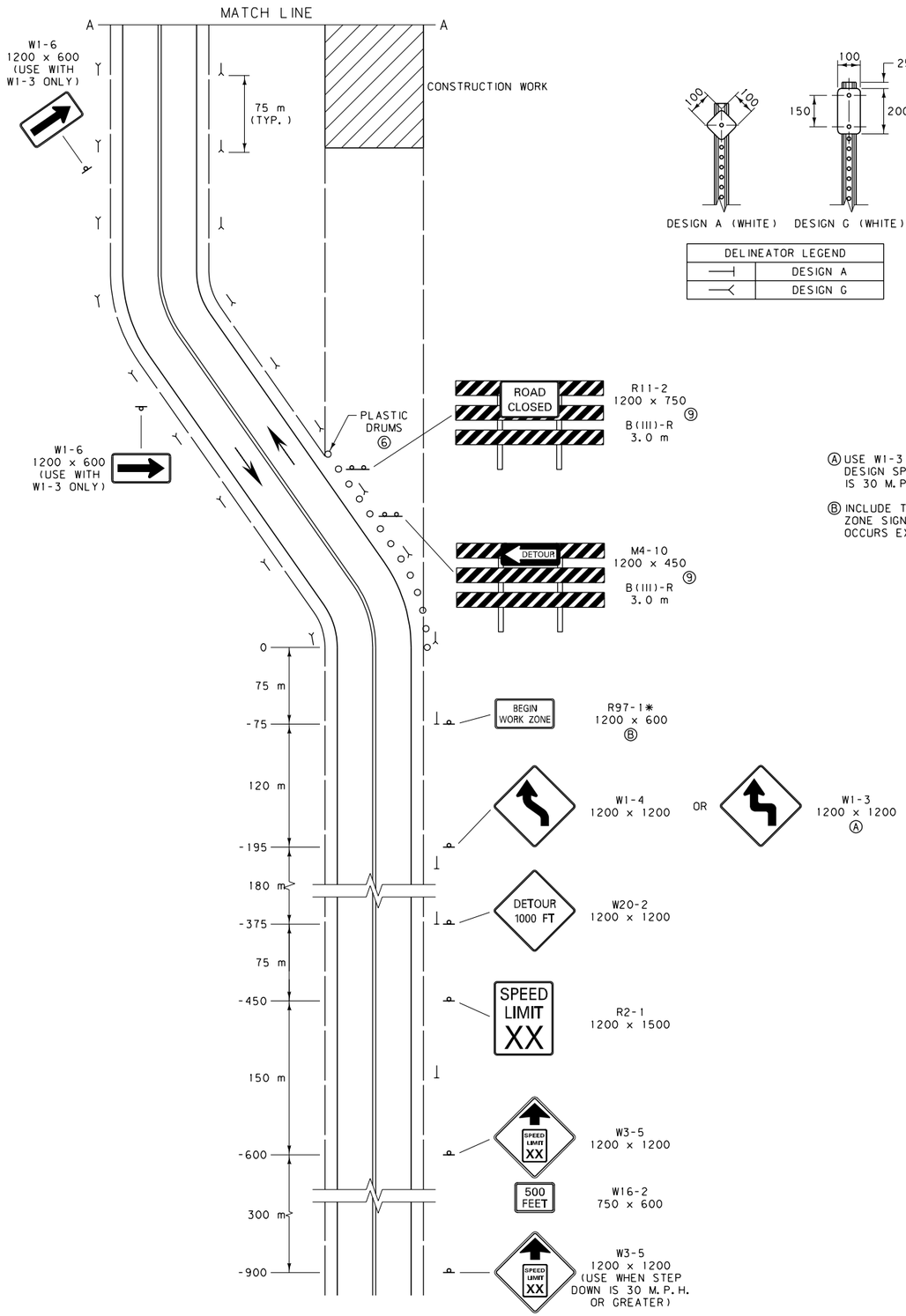

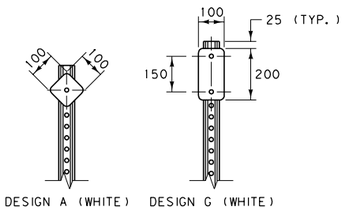

DELINEATOR LEGEND	
—|	DESIGN A
—<	DESIGN G

Ⓐ USE W1-3 SIGNS ONLY WHEN THE DESIGN SPEED OF THE CURVES IS 30 M.P.H. OR LESS.

Ⓑ INCLUDE THE BEGIN AND END WORK ZONE SIGNS IF A WORK ZONE OCCURS EXCLUSIVELY ON THE DETOUR.

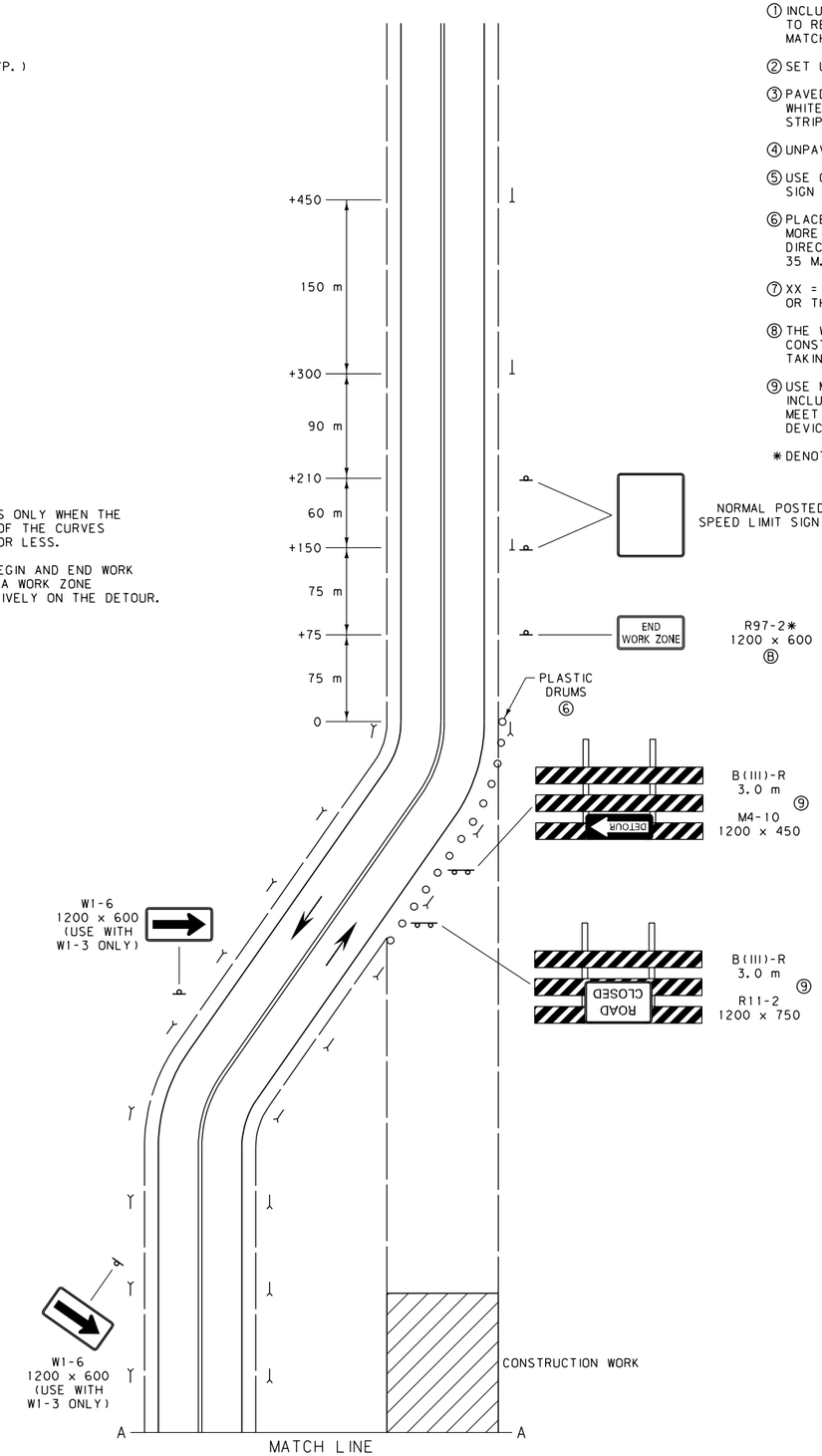

NOTES:

① INCLUDE REGULATORY SIGNING ONLY IF THERE IS REASON TO RESTRICT SPEED. MODIFY REGULATORY SIGNS TO MATCH ADJACENT REGULATIONS.

② SET UP THIS SIGN LAYOUT IN EACH TRAFFIC DIRECTION.

③ PAVED DETOURS 7.2 m WIDE OR GREATER HAVE 100 mm WHITE SHOULDER STRIPES AND APPROPRIATE CENTERLINE STRIPES.

④ UNPAVED DETOURS MAY REQUIRE ADDITIONAL DELINEATION.

⑤ USE ONLY POST MOUNTED SIGNS. DO NOT USE PORTABLE SIGN MOUNTS.

⑥ PLACE PLASTIC DRUMS AT INTERVALS IN METERS OF NO MORE THAN 0.3 TIMES THE SPEED LIMIT IN M.P.H. OR AS DIRECTED BY THE ENGINEER FOR SPEEDS LESS THAN 35 M.P.H.

⑦ XX = SPEED DETERMINED BY THE DETOUR DESIGN SPEED OR THE ENGINEER.

⑧ THE WORK ZONE REFERS TO THE AREA WITHIN THE CONSTRUCTION PROJECT WHERE WORK IS ACTUALLY TAKING PLACE.

⑨ USE MATERIALS FOR BARRICADE FRAMEWORK AND ASSEMBLY, INCLUDING ANY SIGNS AND MEANS OF ATTACHMENT, THAT MEET THE REQUIREMENTS FOR NCHRP 350 FOR WORK ZONE DEVICES.

* DENOTES SIGNS THAT ARE UNIQUE TO MONTANA.

ALL DIMENSIONS ARE MILLIMETERS (mm) UNLESS OTHERWISE NOTED.

DETAILED DRAWING	
REFERENCE STANDARD SPEC. SECTION 618	DWG. NO. 618-18
TWO-LANE CONSTRUCTION PROJECT DETOUR	
EFFECTIVE: FEBRUARY 2005	

MDT serving you with pride — MONTANA DEPARTMENT OF TRANSPORTATION

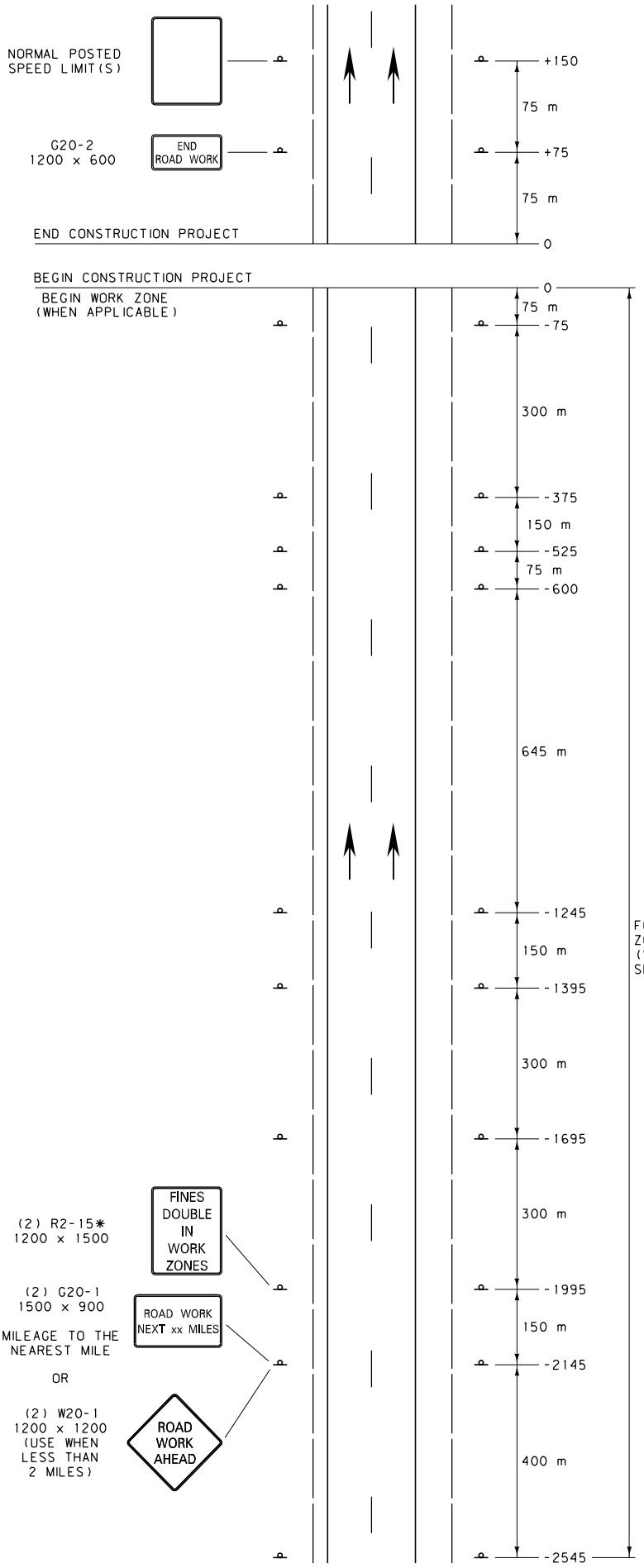

NOTES:

① THIS SIGN LAYOUT IS INTENDED TO BE A PERMANENT INSTALLATION FOR THE DURATION OF THE CONSTRUCTION PROJECT, AS APPROVED BY THE ENGINEER. COVER OR REMOVE SIGNS WHEN NOT IN USE, INCLUDING SPEED LIMIT SIGNS NOT WARRANTED. REMOVE ANY SIGN SUPPORTS IF THEY WILL NOT BE NEEDED WITHIN 90 DAYS.

② XX = SPEED DETERMINED BY THE ENGINEER.

③ INCLUDE REGULATORY SIGNING ONLY IF THE CONSTRUCTION PROJECT CONTAINS A WORK ZONE OR HAS ROADWAY CONDITIONS THAT WARRANT SPEED RESTRICTIONS. MODIFY REGULATORY SIGNS TO MATCH ADJACENT REGULATIONS.

④ THE WORK ZONE REFERS TO THE AREA WITHIN THE CONSTRUCTION PROJECT WHERE WORK IS ACTUALLY TAKING PLACE.

⑤ SET UP THIS SIGN LAYOUT IN EACH TRAFFIC DIRECTION.

⑥ IN ADDITION TO THE SIGNS SHOWN, INCLUDE THE APPROPRIATE FOUR-LANE WORK ZONE SIGNS (DTL. DWG. NO. 618-24) WHEN A WORK ZONE FALLS AT THE BEGIN OR END OF THE CONSTRUCTION PROJECT.

⑦ DIVIDED FOUR-LANE IS SHOWN. FOR UN-DIVIDED FOUR-LANE, PLACE SIGNS ON RIGHT SIDE ONLY.

* DENOTES SIGNS THAT ARE UNIQUE TO MONTANA.

ALL DIMENSIONS ARE MILLIMETERS (mm) UNLESS OTHERWISE NOTED.

DETAILED DRAWING	
REFERENCE STANDARD SPEC. SECTION 618	DWG. NO. 618-20
DIVIDED FOUR-LANE CONSTRUCTION PROJECT	
EFFECTIVE: FEBRUARY 2005	

serving you with pride — MONTANA DEPARTMENT OF TRANSPORTATION

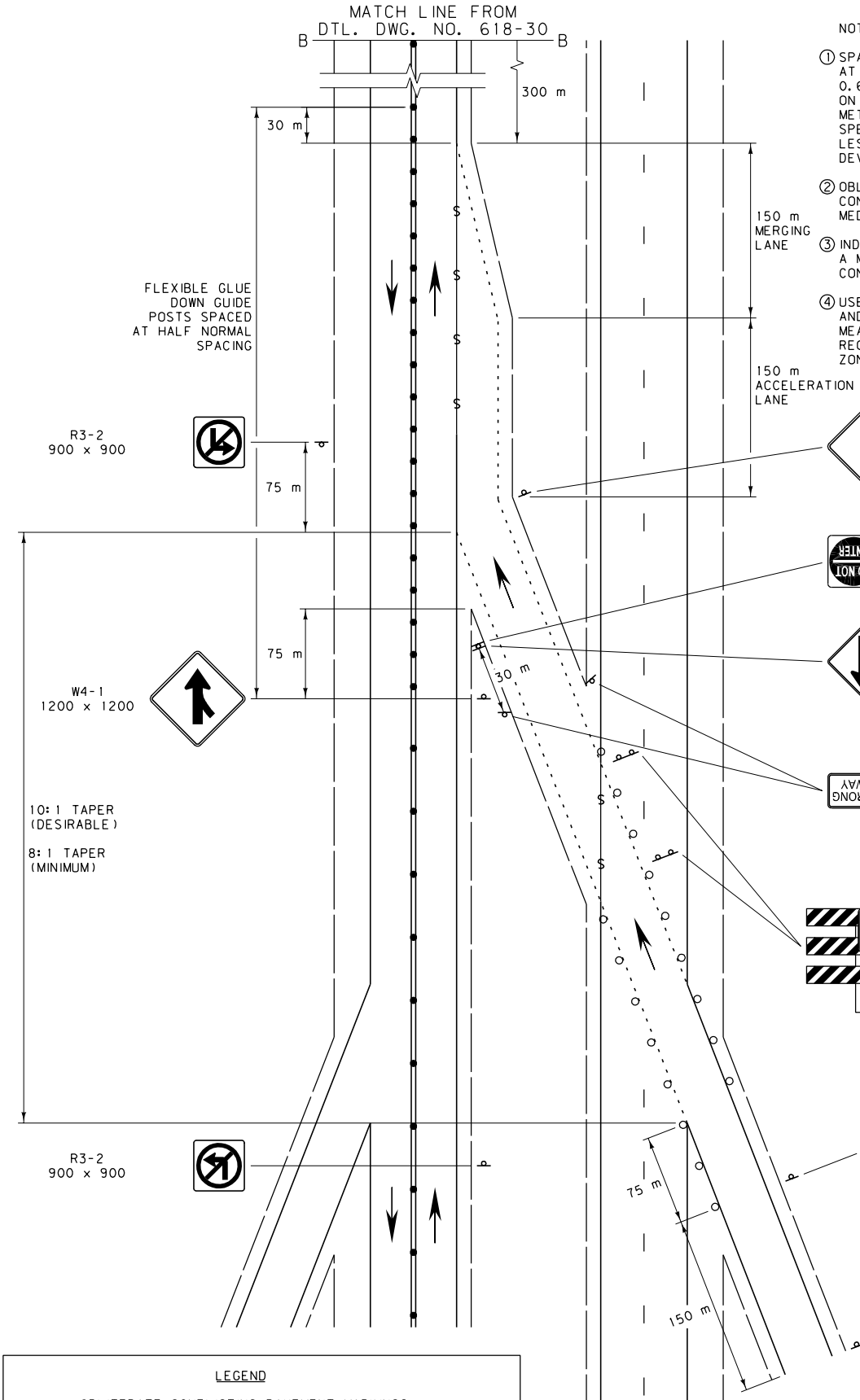

NOTES:

1. SPACE CHANNELIZING DEVICES ON TANGENTS AT INTERVALS IN METERS OF NO MORE THAN 0.6 TIMES THE SPEED LIMIT IN M.P.H. AND ON ALL TAPER SECTIONS AT INTERVALS IN METERS OF NO MORE THAN 0.3 TIMES THE SPEED LIMIT IN M.P.H. FOR SPEED LIMITS LESS THAN 35 M.P.H. SPACE CHANNELIZING DEVICES AS DIRECTED BY THE ENGINEER.
2. OBLITERATE ALL PAVEMENT MARKINGS THAT CONFLICT AT ANY TIME DURING OR AFTER MEDIAN CROSSING USE.
3. INDICATED SPACINGS ARE INTENDED TO BE A MAXIMUM AND MAY BE REDUCED IF CONDITIONS WARRANT.
4. USE MATERIALS FOR BARRICADE FRAMEWORK AND ASSEMBLY, INCLUDING ANY SIGNS AND MEANS OF ATTACHMENT, THAT MEET THE REQUIREMENTS FOR NCHRP 350 FOR WORK ZONE DEVICES.

LEGEND

- OBLITERATE CONFLICTING PAVEMENT MARKINGS
- PLASTIC DRUMS (SEE NOTES FOR SPACING)
- WHITE PLASTIC PAVEMENT MARKING TABS AT 1.5 m SPACING
- DOUBLE YELLOW PAINT OR DOUBLE PLASTIC PAVEMENT MARKING TABS AT 1.5 m SPACING
- FLEXIBLE GLUE-DOWN GUIDE POSTS ON TWO-LANE (SEE NOTES FOR SPACING EXCEPT AS SHOWN)

ALL DIMENSIONS ARE MILLIMETERS (mm) UNLESS OTHERWISE NOTED.

DETAILED DRAWING

REFERENCE STANDARD SPEC. SECTION 618

DWG. NO. 618-21

TEMPORARY ENTRANCE RAMP MEDIAN CROSSING

EFFECTIVE: FEBRUARY 2005

MDT serving you with pride — MONTANA DEPARTMENT OF TRANSPORTATION

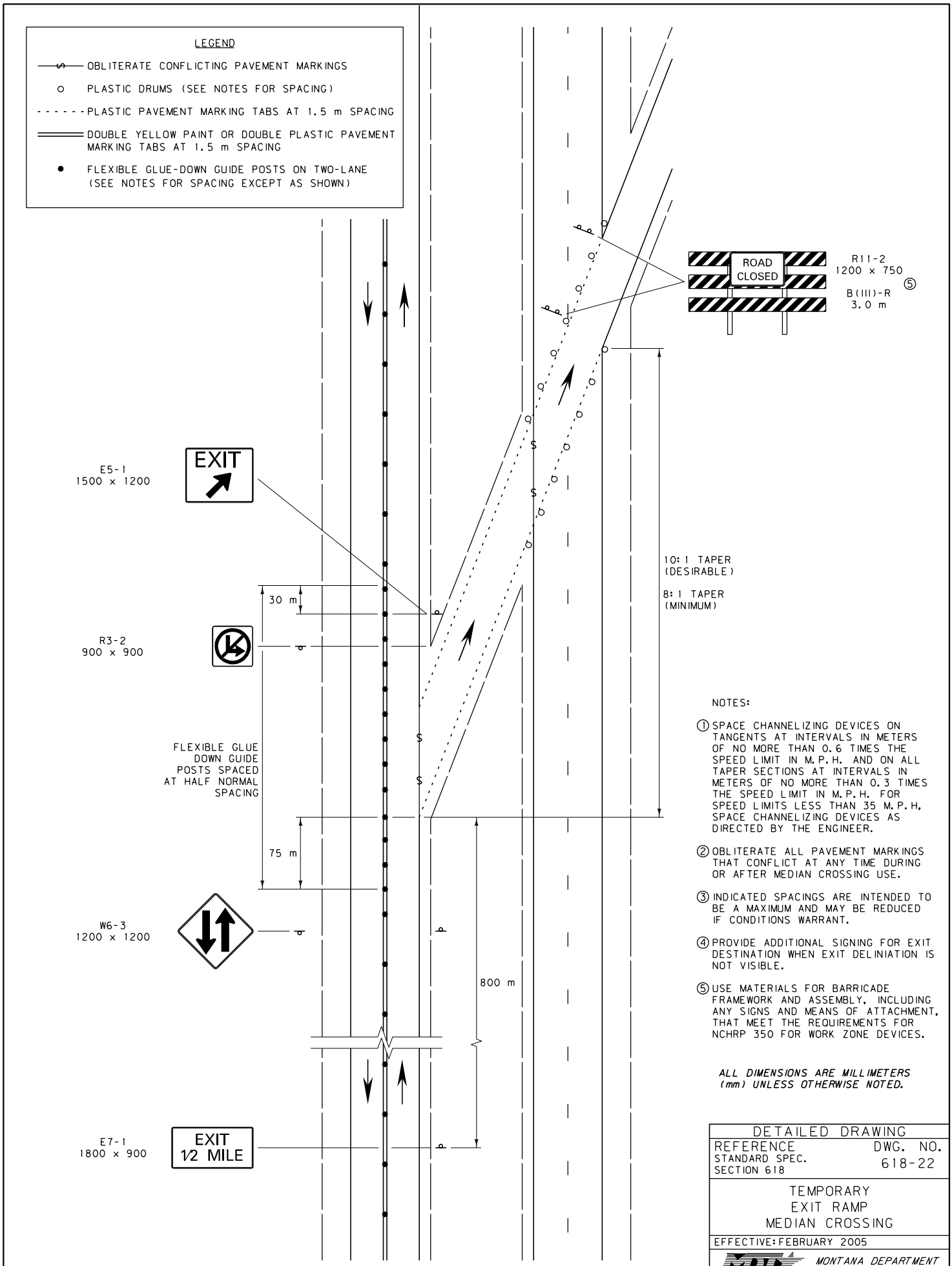

NOTES:

① SPACE CHANNELIZING DEVICES ON TANGENTS AT INTERVALS IN METERS OF NO MORE THAN 0.6 TIMES THE SPEED LIMIT IN M.P.H. AND ON ALL TAPER SECTIONS AT INTERVALS IN METERS OF NO MORE THAN 0.3 TIMES THE SPEED LIMIT IN M.P.H. FOR SPEED LIMITS LESS THAN 35 M.P.H. SPACE CHANNELIZING DEVICES AS DIRECTED BY THE ENGINEER.

② OBLITERATE ALL PAVEMENT MARKINGS THAT CONFLICT AT ANY TIME DURING OR AFTER MEDIAN CROSSING USE.

③ INDICATED SPACINGS ARE INTENDED TO BE A MAXIMUM AND MAY BE REDUCED IF CONDITIONS WARRANT.

④ PROVIDE ADDITIONAL SIGNING FOR EXIT DESTINATION WHEN EXIT DELINIATION IS NOT VISIBLE.

⑤ USE MATERIALS FOR BARRICADE FRAMEWORK AND ASSEMBLY, INCLUDING ANY SIGNS AND MEANS OF ATTACHMENT, THAT MEET THE REQUIREMENTS FOR NCHRP 350 FOR WORK ZONE DEVICES.

ALL DIMENSIONS ARE MILLIMETERS (mm) UNLESS OTHERWISE NOTED.

DETAILED DRAWING	
REFERENCE STANDARD SPEC. SECTION 618	DWG. NO. 618-22
TEMPORARY EXIT RAMP MEDIAN CROSSING	
EFFECTIVE: FEBRUARY 2005	

MDT serving you with pride — MONTANA DEPARTMENT OF TRANSPORTATION

NOTE:

THIS SEQUENCE OF SIGNS IS IDENTICAL FOR BOTH WORK ZONES SHOWN ON THIS DETAIL.

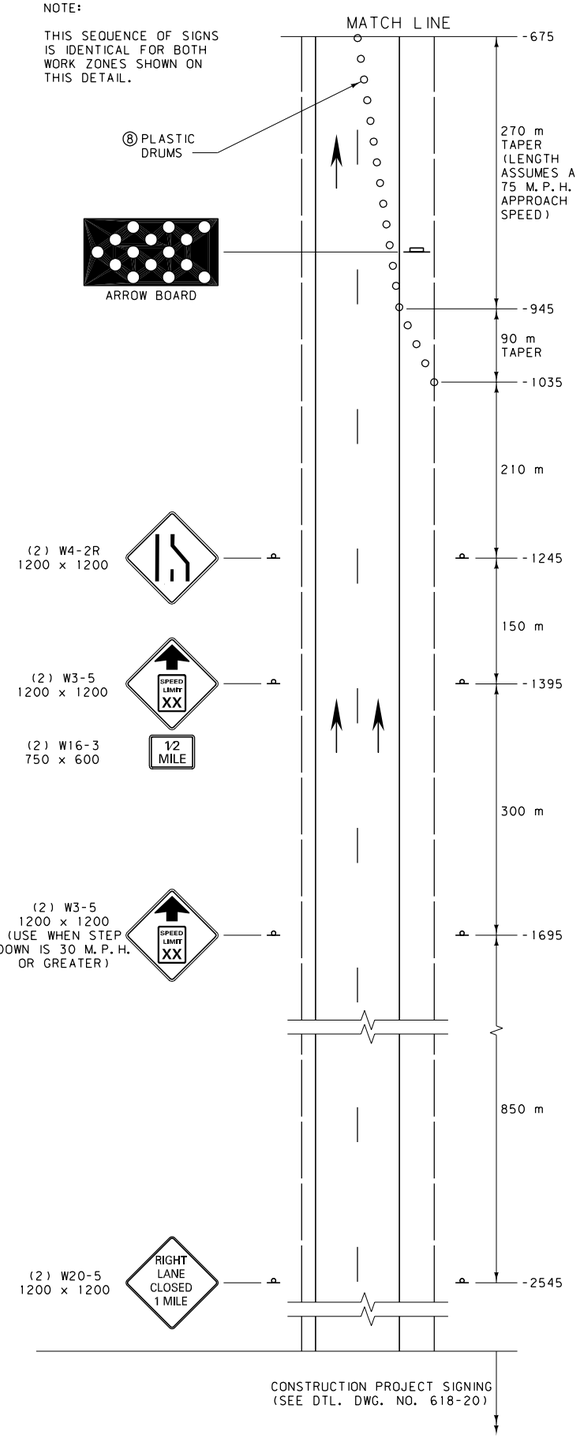

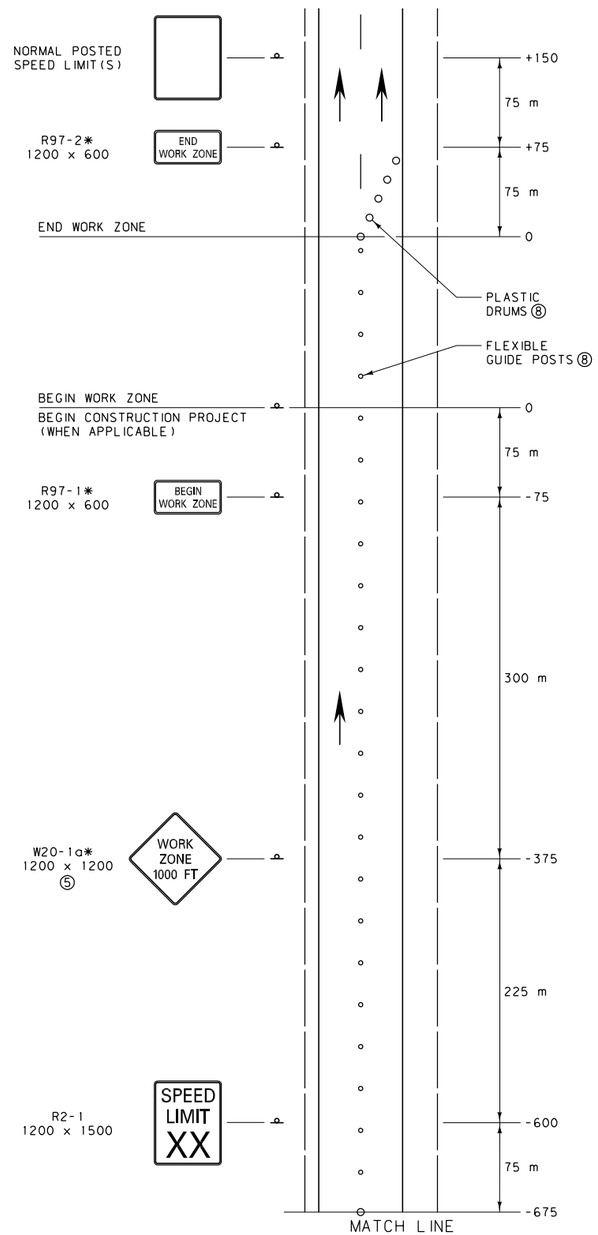

WORK ZONE WITH NO FLAGGER

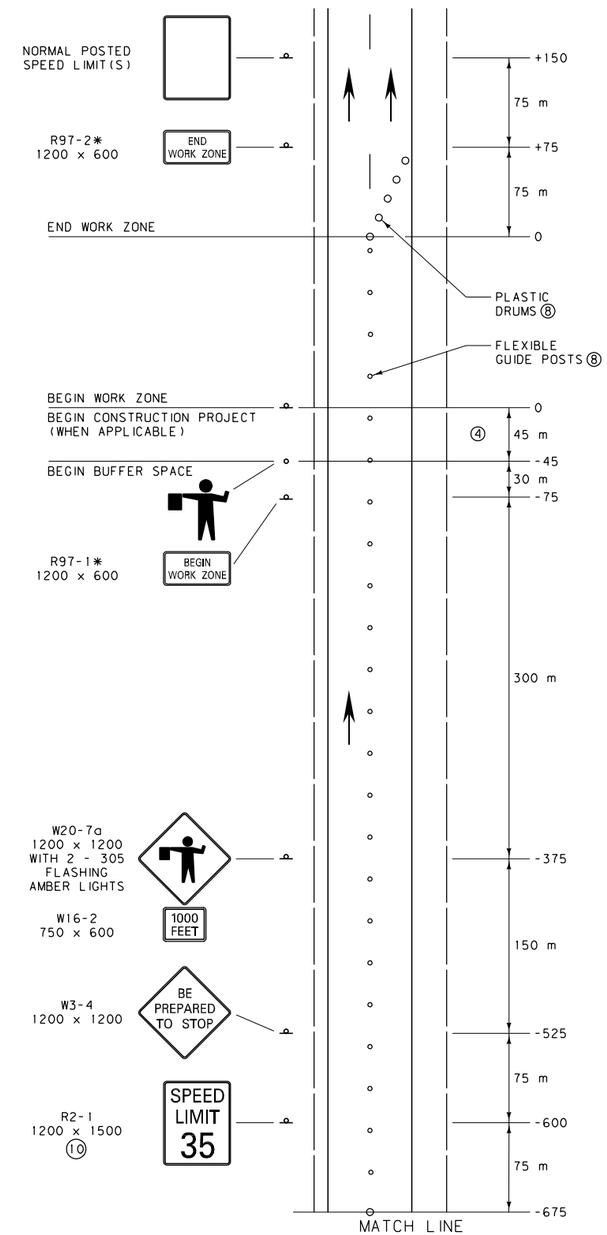

WORK ZONE WITH FLAGGER

NOTES:

① THESE SIGN LAYOUTS WORK IN CONJUNCTION WITH THE PERMANENT LAYOUT ILLUSTRATED ON DTL. DWG. NO. 618-20 FOR WORK ZONES LOCATED AT THE BEGIN AND END OF THE CONSTRUCTION PROJECT.

② INCLUDE REGULATORY SIGNING ONLY IF THERE IS REASON TO RESTRICT SPEED WITHIN THE WORK ZONE. MODIFY REGULATORY SIGNS TO MATCH ADJACENT REGULATIONS.

③ THE WORK ZONE REFERS TO THE AREA WITHIN THE CONSTRUCTION PROJECT WHERE WORK IS ACTUALLY TAKING PLACE.

④ THE BUFFER SPACE MAY BE INCREASED FOR DOWNGRADES AND OTHER CONDITIONS THAT AFFECT STOPPING DISTANCE.

⑤ USE MORE SPECIFIC SIGNS, WHERE APPLICABLE, SUCH AS W8-3 "PAVEMENT ENDS."

⑥ XX = SPEED DETERMINED BY THE ENGINEER.

⑦ PROVIDE A SECOND FLAGGER WHEN REQUIRED BY STANDARD SPECIFICATIONS, SECTION 618.

⑧ SPACE FLEXIBLE GUIDE POSTS ON TANGENTS AT INTERVALS IN METERS OF NO MORE THAN 0.6 TIMES THE SPEED LIMIT IN M.P.H. SPACE PLASTIC DRUMS IN ALL TAPER SECTIONS AT INTERVALS IN METERS OF NO MORE THAN 0.3 TIMES THE SPEED LIMIT IN M.P.H. FOR SPEED LIMITS LESS THAN 35 M.P.H., SPACE CHANNELIZING DEVICES AS DIRECTED BY THE ENGINEER.

⑨ WHEN PORTABLE SIGNS ARE USED, PLACE AS DIRECTED BY THE ENGINEER.

⑩ IF FLAGGER IS MORE THAN 1.6 km FROM THE LANE CLOSURE, INCLUDE W3-5 SIGNS, AS REQUIRED.

* DENOTES SIGNS THAT ARE UNIQUE TO MONTANA.

ALL DIMENSIONS ARE MILLIMETERS (mm) UNLESS OTHERWISE NOTED.

DETAILED DRAWING	
REFERENCE STANDARD SPEC. SECTION 618	DWG. NO. 618-24
DIVIDED FOUR-LANE CONSTRUCTION PROJECT WORK ZONES	
EFFECTIVE: FEBRUARY 2005	
serving you with pride	MONTANA DEPARTMENT OF TRANSPORTATION

NOTE:

THIS SEQUENCE OF SIGNS IS IDENTICAL FOR BOTH WORK ZONES SHOWN ON THIS DETAIL.

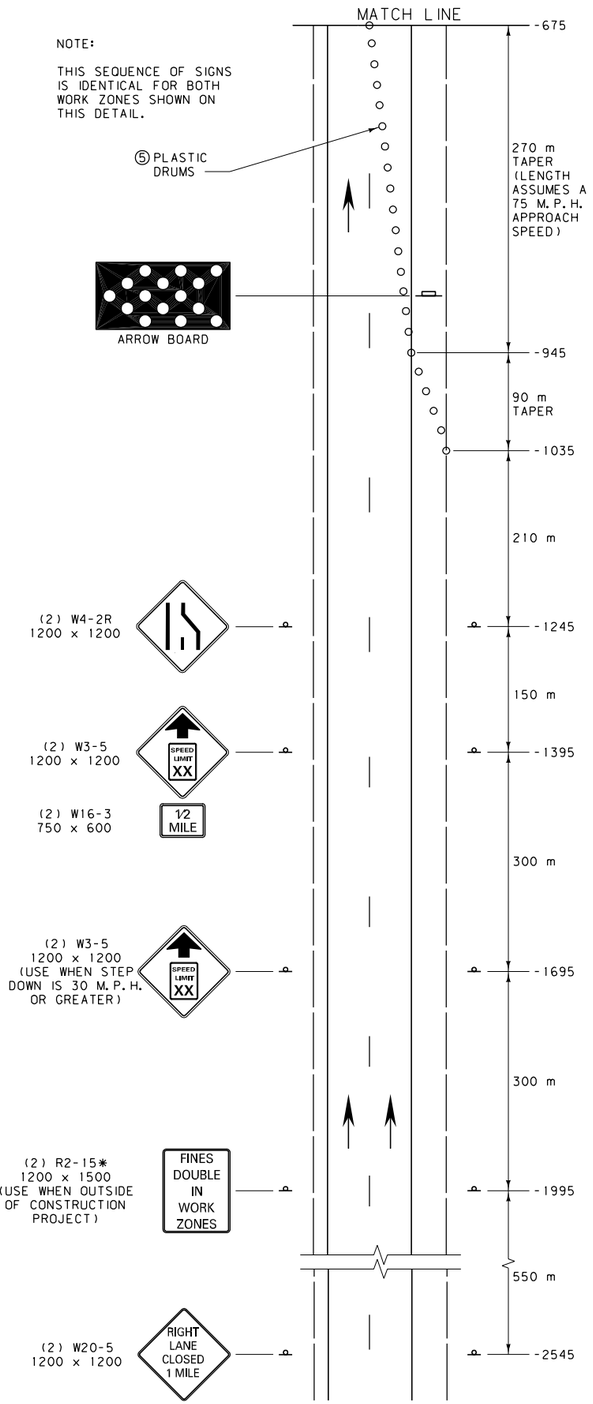

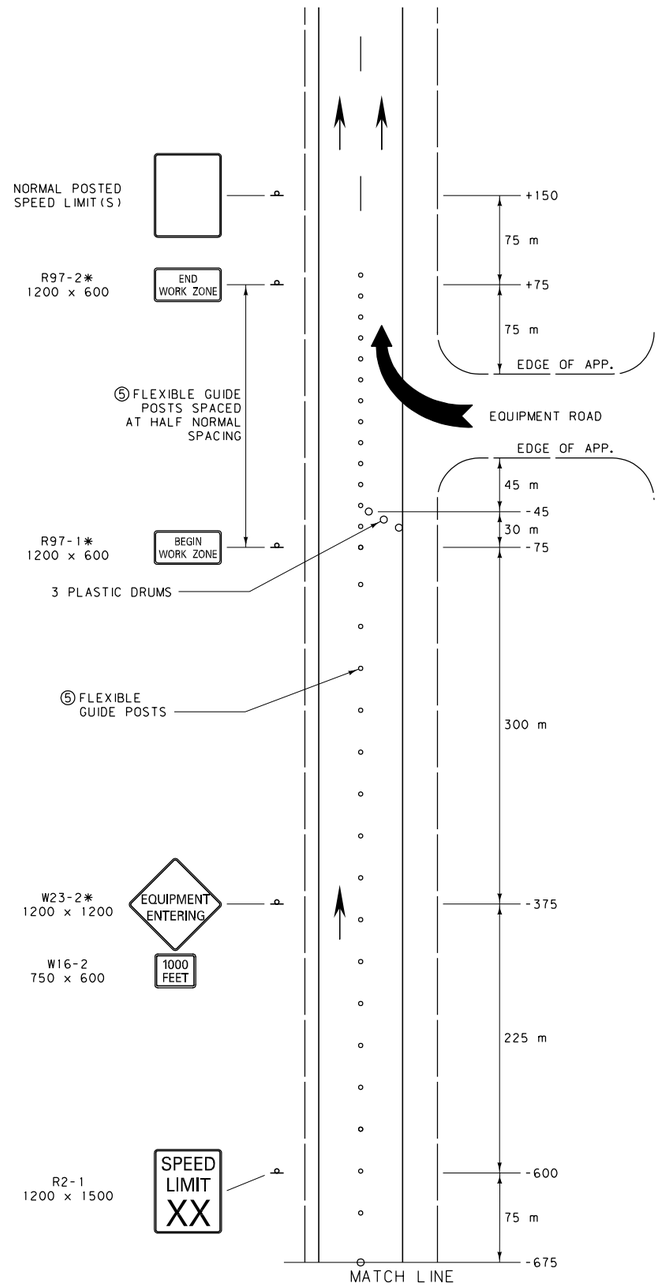

EQUIPMENT ENTRANCE WITH NO FLAGGER

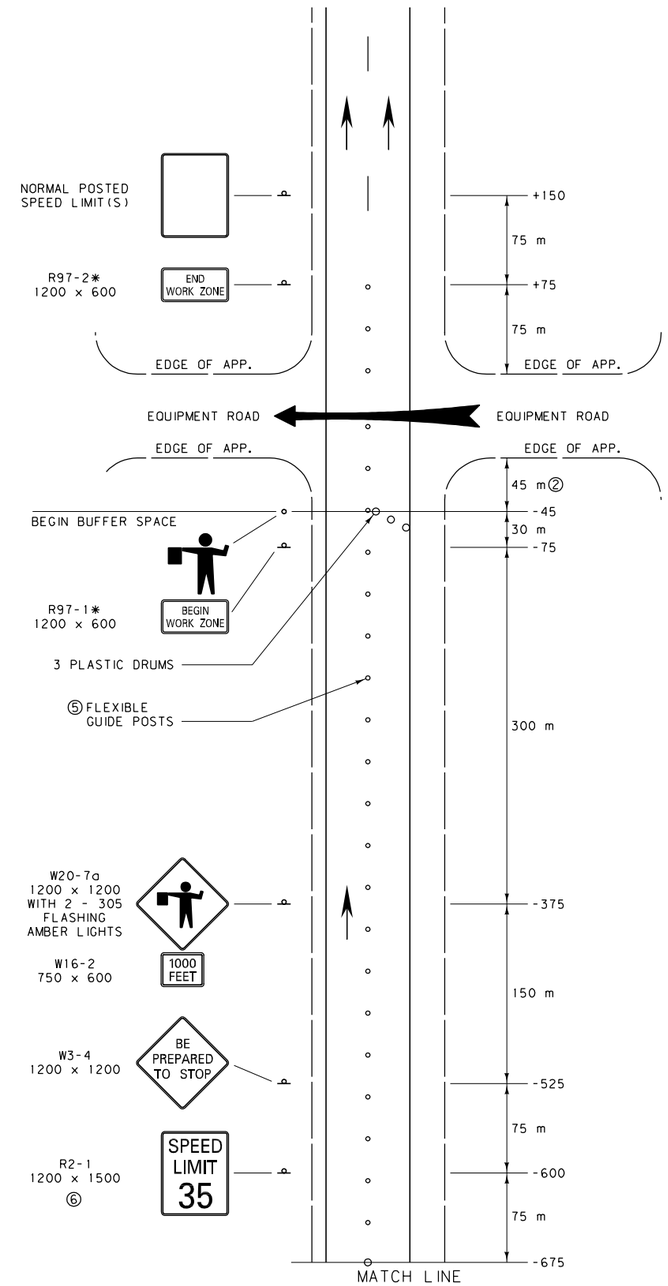

EQUIPMENT ENTRANCE WITH FLAGGER

NOTES:

① INCLUDE REGULATORY SIGNING ONLY IF THERE IS REASON TO RESTRICT SPEED WITHIN THE WORK ZONE. MODIFY REGULATORY SIGNS TO MATCH ADJACENT REGULATIONS.

② THE BUFFER SPACE MAY BE INCREASED FOR DOWNGRADES AND OTHER CONDITIONS THAT AFFECT STOPPING DISTANCE.

③ XX = SPEED DETERMINED BY THE ENGINEER.

④ THE WORK ZONE REFERS TO THE AREA WHERE WORK IS ACTUALLY TAKING PLACE. WHEN THIS OCCURS OUTSIDE OF A CONSTRUCTION PROJECT, INCLUDE THE R2-15* SIGN.

⑤ SPACE FLEXIBLE GUIDE POSTS ON TANGENTS AT INTERVALS IN METERS OF NO MORE THAN 0.6 TIMES THE SPEED LIMIT IN M.P.H. SPACE PLASTIC DRUMS IN ALL TAPER SECTIONS AT INTERVALS IN METERS OF NO MORE THAN 0.3 TIMES THE SPEED LIMIT IN M.P.H. FOR SPEED LIMITS LESS THAN 35 M.P.H., SPACE CHANNELIZING DEVICES AS DIRECTED BY THE ENGINEER.

⑥ IF FLAGGER IS MORE THAN 1.6 km FROM THE LANE CLOSURE, INCLUDE W3-5 SIGNS, AS REQUIRED.

* DENOTES SIGNS THAT ARE UNIQUE TO MONTANA.

ALL DIMENSIONS ARE MILLIMETERS (mm) UNLESS OTHERWISE NOTED.

DETAILED DRAWING	
REFERENCE STANDARD SPEC. SECTION 618	DWG. NO. 618-27
DIVIDED FOUR-LANE EQUIPMENT ENTRANCES	
EFFECTIVE: FEBRUARY 2005	
serving you with pride	MONTANA DEPARTMENT OF TRANSPORTATION

NOTE:

THIS SEQUENCE OF SIGNS IS IDENTICAL FOR BOTH WORK ZONES SHOWN ON THIS DETAIL.

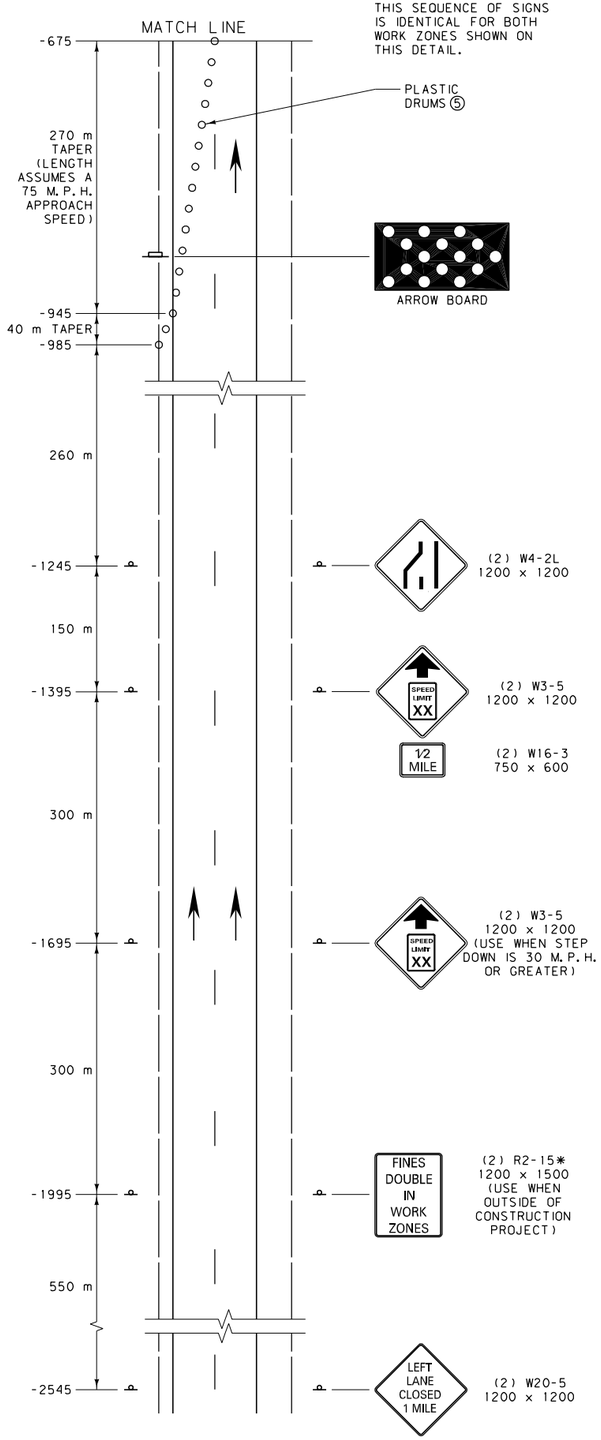

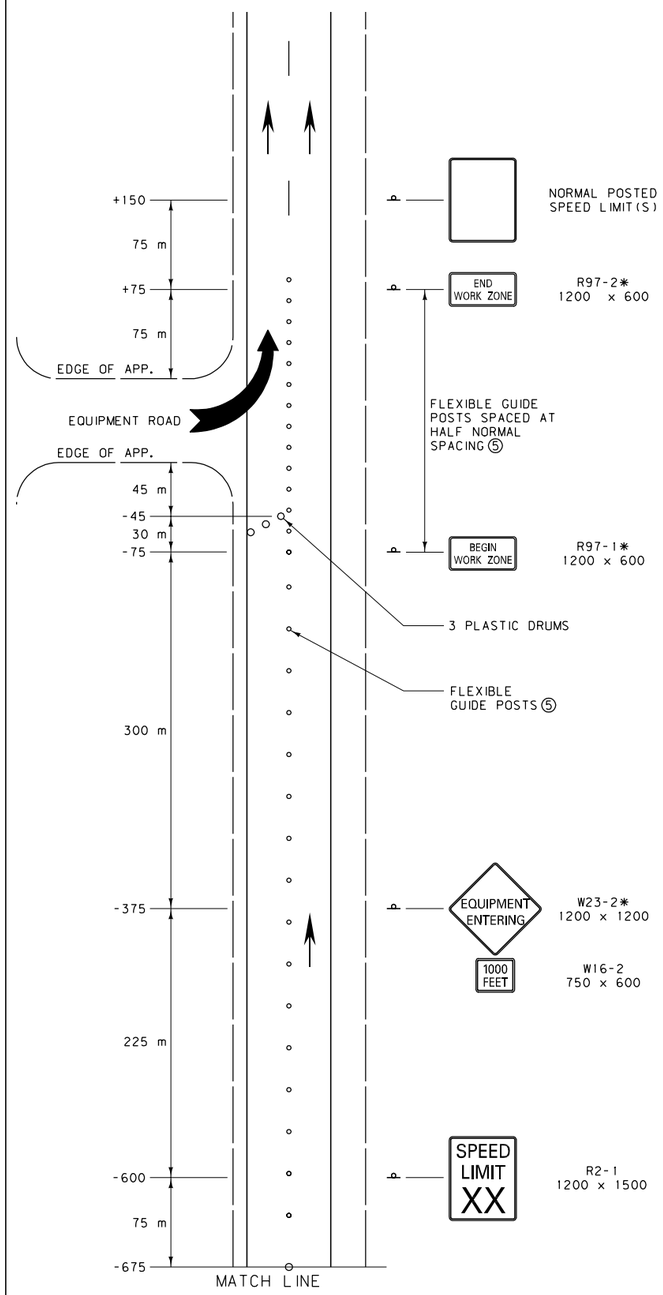

MEDIAN CROSSING WITH NO FLAGGER

(USE WITH WIDE MEDIANS)

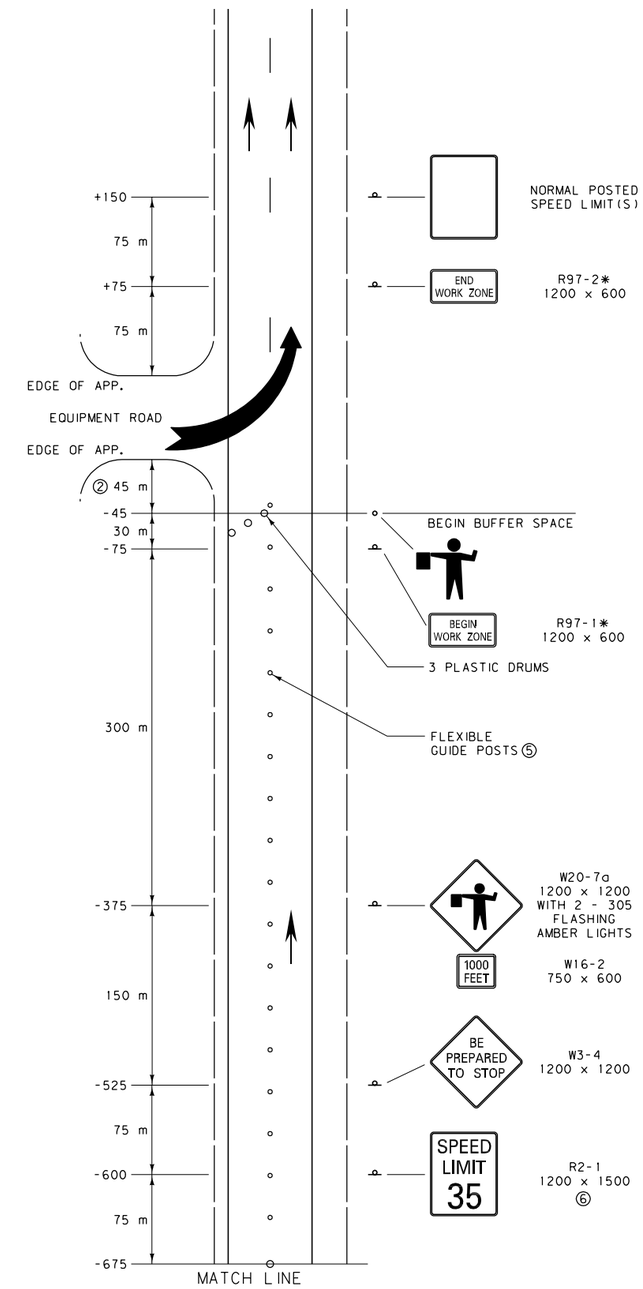

MEDIAN CROSSING WITH FLAGGER

(USE WITH NARROW MEDIANS)

NOTES:

① INCLUDE REGULATORY SIGNING ONLY IF THERE IS REASON TO RESTRICT SPEED WITHIN THE WORK ZONE. MODIFY REGULATORY SIGNS TO MATCH ADJACENT REGULATIONS.

② THE BUFFER SPACE MAY BE INCREASED FOR DOWNGRADES AND OTHER CONDITIONS THAT AFFECT STOPPING DISTANCE.

③ XX = SPEED DETERMINED BY THE ENGINEER.

④ THE WORK ZONE REFERS TO THE AREA WHERE WORK IS ACTUALLY TAKING PLACE. WHEN THIS OCCURS OUTSIDE OF A CONSTRUCTION PROJECT, INCLUDE THE W20-1 AND R2-15* SIGNS.

⑤ SPACE FLEXIBLE GUIDE POSTS ON TANGENTS AT INTERVALS IN METERS OF NO MORE THAN 0.6 TIMES THE SPEED LIMIT IN M.P.H. SPACE PLASTIC DRUMS IN ALL TAPER SECTIONS AT INTERVALS IN METERS OF NO MORE THAN 0.3 TIMES THE SPEED LIMIT IN M.P.H. FOR SPEED LIMITS LESS THAN 35 M.P.H., SPACE CHANNELIZING DEVICES AS DIRECTED BY THE ENGINEER.

⑥ IF FLAGGER IS MORE THAN 1.6 km FROM THE LANE CLOSURE, INCLUDE W3-5 SIGNS, AS REQUIRED.

* DENOTES SIGNS THAT ARE UNIQUE TO MONTANA.

ALL DIMENSIONS ARE MILLIMETERS (mm) UNLESS OTHERWISE NOTED.

DETAILED DRAWING	
REFERENCE STANDARD SPEC. SECTION 618	DWG. NO. 618-28
DIVIDED FOUR-LANE MEDIAN CROSSINGS	
EFFECTIVE: FEBRUARY 2005	
serving you with pride	MONTANA DEPARTMENT OF TRANSPORTATION

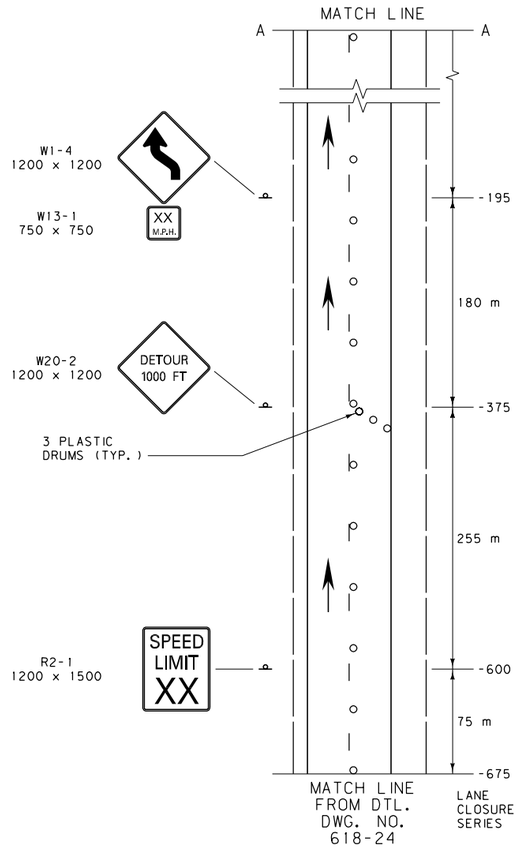

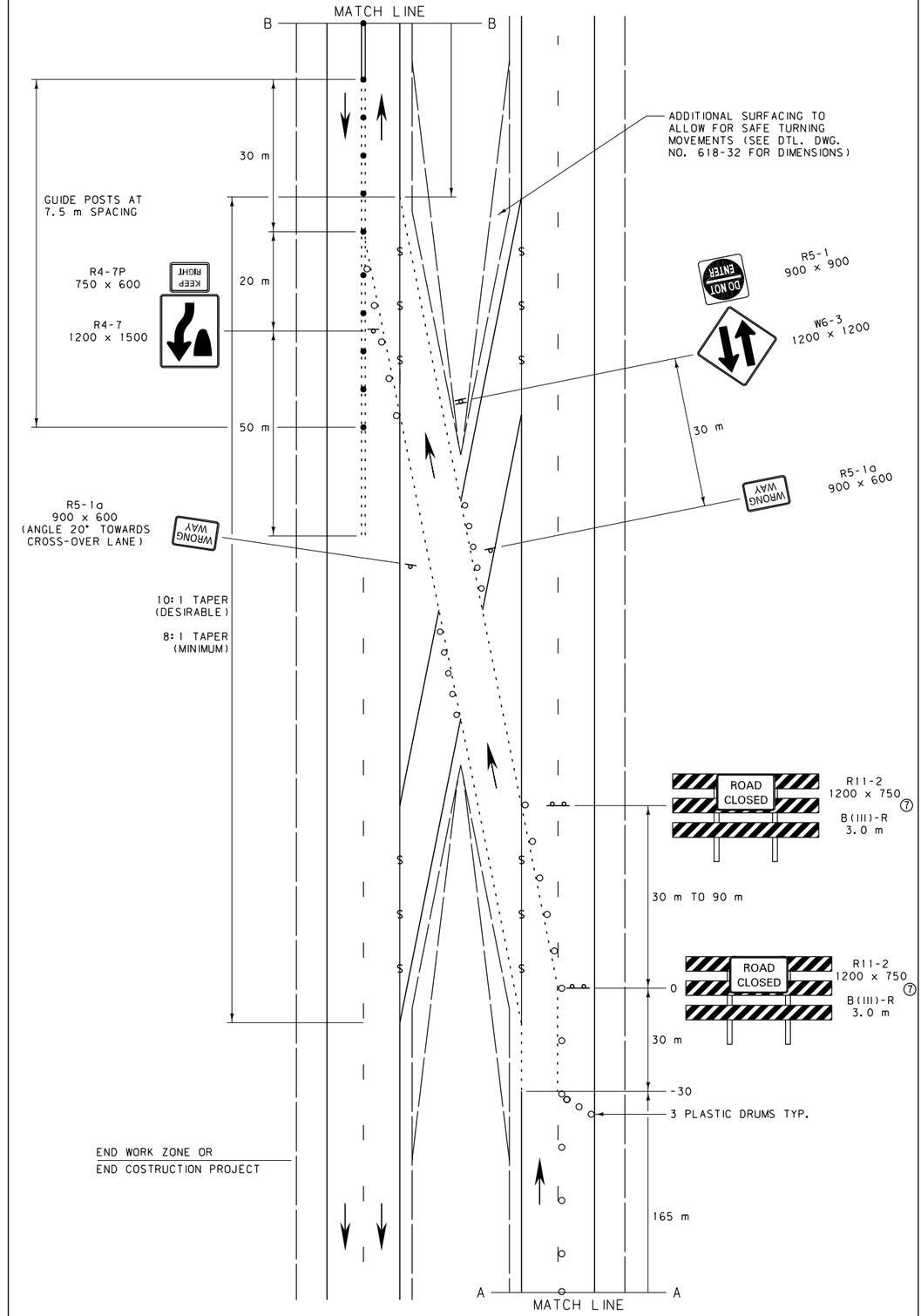

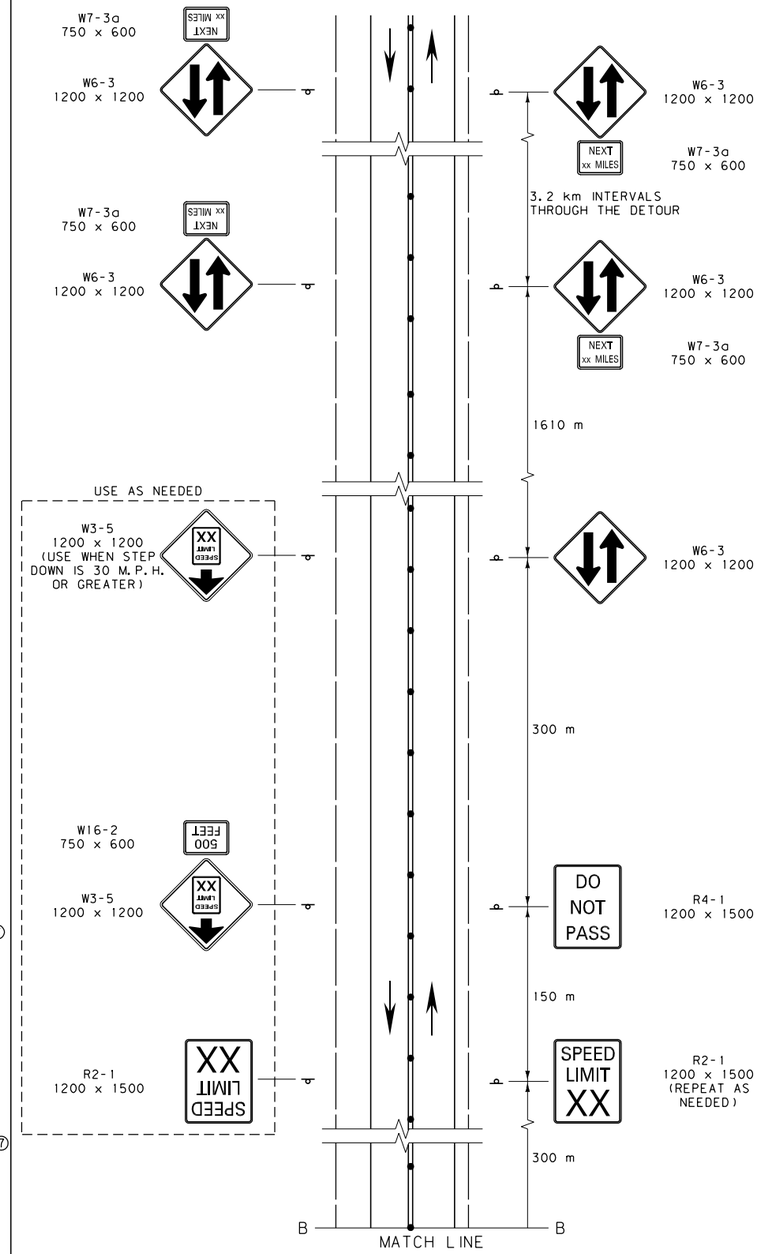

LEGEND

- OBLITERATE CONFLICTING PAVEMENT MARKINGS
- PLASTIC DRUMS (SEE NOTES FOR SPACING)
- PLASTIC PAVEMENT MARKING TABS AT 1.5 m SPACING
- DOUBLE YELLOW PAINT OR DOUBLE PLASTIC PAVEMENT MARKING TABS AT 1.5 m SPACING
- FLEXIBLE GLUE-DOWN GUIDE POSTS ON TWO-LANE (SEE NOTES FOR SPACING EXCEPT AS SHOWN)

NOTES:

1. INCLUDE REGULATORY SIGNING ONLY AS REQUIRED. MODIFY REGULATORY SIGNS TO MATCH ADJACENT REGULATIONS.
2. THE WORK ZONE REFERS TO THE AREA WITHIN THE CONSTRUCTION PROJECT WHERE WORK IS ACTUALLY TAKING PLACE.
3. INDICATED SPACINGS ARE INTENDED TO BE A MAXIMUM AND MAY BE REDUCED IF CONDITIONS WARRANT.
4. XX = SPEED DETERMINED BY THE MEDIAN CROSSING DESIGN SPEED OR THE ENGINEER.
5. SPACE CHANNELIZING DEVICES ON TANGENTS AT INTERVALS IN METERS OF NO MORE THAN 0.6 TIMES THE SPEED LIMIT IN M.P.H. AND ON ALL TAPER SECTIONS AT INTERVALS IN METERS OF NO MORE THAN 0.3 TIMES THE SPEED LIMIT IN M.P.H. FOR SPEED LIMITS LESS THAN 35 M.P.H., SPACE CHANNELIZING DEVICES AS DIRECTED BY THE ENGINEER.
6. OBLITERATE ALL PAVEMENT MARKINGS THAT CONFLICT AT ANY TIME DURING OR AFTER MEDIAN CROSSING USE.
7. USE MATERIALS FOR BARRICADE FRAMEWORK AND ASSEMBLY, INCLUDING ANY SIGNS AND MEANS OF ATTACHMENT, THAT MEET THE REQUIREMENTS FOR NCHRP 350 FOR WORK ZONE DEVICES.

TYP. CROSS-OVER SECTION

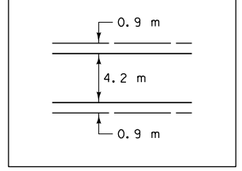

ALL DIMENSIONS ARE MILLIMETERS (mm) UNLESS OTHERWISE NOTED.

DETAILED DRAWING	
REFERENCE STANDARD SPEC. SECTION 618	DWG. NO. 618-30
TEMPORARY FOUR-LANE TO TWO-LANE MEDIAN CROSSING	
EFFECTIVE: FEBRUARY 2005	
serving you with pride	MONTANA DEPARTMENT OF TRANSPORTATION

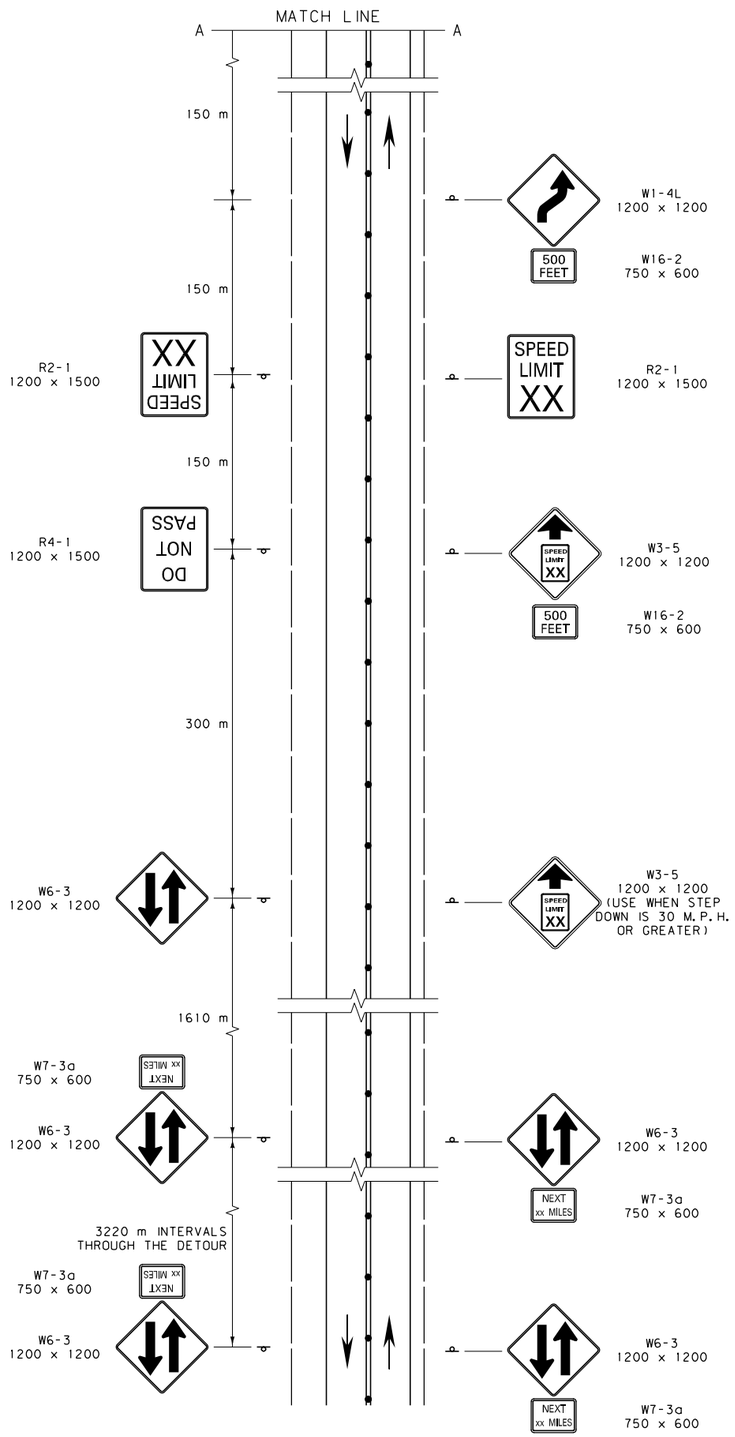

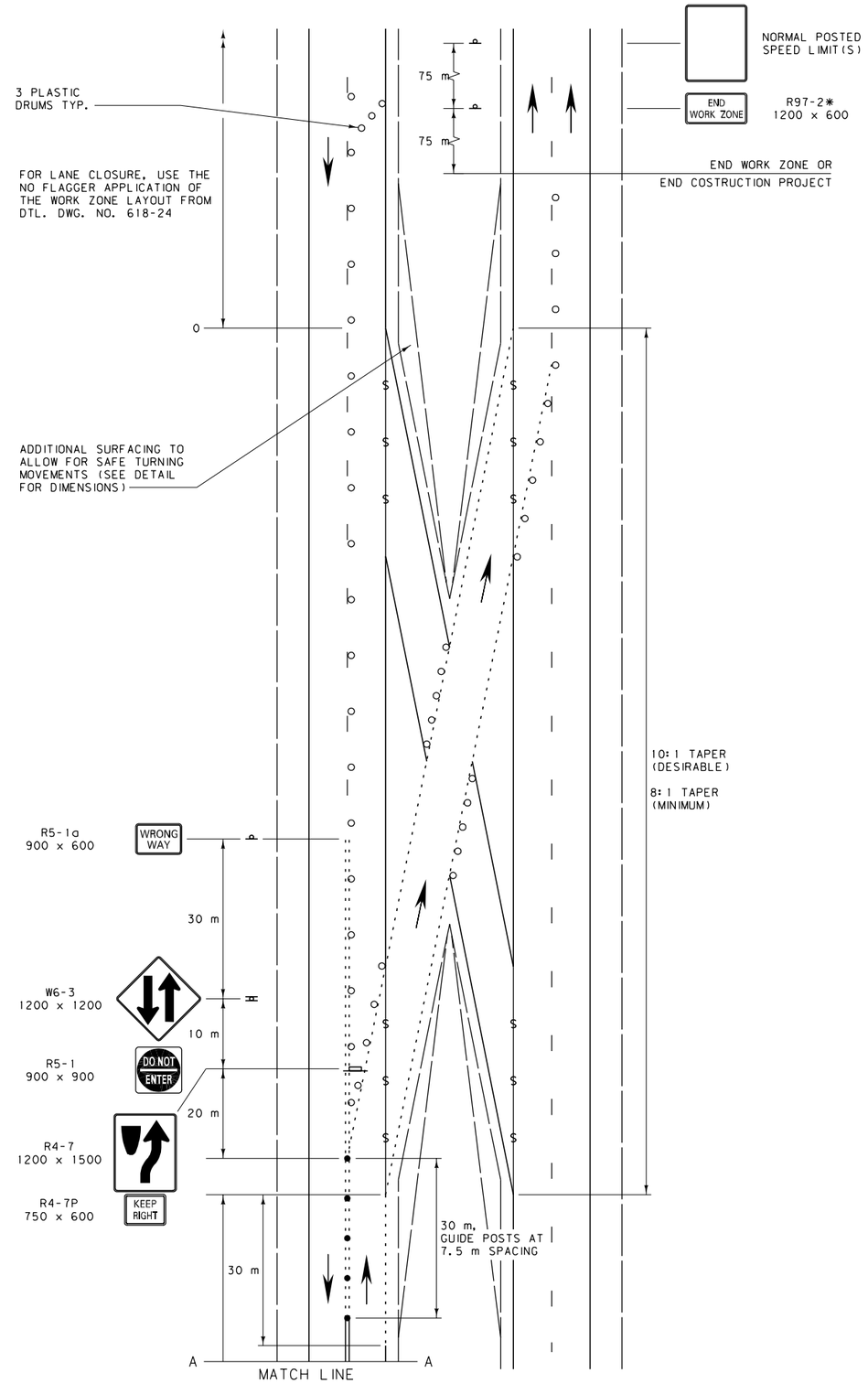

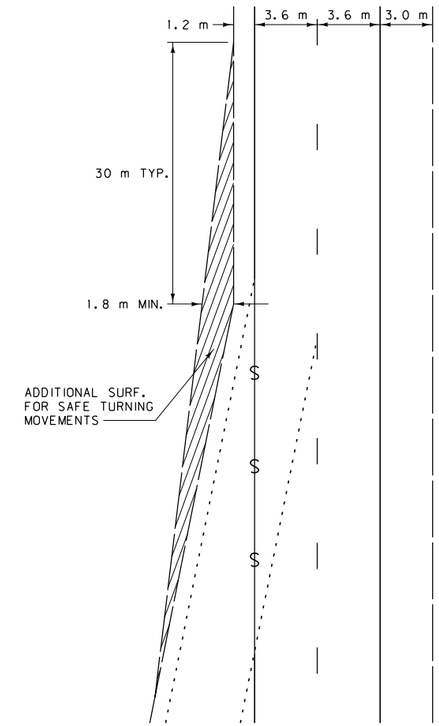

ADDITIONAL SURFACING DETAIL

LEGEND

- OBLITERATE CONFLICTING PAVEMENT MARKINGS
- PLASTIC DRUMS (SEE NOTES FOR SPACING)
- PLASTIC PAVEMENT MARKING TABS AT 1.5 m SPACING
- DOUBLE YELLOW PAINT OR DOUBLE PLASTIC PAVEMENT MARKING TABS AT 1.5 m SPACING
- FLEXIBLE GLUE-DOWN GUIDE POSTS ON TWO-LANE (SEE NOTES FOR SPACING EXCEPT AS SHOWN)

NOTES:

1. INCLUDE REGULATORY SIGNING ONLY AS REQUIRED. MODIFY REGULATORY SIGNS TO MATCH ADJACENT REGULATIONS.
2. THE WORK ZONE REFERS TO THE AREA WITHIN THE CONSTRUCTION PROJECT WHERE WORK IS ACTUALLY TAKING PLACE.
3. XX = SPEED DETERMINED BY THE MEDIAN CROSSING DESIGN SPEED OR THE ENGINEER.
4. SEE DTL. DWG. NO. 618-30 FOR TYPICAL CROSS-OVER SECTION DIMENSIONS.
5. INDICATED SPACINGS ARE INTENDED TO BE A MAXIMUM AND MAY BE REDUCED IF CONDITIONS WARRANT.
6. SPACE CHANNELIZING DEVICES ON TANGENTS AT INTERVALS IN METERS OF NO MORE THAN 0.6 TIMES THE SPEED LIMIT IN M.P.H. AND ON ALL TAPER SECTIONS AT INTERVALS IN METERS OF NO MORE THAN 0.3 TIMES THE SPEED LIMIT IN M.P.H. FOR SPEED LIMITS LESS THAN 35 M.P.H., SPACE CHANNELIZING DEVICES AS DIRECTED BY THE ENGINEER.
7. OBLITERATE ALL PAVEMENT MARKINGS THAT CONFLICT AT ANY TIME DURING OR AFTER MEDIAN CROSSING USE.

ALL DIMENSIONS ARE MILLIMETERS (mm) UNLESS OTHERWISE NOTED.

DETAILED DRAWING	
REFERENCE STANDARD SPEC. SECTION 618	DWG. NO. 618-32
TEMPORARY TWO-LANE TO FOUR-LANE MEDIAN CROSSING	
EFFECTIVE: FEBRUARY 2005	
serving you with pride	MONTANA DEPARTMENT OF TRANSPORTATION

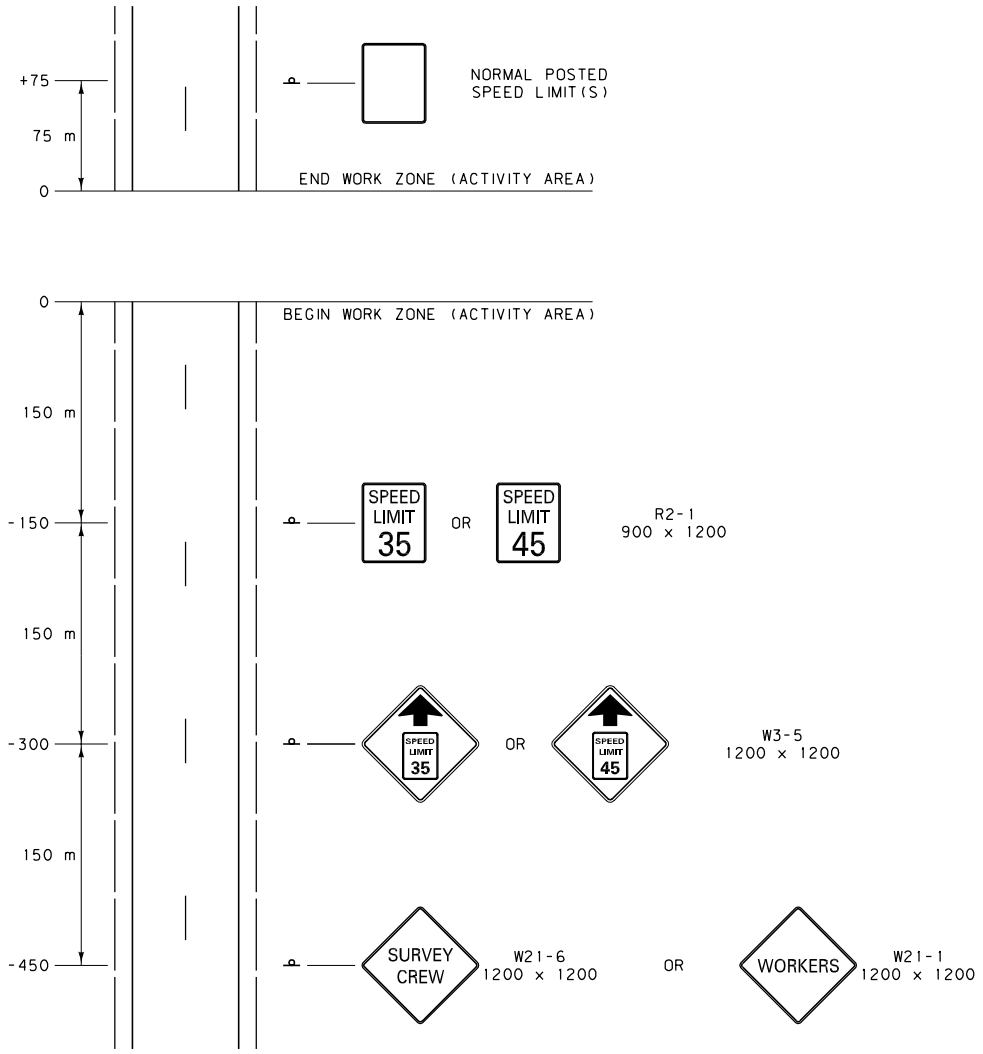

NOTES:

1. SHORT DURATION ACTIVITIES ARE DEFINED AS THOSE LASTING UP TO ONE HOUR.
2. USE THIS SIGN LAYOUT WHEN WORK IS TO TAKE PLACE ON THE TRAVELED WAY. SIGNING FOR WORK ON OR NEAR THE SHOULDER MAY BE LIMITED TO THE USE OF ONE 1200 mm WARNING SIGN FOR EACH TRAVEL DIRECTION. SIGNING FOR WORK OUTSIDE THE SHOULDER MAY BE LIMITED TO THE USE OF ONE 1200 mm WARNING SIGN FOR THE TRAVEL DIRECTION ADJACENT TO THE WORK.
3. SIGN BOTH TRAVEL DIRECTIONS ON TWO-LANE, TWO-WAY ROADWAYS OR BOTH SHOULDERS ON TWO-LANE, ONE-WAY ROADWAYS.
4. PROVIDE AT LEAST THE DISTANCE SHOWN FOR DELINEATOR MOUNTED SIGNS.
5. SEE DTL. DWG. NO. 618-36 "SHORT-TERM STATIONARY CREW SIGNING" IF THE DOUBLE PENALTY REGULATION IS TO BE UTILIZED.

ALL DIMENSIONS ARE MILLIMETERS (mm) UNLESS OTHERWISE NOTED.

DETAILED DRAWING	
REFERENCE STANDARD SPEC. SECTION 618	DWG. NO. 618-34
SHORT DURATION CREW SIGNING	
EFFECTIVE: FEBRUARY 2005	
serving you with pride	MONTANA DEPARTMENT OF TRANSPORTATION

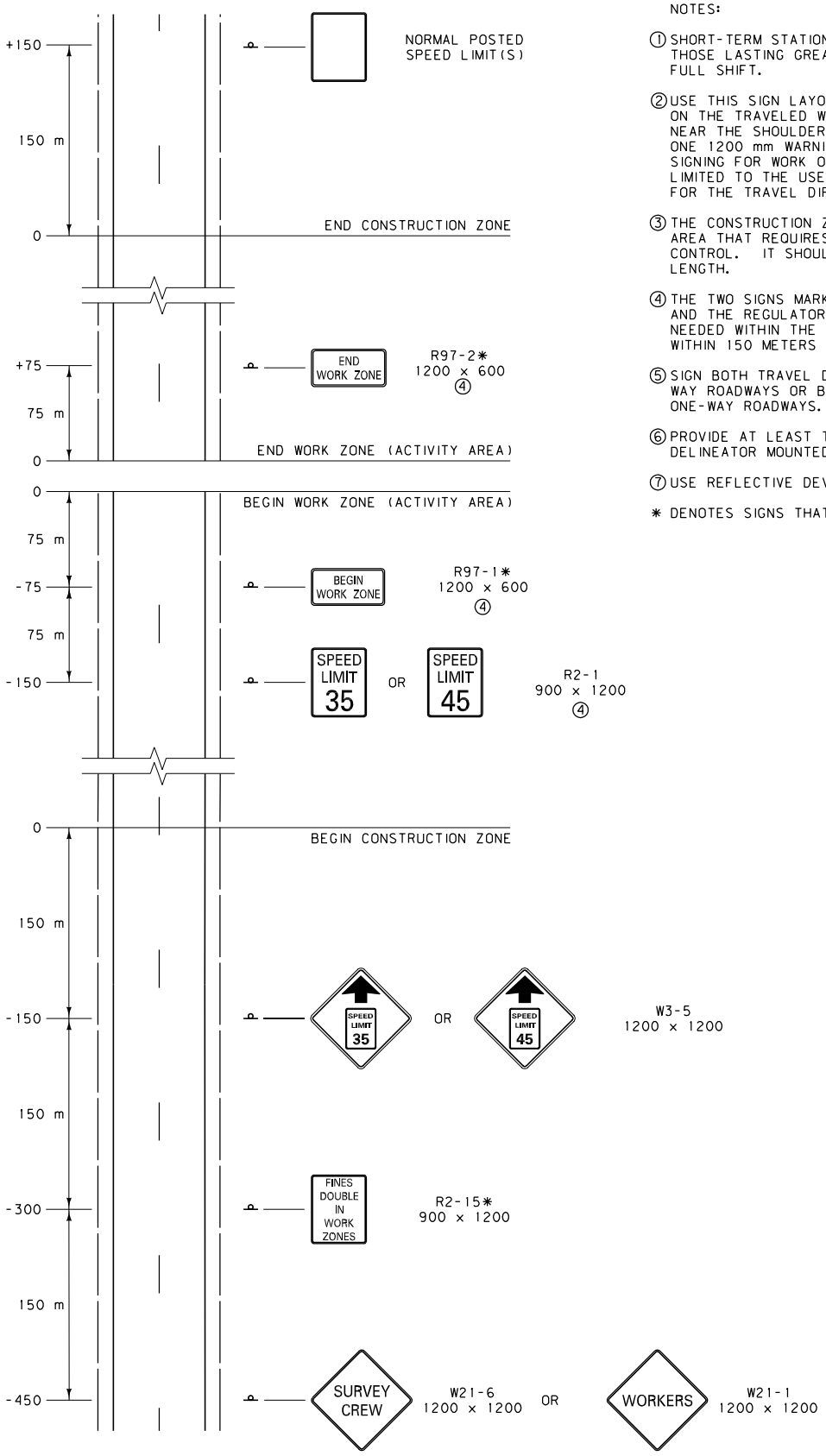

NOTES:

① SHORT-TERM STATIONARY ACTIVITIES ARE DEFINED AS THOSE LASTING GREATER THAN ONE HOUR, UP TO A FULL SHIFT.

② USE THIS SIGN LAYOUT WHEN WORK IS TO TAKE PLACE ON THE TRAVELED WAY. SIGNING FOR WORK ON OR NEAR THE SHOULDER MAY BE LIMITED TO THE USE OF ONE 1200 mm WARNING SIGN FOR EACH TRAVEL DIRECTION. SIGNING FOR WORK OUTSIDE THE SHOULDER MAY BE LIMITED TO THE USE OF ONE 1200 mm WARNING SIGN FOR THE TRAVEL DIRECTION ADJACENT TO THE WORK.

③ THE CONSTRUCTION ZONE REFERS TO THE GENERAL AREA THAT REQUIRES TEMPORARY WORK ZONE TRAFFIC CONTROL. IT SHOULD NOT EXCEED 4.8 KILOMETERS IN LENGTH.

④ THE TWO SIGNS MARKING THE WORK ZONE BOUNDARIES AND THE REGULATORY SPEED SIGN MUST MOVE AS NEEDED WITHIN THE CONSTRUCTION ZONE TO REMAIN WITHIN 150 METERS OF THE WORK ACTIVITY.

⑤ SIGN BOTH TRAVEL DIRECTIONS ON TWO-LANE, TWO-WAY ROADWAYS OR BOTH SHOULDERS ON TWO-LANE, ONE-WAY ROADWAYS.

⑥ PROVIDE AT LEAST THE DISTANCE SHOWN FOR DELINEATOR MOUNTED SIGNS.

⑦ USE REFLECTIVE DEVICES.

* DENOTES SIGNS THAT ARE UNIQUE TO MONTANA.

ALL DIMENSIONS ARE MILLIMETERS (mm) UNLESS OTHERWISE NOTED.

DETAILED DRAWING	
REFERENCE STANDARD SPEC. SECTION 618	DWG. NO. 618-36
SHORT-TERM STATIONARY CREW SIGNING	
EFFECTIVE: FEBRUARY 2005	
serving you with pride	MONTANA DEPARTMENT OF TRANSPORTATION

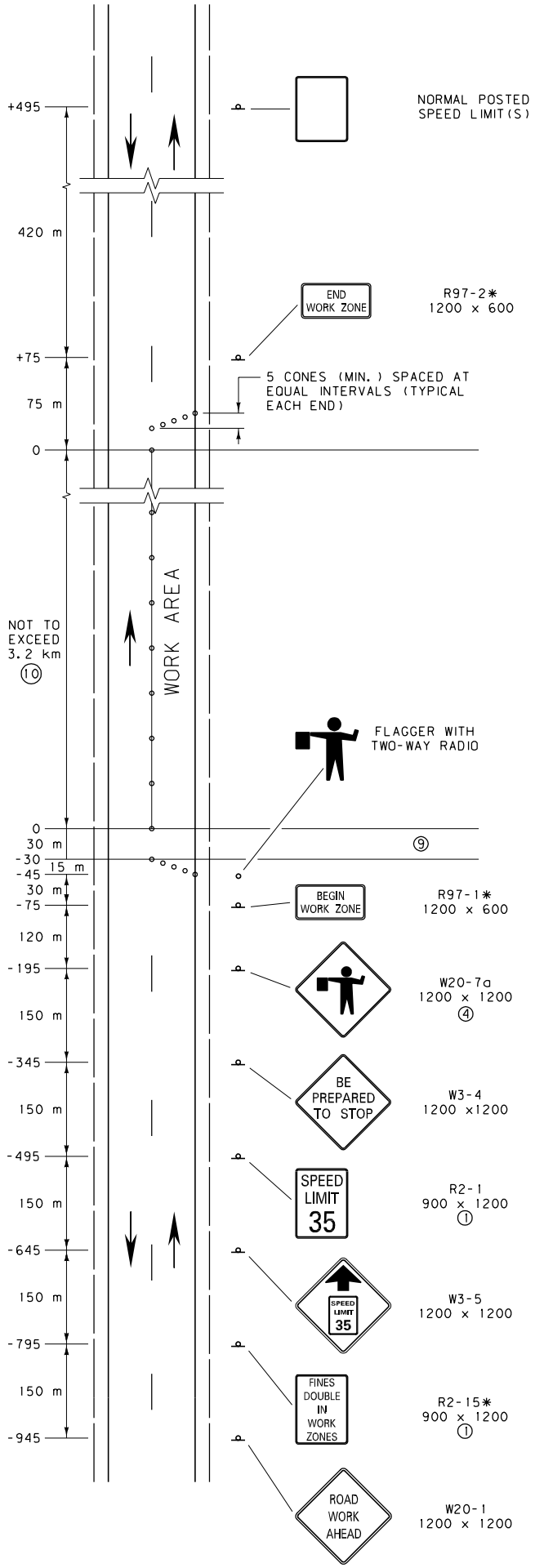

NOTES:

1. MINIMUM REGULATORY SIGN SIZE IS 600 mm x 750 mm ON TWO-LANE ROADS.
2. ON ROADWAYS WITH HIGH TRAFFIC VOLUMES OR VISIBILTY RESTRICTIONS, A 150 m SPACING FOR ALL SIGNS IS RECOMMENDED.
3. SPACE CHANNELIZING DEVICES AT INTERVALS IN METERS 0.6 TIMES THE SPEED LIMIT IN M.P.H. THROUGH THE BUFFER AND WORK AREA.
4. IF A NEED ARISES TO INCREASE VEHICLE STORAGE, ADD AN ADDITIONAL W20-7a "FLAGGER AHEAD" SIGN BETWEEN THE R2-1 AND THE ORIGINAL W20-7a AND/OR CONSIDER AN ADDITIONAL ADVANCE FLAGGER.
5. A MIRROR IMAGE OF THIS SIGN SEQUENCE IS REQUIRED FOR THE TRAFFIC FROM THE OPPOSITE DIRECTION.
6. FOR MORE INFORMATION OR CLARIFICATION CONTACT THE DISTRICT TRAFFIC ENGINEER. FOR EXAMPLE, IF WORK ZONE IS CLOSE TO A HORIZONTAL CURVE, A VERTICAL CURVE, A BRIDGE, INTERCHANGE, POOR SIGHT DISTANCE, OR OTHER SPECIAL CONDITION.
7. COVER ANY CONFLICTING SIGNS IN THE WORK ZONE.
8. SHORT-TERM WORK ZONE SIGNING IS NOT REQUIRED TO BE POST MOUNTED.
9. THE BUFFER SPACE CAN BE LATERAL AND LONGITUDINAL AND MAY BE INCREASED FOR DOWNGRADES AND OTHER CONDITIONS THAT AFFECT STOPPING DISTANCE.
10. TYPICALLY 3.2 KILOMETERS IS THE MAX. WORK AREA. HOWEVER, WHEN SIGHT DISTANCE, BUFFER ZONES OR ACCOMPLISHMENT RATES FOR EQUIPMENT ARE CONSIDERED, SOME MINOR ADJUSTMENTS TO THIS MAX. MAY BE CONSIDERED.

* DENOTES SIGNS THAT ARE UNIQUE TO MONTANA.

ALL DIMENSIONS ARE MILLIMETERS (mm) UNLESS OTHERWISE NOTED.

DETAILED DRAWING	
REFERENCE STANDARD SPEC. SECTION 618	DWG. NO. 618-M1
MAINTENANCE GUIDELINE FOR SHORT-TERM TWO-LANE CRACK SEALING WORK ZONE	
EFFECTIVE: FEBRUARY 2005	
serving you with pride	MONTANA DEPARTMENT OF TRANSPORTATION

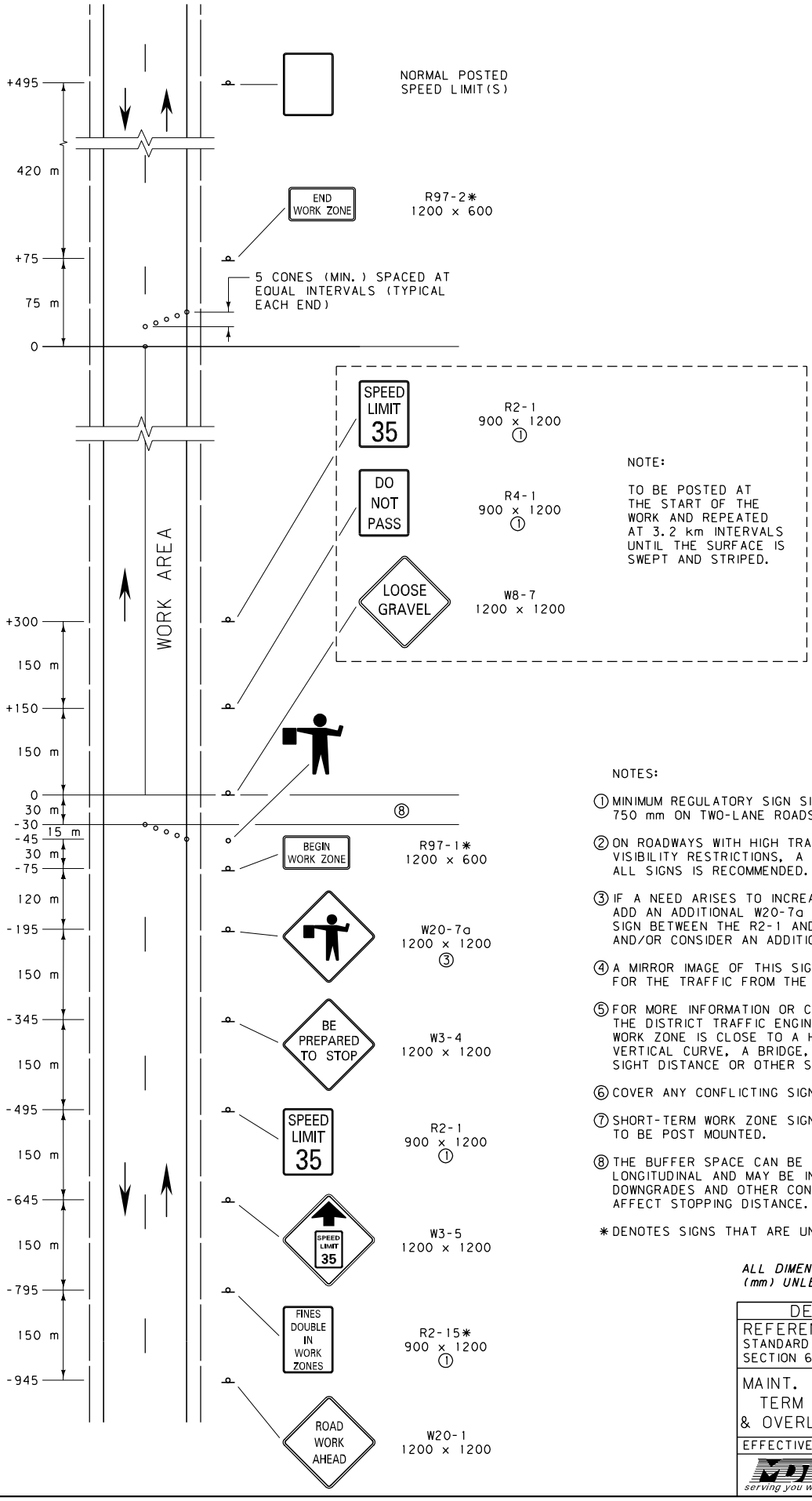

NOTES:

1. MINIMUM REGULATORY SIGN SIZE IS 600 mm x 750 mm ON TWO-LANE ROADS.
2. ON ROADWAYS WITH HIGH TRAFFIC VOLUMES OR VISIBILITY RESTRICTIONS, A 150 m SPACING FOR ALL SIGNS IS RECOMMENDED.
3. IF A NEED ARISES TO INCREASE VEHICLE STORAGE, ADD AN ADDITIONAL W20-7a "FLAGGER AHEAD" SIGN BETWEEN THE R2-1 AND THE ORIGINAL W20-7a AND/OR CONSIDER AN ADDITIONAL ADVANCE FLAGGER.
4. A MIRROR IMAGE OF THIS SIGN SEQUENCE IS REQUIRED FOR THE TRAFFIC FROM THE OPPOSITE DIRECTION.
5. FOR MORE INFORMATION OR CLARIFICATION CONTACT THE DISTRICT TRAFFIC ENGINEER. FOR EXAMPLE, IF WORK ZONE IS CLOSE TO A HORIZONTAL CURVE, A VERTICAL CURVE, A BRIDGE, INTERCHANGE, POOR SIGHT DISTANCE OR OTHER SPECIAL CONDITION.
6. COVER ANY CONFLICTING SIGNS IN THE WORK ZONE.
7. SHORT-TERM WORK ZONE SIGNING IS NOT REQUIRED TO BE POST MOUNTED.
8. THE BUFFER SPACE CAN BE LATERAL AND LONGITUDINAL AND MAY BE INCREASED FOR DOWNGRADES AND OTHER CONDITIONS THAT AFFECT STOPPING DISTANCE.

* DENOTES SIGNS THAT ARE UNIQUE TO MONTANA.

ALL DIMENSIONS ARE MILLIMETERS (mm) UNLESS OTHERWISE NOTED.

DETAILED DRAWING	
REFERENCE STANDARD SPEC. SECTION 618	DWG. NO. 618-M2
MAINT. GUIDELINE FOR SHORT-TERM TWO-LANE CHIP SEAL & OVERLAY (PILOTED TRAFFIC)	
EFFECTIVE: FEBRUARY 2005	
serving you with pride	MONTANA DEPARTMENT OF TRANSPORTATION

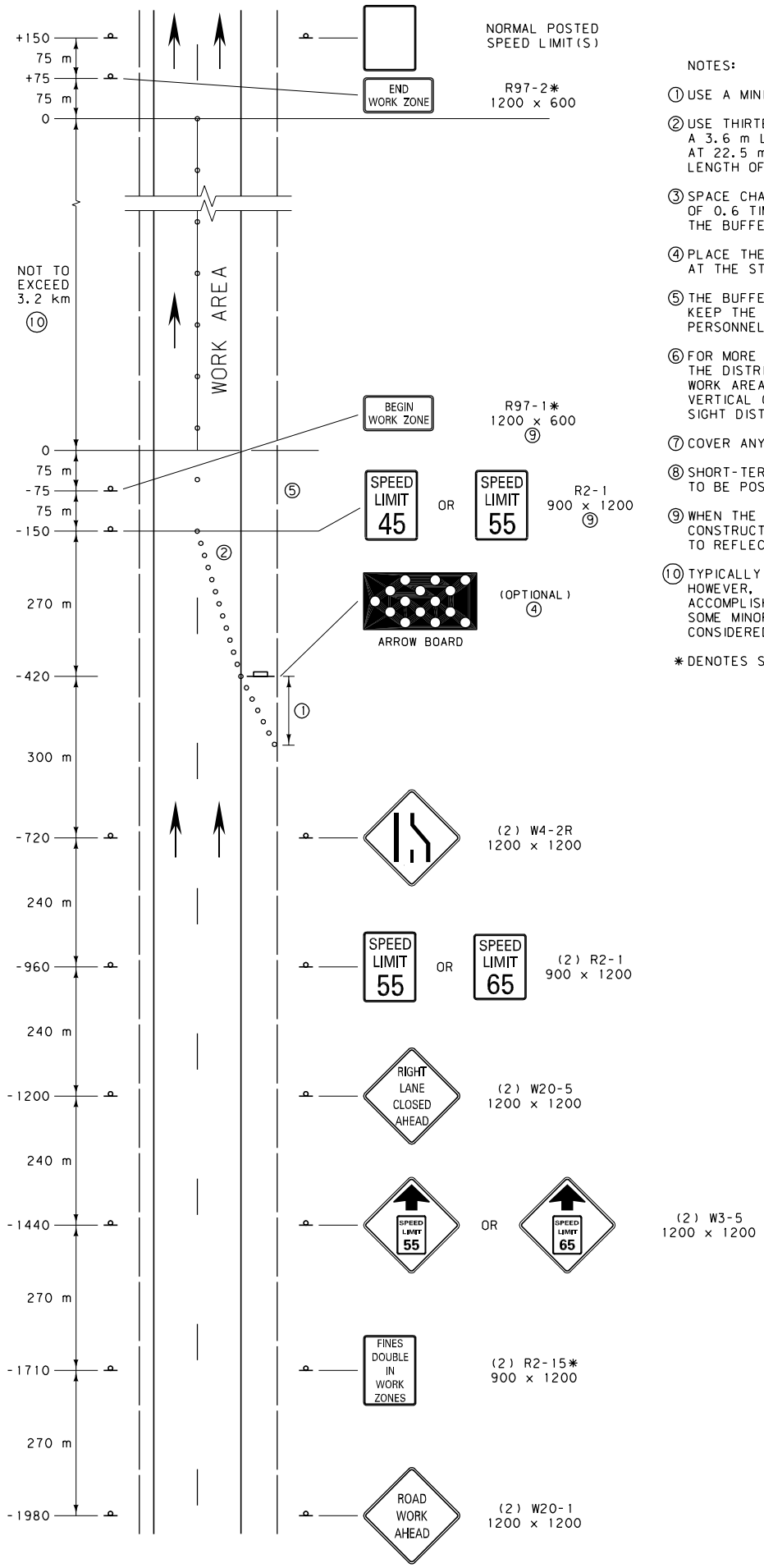

NOTES:

1. USE A MINIMUM 90 m SHOULDER TAPER.
2. USE THIRTEEN APPROVED CHANNELIZING DEVICES FOR A 3.6 m LANE CLOSURE TAPER (75 M.P.H. SPACED AT 22.5 m.) ASSURE THAT THE TAPER IS A MINIMUM LENGTH OF 270 m.
3. SPACE CHANNELIZING DEVICES AT INTERVALS IN METERS OF 0.6 TIMES THE SPEED LIMIT IN M.P.H. THROUGH THE BUFFER AND WORK AREA.
4. PLACE THE ARROW BOARD (IF USED) ON THE SHOULDER AT THE START OF THE TRAVEL LANE CLOSURE TAPER.
5. THE BUFFER SPACE CAN BE LATERAL AND LONGITUDINAL. KEEP THE BUFFER SPACE CLEAR OF EQUIPMENT AND PERSONNEL.
6. FOR MORE INFORMATION OR CLARIFICATION CONTACT THE DISTRICT TRAFFIC ENGINEER. FOR EXAMPLE, IF WORK AREA IS CLOSE TO A HORIZONTAL CURVE, A VERTICAL CURVE, A BRIDGE, INTERCHANGE, POOR SIGHT DISTANCE OR OTHER SPECIAL CONDITION.
7. COVER ANY CONFLICTING SIGNS IN THE WORK AREA.
8. SHORT-TERM WORK ZONE SIGNING IS NOT REQUIRED TO BE POST MOUNTED.
9. WHEN THE WORK ZONE CHANGES WITHIN THE CONSTRUCTION ZONE THESE SIGNS SHOULD BE MOVED TO REFLECT THE ACTUAL WORK ZONE.
10. TYPICALLY 3.2 KILOMETERS IS THE MAX. WORK AREA. HOWEVER, WHEN SIGHT DISTANCE, BUFFER ZONES OR ACCOMPLISHMENT RATES FOR EQUIPMENT ARE CONSIDERED, SOME MINOR ADJUSTMENTS TO THIS MAX. MAY BE CONSIDERED.

* DENOTES SIGNS THAT ARE UNIQUE TO MONTANA.

ALL DIMENSIONS ARE MILLIMETERS (mm) UNLESS OTHERWISE NOTED.

DETAILED DRAWING	
REFERENCE STANDARD SPEC. SECTION 618	DWG. NO. 618-M3
MAINTENANCE GUIDELINE FOR SHORT-TERM LANE CLOSURE ON INTERSTATE	
EFFECTIVE: FEBRUARY 2005	
serving you with pride	MONTANA DEPARTMENT OF TRANSPORTATION

RURAL ①

RURAL WITH GUARDRAIL ②

URBAN ③

REGULATORY
R1-1 / R1-2

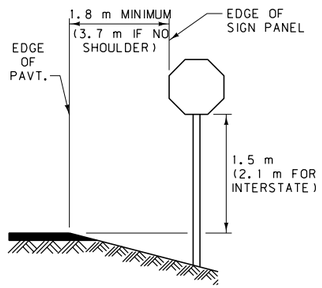

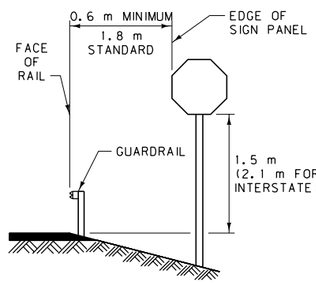

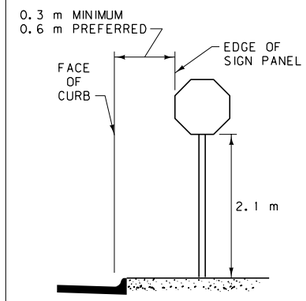

REGULATORY
EXCEPT R1-1 / R1-2

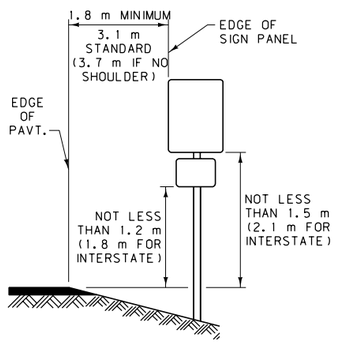

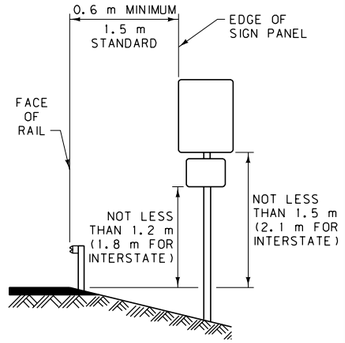

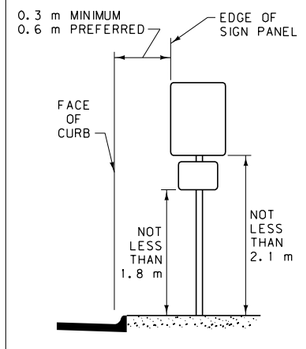

WARNING

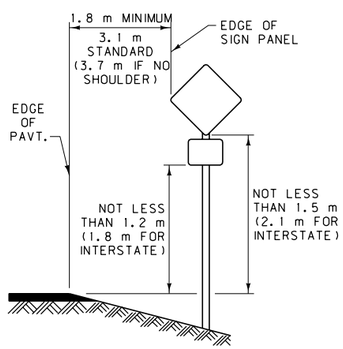

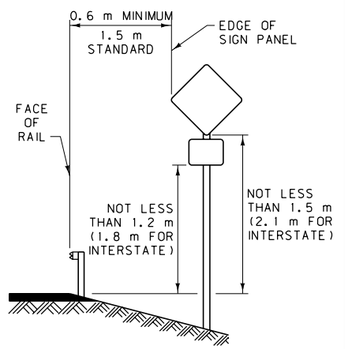

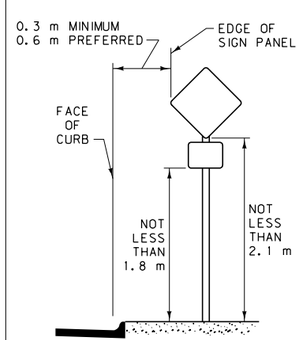

ROUTE MARKERS

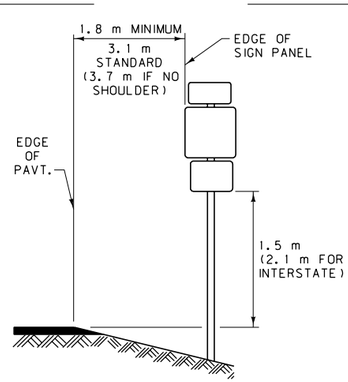

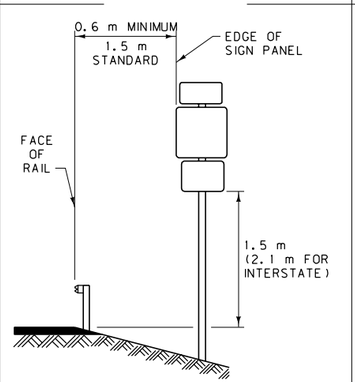

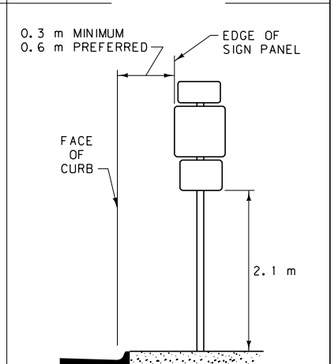

GUIDE SIGNS

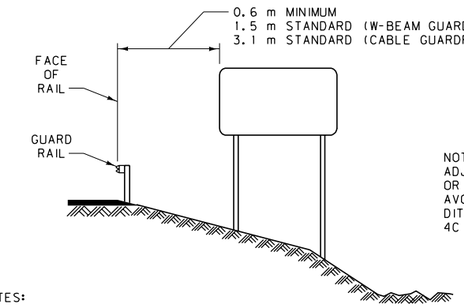

NOTE:
ADJUST SIGN LOCATION OR CLEARANCE SLIGHTLY TO AVOID PLACING POSTS IN DITCH BOTTOMS. SEE NOTE 4C BELOW.

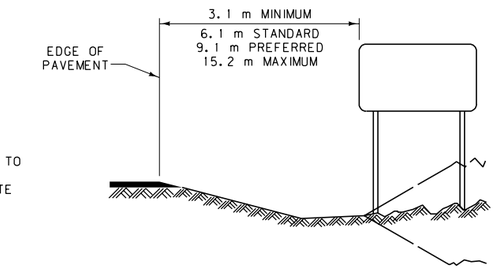

NOTES:

1. PLACE ALL SIGNS AT THE CLEARANCE AND MOUNTING HEIGHTS SHOWN.
2. FOR REGULATORY, WARNING AND ROUTE MARKER SIGNS, AND THEIR ASSEMBLIES, ON HIGHWAYS OTHER THAN INTERSTATE:
   A) USE DIAGRAMS LOCATED IN COLUMN ① WHEN PLACING THESE SIGNS IN STANDARD RURAL CONDITIONS. USE COLUMN ② WHEN PLACING THESE SIGNS BEHIND GUARDRAIL IN RURAL CONDITIONS. USE COLUMN ③ WHEN PLACING THESE SIGNS IN URBAN CONDITIONS WHERE THERE IS ADEQUATE CLEARANCE AND SIDEWALK WIDTH.
   B) WHERE SIDEWALK WIDTH IS LIMITED IN URBAN CONDITIONS, SEE DTL. DWG. NO. 619-18 FOR PLACEMENT DETAILS.
3. FOR REGULATORY (ALL OTHER), WARNING AND ROUTE MARKER SIGNS, AND THEIR ASSEMBLIES, ON INTERSTATE HIGHWAYS: THE CLEARANCE IS 6.1 m FROM THE EDGE OF PAVEMENT IN COLUMN ① FOR STANDARD RURAL CONDITIONS. THE CLEARANCES LISTED IN COLUMNS ② AND ③ REMAIN AS SHOWN.
4. FOR GUIDE SIGNS AND THEIR ASSEMBLIES:
   A) USE THE DIAGRAMS LOCATED ABOVE WHEN PLACING THESE SIGNS IN THE GIVEN RURAL CONDITIONS.
   B) FOR PLACEMENT OF THESE SIGNS IN URBAN CONDITIONS, SEE THE SIGN LOCATION AND SPECIFICATION SHEETS IN THE SIGNING PLANS FOR EACH INDIVIDUAL SIGN.
   C) THE MAXIMUM CLEARANCE OF THESE SIGNS IS 15.2 m IN ANY CONDITION.
   D) SEE DTL. DWG. NO. 619-08 FOR MOUNTING HEIGHTS.
5. WITHIN THE CITY LIMITS OR IN A SIDEWALK AND CURB AREA, MOUNT SIGNS TO HAVE THE PROPER CLEARANCES, BUT AVOID ANY CONFLICT BETWEEN THE POST AND THE MAIN WALKING AREA OF THE SIDEWALK, OR WITH DOORWAYS OR WINDOWS OF ADJACENT BUILDINGS. THE EXACT LOCATION OF THESE SIGN INSTALLATIONS WILL BE DETERMINED BY THE ENGINEER. SEE DTL. DWG. NO. 619-18 FOR VARIOUS CANTILEVER TYPE MOUNTINGS.
6. EVALUATE SIGNS WITHIN CLEAR ZONES (TABLES BELOW) FOR SUPPORT BREAKAWAY REQUIREMENTS (CONTACT MDT TRAFFIC SECTION FOR CRITERIA).

CLEAR ZONE DISTANCES
(IN METERS FROM EDGE OF DRIVING LANE)

DESIGN SPEED	DESIGN ADT	FILL SLOPES			CUT SLOPES		
		6:1 OR FLATTER	5:1 TO 4:1	3:1	3:1	4:1 TO 5:1	6:1 OR FLATTER
60 km/h OR LESS	UNDER 750	2.0-3.0	2.0-3.0	**	2.0-3.0	2.0-3.0	2.0-3.0
	750-1499	3.0-3.5	3.5-4.5	**	3.0-3.5	3.0-3.5	3.0-3.5
	1500-6000	3.5-4.5	4.5-5.0	**	3.5-4.5	3.5-4.5	3.5-4.5
	OVER 6000	4.5-5.0	5.0-5.5	**	4.5-5.0	4.5-5.0	4.5-5.0
70-80 km/h	UNDER 750	3.0-3.5	3.5-4.5	**	2.5-3.0	2.5-3.0	3.0-3.5
	750-1499	4.5-5.0	5.0-6.0	**	3.0-3.5	3.5-4.5	4.5-5.0
	1500-6000	5.0-5.5	6.0-8.0	**	3.5-4.5	4.5-5.0	5.0-5.5
	OVER 6000	6.0-6.5	7.5-8.5	**	4.5-5.0	5.5-6.0	6.0-6.5
90 km/h	UNDER 750	3.5-4.5	4.5-5.5	**	2.5-3.0	3.0-3.5	3.0-3.5
	750-1499	5.0-5.5	6.0-7.5	**	3.0-3.5	4.5-5.0	5.0-5.5
	1500-6000	6.0-6.5	7.5-9.0	**	4.5-5.0	5.0-5.5	6.0-6.5
	OVER 6000	6.5-7.5	8.0-10.0 *	**	5.0-5.5	6.0-6.5	6.5-7.5
100 km/h	UNDER 750	5.0-5.5	6.0-7.5	**	3.0-3.5	3.5-4.5	4.5-5.0
	750-1499	6.0-7.5	8.0-10.0 *	**	3.5-4.5	5.0-5.5	6.0-6.5
	1500-6000	8.0-9.0	10.0-12.0 *	**	4.5-5.5	5.5-6.5	7.5-8.0
	OVER 6000	9.0-10.0 *	11.0-13.5 *	**	6.0-6.5	7.5-8.0	8.0-8.5
110 km/h	UNDER 750	5.5-6.0	6.0-8.0	**	3.0-3.5	4.5-5.0	4.5-4.9
	750-1499	7.5-8.0	8.5-11.0 *	**	3.5-5.0	5.5-6.0	6.0-6.5
	1500-6000	8.5-10.0 *	10.5-13.0 *	**	5.0-6.0	6.5-7.5	8.0-8.5
	OVER 6000	9.0-10.5 *	11.5-14.0 *	**	6.5-7.5	8.0-9.0	8.5-9.0

* WHEN AN INVESTIGATION OR ACCIDENT HISTORY INDICATES A HIGH PROBABILITY OF ACCIDENTS, CLEAR ZONE DISTANCES GREATER THAN 9 m MAY BE PROVIDED AS INDICATED. CLEAR ZONES MAY ALSO BE LIMITED TO 9 m TO PROVIDE A CONSISTENT ROADWAY TEMPLATE WHEN EXPERIENCE WITH PREVIOUS SIMILAR PROJECTS INDICATES SATISFACTORY PERFORMANCE.

** FIXED OBJECTS, INCLUDING SIGN POSTS, SHOULD NOT BE ALLOWED IN THE VICINITY OF THE TOE OF THESE SLOPES. SEE AASHTO ROADSIDE DESIGN GUIDE FOR ADDITIONAL CONSIDERATIONS IN LOCATING SIGNS.

HORIZONTAL CURVE ADJUSTMENTS
(APPLICALBLE ON OUTSIDE OF CURVE ONLY)

RADIUS (m)	DESIGN SPEED (km/h)					
	60	70	80	90	100	110
900	1.1	1.1	1.1	1.2	1.2	1.2
700	1.1	1.1	1.2	1.2	1.2	1.3
600	1.1	1.2	1.2	1.2	1.3	1.4
500	1.1	1.2	1.2	1.3	1.3	1.4
450	1.2	1.2	1.3	1.3	1.4	1.5
400	1.2	1.2	1.3	1.3	1.4	
350	1.2	1.2	1.3	1.4	1.5	
300	1.2	1.3	1.4	1.5	1.5	
250	1.3	1.3	1.4	1.5		
200	1.3	1.4	1.5			
150	1.4	1.5				
100	1.5					

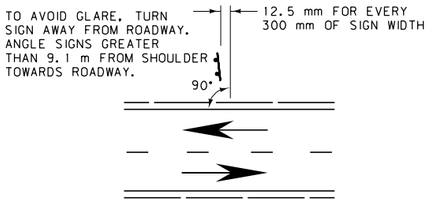

SKEW DIAGRAM

ALL DIMENSIONS ARE MILLIMETERS (mm) UNLESS OTHERWISE NOTED.

DETAILED DRAWING

REFERENCE STANDARD SPEC. SECTION 619

DWG. NO. 619-00

SIGN CLEARANCES AND MOUNTING HEIGHTS

EFFECTIVE: FEBRUARY 2005

MDT serving you with pride — MONTANA DEPARTMENT OF TRANSPORTATION

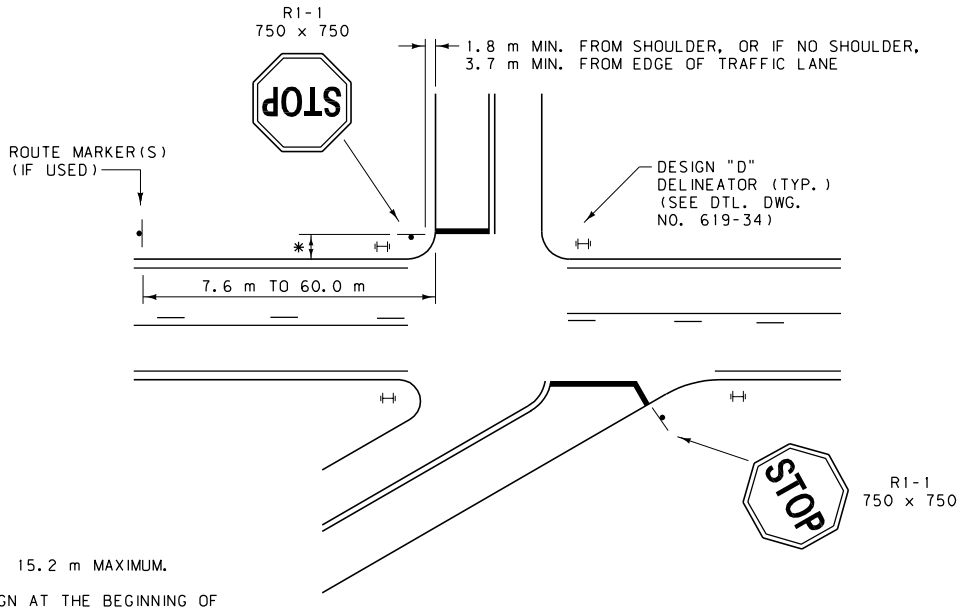

NOTES:

* 1.8 m MINIMUM; 15.2 m MAXIMUM.

PLACE R1-1 SIGN AT THE BEGINNING OF CURB RADIUS OR SHOULDER RADIUS, OR 1.2 m MIN. IN ADVANCE OF THE MARKED OR UNMARKED CROSSWALK.

SEE PLANS FOR FINAL SIGNING AND PAVEMENT MARKING LOCATIONS.

RURAL

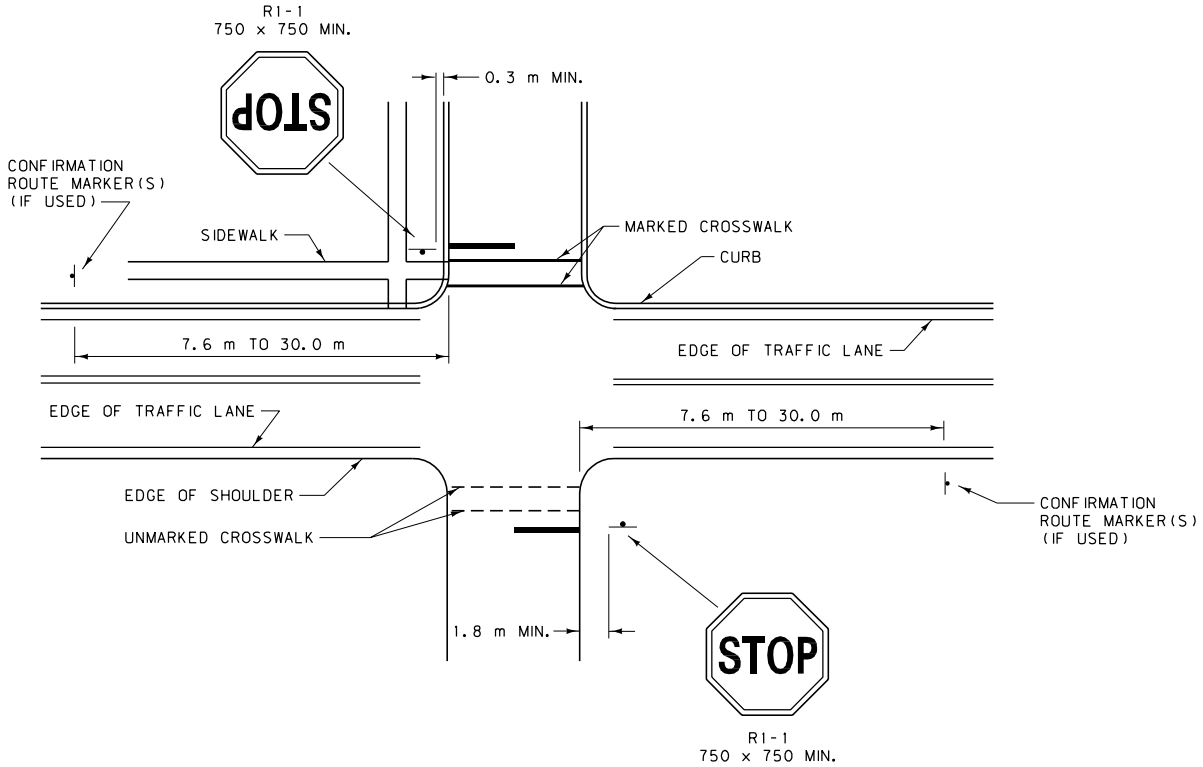

URBAN

ALL DIMENSIONS ARE MILLIMETERS (mm) UNLESS OTHERWISE NOTED.

DETAILED DRAWING	
REFERENCE STANDARD SPEC. SECTION 619	DWG. NO. 619-02
TYPICAL RURAL AND URBAN APPROACHES	
EFFECTIVE: FEBRUARY 2005	
serving you with pride	MONTANA DEPARTMENT OF TRANSPORTATION

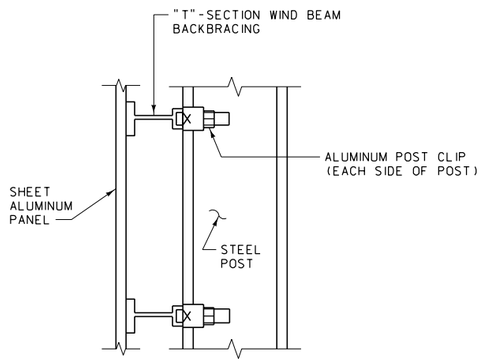

BACKBRACE DETAIL

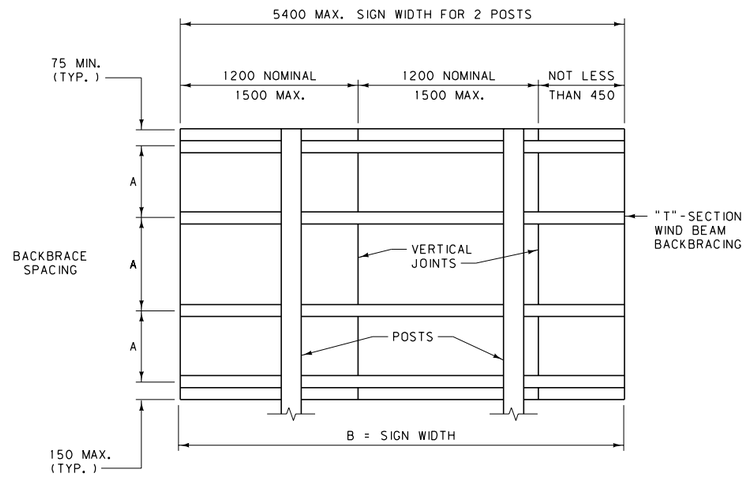

BACKBRACING TABLE - ALUMINUM SIGNS		
MAXIMUM BACKBRACE SPACING "A"	MAXIMUM WIDTH "B"	
	2 POST	3 POST
500	5400	8100
550	5100	7700
600	4950	7400
750	4425	6600
900	4050	6000
1050	3750	5550

FOR ALUMINUM PLATE THICKNESS INFORMATION SEE SECTION 704.01 OF THE STANDARD SPECIFICATIONS.

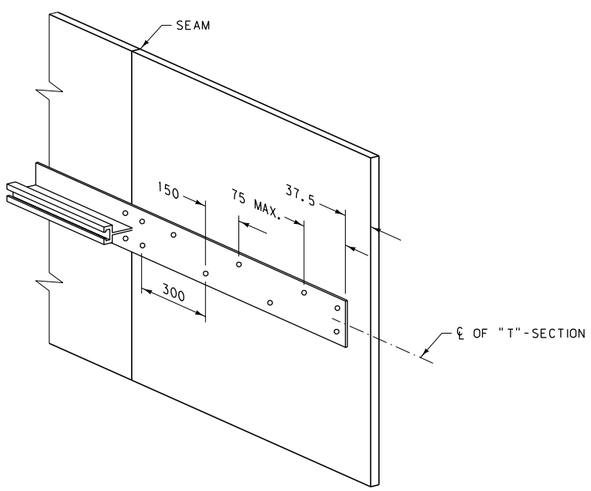

RIVET SPACING DETAIL

LOCATE RIVETS AT 150 mm ALTERNATE CENTERS ON HORIZONTAL EXTRUDED "T"-SECTION.

DOUBLE RIVETS (TOP AND BOTTOM OR LEFT AND RIGHT OF EXTRUDED "T"-SECTION) AT HORIZONTAL AND VERTICAL JOINTS IN SHEET ALUMINUM FACE AND AT ENDS OF EXTRUDED "T"-SECTION.

COLOR RIVET HEADS TO MATCH ADJACENT SHEETING.

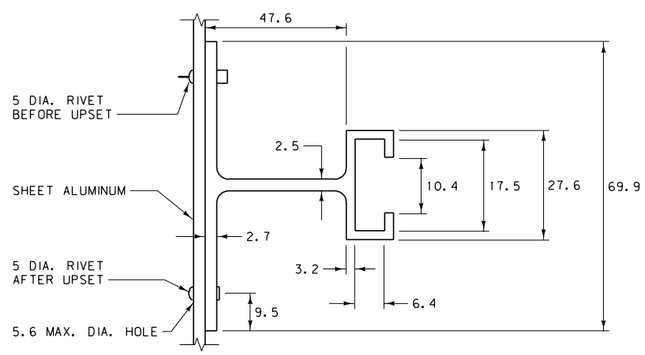

EXTRUDED "T"-SECTION BACKBRACE

NOTES:

CONFORM ALL ALUMINUM SIGNS TO SECTIONS 619, 704.01.1 AND 704.01.2 OF THE STANDARD SPECIFICATIONS.

FOR SIGNS 1200 mm HIGH BY 1800 mm LONG OR LESS USE A SINGLE SHEET OF ALUMINUM.

DO NOT USE HORIZONTAL JOINTS ON SIGNS 1800 mm IN HEIGHT AND SMALLER. THE MINIMUM SHEET WIDTH IS 450 mm.

SIGNS OVER 1800 mm HIGH MAY HAVE HORIZONTAL AND VERTICAL JOINTS. THE MINIMUM SHEET SIZE IS 450 mm WIDE BY 450 mm HIGH.

CLEAN AND DRY POST CLIP NUTS, THEN TORQUE TO 25.4 N·m.

LOCATE ALL HORIZONTAL JOINTS AT A "T"-SECTION.

NO SPLICES ARE ALLOWED IN EXTRUDED "T"-SECTIONS.

USE SCREWS, BOLTS AND LOCKWASHERS THAT ARE ALUMINUM ALLOY MEETING ASTM B 211M FOR ALLOY 2024-T4, STAINLESS STEEL, OR CADMIUM PLATED STEEL MEETING ASTM B 766.

USE ONLY ALUMINUM RIVETS.

THE MAXIMUM GAP BETWEEN INDIVIDUAL SIGN PANELS AT JOINTS IS 1.6 mm AT ANY POINT.

THE ENGINEER MAY APPROVE ADDITIONAL METHODS TO PREVENT LIGHT LEAKAGE THROUGH SIGN PANEL SEAMS.

ALL DIMENSIONS ARE MILLIMETERS (mm) UNLESS OTHERWISE NOTED.

DETAILED DRAWING	
REFERENCE STANDARD SPEC. SECTION 619, 704	DWG. NO. 619-04
ALUMINUM SHEET INCREMENT SIGN CONSTRUCTION DETAILS	
EFFECTIVE: FEBRUARY 2005	
serving you with pride	MONTANA DEPARTMENT OF TRANSPORTATION

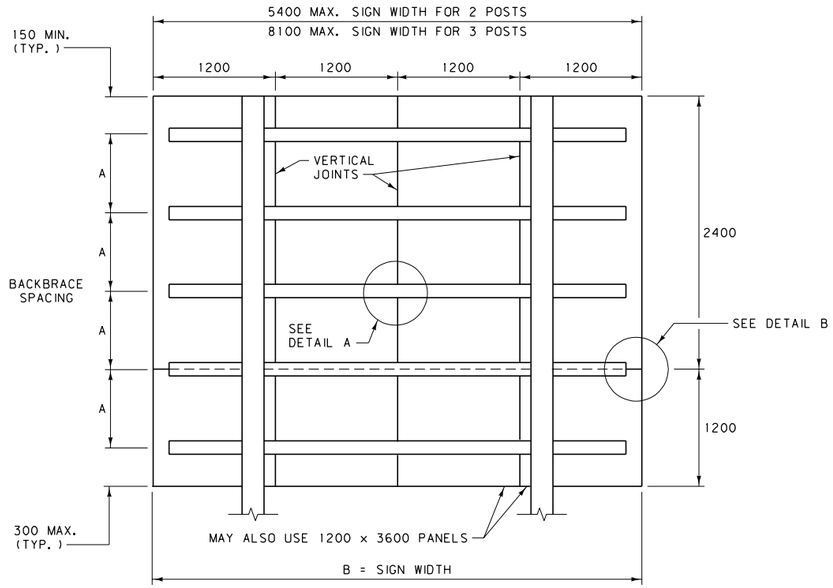

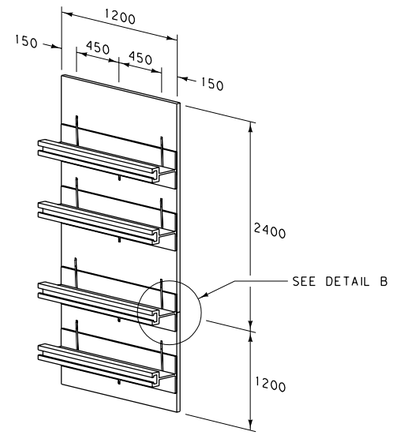

ALUMINUM CLIP PLACEMENT

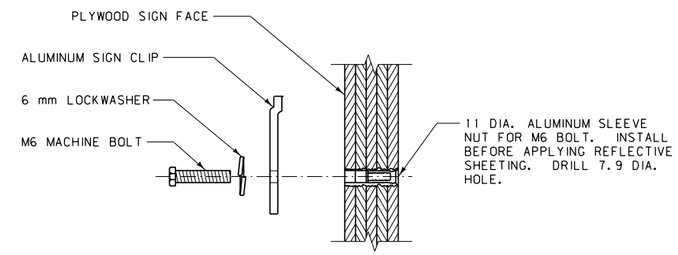

CLIP DETAIL

BACKBRACING TABLE - PLYWOOD SIGNS		
MAXIMUM BACKBRACE SPACING "A"	MAXIMUM WIDTH "B"	
	2 POST	3 POST
500	5400	8100
550	5100	7700
600	4950	7400
750	4425	6600
900	4050	6000
1050	3750	5550

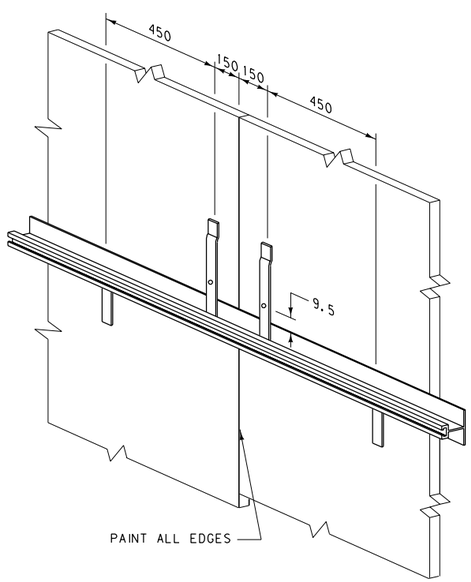

DETAIL A
VERTICAL JOINT

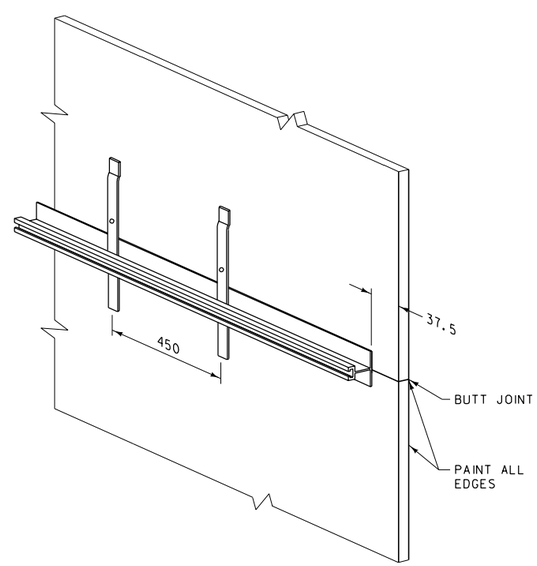

DETAIL B
HORIZONTAL JOINT

NOTES:

CONFORM ALL PLYWOOD SIGNS TO SECTIONS 619, 704.01.3 AND 704.02.2 OF THE STANDARD SPECIFICATIONS.

ON SIGNS 1200 mm HIGH AND GREATER, DO NOT USE ANY PANELS LESS THAN 1200 mm IN HEIGHT.

DO NOT USE HORIZONTAL JOINTS ON SIGNS LESS THAN 1200 mm IN HEIGHT.

FOR SIGNS WITH WIDTHS THAT ARE NOT IN MULTIPLES OF 1200 mm, PLACE THE ODD LENGTH PANEL ON THE INSIDE EDGE.

FOR SIGNS OVER 3000 mm IN HEIGHT, THE FULL HEIGHT MAY BE OBTAINED WITH PANELS HAVING A FACTORY SCARFED JOINT IN LIEU OF USING STANDARD LENGTH PANEL AS SHOWN.

THE MINIMUM SIZE PANEL IS 450 mm WIDE BY 1200 mm HIGH.

CONSTRUCT PLYWOOD SIGNS OF ONE PIECE OF PLYWOOD UNLESS THE PLANS SPECIFY OTHERWISE FOR SPECIAL DESIGN SIGNS.

ALL DIMENSIONS ARE MILLIMETERS (mm) UNLESS OTHERWISE NOTED.

DETAILED DRAWING	
REFERENCE STANDARD SPEC. SECTION 619.704	DWG. NO. 619-06
PLYWOOD SHEET INCREMENT GUIDE SIGN CONSTRUCTION DETAILS	
EFFECTIVE: FEBRUARY 2005	
serving you with pride	MONTANA DEPARTMENT OF TRANSPORTATION

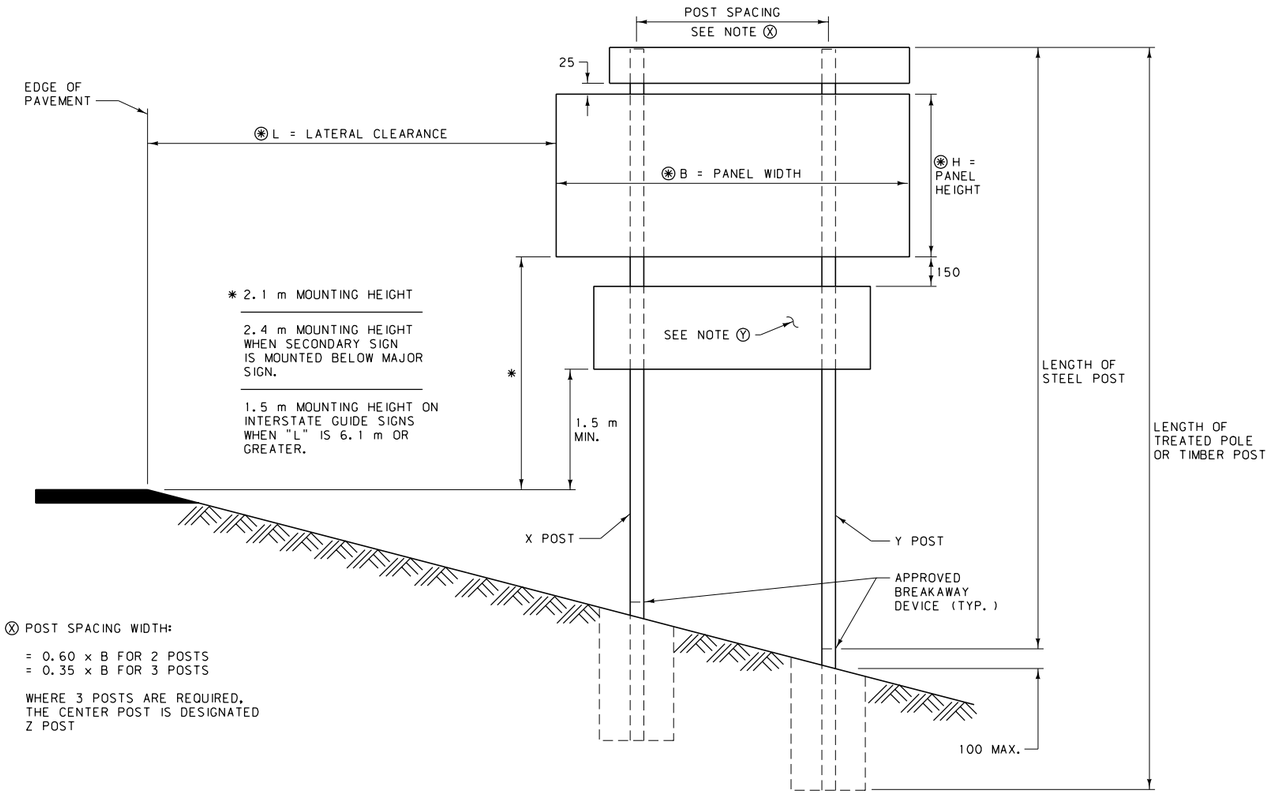

Ⓧ POST SPACING WIDTH:

= 0.60 x B FOR 2 POSTS
= 0.35 x B FOR 3 POSTS

WHERE 3 POSTS ARE REQUIRED, THE CENTER POST IS DESIGNATED Z POST

MOUNTING DETAILS

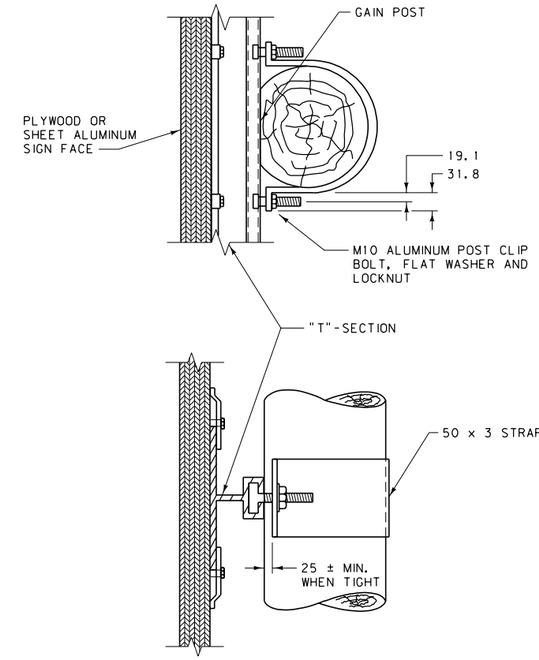

TREATED POLE

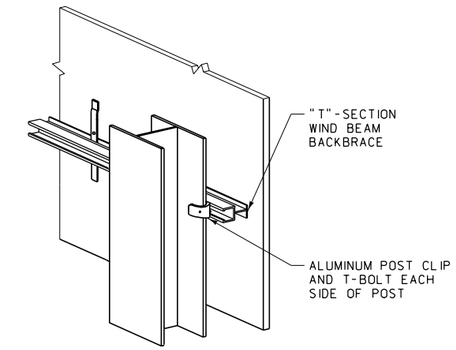

STEEL POST

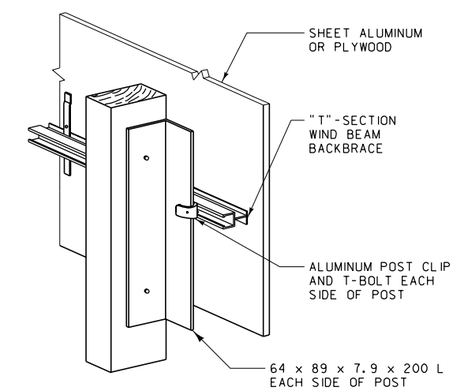

TREATED TIMBER POST

NOTES:

MOUNTING SYSTEMS SHOWN ARE TYPICAL. OTHER SYSTEMS MAY BE APPROVED BY THE ENGINEER.

ALL STEEL HARDWARE MUST BE GALVANIZED, STAINLESS, OR CADMIUM PLATED.

GAIN THE TOP HALF OF WOOD POLES ACCORDING TO THE TABLE ON DTL. DWG. NO. 619-20.

SEE THE SIGNING QUANTITIES FOR THE TYPES OF POSTS AND FOUNDATIONS.

MOUNT ONE-PANEL PLYWOOD SIGNS DIRECTLY TO WOOD POLES OR POSTS, WHEN SPECIFIED IN THE PLANS, BY BOLTING THROUGH THE SIGN PLATE AND THE POLE WITH CADMIUM PLATED BOLTS AS REQUIRED BY THE DETAILED DRAWINGS, SPECIFICATIONS AND DESIGN. USE "T"-SECTION WIND BEAMS WHEN REQUIRED BY DTL. DWG. NO. 619-06.

Ⓨ SUSPEND LARGE SUPPLEMENTAL SIGNS, ADDED AFTER INITIAL SIGN INSTALLATION, FROM MAJOR SIGN PANEL OR BACKBRACING. ATTACHMENT TO MULTIPLE POSTS/POLES IS NOT ALLOWED.

USE POST SPACING, POST SIZE AND BREAKAWAY DEVICES SPECIFIED IN THE PLANS AND IN THE SPECIFICATIONS. FOR INFORMATION REGARDING APPROPRIATE BREAKAWAY DEVICES FOR NEW INSTALLATIONS NOT SUPPORTED BY THE PLANS, CONTACT THE TRAFFIC UNIT.

IN LOCATING SIGNS, AVOID PLACING POSTS IN DITCH BOTTOMS WHERE THEY WOULD IMPEDE DRAINAGE.

⊛ DIMENSIONS ARE SPECIFIED IN THE SIGNING PLANS.

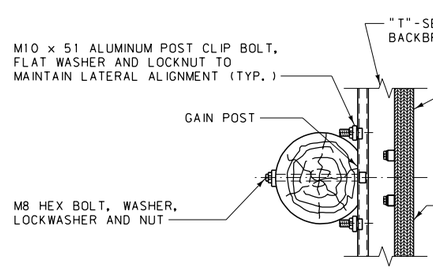

DOUBLE POLE MOUNT

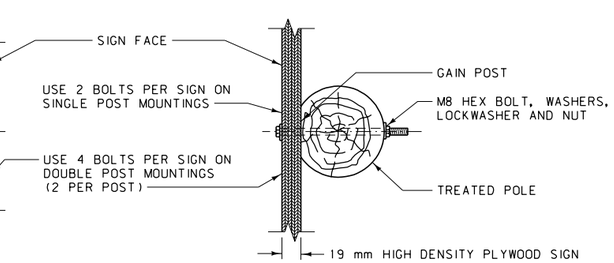

TREATED POLE
SINGLE OR DOUBLE
(USED WHEN "T"-BAR WIND BEAMS NOT REQUIRED)

ALL DIMENSIONS ARE MILLIMETERS (mm) UNLESS OTHERWISE NOTED.

DETAILED DRAWING	
REFERENCE STANDARD SPEC. SECTION 619.704	DWG. NO. 619-08
GUIDE SIGN CLEARANCE AND MOUNTING DETAILS	
EFFECTIVE: FEBRUARY 2005	
serving you with pride	MONTANA DEPARTMENT OF TRANSPORTATION

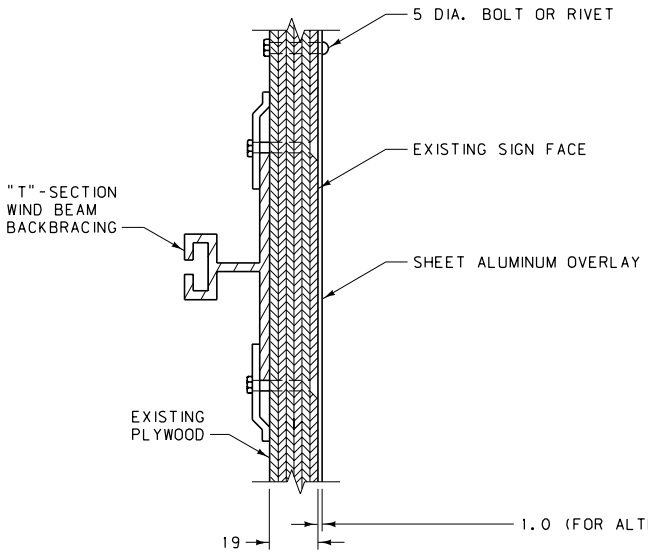

EXISTING PLYWOOD SIGNS

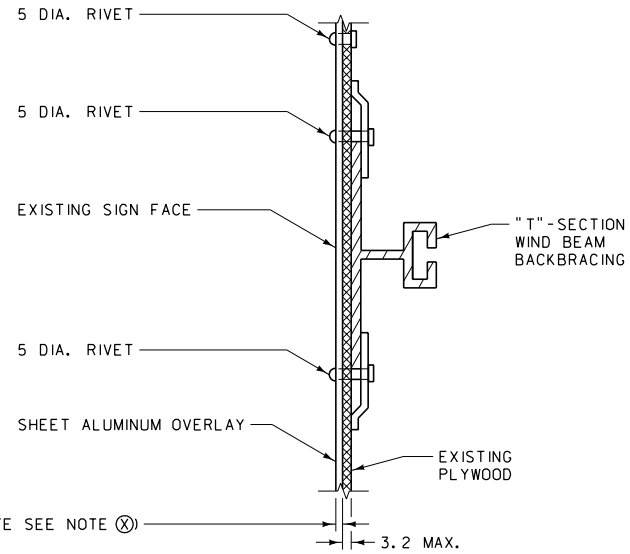

EXISTING ALUMINUM SIGNS

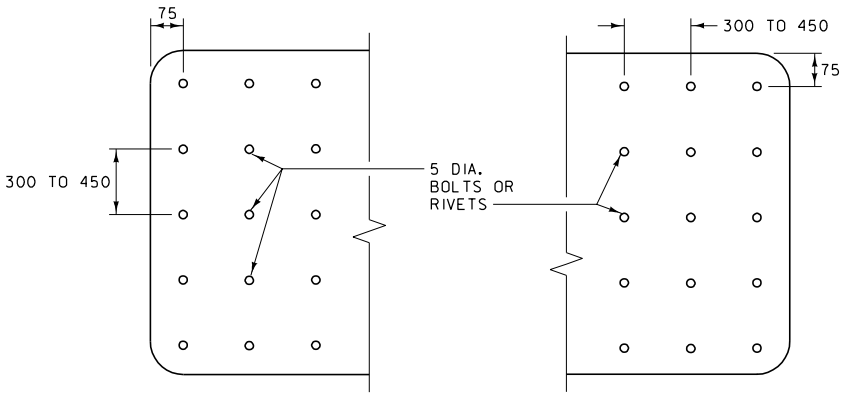

FASTENER PATTERN

NOTES:

REMOVE ALL RAISED LETTERS, NUMERALS, SYMBOLS, BORDERS AND PREVIOUS SIGN OVERLAYS TO BE REPLACED, AND CLEAN SIGN FACE TO A SMOOTH SURFACE BEFORE OVERLAYING.

ALL LETTERS, NUMERALS, SYMBOLS AND BORDERS ARE TYPE "C" CUTOUT UNLESS OTHERWISE SPECIFIED, AND APPLIED TO THE BACK-GROUND SHEETING PRIOR TO FIELD APPLICATION OF THE SIGN.

THE SIZE OF ALL GUIDE SIGN OVERLAYS AND LEGENDS MUST BE VERIFIED BY THE ENGINEER PRIOR TO FABRICATION.

Ⓧ AN ADHESIVE-BACKED SHEETING MAY BE USED AS AN ALTERNATIVE ON SIGN WIDTHS OF 1800 mm OR LESS IF IT IS PREFABRICATED TO A MINIMUM THICKNESS OF 0.13 mm AND CONSTRUCTED OF PREAPPLIED REFLECTIVE SHEETING ON ADHESIVE-BACKED ALUMINUM. APPLY ADHESIVE-BACKED OVERLAY SHEETING WHEN AIR AND SURFACE TEMPERATURES ARE ABOVE 10°C. DO NOT USE THIS TYPE OF OVERLAY MATERIAL ON OVERHEAD SIGNS.

PROVIDE A MINIMUM REFLECTIVE SHEETING INTENSITY OF ENGINEERING GRADE, MEETING THE REQUIREMENTS OF THE STANDARD SPECIFICATIONS, UNLESS SPECIFIED OTHERWISE.

APPLY ALL MATERIALS IN ACCORDANCE WITH THE MANUFACTURER'S SPECIFICATIONS AND RECOMMENDATIONS.

SEE THE STANDARD SPECIFICATIONS FOR ADDITIONAL REQUIREMENTS.

USE ALUMINUM ALLOY TYPE 6061-T6 OR AA5052-H38. CONVERSION COAT ALL ALUMINUM WITH A PROCESS SUCH AS ALODINE 1200 (OR EQUAL), AND RINSE AND DRY THOROUGHLY. PROTECT IT FROM SOIL BY ACCEPTABLE METHODS.

SIGN OVERLAYS MAY REQUIRE REMOVAL OF THE SIGN FROM THE POSTS TO AVOID PROJECTING BOLT HEADS. DO NOT LEAVE WARNING AND REGULATORY SIGNS TO BE OVERLAYED UNDISPLAYED FOR MORE THAN ONE (1) HOUR DURING DAYLIGHT. DO NOT LEAVE GUIDE SIGNS UNDISPLAYED FOR MORE THAN TEN (10) HOURS DURING DAYLIGHT. INSURE SIGNS TO BE OVERLAYED ARE OPERATIONAL PRIOR TO DARKNESS.

OVERLAY SIGNS SMALLER THAN 1200 mm x 1800 mm WITH ONE PANEL OF MATERIAL. FOR SEAMS IN LARGE OVERLAYS, USE RIVETS OR BOLTS SPACED AS SHOWN ON THIS DRAWING AND PLACE PARALLEL TO AND NO MORE THAN 75 mm LATERALLY FROM THE SEAM.

ALL DIMENSIONS ARE MILLIMETERS (mm) UNLESS OTHERWISE NOTED.

DETAILED DRAWING	
REFERENCE STANDARD SPEC. SECTION 619	DWG. NO. 619-10
SHEET ALUMINUM OVERLAY	
EFFECTIVE: FEBRUARY 2005	
serving you with pride	MONTANA DEPARTMENT OF TRANSPORTATION

NOTES:

USE TUBULAR POSTS FOR SINGLE POST MOUNTED SIGNS ONLY.

BOLT WITH HEX HEAD, HEX NUT AND 3 WASHERS EACH LOCATION. SEE TABLE FOR BOLT DIAMTER AND TORQUE. SEE PROCEDURE FOR BASE CONNECTION ASSEMBLY.

ALL BOLTS ARE ASTM A 325M.

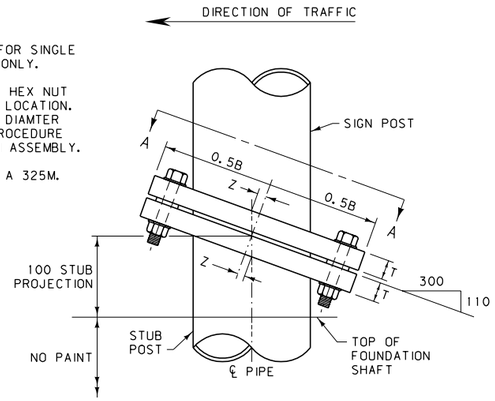

SIGN POST AND STUB POST DETAILS

SECTIONS SHOWN ARE FOR INSTALLATION ON RIGHT SHOULDER AND IN GORE. PLATE SLOT BEVELS ARE OPPOSITE HAND FROM THAT SHOWN FOR INSTALLATIONS ON LEFT SHOULDER.

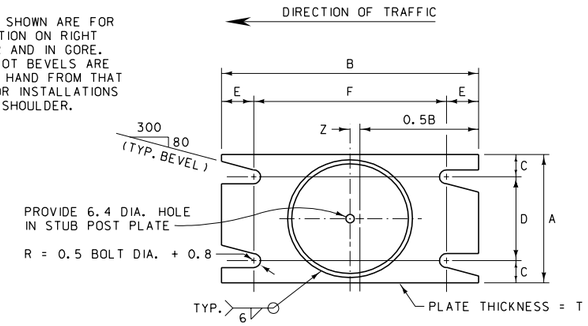

SECTION A-A

BASE PLATE DETAIL

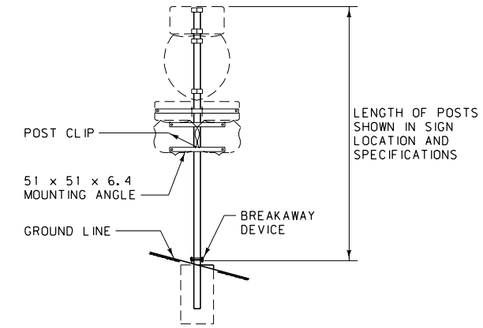

TYPICAL SIGN ELEVATION

FOR DETAILS OF MOUNTING ANGLES SEE DETAILED DRAWING NUMBER 619-16 AND BELOW.

PROCEDURE FOR BASE CONNECTION ASSEMBLY

1. ASSEMBLE POST TO STUB WITH BOLTS AND ONE FLAT WASHER BETWEEN PLATES.
2. SHIM AS REQUIRED TO PLUMB POST.
3. TIGHTEN BOLTS IN A SYSTEMATIC ORDER TO THE PRESCRIBED TORQUE (SEE TABLE BELOW).
4. LOOSEN EACH BOLT AND RETIGHTEN TO PRESCRIBED TORQUE IN THE SAME ORDER AS ORIGINAL TIGHTENING. DO NOT OVERTIGHTEN.
5. BURR THREADS AT JUNCTION WITH NUT USING A CENTER PUNCH TO PREVENT NUT LOOSENING.

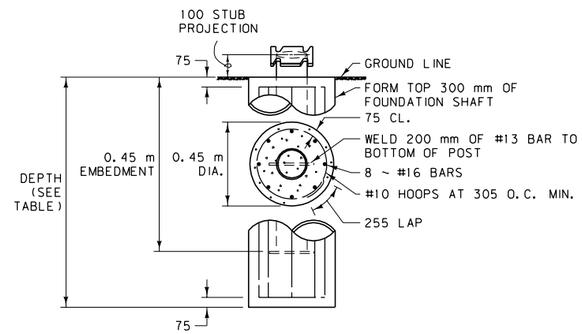

FOUNDATION SHAFT DETAIL

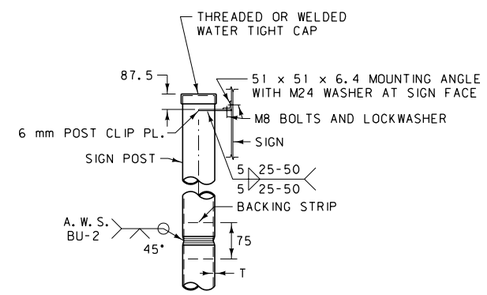

TYPICAL SPLICE

BACKING STRIP THICKNESS = T OR 8 mm MAX. LOCATE SPLICE IN TOP ONE-HALF OF POST.

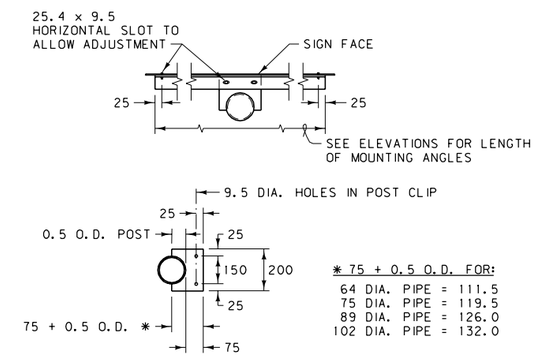

✱ 75 + 0.5 O.D. FOR:

64 DIA. PIPE = 111.5
75 DIA. PIPE = 119.5
89 DIA. PIPE = 126.0
102 DIA. PIPE = 132.0

POST CLIP DETAILS

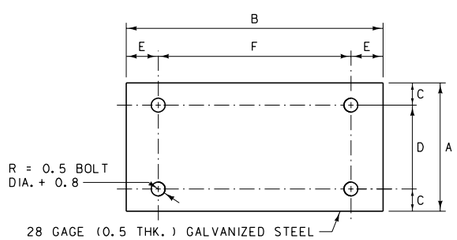

KEEPER PLATE DETAIL

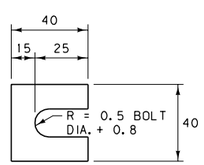

FURNISH TWO 0.3 mm ± THICK AND TWO 0.8 mm ± THICK SHIMS PER POST. USE SHIMS FABRICATED FROM BRASS SHIM STOCK OR STRIP CONFORMING TO ASTM B 36M.

SHIM DETAIL

BASE CONNECTION DATA											FOUNDATION	
NOMINAL PIPE DIA.	BOLT SIZE	BOLT TORQUE	A	B	C	D	E	F	T	Z	FOOTING DIAMETER	FOOTING DEPTH
75	M12 x 63	27 N·m	115	190	25.8	63.4	19.1	151.8	19	8	0.45 m	0.9 m
89 & 102	M12 x 63	27 N·m	140	215	25.6	88.8	18.6	177.8	19	8	0.45 m	0.9 m
127	M16 x 83	54 N·m	165	250	31.7	101.6	23.4	203.2	25	10	0.45 m	1.2 m
152	M20 x 89	88 N·m	190	285	31.5	127.0	25.0	235.0	25	10	0.45 m	1.4 m

NOTES:

USE STEEL PIPE CONFORMING TO THE REQUIREMENTS OF ASTM A 53, TYPE E OR S, GRADE B OR A 500, GRADE B.

USE CLASS "A" OR "D" CONCRETE WITH A WOOD FLOAT FINISH ON TOP. FORM TOP 300 mm OF FOUNDATION.

SEE THE STANDARD SPECIFICATIONS FOR REQUIREMENTS GOVERNING STRUCTURAL STEELS AND THEIR FABRICATION.

SUBMIT SHOP PLANS FOR APPROVAL PRIOR TO FABRICATION.

FOR SIGN PLACEMENT AND DETAILS SEE THE SIGNING DETAILED DRAWINGS.

GALVANIZE PIPE AS PER AASHTO M 111.

EXCEPT AS OTHERWISE APPROVED BY THE ENGINEER, PAINT STRUCTURAL STEEL WITH ONE SHOP COAT AND ONE FIELD COAT OF ZINC RICH BASED PAINT AND ONE FIELD COAT OF ALUMINUM PAINT AS SPECIFIED IN THE STANDARD SPECIFICATIONS, ON ALL SURFACES NOT IN CONTACT WITH THE CONCRETE.

FRANGIBLE BOLT BREAKAWAY SYSTEMS APPROVED BY FHWA ARE ALLOWED TO BE USED IN PLACE OF THE DESIGN SHOWN HERE AS AN EQUAL OPTION (PER ENGINEER'S APPROVAL).

TABLE OF WEIGHTS		
NOMINAL PIPE DIA.	NOMINAL WEIGHT (kg/m) OF PIPE	WEIGHT OF EACH BREAKAWAY DEVICE & STUB POST (kg)
75	11.28	12.71
89	13.56	16.26
102	16.06	17.44
127	21.76	27.90
152	28.23	36.99

ALL DIMENSIONS ARE MILLIMETERS (mm) UNLESS OTHERWISE NOTED.

DETAILED DRAWING

REFERENCE STANDARD SPEC. SECTION 556, 619, 704

DWG. NO. 619-12

TUBULAR SIGN POST DETAILS

EFFECTIVE: FEBRUARY 2005

MDT serving you with pride — MONTANA DEPARTMENT OF TRANSPORTATION

BASE CONNECTION DATA											FUSE PLATE DATA										FOUNDATION DATA				
POST SIZE mm x kg/m	BOLT SIZE	BOLT TORQUE	DIMENSIONS							BREAKAWAY DEVICE (kg)	DIMENSIONS								BOLT DIA.	FUSE DEVICE (kg)	FTG. DEPTH	STUB LENGTH	FTG. DIA.	BAR C SIZE	STUB POST (kg)
			A	B	C	D	E	t_1	W		F	G	H	J	K	L	N	t_3							
W100 x 19 M100 x 19.3	M16 x 70	54 N·m	215	125	18.6	69.8	27.6	19	8	9.79	95	50.8	28.2	100	57.2	21.4	16.0	10	M16	0.73	1.1 m	600	0.45 m	#16	11.79
W200 x 27			320	160	20.3	101.6	29.2	19	8	16.78	115	63.5	31.5	135	69.8	32.6	20.0	13	M20	1.48	1.7 m	750	0.60 m	#22	20.41
W200 x 36	M20 x 89	88 N·m	330	190	19.0	127.0	31.5	25	8	27.61	120	63.5	36.5	150	88.8	30.6	20.0	14	M20	2.11	2.1 m	900	0.60 m	#29	32.66
W310 x 45			430	190	21.3	127.0	31.5	25	8	35.63	135	76.2	38.8	165	88.8	38.1	22.0	14	M22	2.46	2.4 m	900	0.75 m	#29	40.82
S75 x 8	M12 x 63	27 N·m	205	75	20.0	38.0	18.5	16	6	4.70	80	38.1	29.9	65	38.0	13.5	12.0	6	M12	0.29	1.1 m	450	0.45 m	#13	3.88
S100 x 11			205	75	20.0	38.0	18.5	16	6	4.74	80	38.1	29.9	65	38.0	13.5	12.0	6	M12	0.29	1.1 m	450	0.45 m	#13	5.24
S130 x 15	M16 x 70	54 N·m	240	100	18.4	50.8	24.6	19	6	8.65	80	38.1	29.9	75	47.6	13.7	12.0	6	M12	0.30	1.1 m	450	0.45 m	#16	6.80

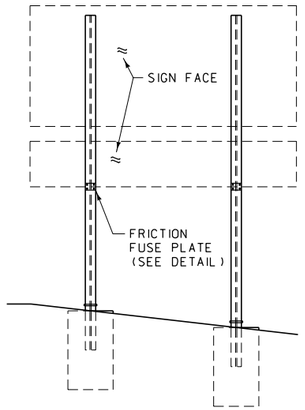

TYPICAL SIGN ELEVATION

PROCEDURE FOR BASE CONNECTION ASSEMBLY

1. ASSEMBLE POST TO STUB WITH BOLTS AND ONE FLAT WASHER BETWEEN PLATES.
2. SHIM AS REQUIRED TO PLUMB POST.
3. TIGHTEN BOLTS IN A SYSTEMATIC ORDER TO THE PRESCRIBED TORQUE (SEE TABLE).
4. LOOSEN EACH BOLT AND RETIGHTEN TO PRESCRIBED TORQUE IN THE SAME ORDER AS ORIGINAL TIGHTENING. DO NOT OVERTIGHTEN.
5. BURR THREADS AT JUNCTION WITH NUT USING A CENTER PUNCH TO PREVENT NUT LOOSENING.

NOTE:
ALL BOLTS MUST BE ASTM A 325M AND BE TIGHTENED BY USE OF A DIRECT TENSION INDICATING DEVICE (LOAD INDICATING WASHER) IN ACCORDANCE WITH THE MANUFACTURER'S SPECIFICATIONS.

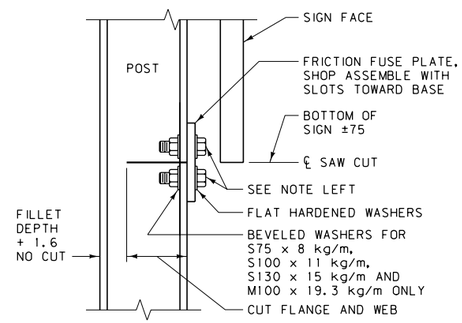

FRICTION FUSE PLATE DETAIL

DO NOT USE ON SINGLE POST SIGNS

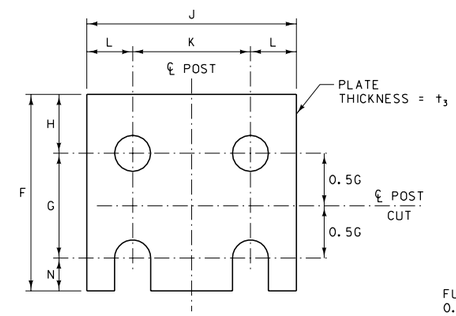

HOLE DIAMETER = BOLT DIA. + 1.6

FRICTION FUSE PLATE DETAIL

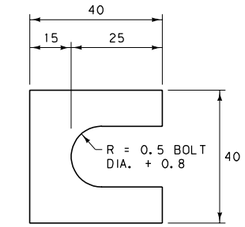

FURNISH TWO 0.3 mm ± THICK AND TWO 0.8 mm ± THICK SHIMS PER POST. USE SHIMS FABRICATED FROM BRASS SHIM STOCK OR STRIP CONFORMING TO ASTM B 36M.

SHIM DETAIL

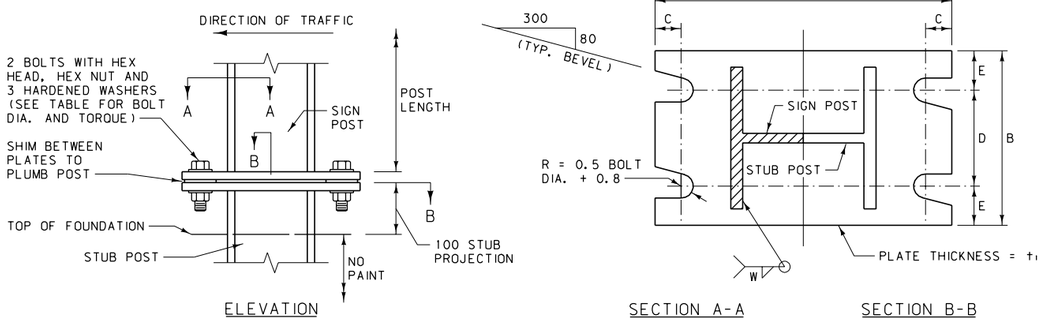

ELEVATION SECTION A-A SECTION B-B

SIGN POST AND STUB POST DETAIL "A"

NOTE:
SECTIONS SHOWN ARE FOR INSTALLATIONS ON RIGHT SHOULDER AND IN GORE. PLATE SLOT BEVELS ARE OPPOSITE HAND FROM THAT SHOWN FOR INSTALLATIONS ON LEFT SHOULDER.

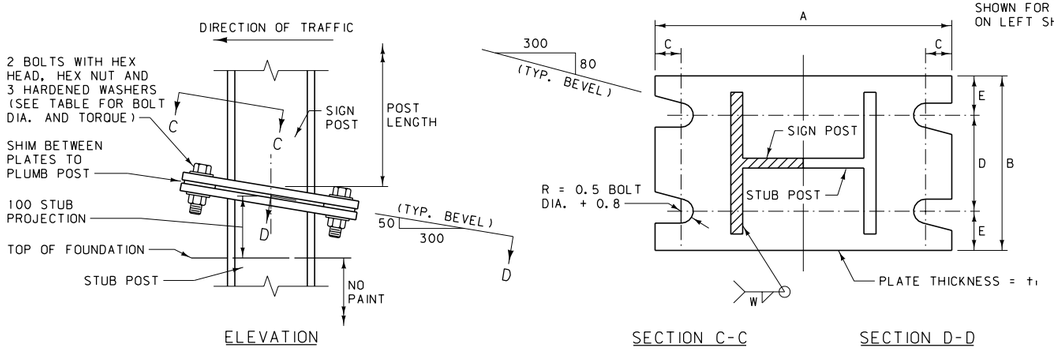

ELEVATION SECTION C-C SECTION D-D

SIGN POST AND STUB POST DETAIL "B"

USE ONLY WITH SINGLE POST SIGNS

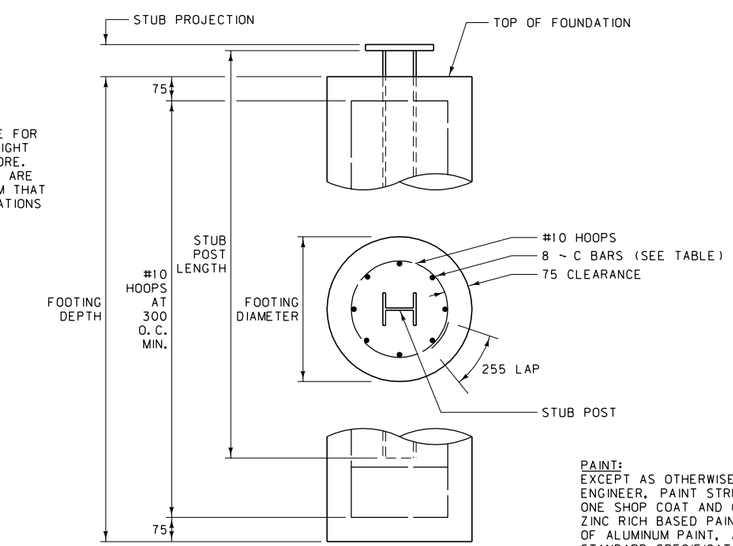

FOUNDATION DETAIL

NOTES:

USE CLASS "A" OR "D" CONCRETE WITH A WOOD FLOAT FINISH ON TOP. FORM TOP 300 mm OF FOUNDATION.

SEE THE STANDARD SPECIFICATIONS FOR REQUIREMENTS GOVERNING STRUCTURAL STEELS AND THEIR FABRICATIONS. TO AVOID OVERSIGHT, NOTE THESE REQUIREMENTS ON THE SHOP DRAWINGS.

SUBMIT SHOP PLANS FOR APPROVAL BEFORE FABRICATION IS BEGUN.

THE WEIGHT OF STEEL POSTS IS COMPUTED BY TAKING THE LENGTH OF THE POST TIMES THE NOMINAL WEIGHT PER METER PLUS THE WEIGHT OF THE BREAKAWAY DEVICE, FUSE DEVICE AND STUB POST AS SHOWN IN THE TABLE.

FOR GUIDE SIGN PLACEMENT AND DETAILS, SEE SIGNING DTL. DWG. NO. 619-08.

FRANGIBLE BOLT BREAKAWAY SYSTEMS APPROVED BY FHWA ARE ALLOWED TO BE USED IN PLACE OF THE DESIGN SHOWN HERE AS AN EQUAL OPTION (PER ENGINEER'S APPROVAL).

PAINT:
EXCEPT AS OTHERWISE APPROVED BY THE ENGINEER, PAINT STRUCTURAL STEEL WITH ONE SHOP COAT AND ONE FIELD COAT OF ZINC RICH BASED PAINT AND ONE FIELD COAT OF ALUMINUM PAINT, AS SPECIFIED IN THE STANDARD SPECIFICATIONS, ON ALL SURFACES NOT IN CONTACT WITH CONCRETE.

ALL DIMENSIONS ARE MILLIMETERS (mm) UNLESS OTHERWISE NOTED.

DETAILED DRAWING

REFERENCE STANDARD SPEC. SECTION 619

DWG. NO. 619-13

BREAKAWAY AND FOUNDATION DETAILS FOR MULTIPLE GUIDE SIGN SUPPORTS

EFFECTIVE: FEBRUARY 2005

MDT serving you with pride — MONTANA DEPARTMENT OF TRANSPORTATION

SIGNS WITHOUT BACKBRACING

(SEE PLANS FOR BACKBRACING REQUIREMENTS)

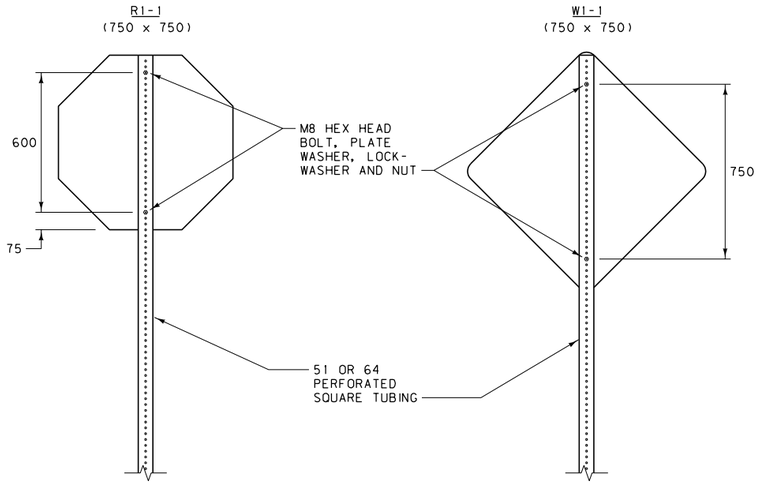

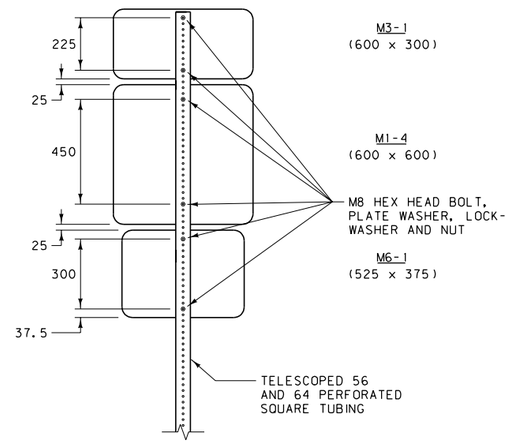

STREET NAME SIGN INSTALLATION

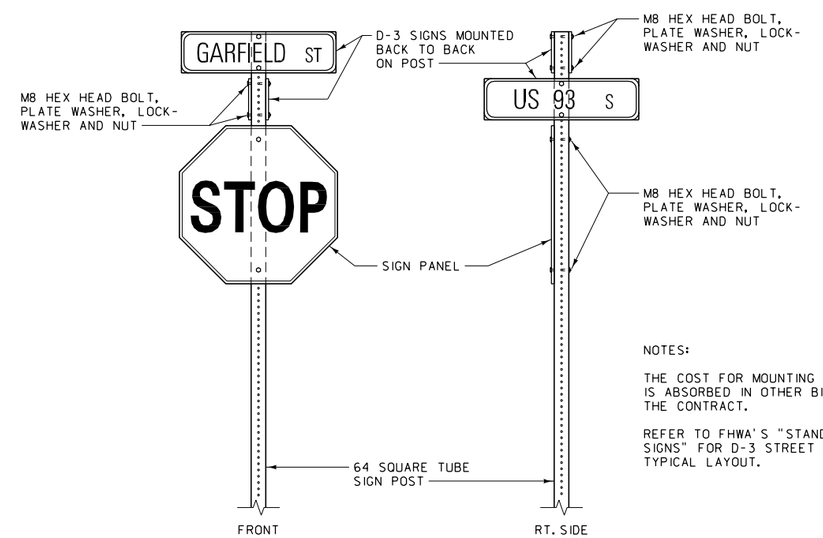

NOTES:

THE COST FOR MOUNTING D-3 SIGNS IS ABSORBED IN OTHER BID ITEMS OF THE CONTRACT.

REFER TO FHWA'S "STANDARD HIGHWAY SIGNS" FOR D-3 STREET NAME SIGN TYPICAL LAYOUT.

SIGNS WITH BACKBRACING

(SEE PLANS FOR BACKBRACING REQUIREMENTS)

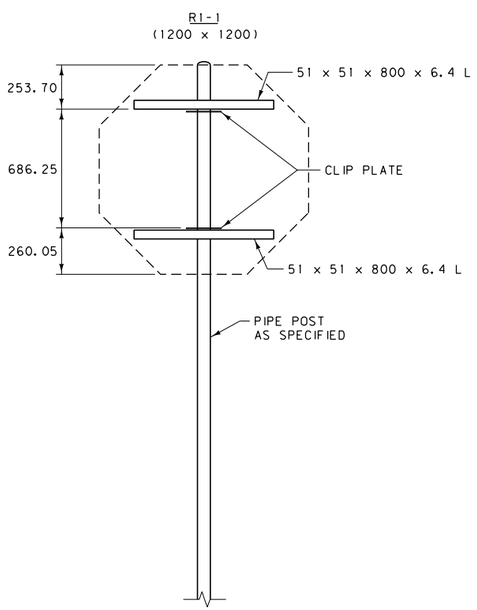

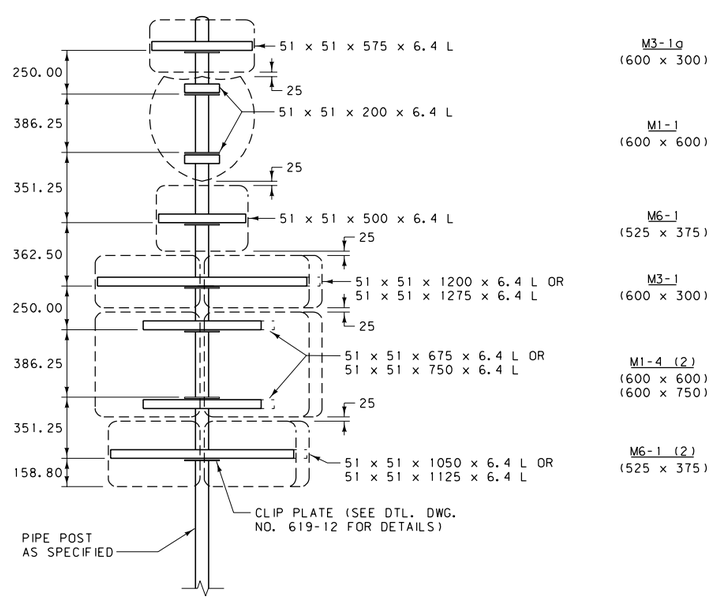

TYPICAL MOUNTING DETAILS

(FOR 75 mm DIA. AND LARGER PIPE)

ELEVATION

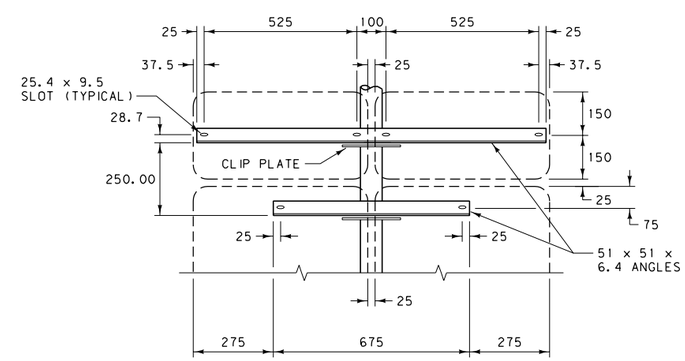

PLAN VIEW

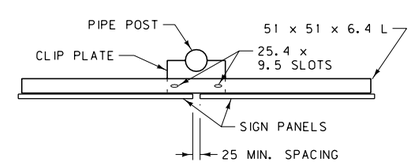

NOTES:

VERTICAL DIMENSIONS SHOWN ARE FROM TOP TO TOP OF ALL POST CLIP PLATES.

PLACE A SUITABLE WATERTIGHT CAP ON TOP OF ALL PIPE POSTS.

CONFORM MATERIAL USED IN FABRICATION OF POST CLIPS AND ANGLE BRACKETS TO SECTION 556 OF THE STANDARD SPECIFICATIONS.

THE LENGTH OF EACH ANGLE BRACKET DEPENDS ON THE MOUNTING ASSEMBLY AND HOLE SPACING OF EACH SIGN. THE ASSEMBLIES SHOWN ARE TYPICAL INSTALLATIONS. ERECT SIMILAR ASSEMBLIES IN A LIKE MANNER.

REFER TO FHWA'S "STANDARD HIGHWAY SIGNS" FOR STANDARD HOLE SPACING IN SIGNS.

ALL DIMENSIONS ARE MILLIMETERS (mm) UNLESS OTHERWISE NOTED.

DETAILED DRAWING	
REFERENCE STANDARD SPEC. SECTION 556, 619, 704	DWG. NO. 619-16
TYPICAL STEEL POST MOUNTING DETAILS	
EFFECTIVE: FEBRUARY 2005	
serving you with pride — MONTANA DEPARTMENT OF TRANSPORTATION	

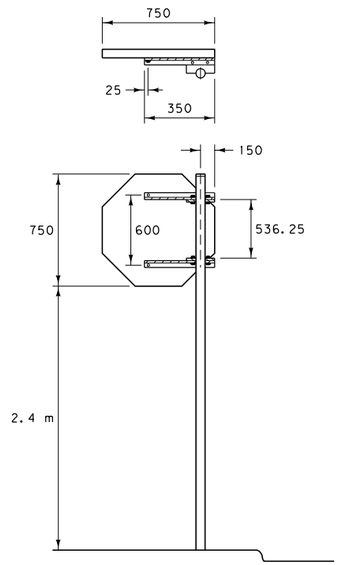

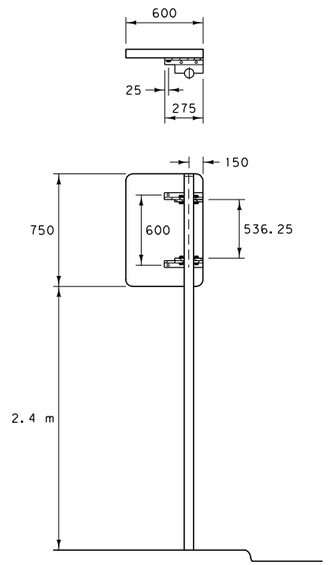

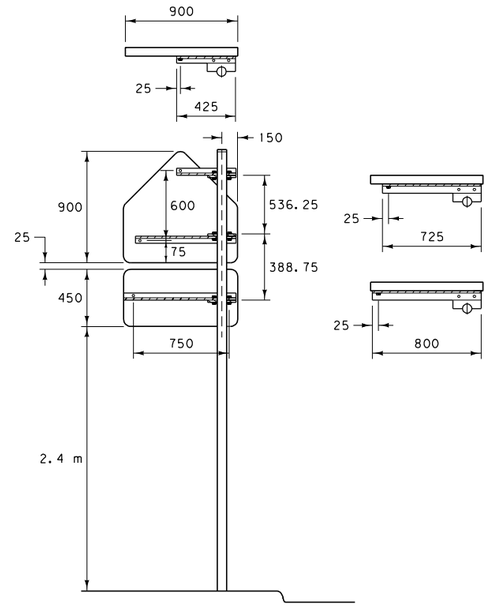

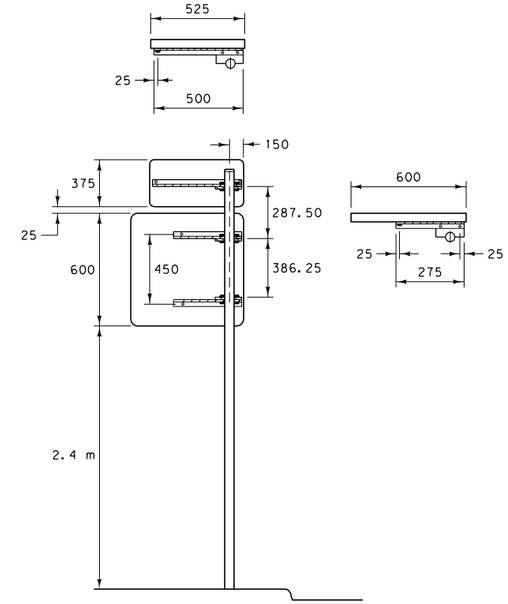

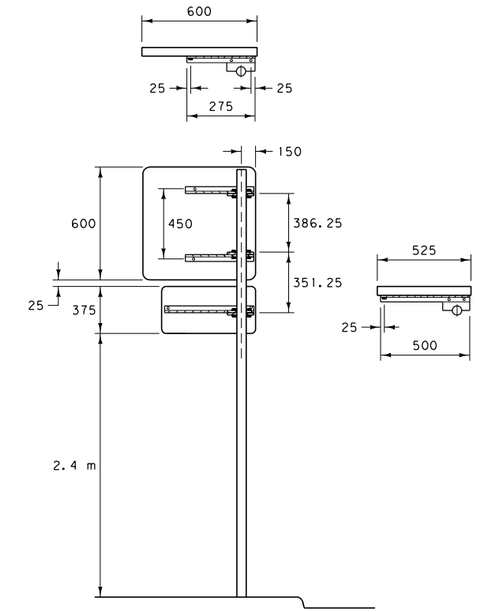

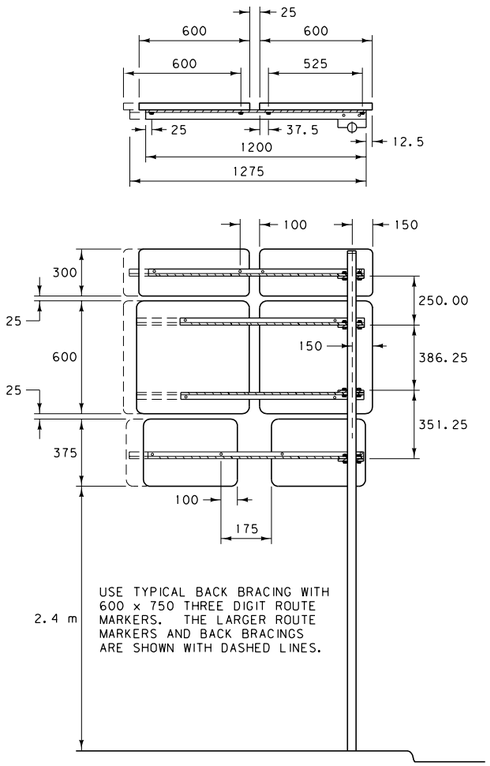

USE TYPICAL BACK BRACING WITH 600 x 750 THREE DIGIT ROUTE MARKERS. THE LARGER ROUTE MARKERS AND BACK BRACINGS ARE SHOWN WITH DASHED LINES.

NOTE:
ALTERNATE MOUNTING MUST BE APPROVED BY THE ENGINEER.

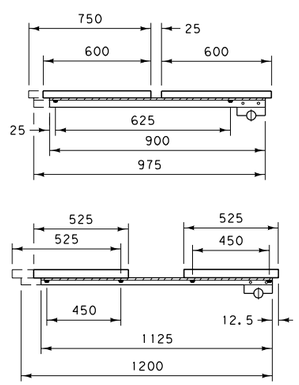

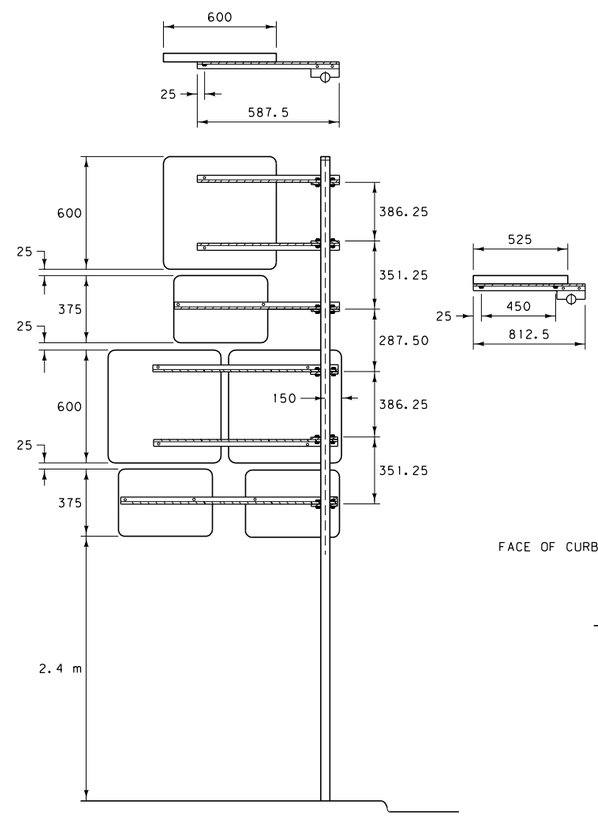

NOTES:

REFER TO FHWA'S MANUAL "STANDARD HIGHWAY SIGNS" FOR STANDARD HOLE SPACING IN SIGNS.

USE POST CLIPS AS SHOWN IN SIGNING DETAILED DRAWING NO. 619-12 WHEN CANTILEVER MOUNTING IS NECESSARY.

USE POSTS ONE SIZE LARGER THAN THOSE REQUIRED FOR STANDARD MOUNTINGS.

DIMENSIONS FOR POST CLIP SPACING ARE SHOWN TO THE TOP OF EACH CLIP.

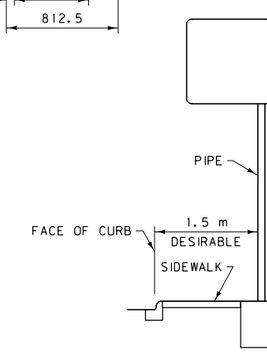

ALTERNATE A

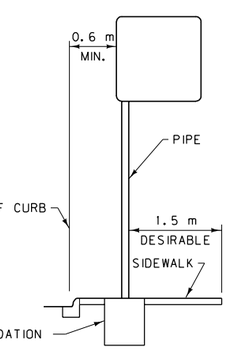

ALTERNATE B

USE THE STANDARD TYPE MOUNTING BEHIND SIDEWALKS IF R/W LIMITS PERMIT. IF R/W DOES NOT PERMIT, THEN ALTERNATE A SHOULD BE USED BEHIND SIDEWALKS OR IN THE SIDEWALK NEXT TO A BUILDING. IF CONDITIONS ARE SUCH THAT THE SIGN CANNOT BE MOUNTED ON THE BACKSIDE OF THE SIDEWALK THEN USE ALTERNATE B.

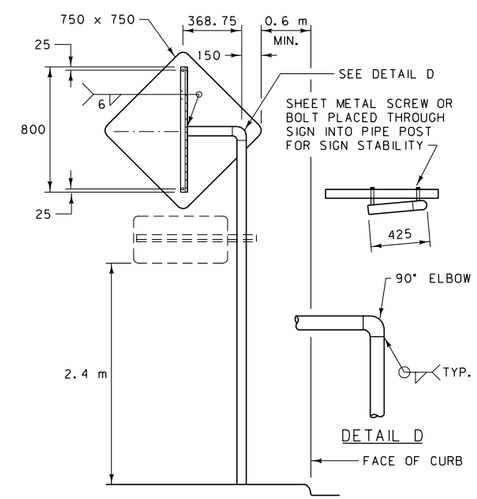

DETAIL C

ALL DIMENSIONS ARE MILLIMETERS (mm) UNLESS OTHERWISE NOTED.

DETAILED DRAWING	
REFERENCE STANDARD SPEC. SECTION 556, 619, 704	DWG. NO. 619-18
CANTILEVER TYPE SIGN SUPPORT DETAILS FOR SIDEWALK AREAS	
EFFECTIVE: FEBRUARY 2005	
serving you with pride	MONTANA DEPARTMENT OF TRANSPORTATION

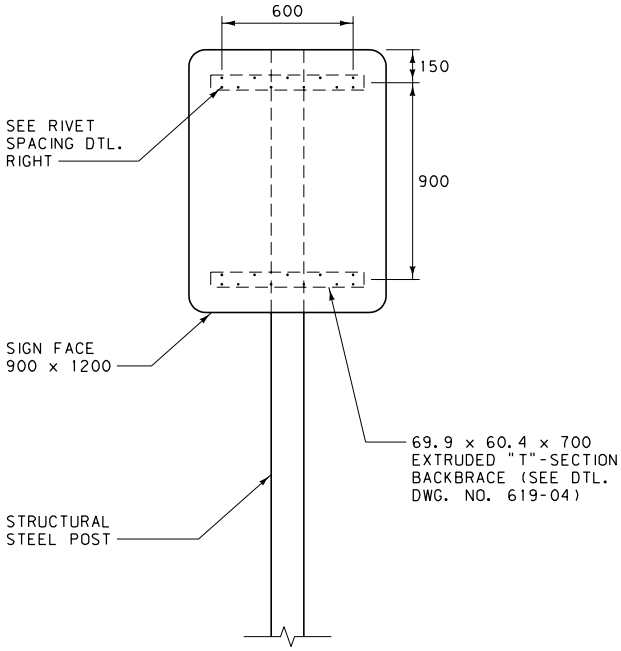

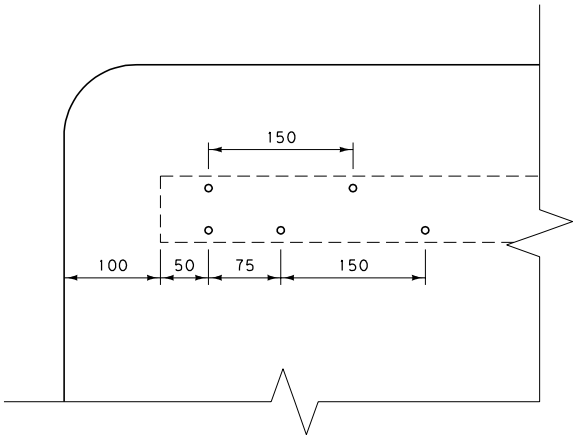

RIVET SPACING

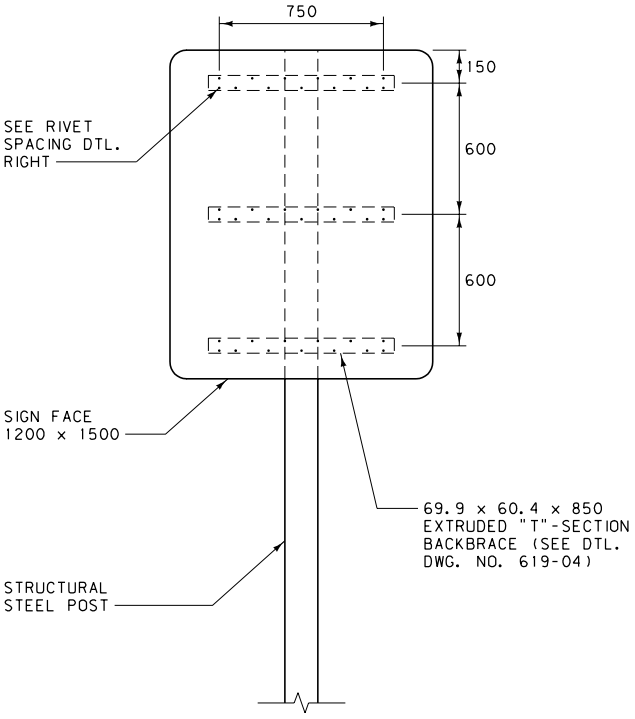

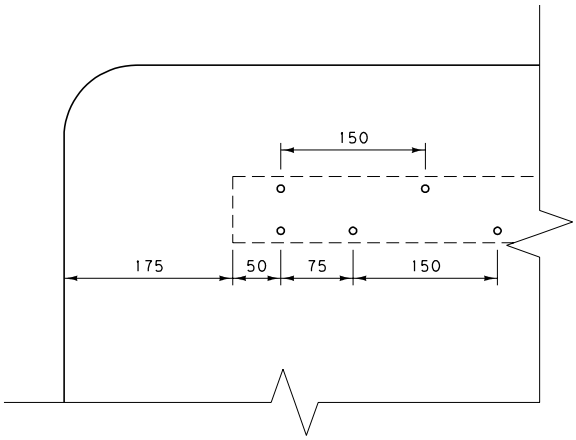

RIVET SPACING

ALL DIMENSIONS ARE MILLIMETERS (mm) UNLESS OTHERWISE NOTED.

NOTE:
SEE THE PLANS FOR BACKBRACING REQUIREMENTS.

DETAILED DRAWING	
REFERENCE STANDARD SPEC. SECTION 619, 704	DWG. NO. 619-19
STRUCTURAL STEEL POST SIGN MOUNTING DETAILS	
EFFECTIVE: FEBRUARY 2005	
serving you with pride	MONTANA DEPARTMENT OF TRANSPORTATION

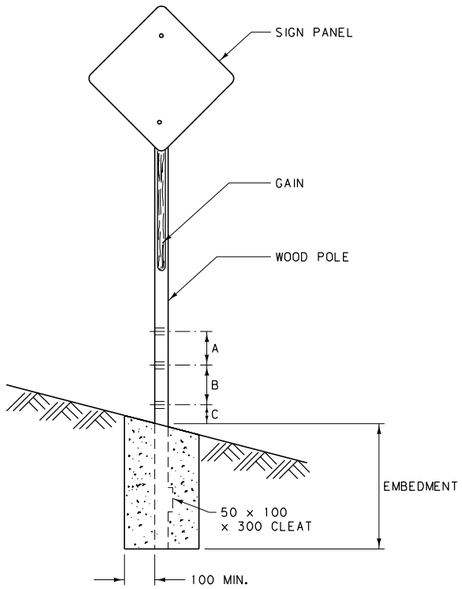

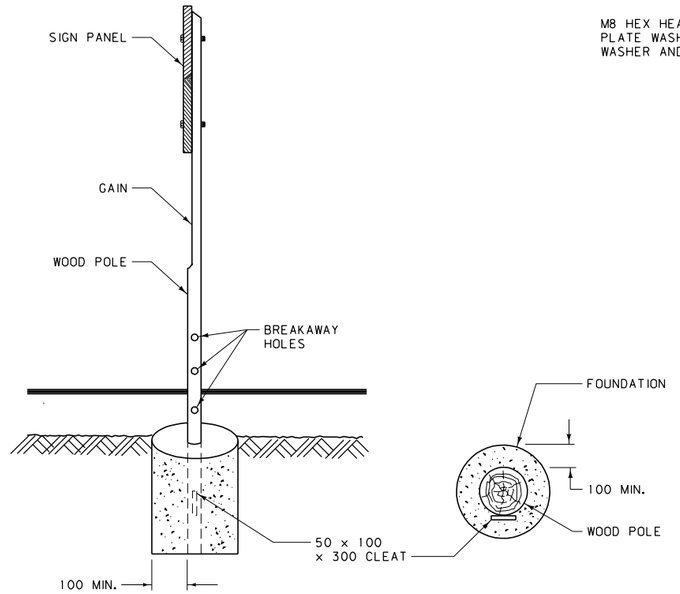

BREAKAWAY AND FOOTING DETAILS

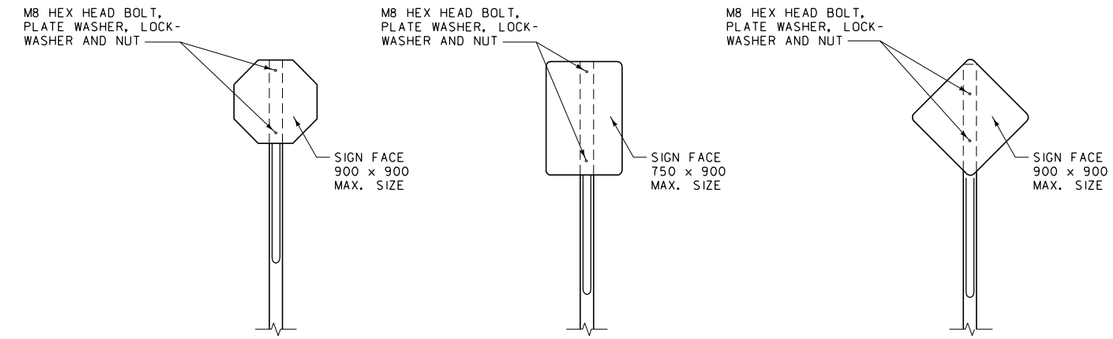

REGULATORY SIGNS

WARNING SIGNS

TYPICAL SIGN MOUNTINGS

(NO BACKBRACING)

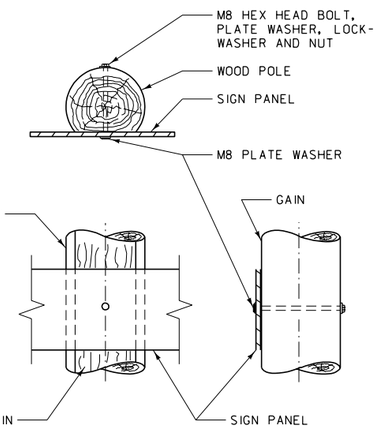

SIGN MOUNTING DETAIL

NOTES:

CONFORM ALL WOOD POLES TO THE REQUIREMENTS OF SECTION 704 OF THE STANDARD SPECIFICATIONS.

GAIN ALL POLES ON THE SIGN SIDE THE MINIMUM WIDTH SHOWN IN THE TABLE, FOR HALF THE LENGTH OF EACH POLE.

BREAKAWAY DETAILS ARE STANDARD FOR ALL WOOD POLES LISTED IN THE TABLE, ON SINGLE AND MULTIPLE SIGN SUPPORTS.

ALL BOLTS, NUTS AND WASHERS MUST CONSIST OF ALUMINUM, STAINLESS STEEL OR CADMIUM PLATED STEEL MATERIAL.

ATTACH A 50 mm x 100 mm x 300 mm BOARD 300 mm FROM THE BOTTOM OF THE POLE TO PREVENT SPINNING. ATTACH THIS CLEAT BY DRIVING TWO 16d NAILS THROUGH THE CLEAT AND INTO THE POLE. TREAT THE 50 mm x 100 mm CLEAT ACCORDING TO THE STANDARD SPECIFICATIONS.

⊗ THE MAXIMUM CROSS-SECTIONAL AREA AT A POINT 100 mm ABOVE GROUND LEVEL MAY NOT EXCEED 15 480 SQUARE MILLIMETERS EXCLUSIVE OF DRILLED BREAKAWAY HOLES FOR UNPROTECTED POST INSTALLATIONS. THE HOLE DIAMETER MAY BE ENLARGED IF NECESSARY TO INSURE THIS REQUIREMENT IS MET.

USE SOIL CEMENT FOR THE FOUNDATION - SEE SECTION 619.03.3 OF THE STANDARD SPECIFICATIONS.

FOR SIGNS REQUIRING BACKBRACING, CONSULT DTL. DWG. NO. 619-21 AND 619-22 FOR BACKBRACING OPTIONS AND DETAILS.

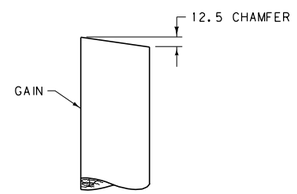

TOP END TREATMENT

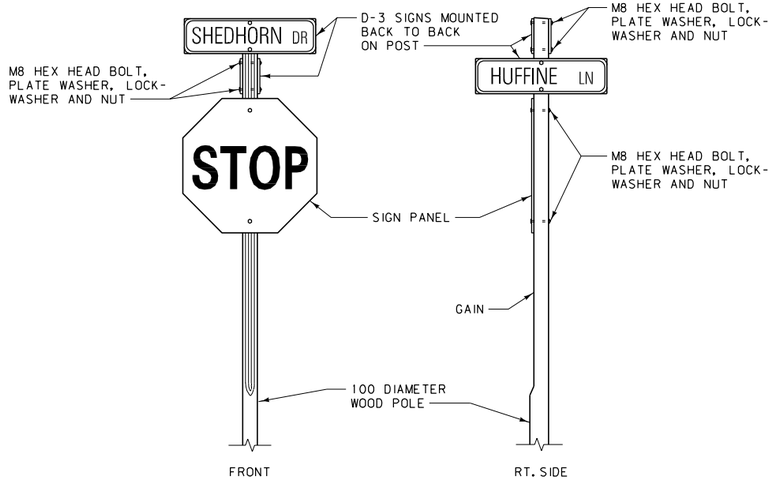

NOTES:

THE COST FOR MOUNTING D-3 SIGNS IS ABSORBED IN OTHER BID ITEMS OF THE CONTRACT.

REFER TO FHWA'S "STANDARD HIGHWAY SIGNS" FOR D-3 STREET NAME SIGN TYPICAL LAYOUT.

STREET NAME SIGN INSTALLATION

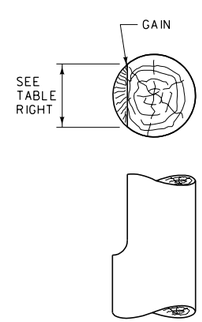

GAIN DETAIL

POLE SIZE	A	B	C	HOLE DIA. (SEE NOTE ⊗)	EMBEDMENT	GAIN
75 TOP DIA.	~	~	~	~	0.9 m	70
100 TOP DIA.	~	~	~	~	0.9 m	90
130 TOP DIA.	~	300	100	51	1.1 m	100
150 TOP DIA.	~	300	100	64	1.4 m	100
CLASS 4	~	300	100	51	1.5 m	100
CLASS 3	~	300	100	64	1.7 m	100
CLASS 2	150	150	100	51	1.8 m	100
CLASS 1	150	150	100	64	2.0 m	100

MUST BE PROTECTED OR OUT OF CLEAR ZONE

ALL DIMENSIONS ARE MILLIMETERS (mm) UNLESS OTHERWISE NOTED.

DETAILED DRAWING

REFERENCE STANDARD SPEC. SECTION 619, 704

DWG. NO. 619-20

TREATED WOOD POLE SIGN MOUNTING AND SUPPORT DETAILS

EFFECTIVE: FEBRUARY 2005

serving you with pride

MONTANA DEPARTMENT OF TRANSPORTATION

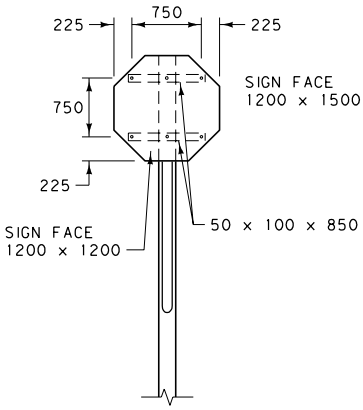

REGULATORY SIGNS

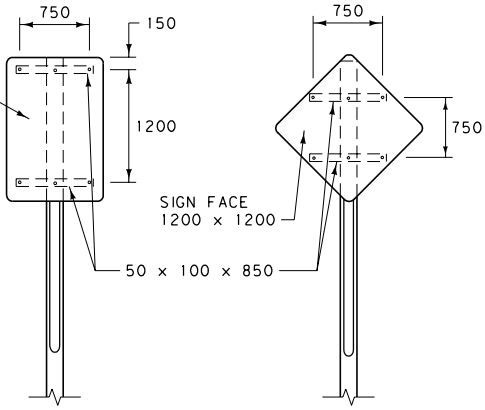

WARNING SIGNS

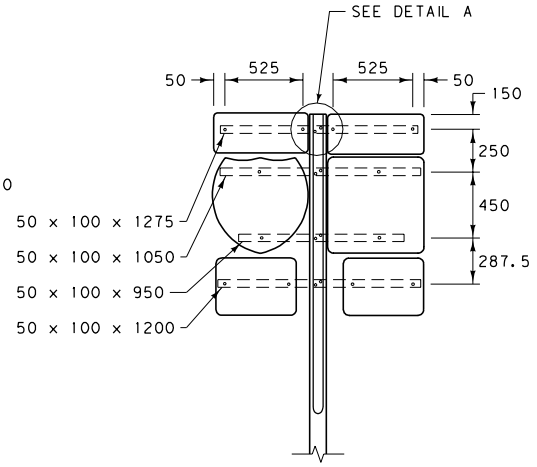

ROUTE MARKER ASSEMBLY

NOTE:

SIGNS OF THESE SIZES AND LARGER REQUIRE WOOD BACKBRACING.

SMALLER SIGNS MAY REQUIRE BACKBRACING IF THE CONDITIONS WARRANT (SEE SIGNING PLANS). IN THIS CASE, THE CONTRACTOR HAS THE OPTION OF USING WOOD OR STEEL BACKBRACING (SEE DTL. DWG. NO. 619-22).

WOOD BACKBRACE INSTALLATIONS

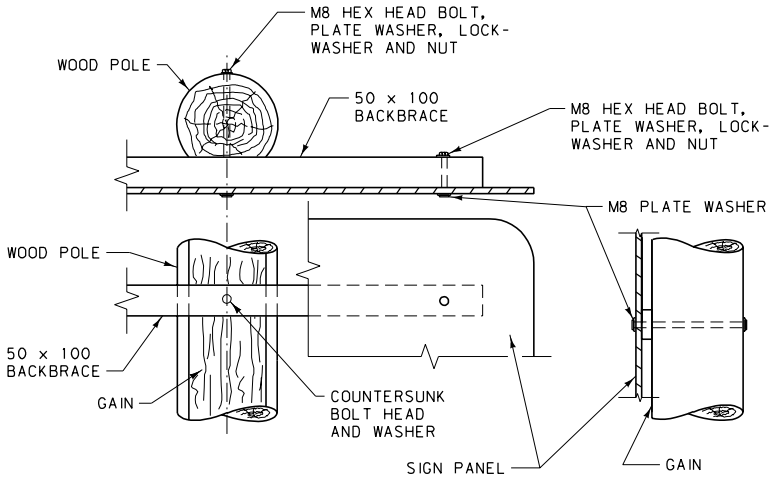

SIGN MOUNTING DETAIL

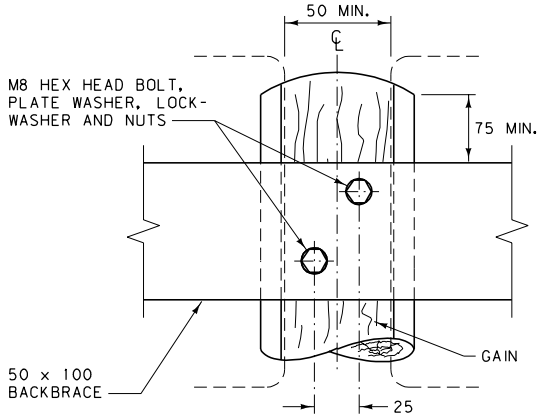

DETAIL A
(BACKBRACE)

NOTES:

CONFORM ALL WOOD POLES TO THE REQUIREMENTS OF SECTION 704 OF THE STANDARD SPECIFICATIONS.

GAIN ALL POLES ON THE SIGN SIDE THE MINIMUM WIDTH SHOWN IN THE TABLE ON DTL. DWG. NO. 619-20, FOR HALF THE LENGTH OF EACH POLE.

USE 50 mm x 100 mm S4S LUMBER FOR ALL WOOD BACK-BRACING, CONFORMING TO THE REQUIREMENTS OF SECTION 704 OF THE STANDARD SPECIFICATIONS.

ALL BOLTS, NUTS AND WASHERS MUST CONSIST OF ALUMINUM, STAINLESS STEEL OR CADMIUM PLATED STEEL MATERIAL.

SEE DTL. DWG. NO. 619-20 FOR BREAKAWAY AND SUPPORT DETAILS.

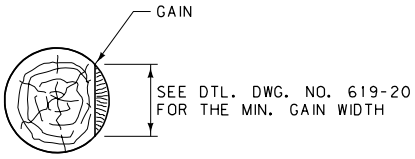

GAIN DETAIL

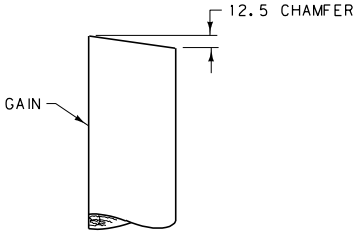

TOP END TREATMENT

ALL DIMENSIONS ARE MILLIMETERS (mm) UNLESS OTHERWISE NOTED.

DETAILED DRAWING	
REFERENCE STANDARD SPEC. SECTION 619, 704	DWG. NO. 619-21
TREATED WOOD POLE SIGN MOUNTING DETAILS	
EFFECTIVE: FEBRUARY 2005	

MDT serving you with pride — MONTANA DEPARTMENT OF TRANSPORTATION

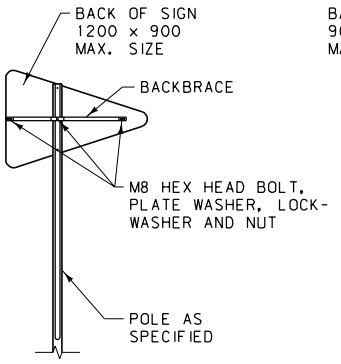

NO PASSING PENNANTS

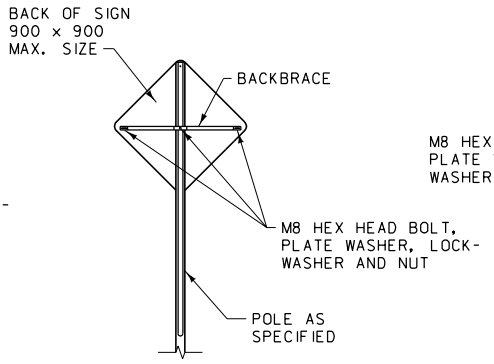

WARNING SIGNS

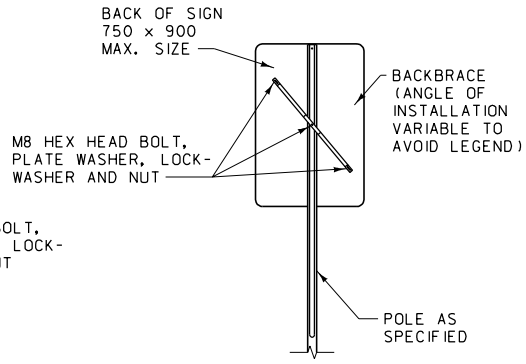

REGULATORY SIGNS

STEEL BACKBRACE INSTALLATIONS

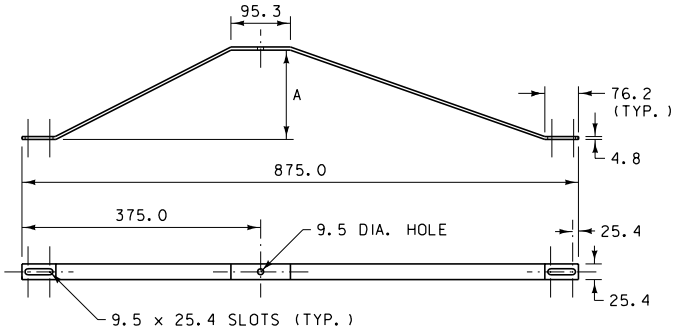

NO PASSING PENNANTS

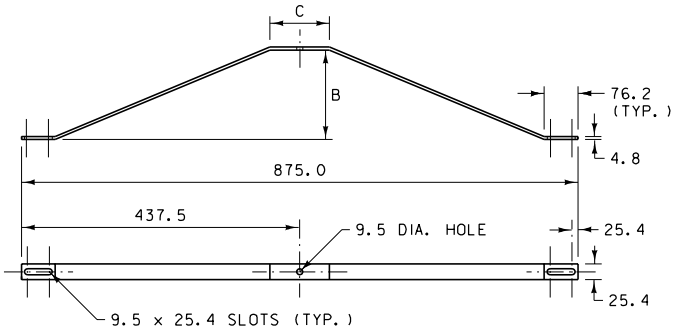

REGULATORY AND WARNING SIGNS

STEEL BACKBRACE DETAILS

POLE DIA.	A	B	C
75	54.0	54.0	95.3
100	76.2	76.2	95.3
130	~	101.6	108.0
150	~	133.4	108.0

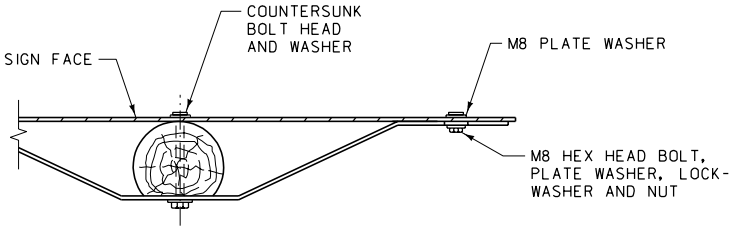

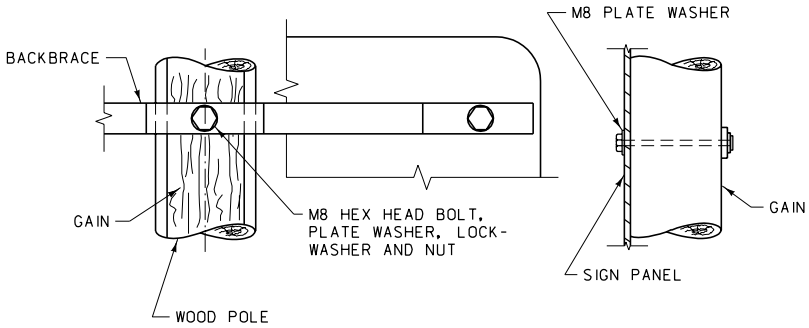

SIGN MOUNTING DETAIL

NOTES:

USE COMMERCIAL QUALITY, MILD STEEL, HOT-DIPPED AFTER FABRICATION. GALVANIZE ACCORDING TO THE SPECIFICATIONS OF AASHTO M 111.

SEE DTL. DWG. NO. 619-21 FOR APPLICATIONS OF THIS TYPE OF BRACE AND ADDITIONAL SIGN MOUNTING REQUIREMENTS.

SEE DTL. DWG. NO. 619-20 FOR BREAKAWAY AND SUPPORT DETAILS.

ALL DIMENSIONS ARE MILLIMETERS (mm) UNLESS OTHERWISE NOTED.

DETAILED DRAWING

REFERENCE
STANDARD SPEC.
SECTION 619

DWG. NO.
619-22

TREATED WOOD POLE
OPTIONAL BACKBRACE

EFFECTIVE: FEBRUARY 2005

serving you with pride

MONTANA DEPARTMENT OF TRANSPORTATION

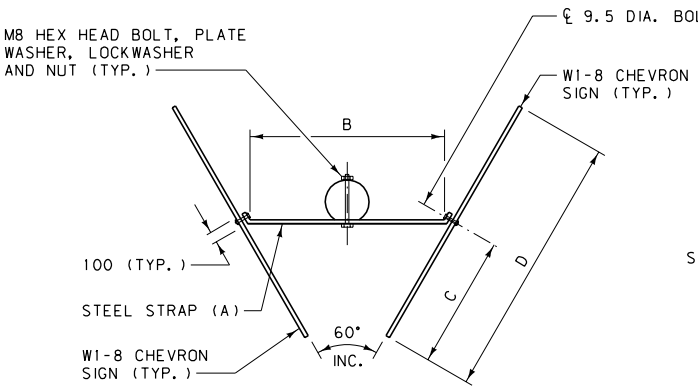

PLAN VIEW

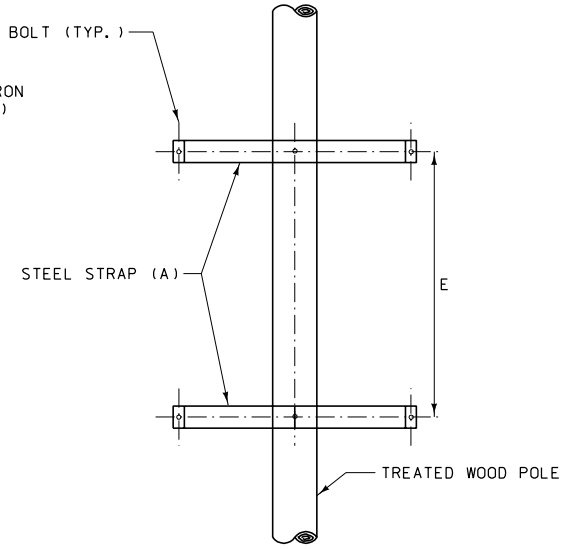

ELEVATION

SIGN SIZE	DIMENSIONS				
	A	B	C	D	E
450 x 600	6 x 50 x 580	380	225	450	450
600 x 750	6 x 50 x 655	455	300	600	600
750 x 900	6 x 50 x 735	535	375	750	750
900 x 1200	6 x 50 x 810	610	450	900	900

WOOD POST MOUNTING

MOUNT 2 CHEVRON SIGNS ON EACH POST WITH EACH PANEL ADJUSTED TO APPROXIMATE RIGHT ANGLE TO ROADWAY CENTERLINE. EXACT LOCATION AND ANGLE TO BE DETERMINED BY ENGINEER.

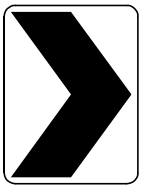

W1-8 CHEVRON ALIGNMENT SIGNS MAY BE USED AS AN ALTERNATE OR AS A SUPPLEMENT TO DELINEATION TO PROVIDE ADDITIONAL EMPHASIS AND GUIDANCE WHEN A CHANGE IN HORIZONTAL ALIGNMENT EXISTS IN THE ROADWAY.

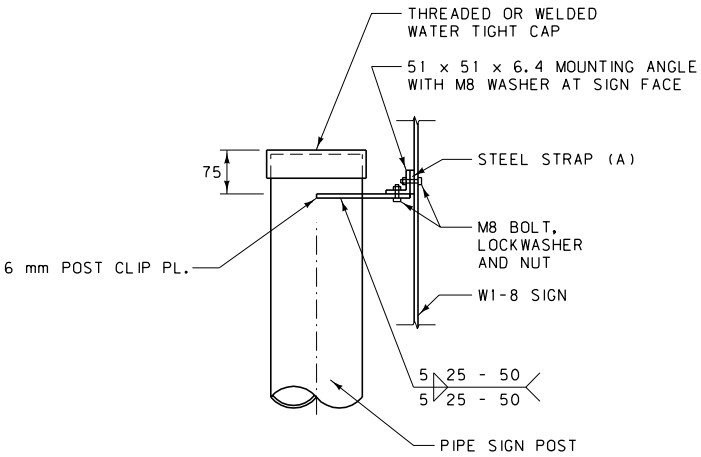

STEEL PIPE MOUNTING

NOTES:

INSTALL CHEVRONS WITH A MINIMUM 3.1 m HORIZONTAL CLEARANCE AND A 1.5 m VERTICAL MOUNTING HEIGHT.

SPACING FOR DESIGN PURPOSES IS DOUBLE THE SPACING SHOWN IN THE TABLE ON DTL. DWG. NO. 619-36, UP TO A MAXIMUM CHEVRON SPACING OF 60 m. A MINIMUM OF 3 VISIBLE CHEVRONS ARE REQUIRED THROUGH A CURVE.

FIELD INSPECT THE CHEVRONS AT NIGHT AND ADJUST THEIR LOCATIONS TO ACHIEVE 150 m OF VISIBILITY.

ALL DIMENSIONS ARE MILLIMETERS (mm) UNLESS OTHERWISE NOTED.

DETAILED DRAWING

REFERENCE STANDARD SPEC. SECTION 619

DWG. NO. 619-24

CHEVRON MOUNTING DETAILS

EFFECTIVE: FEBRUARY 2005

MDT serving you with pride — MONTANA DEPARTMENT OF TRANSPORTATION

PANELS

FOR USE ON ROUTE MARKER ASSEMBLIES

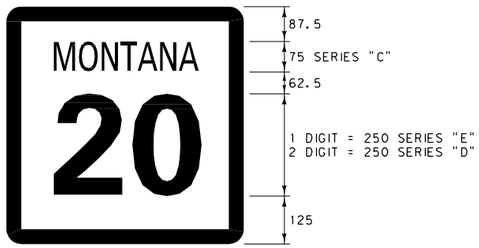

M1-5

600 x 600

MARGIN = NONE

BORDER = 37.5

CORNER RADIUS = 37.5

BLACK LEGEND AND BORDER ON A RETRO-REFLECTORIZED WHITE BACKGROUND.

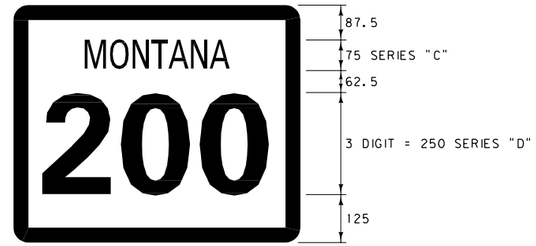

M1-5

750 x 600

MARGIN = NONE

BORDER = 37.5

CORNER RADIUS = 37.5

BLACK LEGEND AND BORDER ON A RETRO-REFLECTORIZED WHITE BACKGROUND.

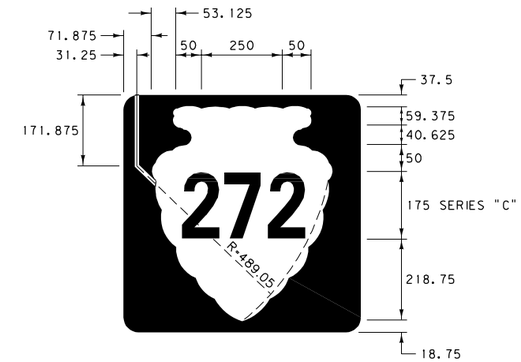

M1-10

600 x 600

MARGIN = NONE

BORDER = SEE DESIGN ABOVE

CORNER RADIUS = 37.5

BLACK LEGEND AND BORDER ON A RETRO-REFLECTORIZED WHITE BACKGROUND.

SHIELDS

FOR USE ON GUIDE SIGNS

SERIES "D" NUMERALS

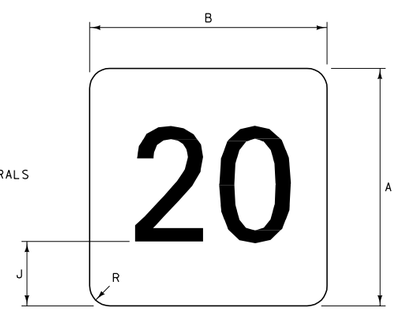

SERIES "C" NUMERALS

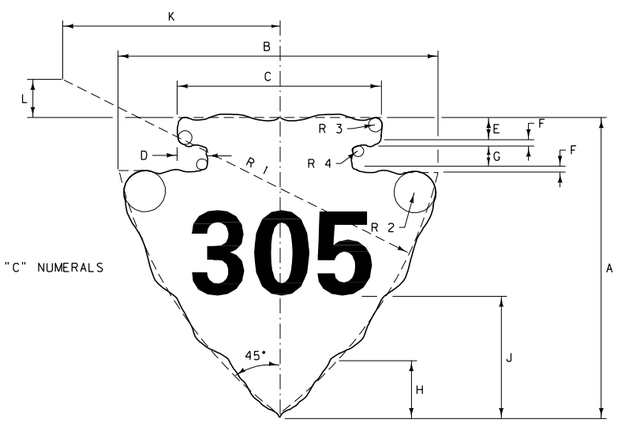

NOTES:

CENTER ALL NUMERALS USED ON PANELS AND SHIELDS OPTICALLY ABOUT VERTICAL CENTERLINE.

SEE SIGNS AND SIGNING MATERIALS CATALOG FOR COMPLETE LISTING OF SIGNS AND SIGN SIZES. DESIGNS ARE AVAILABLE FROM THE TRAFFIC UNIT FOR SIGNS UNIQUE TO MONTANA.

	250 mm NUMERALS		300 mm NUMERALS		450 mm NUMERALS	
	2 DIGIT	3 DIGIT	2 DIGIT	3 DIGIT	2 DIGIT	3 DIGIT
A	525	525	600	600	900	900
B	600	750	600	750	900	1125
J	150	150	162.5	162.5	237.5	237.5
R	37.5	37.5	50	50	62.5	62.5

BLACK LEGEND ON A RETRO-REFLECTORIZED WHITE BACKGROUND WITH NO BORDER.

													RADII			
		A	B	C	D	E	F	G	H	J	K	L	R 1	R 2	R 3	R 4
*	200 mm NUMERALS	650	700	462.5	65.625	75	7.8125	50	137.5	275	425	56.25	800	43.75	15.625	7.8125
**	250 mm NUMERALS	800	850	562.5	81.25	90.625	9.375	62.5	168.75	343.75	512.5	50	962.5	50	18.75	9.375
***	300 mm NUMERALS	1000	1050	700	100	112.5	12.5	75	210.9375	425	625	71.875	1200	62.5	25	12.5

BLACK LEGEND ON A RETRO-REFLECTORIZED WHITE BACKGROUND.

* USE WITH STANDARD 600 mm U.S. SHIELD.

** USE WITH STANDARD 750 AND 900 mm U.S. SHIELD.

*** USE WITH STANDARD 1050 mm U.S. SHIELD AND ALL INDEPENDENT USE.

ALL DIMENSIONS ARE MILLIMETERS (mm) UNLESS OTHERWISE NOTED.

DETAILED DRAWING

REFERENCE STANDARD SPEC. SECTION 619

DWG. NO. 619-26

SPECIAL DESIGN ROUTE MARKER PANELS AND SHIELDS

EFFECTIVE: FEBRUARY 2005

serving you with pride

MONTANA DEPARTMENT OF TRANSPORTATION

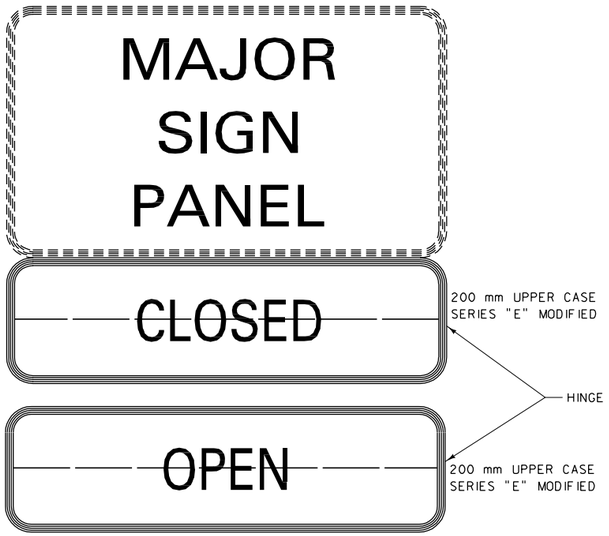

ALUMINUM SHEET MOUNTING

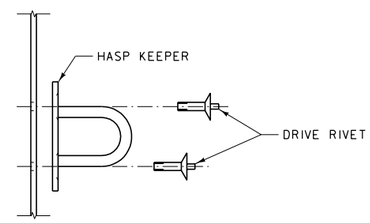

PLYWOOD MOUNTING

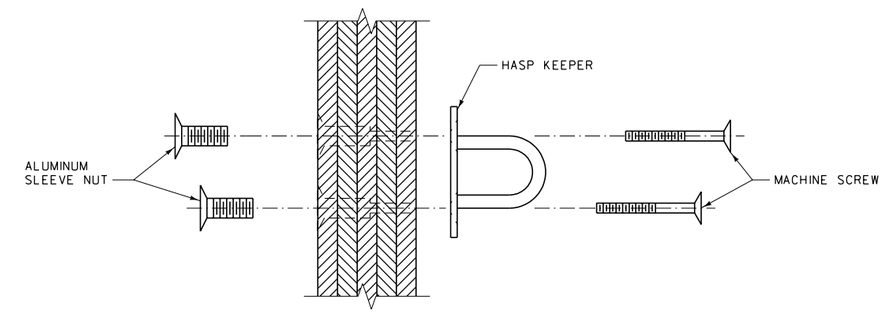

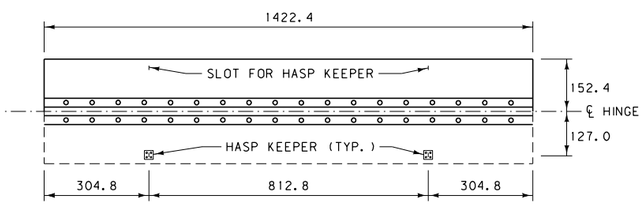

HINGE DETAIL
EXAMPLE

(1650 x 1200 D8-2A WEIGH STATION SIGN SHOWN)

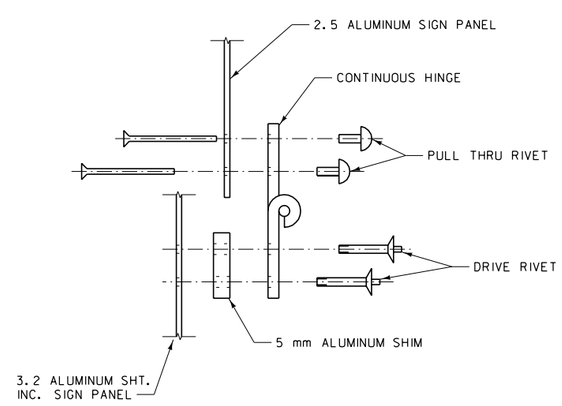

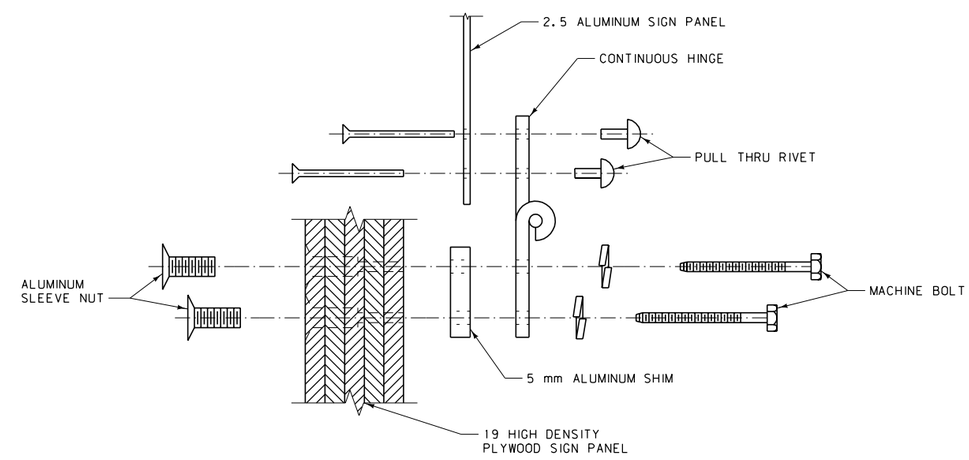

NOTES:

SEE SIGNS AND SIGNING MATERIALS CATALOG FOR COMPLETE LISTING OF SIGNS AND SIGN SIZES. DESIGNS ARE AVAILABLE FROM THE TRAFFIC UNIT FOR SIGNS UNIQUE TO MONTANA.

THE SIGN PANEL CONSISTS OF 19 mm HIGH DENSITY PLYWOOD OR 3.2 mm ALUMINUM SHEET INCREMENT AS SPECIFIED ON THE PLANS. THE HINGED PANEL CONSISTS OF 2.5 mm SHEET ALUMINUM.

PAINT ALL HARDWARE VISIBLE ON THE SIGN FACE OR COVER WITH RETRO-REFLECTIVE SHEETING, THE SAME COLOR AS THE SIGN.

SUBMIT SHOP DRAWINGS FOR APPROVAL PRIOR TO FABRICATION.

SUPPLEMENTAL SIGN PANEL BELOW MAJOR SIGN PANEL MUST HAVE RETRO-REFLECTORIZED LEGEND AND BACKGROUND MATCHING COLORS OF MAJOR PANEL.

THE MINIMUM MOUNTING HEIGHT TO THE BOTTOM OF THE SECONDARY PANEL IS 1.5 m.

ALL DIMENSIONS ARE MILLIMETERS (mm) UNLESS OTHERWISE NOTED.

DETAILED DRAWING	
REFERENCE STANDARD SPEC. SECTION 619.704	DWG. NO. 619-30
SIGN HINGE DETAILS	
EFFECTIVE: FEBRUARY 2005	
serving you with pride	MONTANA DEPARTMENT OF TRANSPORTATION

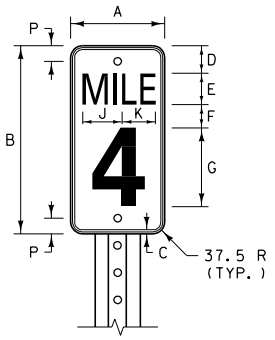

D10-1 AND D10-4

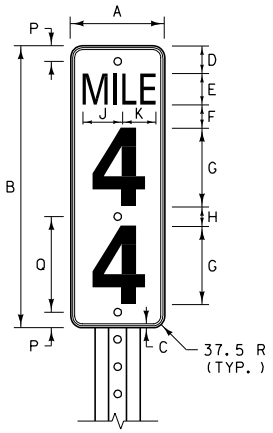

D10-2 AND D10-5

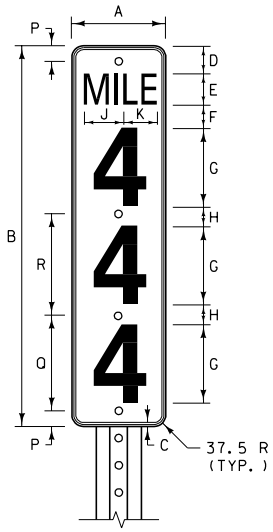

D10-3 AND D10-6

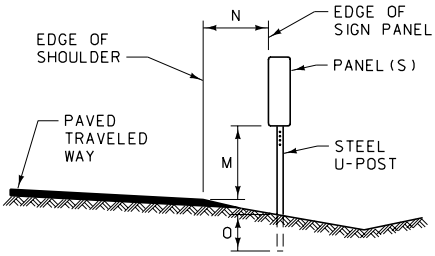

DIMENSION	INTERSTATE	NON-INTERSTATE
M	1.2 m	1.2 m
N	1.8 m	0.6 m TO 1.8 m ✱
O	0.6 m MIN.	0.6 m MIN.

✱ NORMALLY IN LINE WITH DELINEATORS

TYPICAL PLACEMENT

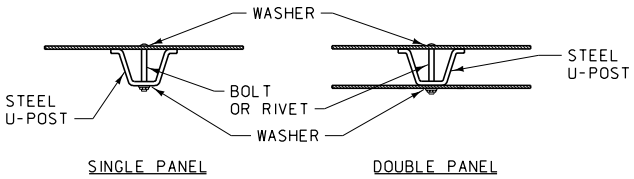

TYPICAL PANEL MOUNTING

PANEL DIMENSION INFORMATION

INTERSTATE			
DIMENSION	D10-4 (1 DIGIT)	D10-5 (2 DIGIT)	D10-6 (3 DIGIT)
A	300	300	300
B	600	900	1200
C	12.5	12.5	12.5
D	87.5	75	75
E	100 SERIES "C"	100 SERIES "C"	100 SERIES "C"
F	75	75	75
G ⊛	250 SERIES "C"	250 SERIES "C"	250 SERIES "C"
H	~	75	62.5
J	115	115	115
K	120	120	120
P	50	50	50
Q	~	325	300
R	~	~	325

NON-INTERSTATE			
DIMENSION	D10-1 (1 DIGIT)	D10-2 (2 DIGIT)	D10-3 (3 DIGIT)
A	250	250	250
B	450	675	900
C	12.5	12.5	12.5
D	50	50	50
E	100 SERIES "B"	100 SERIES "B"	100 SERIES "B"
F	50	50	50
G ⊛	150 SERIES "C"	150 SERIES "C"	150 SERIES "C"
H	~	75	75
J	90	90	90
K	95	95	95
P	37.5	37.5	37.5
Q	~	250	250
R	~	~	225

⊛ OPTICALLY CENTER DIGITS ON VERTICAL ℄ OF PANEL.

NOTES:

REFERENCE POST PANELS CONSIST OF A RETRO-REFLECTORIZED WHITE LEGEND AND BORDER ON A RETRO-REFLECTORIZED GREEN BACKGROUND.

MOUNT ALL REFERENCE POSTS ON STEEL U-POSTS (MIN. 3 kg/m) EXCEPT THE D10-6, WHICH IS MOUNTED ON A STEEL U-POST (MIN. 4.5 kg/m) AS NOTED IN THE SIGNING PLANS.

USE GALVANIZED OR CADMIUM PLATED M8 BOLT, NUT AND WASHER, AND JAM THREADS AFTER TIGHTENING. USE 8 mm DIA. ALUMINUM OR CADMIUM PLATED BOLT RIVETS OR PAINT RIVET HEADS WITH BRILLIANT GREEN SIGN ENAMEL.

DO NOT RELOCATE OR MOVE A REFERENCE POST ONCE IT HAS BEEN PROPERLY PLACED.

ALL DIMENSIONS ARE MILLIMETERS (mm) UNLESS OTHERWISE NOTED.

DETAILED DRAWING

REFERENCE
STANDARD SPEC.
SECTION 619

DWG. NO.
619-32

REFERENCE POST DETAILS

EFFECTIVE: FEBRUARY 2005

MDT serving you with pride

MONTANA DEPARTMENT OF TRANSPORTATION

DESIGN A USAGE:

USE FOR CONTINUOUS DELINEATION AND RT. SHOULDER OF ALL ROUTES.

DESIGN H USAGE:

USE ON LT. SHOULDER OF INTERSTATE ROUTES.

DESIGN B USAGE:

USE ON LT. SHOULDER OF INTERSTATE RAMPS.

DESIGN G USAGE:

USE ON RT. SHOULDER OF INTERSTATE RAMPS.

DESIGN J USAGE:

USE FOR TRUCK ESCAPE RAMPS ONLY.

DESIGN C USAGE:

USE FOR CURVES WITH RADII 170 m OR LESS, BOTH OUTSIDE AND INSIDE OF CURVE.

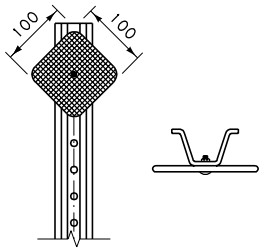

DESIGN A (WHITE)
DESIGN H (YELLOW)

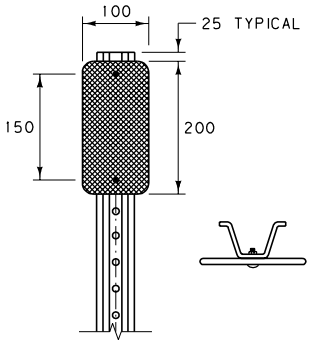

DESIGN B (YELLOW)
DESIGN G (WHITE)
DESIGN J (RED)

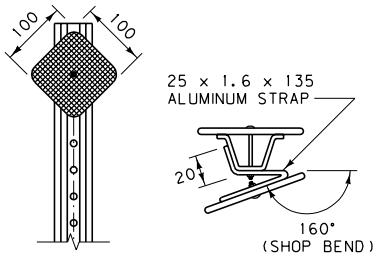

DESIGN C (WHITE)

DESIGN D USAGE:

NON-INTERSTATE ROUTES:
USE AT APPROACHES WITH STOP OR YIELD SIGNS.
INTERSTATE ROUTES:
USE FOR RAMP TERMINATION AT CROSS ROAD.

DESIGN E USAGE:

SPECIAL USE ONLY.
FORMERLY USED AT GORES AND ISLAND NOSES.

DESIGN F USAGE:

USE FOR CURVES WITH RADII GREATER THAN 170 m;
450 m TO 231 m RADIUS:
OUTSIDE ONLY.
230 m TO 171 m RADIUS:
OUTSIDE AND INSIDE OF CURVE.

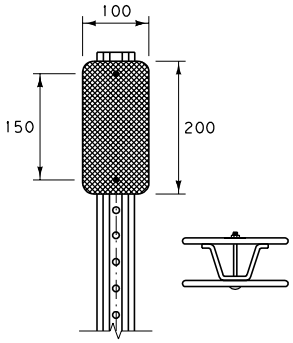

DESIGN D (YELLOW)

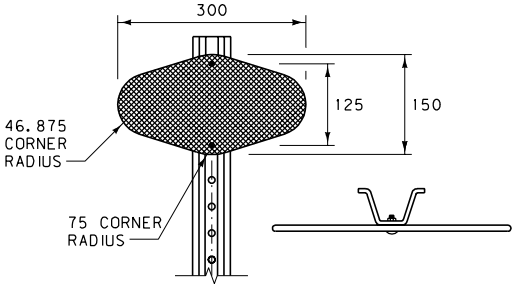

DESIGN E (YELLOW)

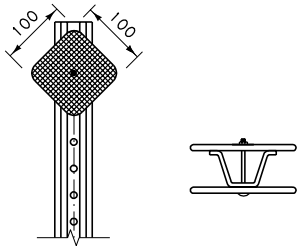

DESIGN F (WHITE)

DELINEATOR LEGEND	
DESIGN "A"	
DESIGN "B"	
DESIGN "C"	
DESIGN "D"	
DESIGN "E"	
DESIGN "F"	
DESIGN "G"	
DESIGN "H"	
DESIGN "J"	

NOTE:
SOME TYPICAL USES ARE SHOWN FOR EACH DESIGN. REFER TO THE MUTCD FOR SPECIFIC GUIDANCE.

ALL DIMENSIONS ARE MILLIMETERS (mm) UNLESS OTHERWISE NOTED.

DETAILED DRAWING

REFERENCE
STANDARD SPEC.
SECTION 619

DWG. NO.
619-34

DELINEATOR DETAILS

EFFECTIVE: FEBRUARY 2005

serving you with pride

MONTANA DEPARTMENT OF TRANSPORTATION

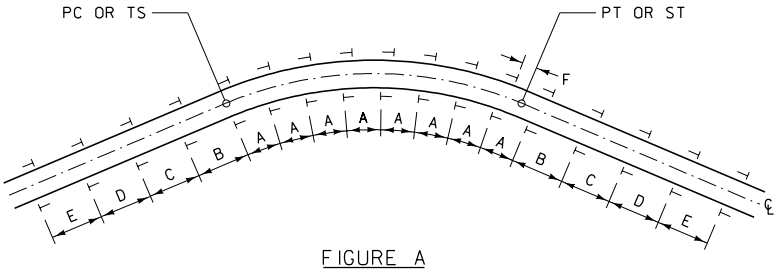

FIGURE A

SEE TABLE BELOW FOR SPACING VALUES

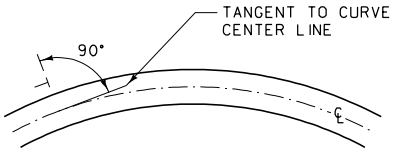

FIGURE B

HORIZONTAL CURVE SPACING TABLE					
RADIUS, m	SPACING ON CURVE, m	SPACING ON BOTH APPROACH TANGENTS, m			
	A	B	C	D	E
1750 & UP	90	120	120	120	120
900 - 1749	65	120	120	120	120
600 - 899	50	95	120	120	120
450 - 599	40	75	120	120	120
300 - 449	35	65	100	120	120
200 - 299	25	55	80	120	120
150 - 199	20	45	70	90	120
100 - 149	20	35	55	90	120
0 - 99	15	25	40	80	120

NOTES:

FURNISH RETRO-REFLECTIVE SHEETING ACCORDING TO THE STANDARD SPECIFICATIONS FOR RETRO-REFLECTIVE SHEETING B (HIGH INTENSITY). POSITION DELINEATOR FACES PERPENDICULAR TO TANGENT TO CENTERLINE OF CURVE AS SHOWN IN FIGURE B.

MOUNT DELINEATORS ON METAL U-POSTS (MIN. 1.7 kg/m) WITH 5 mm DIA. CADMIUM PLATED BOLT(S). DRILL OR PUNCH A MINIMUM OF TWELVE 9.5 mm MAXIMUM DIAMETER HOLES ON 25 mm CENTERS FROM THE TOP OF THE POST. 6.4 mm SQUARE HOLES MAY BE USED. IF SQUARE HOLES ARE USED, USE A LARGE HEADED BOLT OR AN APPROPRIATE WASHER. JAM THREADS AFTER TIGHTENING THE NUT TO PREVENT REMOVAL.

PLACE DELINEATORS AT A CONSTANT CLEARANCE DISTANCE FROM THE EDGE OF THE PAVEMENT EXCEPT WHERE GUARDRAIL OR OTHER OBSTRUCTIONS INTERFERE. ALIGN THE DELINEATORS WITH THE INSIDE EDGE OF THE OBSTRUCTION. CLEARANCE FOR DELINEATORS IS 1.8 m ON INTERSTATE HIGHWAYS, 0.6 m TO 1.8 m ON PRIMARY AND SECONDARY HIGHWAYS OR AS DETERMINED BY THE ENGINEER. THE STANDARD MOUNTING HEIGHT IS 1.2 m TO THE TOP OF THE POST. SUPPLY POST LENGTHS TO MAINTAIN THE PROPER MOUNTING HEIGHT AND A MINIMUM OF 0.45 m EMBEDMENT.

SPACE DELINEATORS ACCORDING TO THE DISTANCES FOUND IN THE TABLE ABOVE OR AS SPECIFIED IN THE PLANS. IN FIGURE A, IF "F" IS GREATER THAN 6 m ADD ONE REGULAR DELINEATOR IN AT "A" SPACING. UNDER NORMAL SPACING, SHOULD A DELINEATOR FALL WITHIN A CROSSROAD OR APPROACH, IT MAY BE MOVED IN EITHER DIRECTION A DISTANCE NOT TO EXCEED ONE QUARTER OF THE NORMAL SPACING. ELIMINATE DELINEATORS STILL FALLING IN SUCH AREAS.

ALL DELINEATOR REFLECTORS HAVE 18.75 mm CORNER RADII EXCEPT DESIGN "E".

MOUNT THE DELINEATOR REFLECTOR 25 mm BELOW THE TOP OF THE METAL U-POST.

WHEN THE ROADWAY ADT IS LESS THAN 900, DELINEATE ALL CURVES WITH 450 METER RADII OR LESS.

CONTINUOUSLY DELINEATE ROADWAYS WHEN THE ADT IS 900 AND GREATER, OR BY ENGINEERING JUDGEMENT.

ALL DIMENSIONS ARE MILLIMETERS (mm) UNLESS OTHERWISE NOTED.

DETAILED DRAWING

REFERENCE
STANDARD SPEC.
SECTION 619, 704

DWG. NO.
619-36

DELINEATOR PLACEMENT DETAILS

EFFECTIVE: FEBRUARY 2005

serving you with pride

MONTANA DEPARTMENT OF TRANSPORTATION

TYPE 1
X3-2

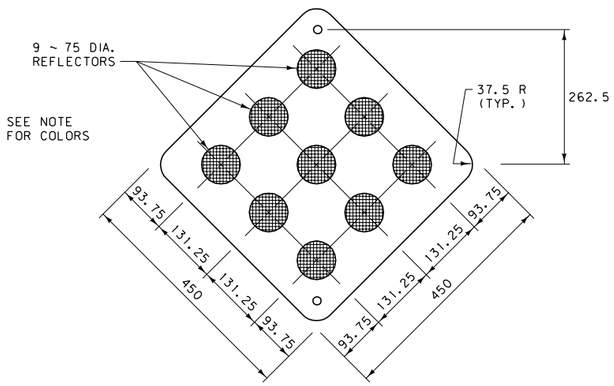

NOTE:
TYPE 1 OBJECT MARKERS HAVE YELLOW REFLECTORS ON A YELLOW OR BLACK BACKGROUND OR AN ALL YELLOW RETRO-REFLECTORIZED PANEL OF THE SAME SIZE. IF USED AS END OF ROAD MARKERS, TYPE 1 MARKERS ARE RETRO-REFLECTORIZED RED OR HAVE RED REFLECTORS ON A RED OR BLACK BACKGROUND.

TYPE 2
X3-3

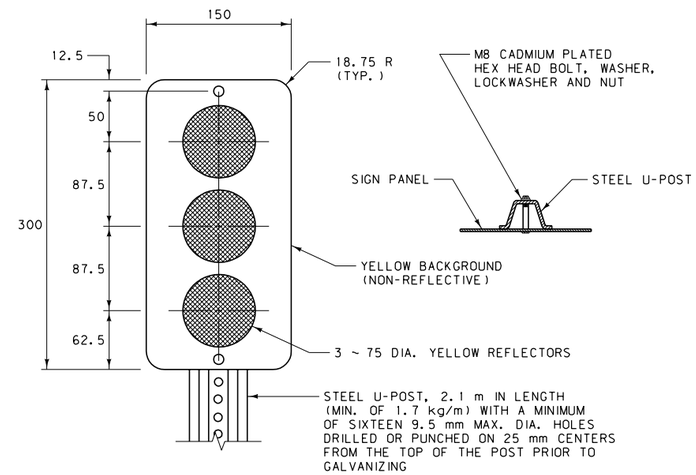

ALTERNATE DESIGN FOR TYPE 2 OBJECT MARKERS IS A YELLOW RETRO-REFLECTORIZED PANEL OF THE SAME SIZE.

TYPE 3
OM-3
(OM-3L SHOWN)

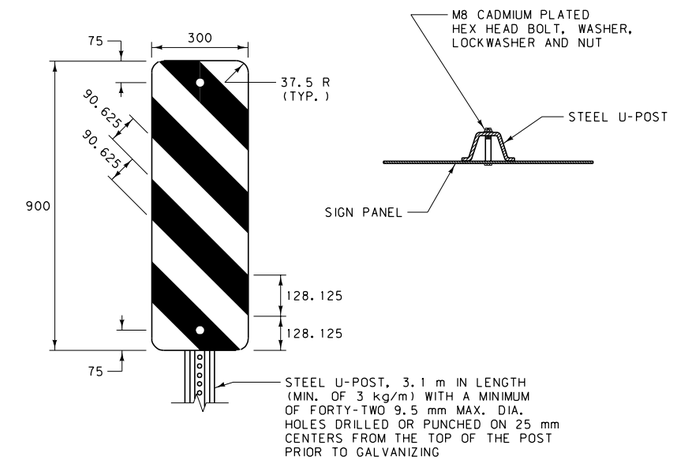

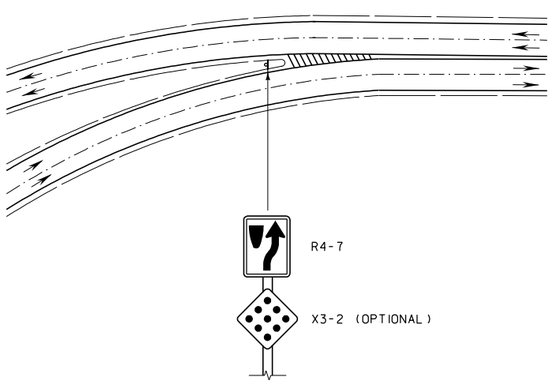

TYPICAL USE AND PLACEMENT

PLACEMENT OF X3-2 IS USED ONLY AS OPTIONAL TO ENHANCE TARGET VALUE WHEN NEEDED.

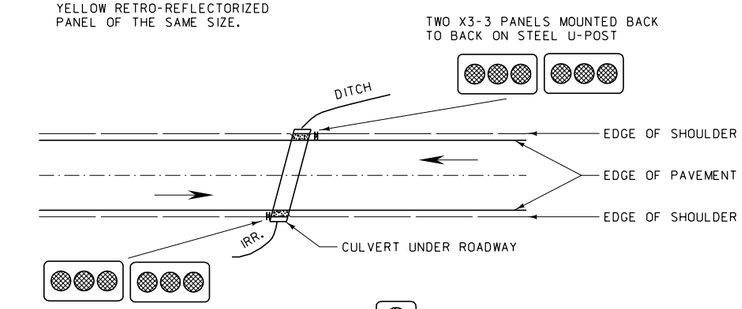

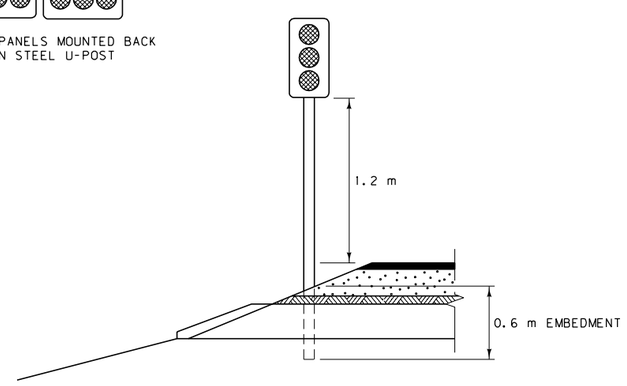

PLACE POST AND PANEL(S) SO THAT PANEL(S) ARE DIRECTLY ADJACENT TO INNER-MOST EDGE OF OBJECT NEAREST TRAVELED WAY.

TYPICAL USE AND PLACEMENT

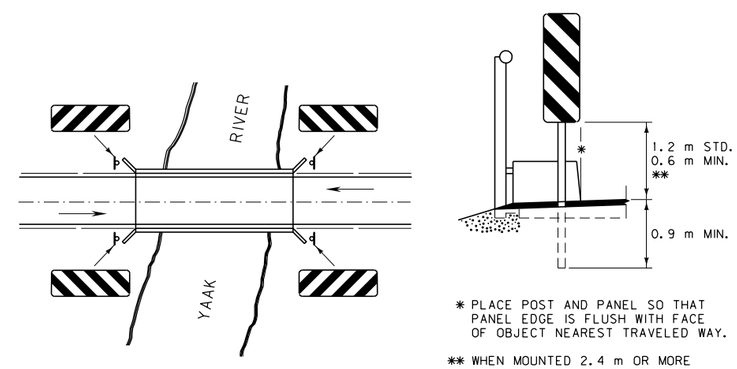

* PLACE POST AND PANEL SO THAT PANEL EDGE IS FLUSH WITH FACE OF OBJECT NEAREST TRAVELED WAY.

** WHEN MOUNTED 2.4 m OR MORE FROM CURB OR SHOULDER, THE MOUNTING HEIGHT IS MEASURED FROM THE GROUND LINE INSTEAD OF THE EDGE OF PAVEMENT.

TYPICAL USE AND PLACEMENT

ALL DIMENSIONS ARE MILLIMETERS (mm) UNLESS OTHERWISE NOTED.

DETAILED DRAWING	
REFERENCE STANDARD SPEC. SECTION 619	DWG. NO. 619-38
OBJECT MARKER DESIGN AND PLACEMENT DETAILS FOR OBSTRUCTIONS ADJACENT TO OR WITHIN HIGHWAYS	
EFFECTIVE: FEBRUARY 2005	
serving you with pride	*MONTANA DEPARTMENT OF TRANSPORTATION*

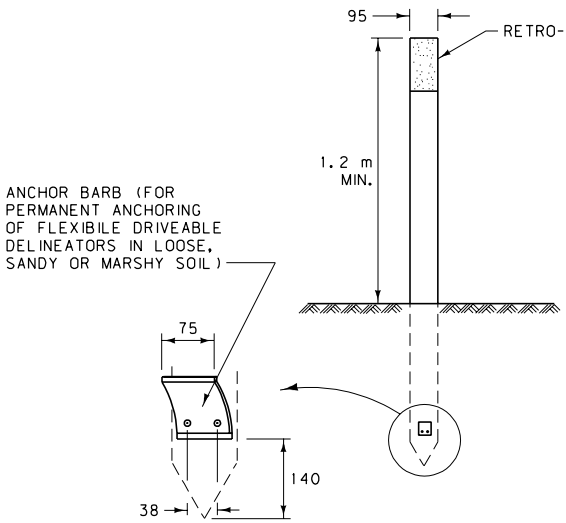

FLEXIBLE DRIVEABLE
DELINEATORS

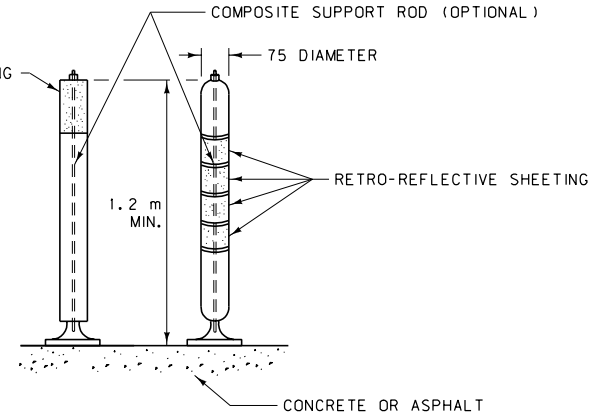

DETAILS ARE REPRESENTATIVE ONLY. ACTUAL DESIGN USED/SPECIFIED MAY VARY (SEE PLANS).

FLEXIBLE SURFACE-MOUNTED
DELINEATORS

NOTES:

USE FLEXIBLE DELINEATORS SIMILAR TO THE DESIGN AND SPECIFICATIONS SHOWN ON THIS SHEET OR IN THE SIGNING PLANS OF THE CONTRACT.

MOUNT OR EMBED FLEXIBLE DELINEATORS TO THE MANUFACTURER'S SPECIFICATIONS.

RETRO-REFLECTORIZE FLEXIBLE DELINEATORS, IF REQUIRED IN PLAN SPECIFICATIONS, BY THE ADDITION OF DELINEATOR CRYSTALS, EITHER 37.5 mm x 175 mm OR 75 mm DIAMETER, OR BY ADDING TWO 75 mm MINIMUM WIDTH BANDS OF RETRO-REFLECTIVE SHEETING TYPE HI, 360° AROUND THE TOP OF THE DELINEATOR. USE THE COLOR OF THE DELINEATOR CRYSTALS OR RETRO-REFLECTORIZED MATERIAL AS SHOWN IN THE SIGNING PLANS OF THE CONTRACT OR THE MUTCD.

THE EXACT LOCATION AND PLACEMENT OF THE FLEXIBLE DELINEATORS ARE SHOWN IN THE SIGNING PLANS.

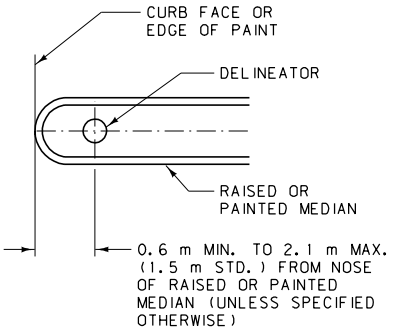

TYPICAL USE AND PLACEMENT

ALL DIMENSIONS ARE MILLIMETERS (mm) UNLESS OTHERWISE NOTED.

DETAILED DRAWING	
REFERENCE STANDARD SPEC. SECTION 619	DWG. NO. 619-40
FLEXIBLE DELINEATORS	
EFFECTIVE: FEBRUARY 2005	
serving you with pride	MONTANA DEPARTMENT OF TRANSPORTATION

BI BARRICADE

B(I)-L SHOWN

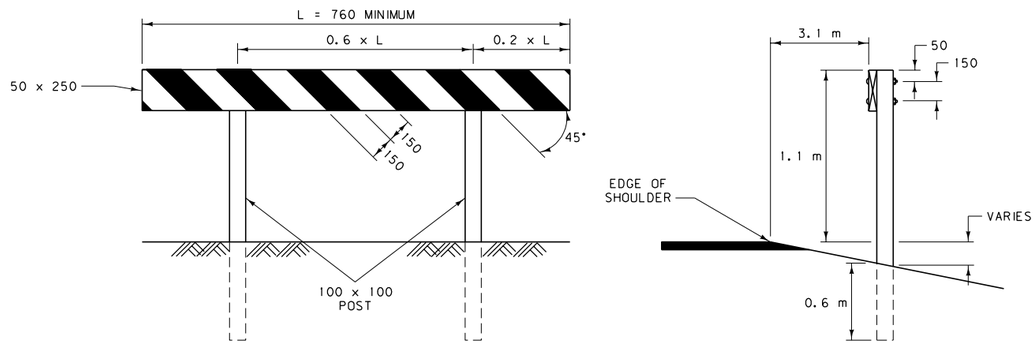

FRONT VIEW

RIGHT
SIDE VIEW

BARRICADE DETAILS

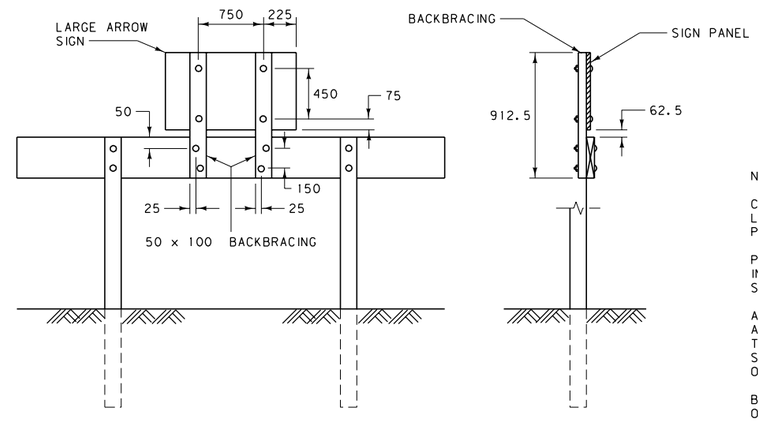

REAR VIEW

LEFT
SIDE VIEW

SIGN MOUNTING DETAILS

NOTES:

CONSTRUCT ALL BARRICADES OF COMMERCIAL GRADE S4S LUMBER. USE M10 GALVANIZED CARRIAGE OR CADMIUM PLATED BOLTS, WASHERS AND NUTS FOR ALL CONNECTIONS.

PAINT ALL BARRICADES WITH TWO COATS OF WHITE PAINT IN ACCORDANCE WITH SECTION 710 OF THE STANDARD SPECIFICATIONS.

ALL BARRICADES HAVE ALTERNATING RETRO-REFLECTIVE RED AND WHITE STRIPES, 150 mm IN WIDTH AT AN ANGLE OF 45° TO THE VERTICAL, SLANTING DOWNWARD TOWARD THE SIDE OR SIDES ON WHICH TRAFFIC IS TO FLOW. NOMINAL DIMENSIONS OF ROLL MATERIAL FOR STRIPES IS ACCEPTABLE.

BARRICADES DESIGNATED "L" ARE PLACED ON THE LEFT SIDE OF APPROACHING TRAFFIC. BARRICADES DESIGNATED "R" ARE PLACED ON THE RIGHT SIDE OF APPROACHING TRAFFIC.

RETRO-REFLECTORIZE ALL BARRICADES WITH THE SHEETING MOUNTED ON A SHEET ALUMINUM BACKING AT LEAST 0.5 mm THICK. USE ALUMINUM ALLOY 6061-T6 OR AA5052-H38 CONFORMING TO ASTM DESIGNATION B 209M. SECURE RETRO-REFLECTIVE ALUMINUM SHEETING WITH ALUMINUM NAILS.

DETERMINE THE POST LENGTHS IN THE FIELD, COMPLYING WITH THE MOUNTING HEIGHTS AND FOUNDATION DEPTHS LISTED ON THIS SHEET.

BIII BARRICADE

B(III)-L & R SHOWN

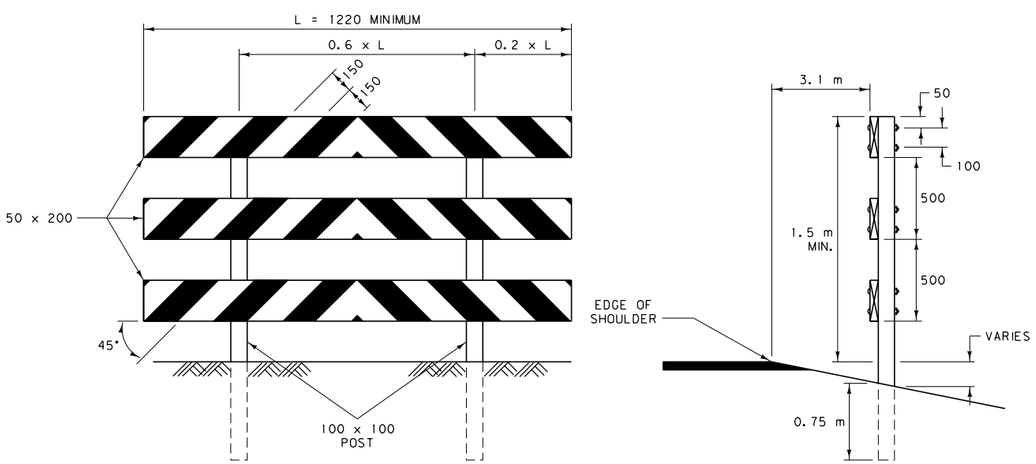

FRONT VIEW

RIGHT
SIDE VIEW

BARRICADE DETAILS

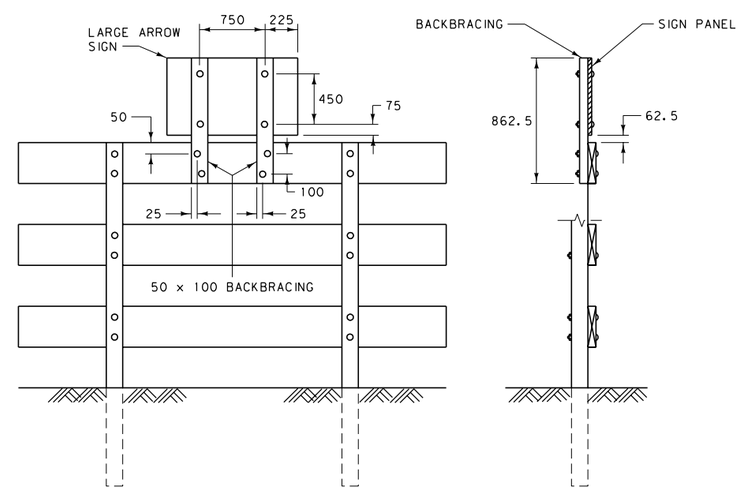

REAR VIEW

LEFT
SIDE VIEW

SIGN MOUNTING DETAILS

ALL DIMENSIONS ARE MILLIMETERS (mm) UNLESS OTHERWISE NOTED.

DETAILED DRAWING	
REFERENCE STANDARD SPEC. SECTION 619	DWG. NO. 619-42
PERMANENT BARRICADE DESIGN DETAILS	
EFFECTIVE: FEBRUARY 2005	
serving you with pride	MONTANA DEPARTMENT OF TRANSPORTATION

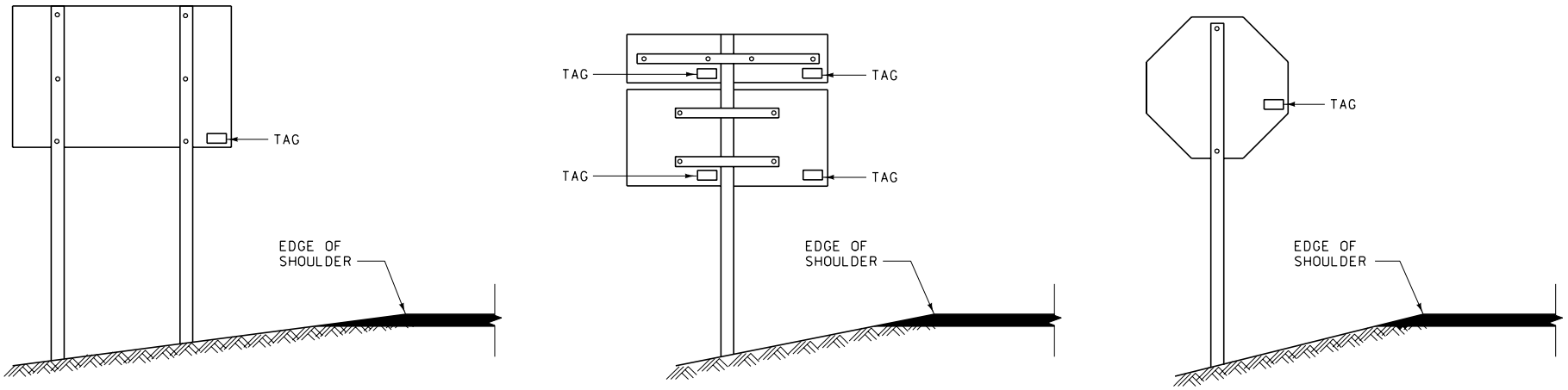

PLACEMENT DETAILS

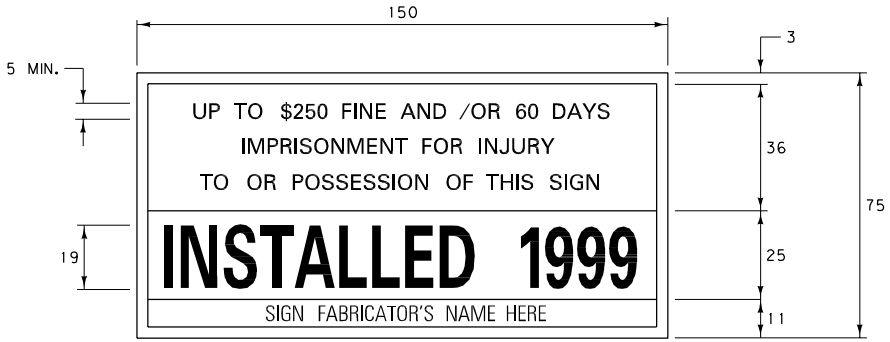

DATE TAG DETAIL

NOTES:

FURNISH AND PLACE INSTALLATION DATE TAGS ON ALL SIGNS PRIOR TO FINAL ACCEPTANCE OF THE PROJECT.

THE TAGS DISPLAY THE YEARS IN WHICH THE SIGNS WERE INSTALLED. SEE THE COLOR SEQUENCE TABLE SHOWN ON THIS DRAWING FOR THE APPROPRIATE COLORS. DATE TAGS ARE TO BE RETRO-REFLECTIVE.

PLACE A TAG ON THE BACK OF EACH SIGN, LOCATED NEAR THE LOWER CORNER OF THE SIGN NEAREST THE EDGE OF ROADWAY, TO BE VISIBLE FROM THE ROADWAY AS SHOWN IN THE EXAMPLES ABOVE.

PLACE TAGS ON ANY NEW SIGN INSTALLED IN THE FIELD AS ROUTINE MAINTENANCE BY MDT FORCES. MAINTENANCE DESIGN DATE TAGS CAN BE ORDERED FROM THE SIGN SHOP IN HELENA.

DATE TAG COLOR SEQUENCE

DATE TAG COLOR CORRESPONDS TO THE LAST DIGIT OF THE INSTALLATION YEAR AS FOLLOWS:

0 - YELLOW	5 - RED
1 - WHITE	6 - PURPLE
2 - LIGHT BLUE	7 - ORANGE
3 - GOLD	8 - BLUE
4 - LIGHT GREEN	9 - GREEN

ALL DIMENSIONS ARE MILLIMETERS (mm) UNLESS OTHERWISE NOTED.

DETAILED DRAWING

REFERENCE
STANDARD SPEC.
SECTION 619

DWG. NO.
619-44

INSTALLATION
DATE TAGS

EFFECTIVE: FEBRUARY 2005

MDT serving you with pride

MONTANA DEPARTMENT OF TRANSPORTATION

QUANTITIES			
LETTER	AREA m²	PAINT (liters)	EPOXY (liters)
A	0.52	0.20	0.26
B	0.68	0.26	0.35
C	0.47	0.18	0.24
D	0.60	0.23	0.30
E	0.61	0.23	0.31
F	0.45	0.17	0.23
G	0.54	0.21	0.27
H	0.58	0.22	0.29
I	0.25	0.10	0.13
J	0.35	0.13	0.18
K	0.59	0.22	0.30
L	0.37	0.14	0.19
M	0.71	0.27	0.36
N	0.66	0.25	0.34
O	0.57	0.22	0.29
P	0.51	0.19	0.26
Q	0.58	0.22	0.29
R	0.60	0.23	0.30
S	0.60	0.23	0.30
T	0.37	0.14	0.19
U	0.53	0.20	0.27
V	0.46	0.18	0.23
W	0.66	0.25	0.34
X	0.45	0.17	0.23
Y	0.38	0.14	0.19
Z	0.49	0.19	0.25

NOTES:

EACH SQUARE EQUALS 100 mm.

ALL PAVEMENT MARKINGS ARE TO CONFORM TO THE REQUIREMENTS OF THE "MANUAL ON UNIFORM TRAFFIC CONTROL DEVICES" AND "STANDARD HIGHWAY SIGNS" PUBLICATIONS, FROM THE FEDERAL HIGHWAY ADMINISTRATION.

ALL LETTERS ARE TO BE WHITE.

USE THE SIZES OF LETTERS SHOWN UNLESS SMALLER OR LARGER SIZES ARE NEEDED. THE SIZE OF LETTERS MAY BE SCALED PROPORTIONATELY DOWN BY APPROXIMATELY ONE-THIRD FOR LOW-SPEED, URBAN CONDITIONS. THE MINIMUM HEIGHT OF ANY LETTER IS 1.8 m. LARGER SIZES MAY BE USED FOR ABOVE AVERAGE SPEEDS AND OTHER CRITICAL LOCATIONS.

DO NOT EXCEED MORE THAN ONE LANE IN WIDTH FOR ANY PAVEMENT MARKINGS EXCEPT IN THE CASE OF THE WORD "SCHOOL". SEE DTL. DWG. NO. 620-10 FOR MORE INFORMATION.

FOR MULTIPLE LINES OF INFORMATION, PLACE THE INFORMATION SO IT READS IN THE DIRECTION OF TRAVEL. DO NOT EXCEED THREE LINES OF INFORMATION AT ANY LOCATION.

WHEN WORDS AND SYMBOLS ARE USED IN COMBINATION, SPACE THEM AT LEAST FOUR TIMES THE HEIGHT OF CHARACTERS FOR LOW-SPEED ROADS, BUT NOT MORE THAN TEN TIMES THE HEIGHT OF THE CHARACTERS UNDER ANY CONDITION.

ON NARROW, LOW-SPEED BICYCLE PATHS, SIZES OF LETTERS MAY BE SMALLER THAN SUGGESTED, BUT TO THE RELATIVE SCALE.

QUANTITIES ARE BASED ON THE SIZES OF PAVEMENT MARKINGS SHOWN AND ARE FOR ESTIMATING PURPOSES ONLY.

PAINT VOLUMES ASSUME A 0.381 mm THICKNESS.
EPOXY VOLUMES ASSUME A 0.508 mm THICKNESS.

ALL DIMENSIONS ARE MILLIMETERS (mm) UNLESS OTHERWISE NOTED.

DETAILED DRAWING

REFERENCE
STANDARD SPEC.
SECTION 620

DWG. NO.
620-00

PAVEMENT MARKINGS
(LETTERS)

EFFECTIVE: FEBRUARY 2005

MDT serving you with pride — MONTANA DEPARTMENT OF TRANSPORTATION

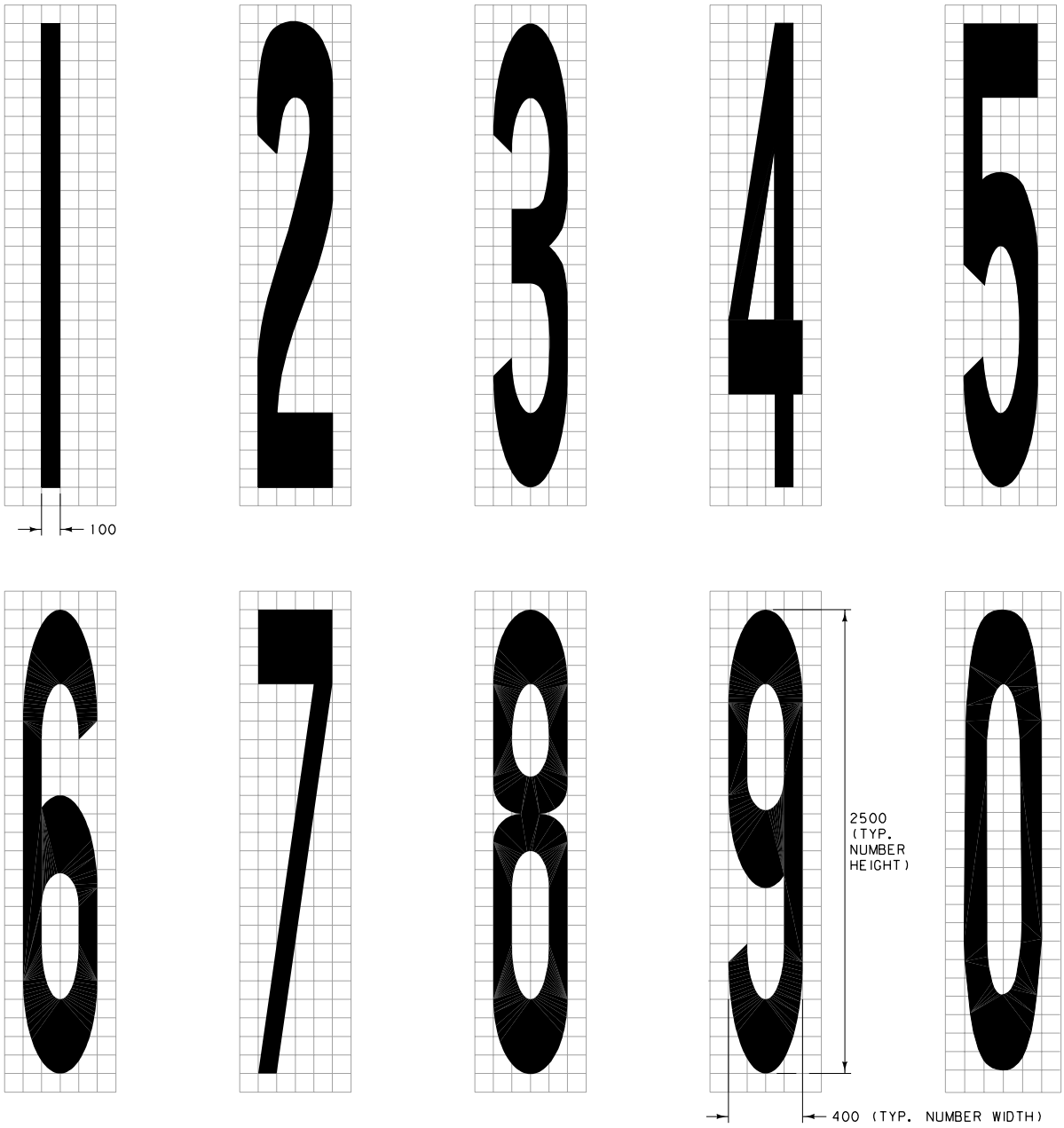

NOTES:

EACH SQUARE EQUALS 100 mm.

ALL PAVEMENT MARKINGS ARE TO CONFORM TO THE REQUIREMENTS OF THE "MANUAL ON UNIFORM TRAFFIC CONTROL DEVICES" AND "STANDARD HIGHWAY SIGNS" PUBLICATIONS, FROM THE FEDERAL HIGHWAY ADMINISTRATION.

ALL NUMBERS ARE TO BE WHITE.

USE THE SIZES OF NUMBERS SHOWN UNLESS SMALLER OR LARGER SIZES ARE NEEDED. THE SIZE OF NUMBERS MAY BE SCALED PROPORTIONATELY DOWN BY APPROXIMATELY ONE-THIRD FOR LOW-SPEED, URBAN CONDITIONS. THE MINIMUM HEIGHT OF ANY NUMBER IS 1.8 m. LARGER SIZES MAY BE USED FOR ABOVE AVERAGE SPEEDS AND OTHER CRITICAL LOCATIONS.

DO NOT EXCEED MORE THAN ONE LANE IN WIDTH FOR ANY PAVEMENT MARKINGS EXCEPT IN THE CASE OF THE WORD "SCHOOL". SEE DTL. DWG. NO. 620-10 FOR MORE INFORMATION.

FOR MULTIPLE LINES OF INFORMATION, PLACE THE INFORMATION SO IT READS IN THE DIRECTION OF TRAVEL. DO NOT EXCEED THREE LINES OF INFORMATION AT ANY LOCATION.

WHEN WORDS AND SYMBOLS ARE USED IN COMBINATION, SPACE THEM AT LEAST FOUR TIMES THE HEIGHT OF CHARACTERS FOR LOW-SPEED ROADS, BUT NOT MORE THAN TEN TIMES THE HEIGHT OF THE CHARACTERS UNDER ANY CONDITION.

ON NARROW, LOW-SPEED BICYCLE PATHS, SIZES OF NUMBERS MAY BE SMALLER THAN SUGGESTED, BUT TO THE RELATIVE SCALE.

QUANTITIES ARE BASED ON THE SIZES OF PAVEMENT MARKINGS SHOWN AND ARE FOR ESTIMATING PURPOSES ONLY.

PAINT VOLUMES ASSUME A 0.381 mm THICKNESS.
EPOXY VOLUMES ASSUME A 0.508 mm THICKNESS.

QUANTITIES

#	AREA m²	PAINT (liters)	EPOXY (liters)
1	0.25	0.10	0.13
2	0.61	0.23	0.31
3	0.54	0.21	0.27
4	0.50	0.19	0.25
5	0.62	0.24	0.31
6	0.62	0.24	0.31
7	0.37	0.14	0.19
8	0.70	0.27	0.36
9	0.62	0.24	0.31
0	0.62	0.24	0.31

ALL DIMENSIONS ARE MILLIMETERS (mm) UNLESS OTHERWISE NOTED.

DETAILED DRAWING

REFERENCE
STANDARD SPEC.
SECTION 620

DWG. NO.
620-05

PAVEMENT MARKINGS
(NUMBERS)

EFFECTIVE: FEBRUARY 2005

serving you with pride

MONTANA DEPARTMENT OF TRANSPORTATION

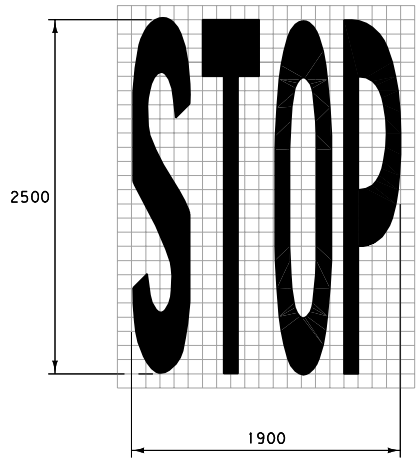

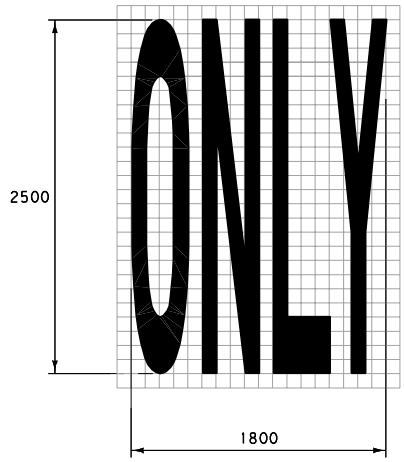

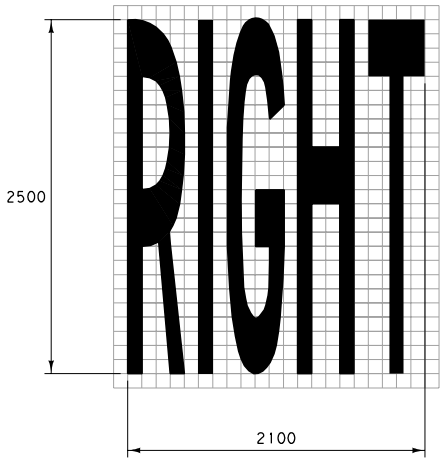

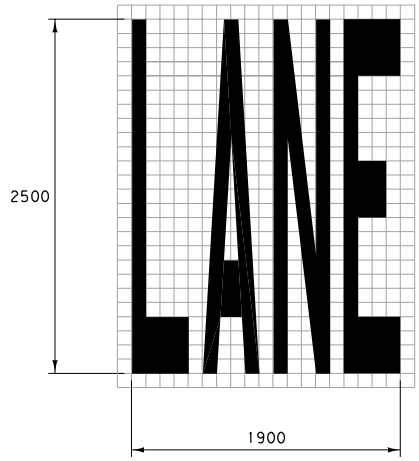

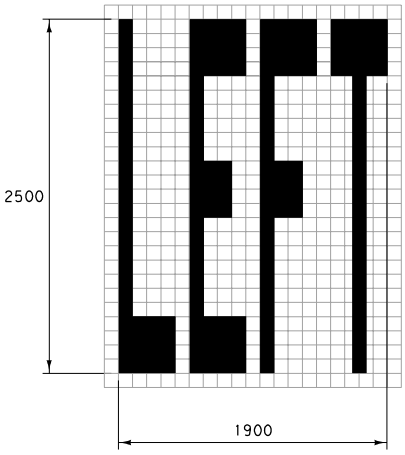

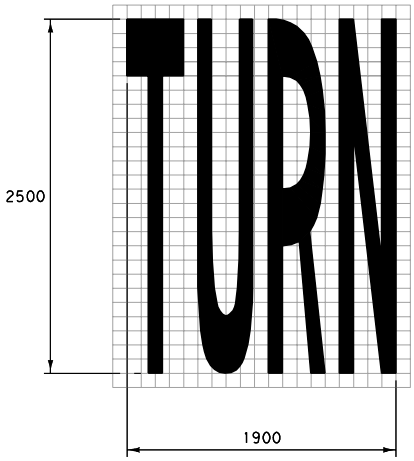

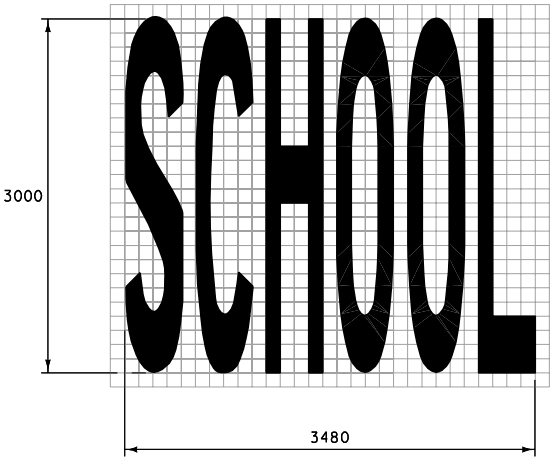

EACH SQUARE EQUALS 120 mm

NOTES:

UNLESS OTHERWISE NOTED EACH SQUARE EQUALS 100 mm.

ALL PAVEMENT MARKINGS ARE TO CONFORM TO THE REQUIREMENTS OF THE "MANUAL ON UNIFORM TRAFFIC CONTROL DEVICES" AND "STANDARD HIGHWAY SIGNS" PUBLICATIONS, FROM THE FEDERAL HIGHWAY ADMINISTRATION.

ALL WORDS ARE TO BE WHITE.

USE THE SIZES OF WORDS SHOWN UNLESS SMALLER OR LARGER SIZES ARE NEEDED. THE SIZE OF WORDS MAY BE SCALED PROPORTIONATELY DOWN BY APPROXIMATELY ONE-THIRD FOR LOW-SPEED, URBAN CONDITIONS. THE MINIMUM HEIGHT OF ANY WORD IS 1.8 m. LARGER SIZES MAY BE USED FOR ABOVE AVERAGE SPEEDS AND OTHER CRITICAL LOCATIONS.

DO NOT EXCEED MORE THAN ONE LANE IN WIDTH FOR ANY PAVEMENT MARKINGS, EXCEPT IN THE CASE OF THE WORD "SCHOOL". WHEN "SCHOOL" IS EXTENDED TO THE WIDTH OF TWO LANES, SCALE THE WORD UP PROPORTIONATELY TO FIT THE APPLICATION WIDTH.

FOR MULTIPLE LINES OF INFORMATION, PLACE THE INFORMATION SO IT READS IN THE DIRECTION OF TRAVEL. DO NOT EXCEED THREE LINES OF INFORMATION AT ANY LOCATION.

WHEN WORDS AND SYMBOLS ARE USED IN COMBINATION, SPACE THEM AT LEAST FOUR TIMES THE HEIGHT OF CHARACTERS FOR LOW-SPEED ROADS, BUT NOT MORE THAN TEN TIMES THE HEIGHT OF THE CHARACTERS UNDER ANY CONDITION.

ON NARROW, LOW-SPEED BICYCLE PATHS, SIZES OF LETTERS MAY BE SMALLER THAN SUGGESTED, BUT TO THE RELATIVE SCALE.

QUANTITIES ARE BASED ON THE SIZES OF PAVEMENT MARKINGS SHOWN AND ARE FOR ESTIMATING PURPOSES ONLY.

PAINT VOLUMES ASSUME A 0.381 mm THICKNESS.
EPOXY VOLUMES ASSUME A 0.508 mm THICKNESS.

QUANTITIES

WORD	AREA m²	PAINT (liters)	EPOXY (liters)
STOP	2.05	0.78	1.04
ONLY	1.98	0.75	1.01
RIGHT	2.34	0.89	1.19
LANE	2.16	0.82	1.10
LEFT	1.80	0.69	0.91
TURN	2.16	0.82	1.10
SCHOOL	4.54	1.73	2.31

ALL DIMENSIONS ARE MILLIMETERS (mm) UNLESS OTHERWISE NOTED.

DETAILED DRAWING

REFERENCE STANDARD SPEC. SECTION 620

DWG. NO. 620-10

PAVEMENT MARKINGS (WORDS)

EFFECTIVE: FEBRUARY 2005

MDT serving you with pride — MONTANA DEPARTMENT OF TRANSPORTATION

DIRECTIONAL ARROW FOR BIKE LANE

AREA = 0.41 m²
P = 0.16 L
E = 0.21 L
(1 SQUARE = 100 mm)

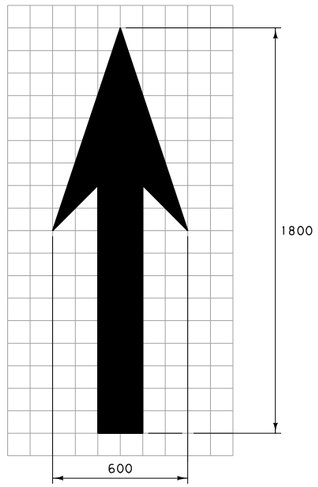

COMBINED ARROW

AREA = 2.54 m²
P = 0.97 L
E = 1.29 L
(1 SQUARE = 100 mm)

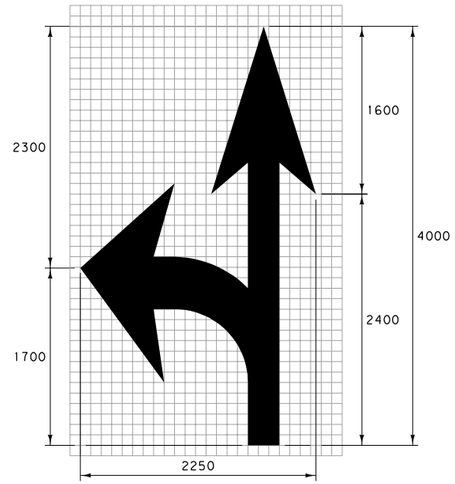

NOTE: REFER TO STRAIGHT & TURN ARROWS FOR MORE DETAIL.

5.5 m LANE DROP ARROW (RIGHT)

(FOR LEFT LANE, USE MIRROR IMAGE)

AREA = 3.83 m²
P = 1.46 L
E = 1.95 L
(1 SQUARE = 200 mm)

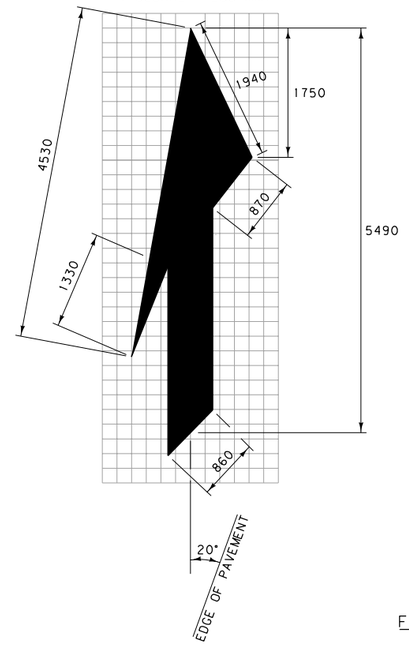

LANE-REDUCTION ARROW

AREA = 3.97 m²
P = 1.51 L
E = 2.02 L
(1 SQUARE = 200 mm)

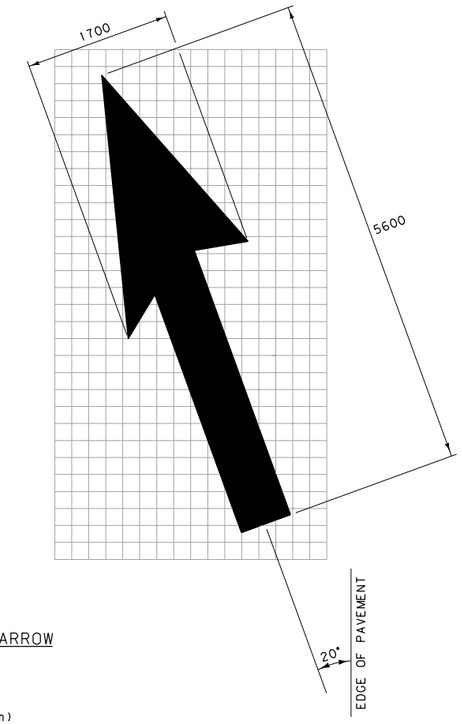

STRAIGHT ARROW

AREA = 1.12 m²
P = 0.43 L
E = 0.57 L
(1 SQUARE = 100 mm)

TURN ARROW

AREA = 1.52 m²
P = 0.58 L
E = 0.77 L
(1 SQUARE = 100 mm)

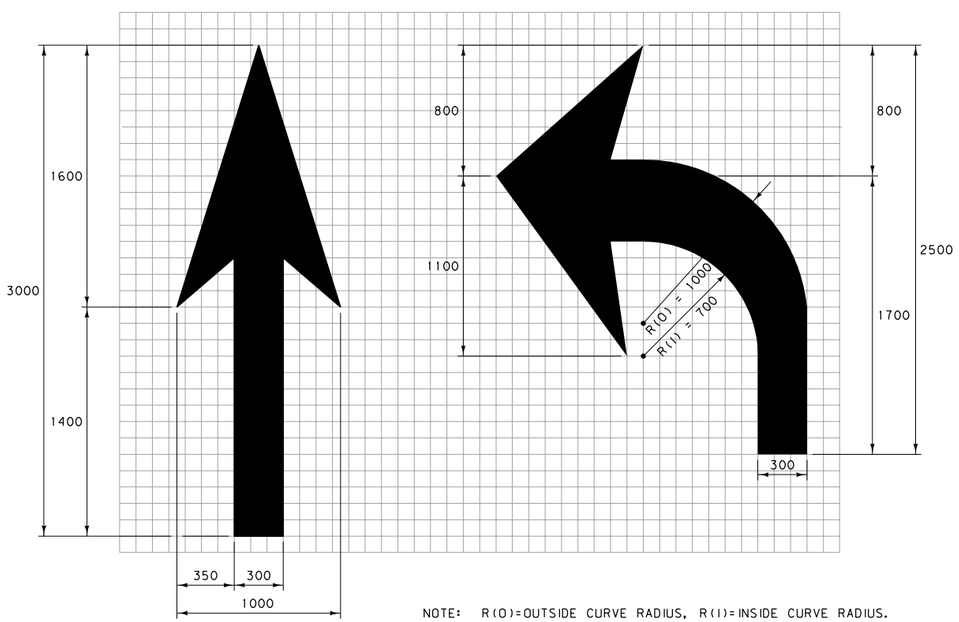

NOTE: R(O)=OUTSIDE CURVE RADIUS, R(I)=INSIDE CURVE RADIUS.

FREEWAY AND RAMP ARROW

AREA = 2.15 m²
P = 0.82 L
E = 1.09 L
(1 SQUARE = 200 mm)

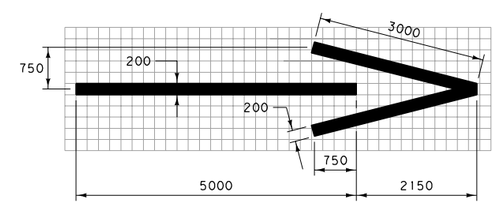

NOTES:

ALL PAVEMENT MARKINGS ARE TO CONFORM TO THE REQUIREMENTS OF THE "MANUAL ON UNIFORM TRAFFIC CONTROL DEVICES" AND "STANDARD HIGHWAY SIGNS" PUBLICATIONS, FROM THE FEDERAL HIGHWAY ADMINISTRATION.

ALL ARROWS ARE TO BE WHITE.

USE THE SIZES OF ARROWS SHOWN UNLESS SMALLER OR LARGER SIZES ARE NEEDED. THE SIZE OF ARROWS MAY BE SCALED PROPORTIONATELY DOWN BY APPROXIMATELY ONE-THIRD FOR LOW-SPEED, URBAN CONDITIONS. LARGER SIZES MAY BE USED FOR ABOVE AVERAGE SPEEDS AND OTHER CRITICAL LOCATIONS.

DO NOT EXCEED MORE THAN ONE LANE IN WIDTH FOR ANY PAVEMENT MARKINGS EXCEPT IN THE CASE OF THE WORD "SCHOOL". SEE DTL. DWG. NO. 620-10 FOR MORE INFORMATION.

WHEN WORDS AND SYMBOLS ARE USED IN COMBINATION, SPACE THEM AT LEAST FOUR TIMES THE HEIGHT OF CHARACTERS FOR LOW-SPEED ROADS, BUT NOT MORE THAN TEN TIMES THE HEIGHT OF THE CHARACTERS UNDER ANY CONDITION.

QUANTITIES ARE BASED ON THE SIZES OF PAVEMENT MARKINGS SHOWN AND ARE FOR ESTIMATING PURPOSES ONLY.

(P) - PAINT VOLUMES ASSUME A 0.381 mm THICKNESS.
(E) - EPOXY VOLUMES ASSUME A 0.508 mm THICKNESS.

ALL DIMENSIONS ARE MILLIMETERS (mm) UNLESS OTHERWISE NOTED.

DETAILED DRAWING	
REFERENCE STANDARD SPEC. SECTION 620	DWG. NO. 620-15
PAVEMENT MARKINGS (ARROWS)	
EFFECTIVE: FEBRUARY 2005	
serving you with pride	MONTANA DEPARTMENT OF TRANSPORTATION

HANDICAPPED SYMBOL

AREA = 0.87 m²
P = 0.33 L
E = 0.44 L
(1 SQUARE = 100 mm)

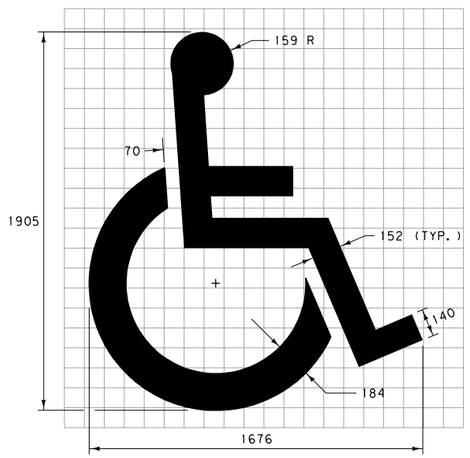

NOTE: CENTER SYMBOL IN PARKING STALL

BIKE LANE SYMBOL

AREA = 0.54 m²
P = 0.21 L
E = 0.27 L
(1 SQUARE = 100 mm)

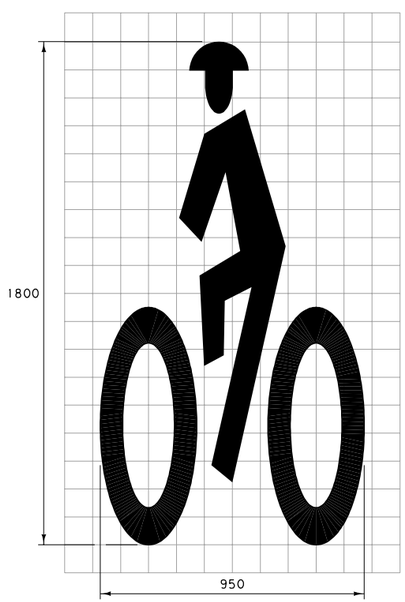

YIELD AHEAD TRIANGLE

(HIGH SPEED)

AREA = 3.33 m²
P = 1.27 L
E = 1.69 L
(1 SQUARE = 100 mm)

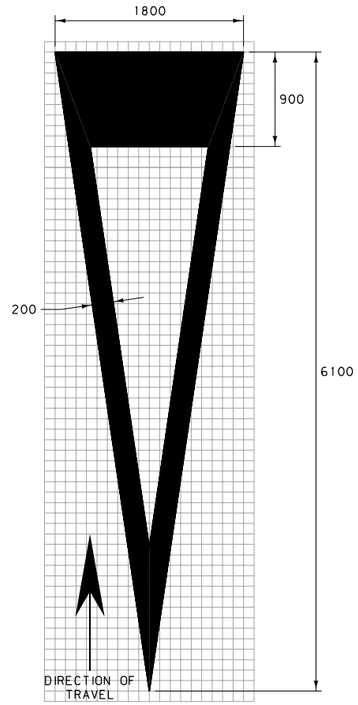

NOTE: FOR LOW SPEED INSTALLATIONS, THE 900 AND 6100 DIMENSIONS MAY BE REDUCED TO 750 AND 4000 RESPECTIVELY.

PREFERENTIAL LANE SYMBOL

AREA = 1.05 m²
P = 0.40 L
E = 0.53 L
(1 SQUARE = 200 mm)

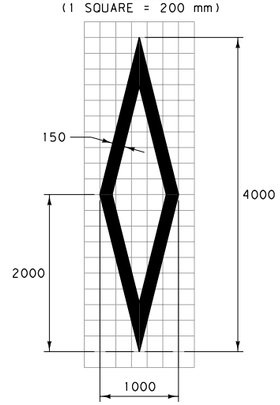

RAILROAD CROSSING SYMBOL

AREA = 5.42 m²
P = 2.07 L
E = 2.75 L
(1 SQUARE = 200 mm)

MAY VARY ACCORDING TO LANE WIDTH

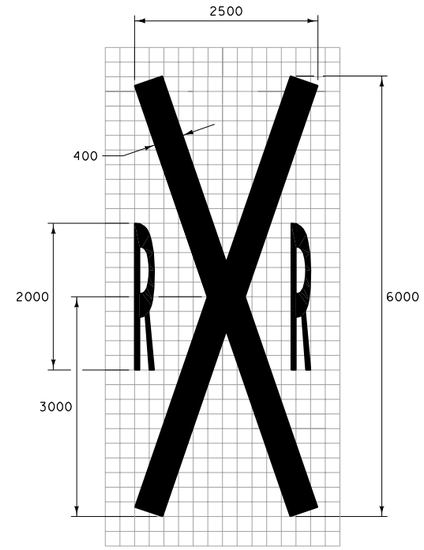

YIELD LINE LAYOUT

(QUANTITIES PER TRIANGLE)

(B = 300)
AREA = 0.07 m²
P = 0.03 L
E = 0.04 L

(B = 600)
AREA = 0.27 m²
P = 0.10 L
E = 0.14 L

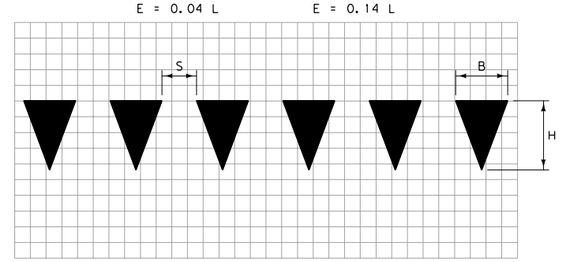

B = 300 to 600
H = 1.5 * B
S = 75 to 300

SPEED HUMP MARKINGS

AREA = 4.56 m²
P = 1.74 L
E = 2.32 L
(1 SQUARE = 100 mm)

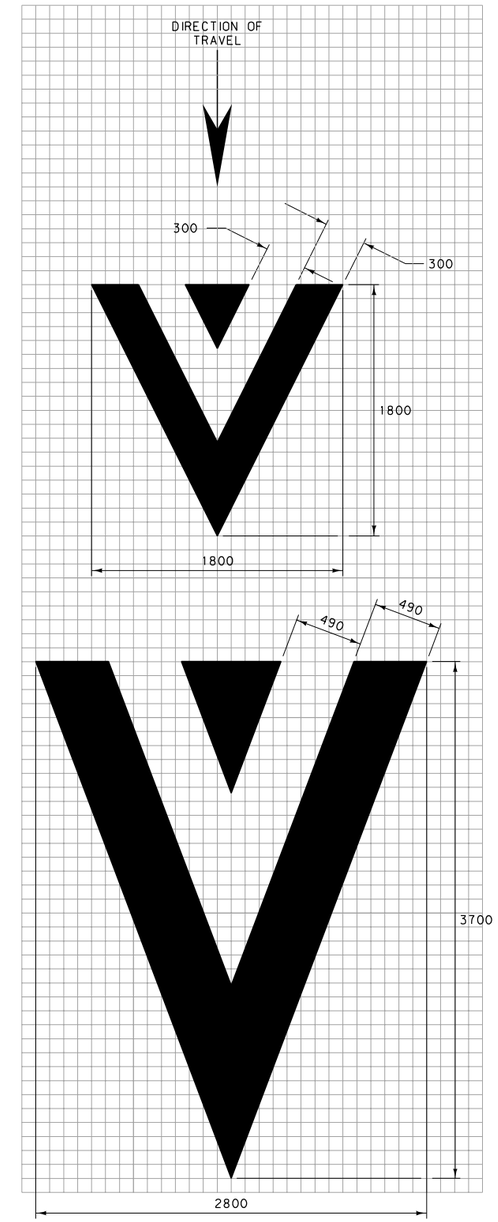

NOTES:

ALL PAVEMENT MARKINGS ARE TO CONFORM TO THE REQUIREMENTS OF THE "MANUAL ON UNIFORM TRAFFIC CONTROL DEVICES" AND "STANDARD HIGHWAY SIGNS" PUBLICATIONS, FROM THE FEDERAL HIGHWAY ADMINISTRATION.

ALL SYMBOLS ARE TO BE WHITE.

DO NOT EXCEED MORE THAN ONE LANE IN WIDTH FOR ANY PAVEMENT MARKINGS, EXCEPT IN THE CASE OF THE WORD "SCHOOL". SEE DTL. DWG. NO. 620-10 FOR MORE INFORMATION.

WHEN WORDS AND SYMBOLS ARE USED IN COMBINATION, SPACE THEM AT LEAST FOUR TIMES THE HEIGHT OF CHARACTERS FOR LOW-SPEED ROADS, BUT NOT MORE THAN TEN TIMES THE HEIGHT OF THE CHARACTERS UNDER ANY CONDITION.

QUANTITIES ARE BASED ON THE SIZES OF PAVEMENT MARKINGS SHOWN AND ARE FOR ESTIMATING PURPOSES ONLY.

(P) - PAINT VOLUMES ASSUME A 0.381 mm THICKNESS.
(E) - EPOXY VOLUMES ASSUME A 0.508 mm THICKNESS.

ALL DIMENSIONS ARE MILLIMETERS (mm) UNLESS OTHERWISE NOTED.

DETAILED DRAWING	
REFERENCE STANDARD SPEC. SECTION 620	DWG. NO. 620-20
PAVEMENT MARKINGS (SYMBOLS)	
EFFECTIVE: FEBRUARY 2005	
serving you with pride	MONTANA DEPARTMENT OF TRANSPORTATION

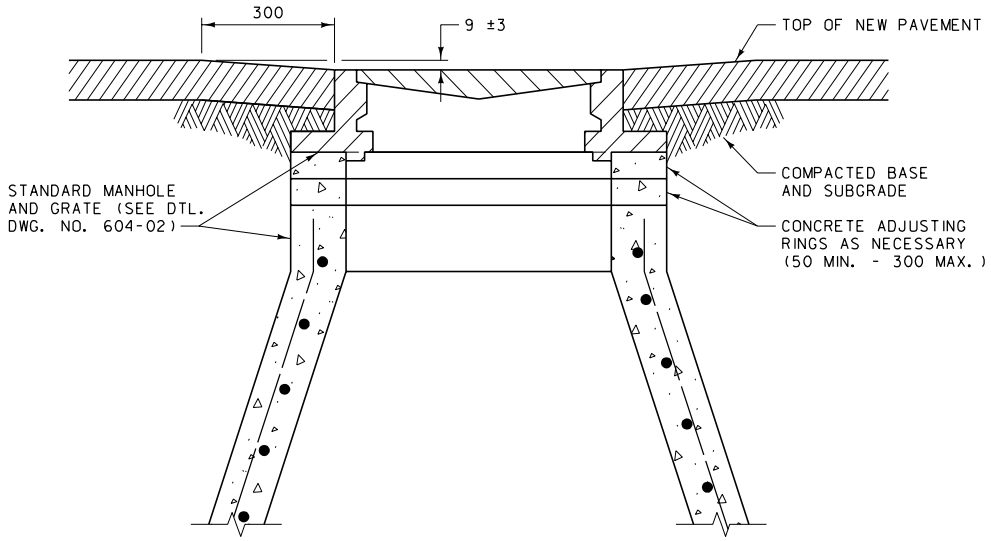

NOTES:

ADJUST MANHOLES UPWARD WITH ADJUSTING RINGS UNDER FRAME.

ADJUST MANHOLES DOWNWARD BY REMOVING CONE AND BARREL SECTIONS AS NECESSARY AND REPLACING WITH SECTIONS OF LENGTH REQUIRED TO MATCH GRADE.

SLOPE MANHOLE FRAME AS REQUIRED TO MATCH SLOPE OF STREET.

MAKE FINAL MANHOLE ADJUSTMENTS BEFORE PAVING.

MANHOLE ADJUSTMENT DETAIL

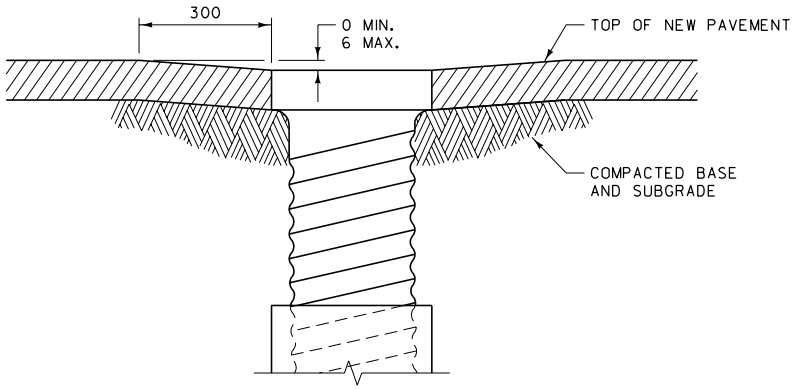

NOTES:

ADJUST WATER VALVES UPWARD OR DOWNWARD AS REQUIRED.

MAKE FINAL ADJUSTMENT BEFORE PAVING.

ALL DIMENSIONS ARE MILLIMETERS (mm) UNLESS OTHERWISE NOTED.

VALVE BOX ADJUSTMENT DETAIL

DETAILED DRAWING	
REFERENCE STANDARD SPEC. SECTION 604, 621	DWG. NO. 621-00
MANHOLE AND VALVE BOX ADJUSTMENT DETAILS	
EFFECTIVE: FEBRUARY 2005	
serving you with pride	MONTANA DEPARTMENT OF TRANSPORTATION

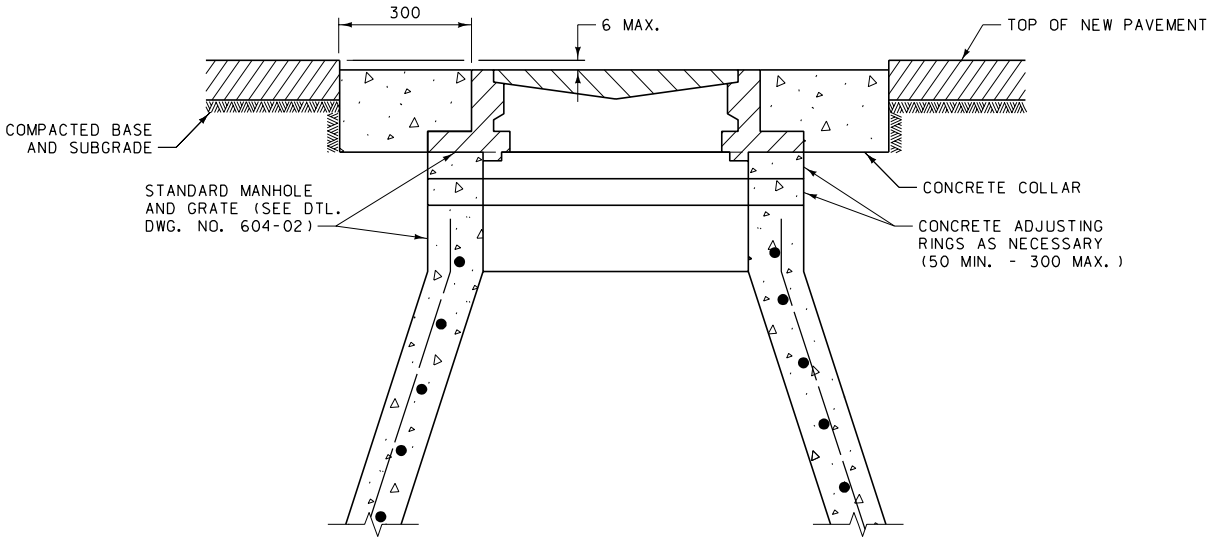

NOTES:

ADJUST MANHOLES UPWARD WITH ADJUSTING RINGS UNDER FRAME.

ADJUST MANHOLES DOWNWARD BY REMOVING CONE AND BARREL SECTIONS AS NECESSARY AND REPLACING WITH SECTIONS OF LENGTH REQUIRED TO MATCH GRADE.

SLOPE MANHOLE FRAME AS REQUIRED TO MATCH SLOPE OF STREET.

MAKE FINAL MANHOLE ADJUSTMENTS BEFORE PAVING.

MANHOLE ADJUSTMENT DETAIL

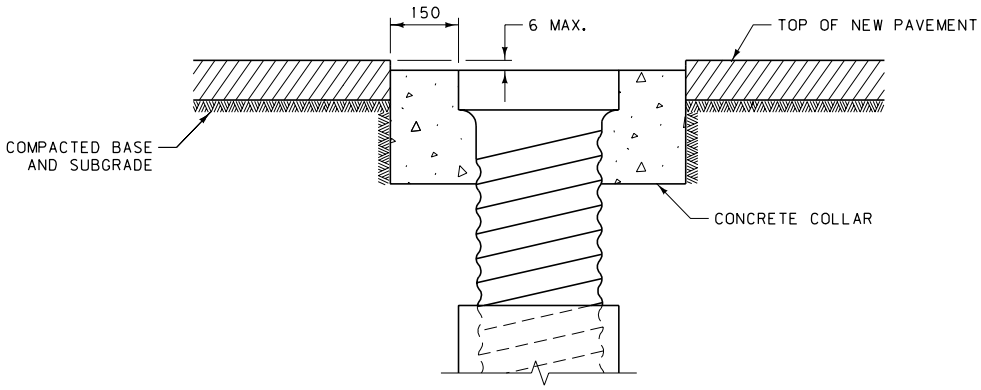

NOTES:

ADJUST WATER VALVES UPWARD OR DOWNWARD AS REQUIRED.

MAKE FINAL ADJUSTMENT BEFORE PAVING.

ALL DIMENSIONS ARE MILLIMETERS (mm) UNLESS OTHERWISE NOTED.

VALVE BOX ADJUSTMENT DETAIL

DETAILED DRAWING	
REFERENCE STANDARD SPEC. SECTION 604, 621	DWG. NO. 621-05
OPTIONAL MANHOLE AND VALVE BOX ADJUSTMENT DETAILS	
EFFECTIVE: FEBRUARY 2005	
serving you with pride	MONTANA DEPARTMENT OF TRANSPORTATION

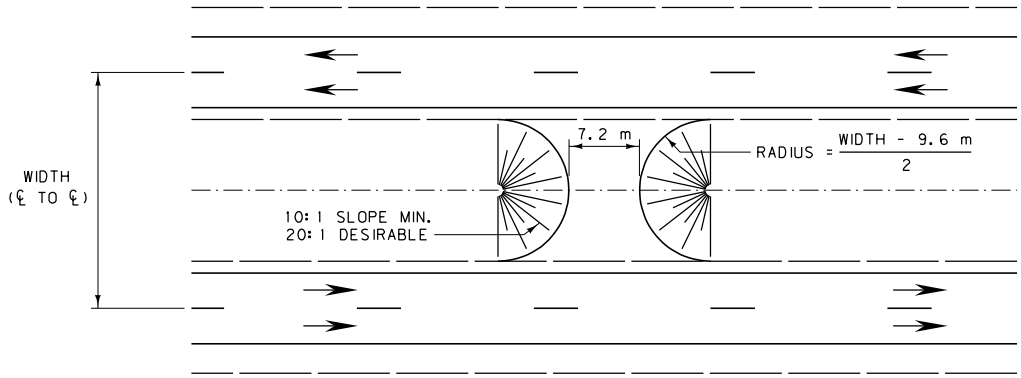

PLAN

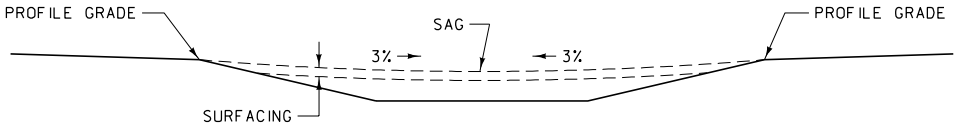

PROFILE

MEDIAN WIDTHS 10.8 m TO 22.8 m

LOCATE AND CONSTRUCT TURNOUTS ABOVE IN CONJUNCTION WITH DITCH BLOCKS IF AT ALL POSSIBLE. PROVIDE DRAINAGE WHEN NECESSARY.

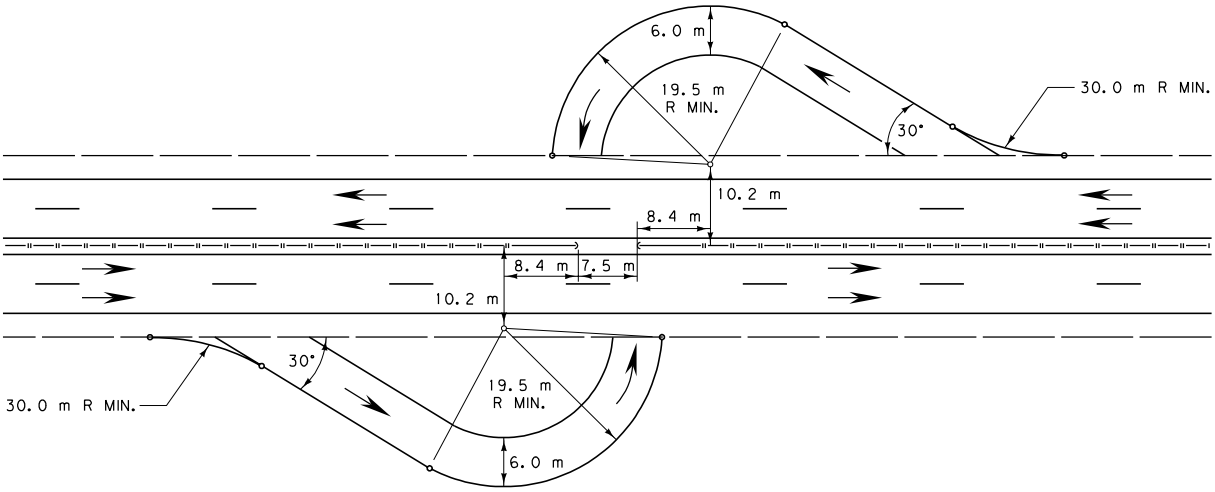

STANDARD U-TURN FOR NARROW MEDIANS

ALL DIMENSIONS ARE MILLIMETERS (mm) UNLESS OTHERWISE NOTED.

NOTES:

NARROW MEDIANS, MEDIAN WIDTHS GREATER THAN 22.8 m, AND INDEPENDENT ROADWAYS REQUIRE SPECIAL DESIGN.

GRADES: UNIFORM BETWEEN INSIDE SHOULDERS OF MAIN TRAVELED WAY EXCEPT FOR SPECIAL DESIGN.
SURFACING: SEE PLANS FOR QUANTITIES.
DRAINAGE: USE 450 mm OR 600 mm CULVERTS IF REQUIRED.

DETAILED DRAWING	
REFERENCE STANDARD SPEC. SECTION	DWG. NO. 900-00
U-TURN MEDIAN OPENINGS ON CONTROLLED ACCESS HIGHWAYS	
EFFECTIVE: FEBRUARY 2005	
serving you with pride	MONTANA DEPARTMENT OF TRANSPORTATION

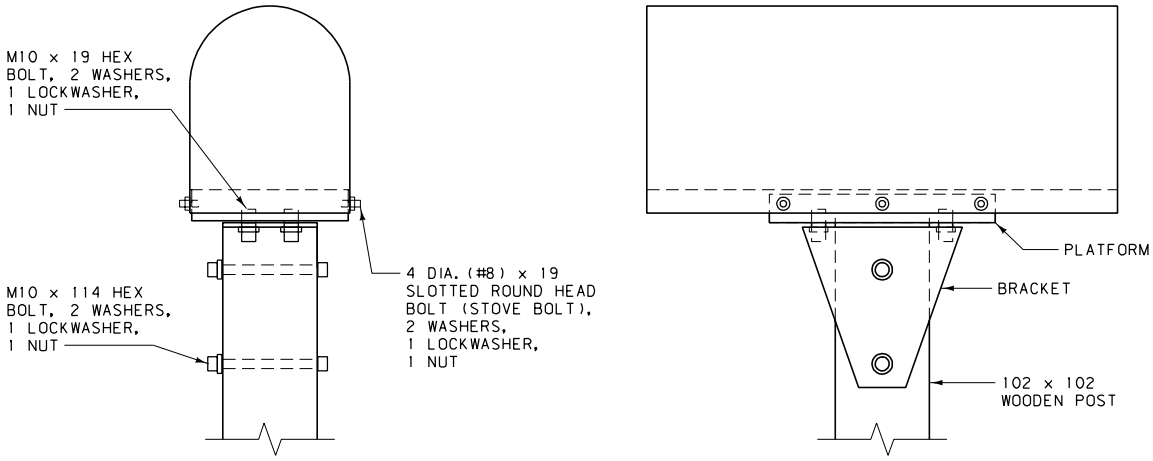

SINGLE MAILBOX ASSEMBLY ✱

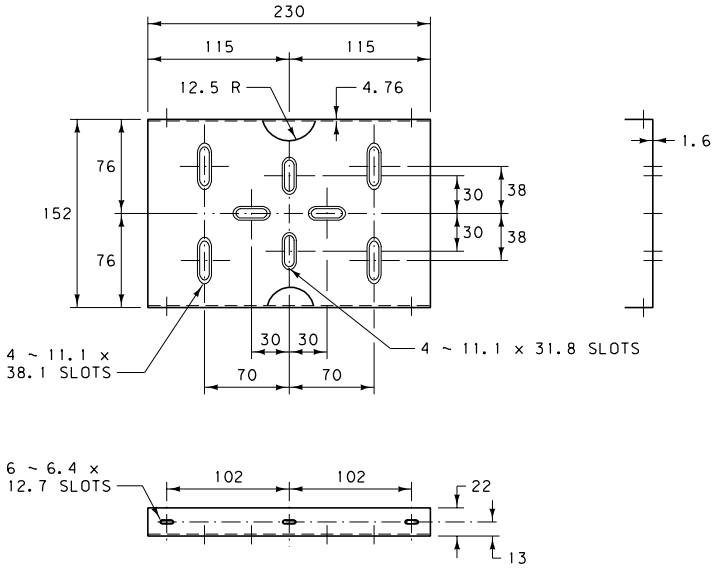

PLATFORM

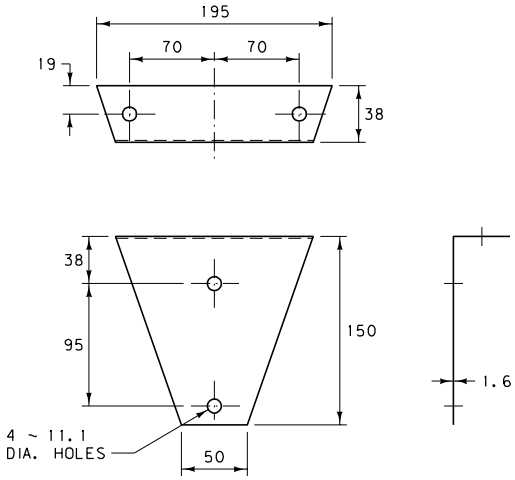

BRACKET

NOTES:

GALVANIZE ALL MATERIALS PER AASHTO M 111.

STAKE MAILBOX LOCATIONS BEFORE INSTALLATION FOR PROPER HEIGHT AND DISTANCE FROM THE ROADWAY. ONCE STAKED, NOTIFY THE ENGINEER AND THE POST OFFICE. THE ENGINEER AND POSTMASTER/MAILCARRIER ARE ALLOWED 48 HOURS TO REVIEW AND MODIFY THE STAKED LOCATIONS PRIOR TO FINAL INSTALLATION.

✱ OTHER CRASH TESTED MAILBOX SUPPORTS AND ASSEMBLIES MAY ALSO BE USED.

LOCATE THE MAILBOX 0.2 TO 0.3 METERS OUTSIDE THE EDGE OF THE SHOULDER OR 0.15 TO 0.3 METERS FROM THE FACE OF CURB.

USE MAILBOXES MEETING THE REQUIREMENTS OF THE STANDARD SPECIFICATIONS.

SEE "A GUIDE TO MAILBOX SAFETY IN MONTANA", 1996 EDITION, FOR ADDITIONAL INFORMATION.

ALL DIMENSIONS ARE MILLIMETERS (mm) UNLESS OTHERWISE NOTED.

DETAILED DRAWING	
REFERENCE STANDARD SPEC. SECTION	DWG. NO. 900-05
MAILBOX DETAIL	
EFFECTIVE: FEBRUARY 2005	
serving you with pride	MONTANA DEPARTMENT OF TRANSPORTATION

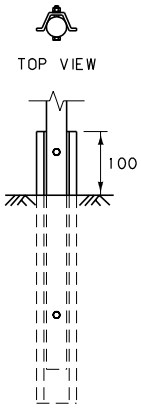

PIPE/POST CONNECTION

ROADWAY VIEW

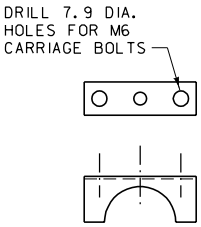

TAIL PIPE CLAMP

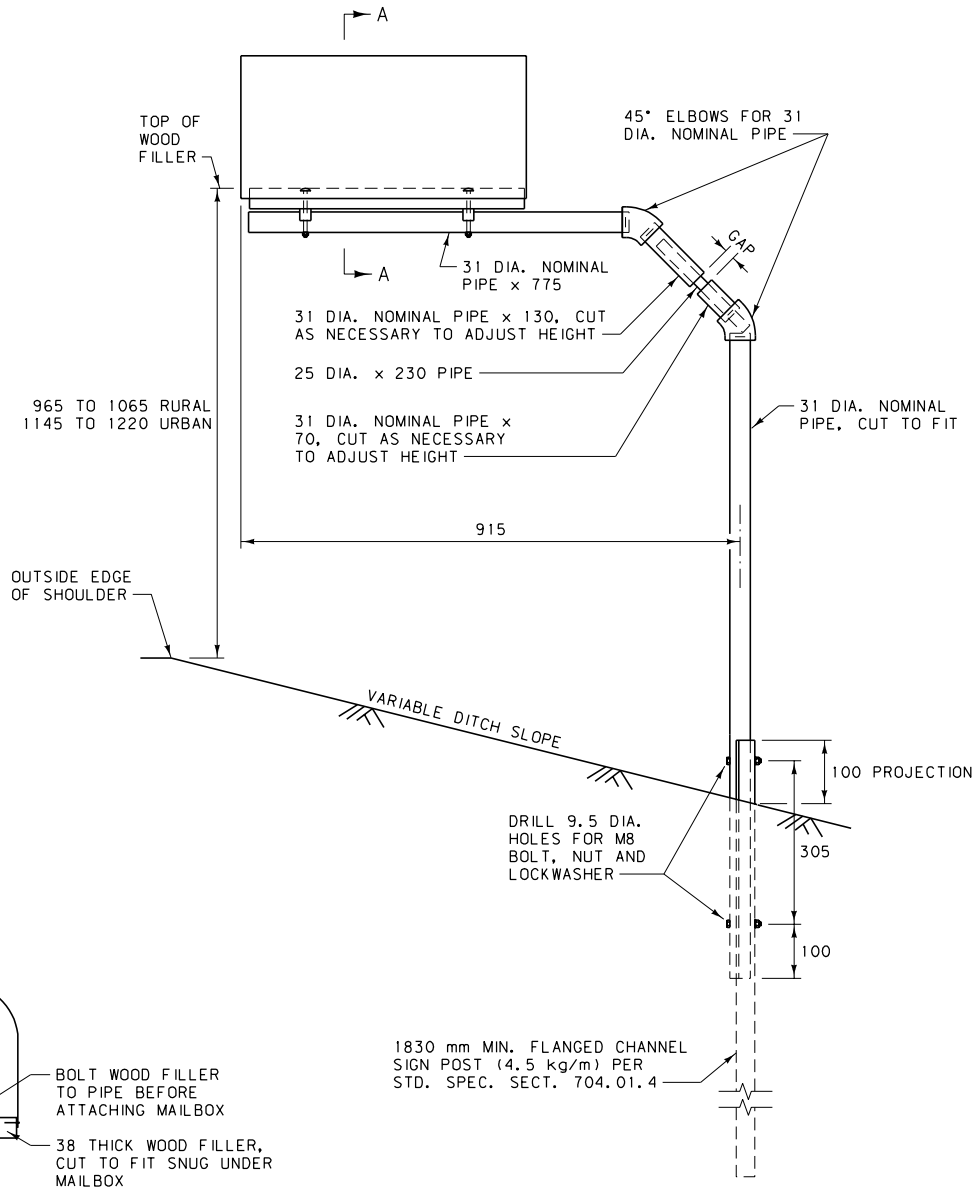

MAILBOX SUPPORT

STEEL PIPE WITH FITTINGS AND STEEL FENCE POST

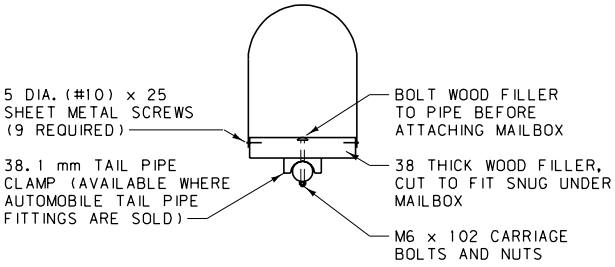

SECTION A-A

NOTES:

GALVANIZE ALL MATERIALS PER AASHTO M 111.

STAKE MAILBOX LOCATIONS BEFORE INSTALLATION FOR PROPER HEIGHT AND DISTANCE FROM THE ROADWAY. ONCE STAKED, NOTIFY THE ENGINEER AND THE POST OFFICE. THE ENGINEER AND POSTMASTER/MAILCARRIER ARE ALLOWED 48 HOURS TO REVIEW AND MODIFY THE STAKED LOCATIONS PRIOR TO FINAL INSTALLATION.

OTHER CRASH TESTED MAILBOX SUPPORTS AND ASSEMBLIES MAY ALSO BE USED.

LOCATE THE MAILBOX 0.2 TO 0.3 METERS OUTSIDE THE EDGE OF THE SHOULDER OR 0.15 TO 0.3 METERS FROM THE FACE OF CURB.

USE MAILBOXES MEETING THE REQUIREMENTS OF THE STANDARD SPECIFICATIONS.

SEE "A GUIDE TO MAILBOX SAFETY IN MONTANA", 1996 EDITION, FOR ADDITIONAL INFORMATION.

ALL DIMENSIONS ARE MILLIMETERS (mm) UNLESS OTHERWISE NOTED.

DETAILED DRAWING	
REFERENCE STANDARD SPEC. SECTION	DWG. NO. 900-10
OPTIONAL MAILBOX DETAIL	
EFFECTIVE: FEBRUARY 2005	
serving you with pride	MONTANA DEPARTMENT OF TRANSPORTATION