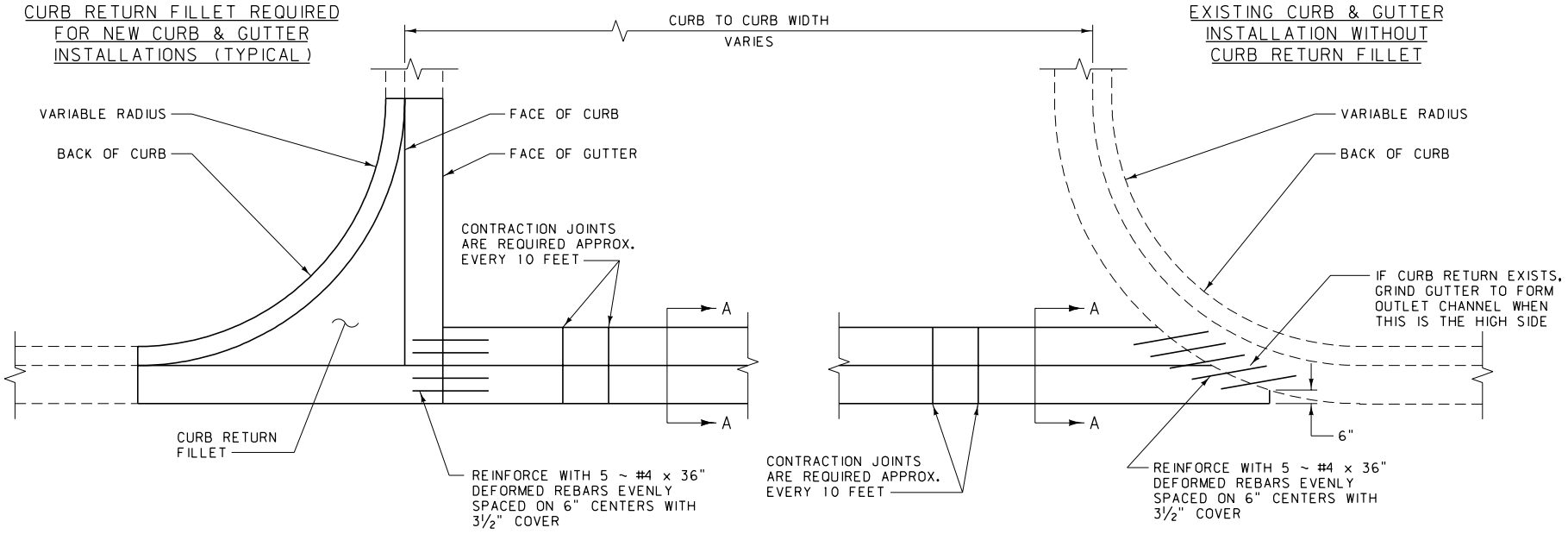

PLAN

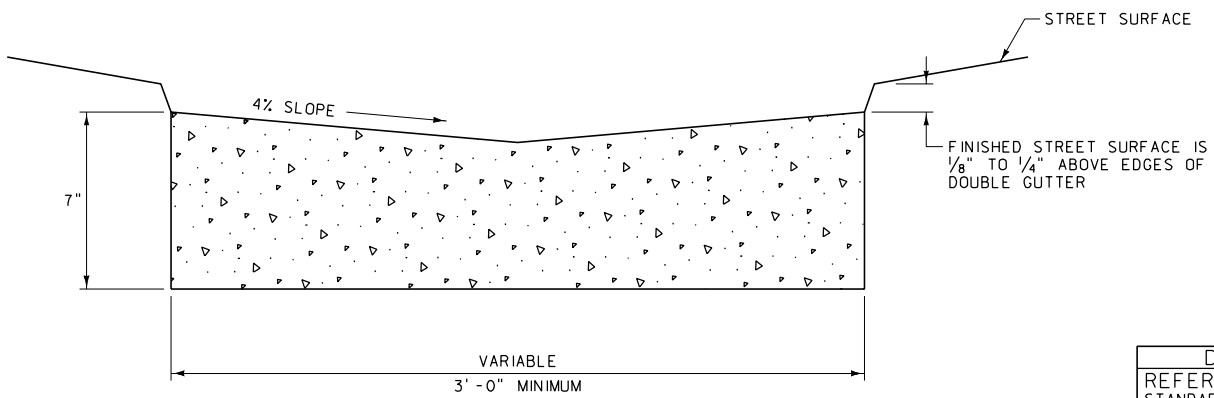

SECTION A-A

NOTES:

INDIVIDUAL LOCATIONS MAY REQUIRE MORE DETAILS FOR ELEVATIONS AND DIMENSIONS.

INSTALL REINFORCEMENT AT ALL CONSTRUCTION JOINTS.

CONTRACTION JOINTS ARE ⅛" MIN. AND ⅜" MAX. IN WIDTH. FORM JOINTS BY SAWING OR SCORING TO A MINIMUM DEPTH OF 1". FORM SCORED JOINTS BY A TOOL WHICH WILL LEAVE ROUNDED CORNERS AND DESTROY AGGREGATE INTERLOCK TO A MINIMUM DEPTH OF 1".

DETAILED DRAWING	
REFERENCE STANDARD SPEC. SECTION 609	DWG. NO. 609-00
CONCRETE VALLEY GUTTER	
EFFECTIVE: FEBRUARY 2005	
serving you with pride	MONTANA DEPARTMENT OF TRANSPORTATION

CONCRETE CURBS

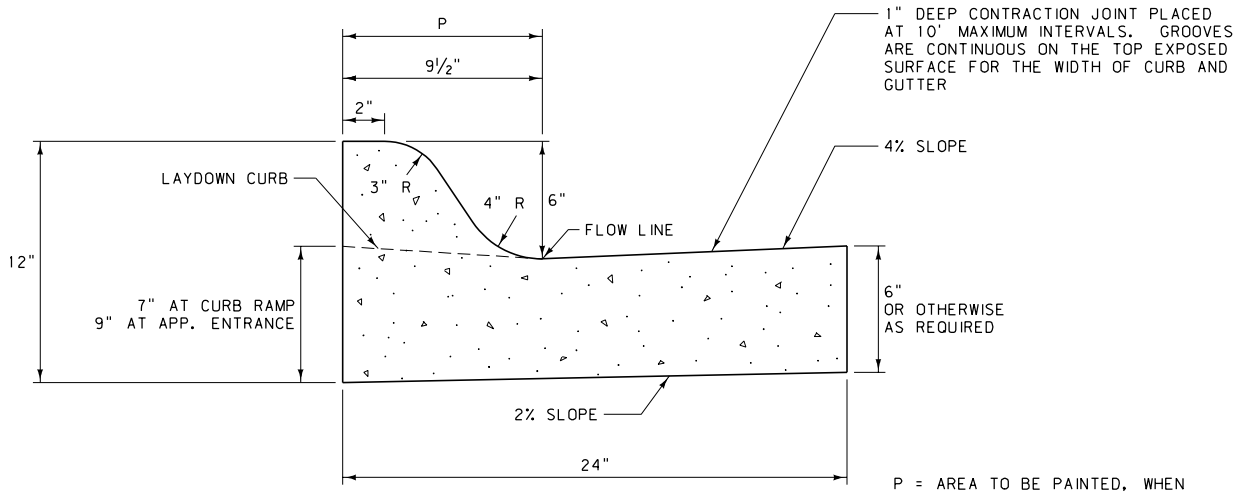

P = AREA TO BE PAINTED, WHEN PAINTED CURB IS REQUIRED

CURB & GUTTER SECTION

0.048 C.Y. CONC. PER 1.0' OF CURB FOR 6" GUTTER. ✱

JOINTS:

(A) WHEN INTEGRAL WITH, TIED TO, OR PLACED AGAINST PORTLAND CEMENT CONCRETE PAVEMENT (P.C.C.P.): MATCH TRANSVERSE CONTRACTION AND/OR EXPANSION JOINTS IN THE ADJACENT P.C.C.P. SLAB. IF REQUIRED, EXTEND ½" MIN. WIDTH PREFORMED EXPANSION JOINTS COMPLETELY THROUGH CURB AND GUTTER THE SAME WIDTH AS THE P.C.C.P. SLAB JOINT. FILL CURB AND GUTTER EXPANSION JOINTS WITH PREFORMED EXPANSION JOINT FILLER.

(B) ALL OTHER CASES:
SPACE CONTRACTION JOINTS IN CURB AND GUTTER AT 10 FOOT INTERVALS OR LESS EXCEPT AS SPECIFIED IN (A) ABOVE. EXTEND ½" MIN. WIDTH EXPANSION JOINTS COMPLETELY THROUGH CURB AND GUTTER EVERY 100 FEET (± 30 FEET), AT INTERVALS EQUAL TO THE NEAREST MULTIPLE OF THE CONTRACTION JOINT INTERVAL, AND FILL WITH EXPANSION JOINT FILLER.

(C) CONTRACTION JOINTS:
CONTRACTION JOINTS ARE ⅛" MIN. AND ⅜" MAX. IN WIDTH. FORM JOINTS BY SAWING OR SCORING TO A MINIMUM DEPTH OF 1". FORM SCORED JOINTS BY A TOOL WHICH WILL LEAVE ROUNDED CORNERS AND DESTROY AGGREGATE INTERLOCK TO A MINIMUM DEPTH OF 1".

(D) OTHER JOINTS:
SEPARATE THE CURB AND GUTTER FROM ADJACENT SIDEWALK AT POINTS SHOWN ON DTL. DWG. NO. 608-05 WITH A BOND BREAKER MATERIAL, EXCEPT AT APPROACH LAYDOWN CURB LOCATIONS, WHICH REQUIRE SEPARATION USING ½" MIN. WIDTH PREFORMED EXPANSION JOINT MATERIAL. PLACE ½" MIN. WIDTH PREFORMED EXPANSION JOINT MATERIAL AT ALL CURB RETURNS, BRIDGES, DROP INLETS, AND WHERE MEETING CURB AND GUTTER IN PLACE.

EXPANSION JOINT FILLER MATERIAL:

USE PREFORMED EXPANSION JOINT FILLER MEETING THE REQUIREMENTS OF STD. SPEC. 707.

BOND BREAKER MATERIAL:

USE A 15 OR 30 POUND ROOFING FELT MATERIAL, OR OTHER PRODUCT AS APPROVED BY THE ENGINEER. DO NOT USE EXPANSION JOINT MATERIAL.

RADII:

MINIMUM CURB RETURN RADII = 10'. 15' RADII ARE DESIRABLE FOR STREETS.

CONCRETE:

UNLESS OTHERWISE SPECIFIED, CONSTRUCT CONCRETE CURBS AND CONCRETE INTEGRAL CURB AND GUTTER WITH CLASS "D" CONCRETE OR APPROVED EQUAL.

✱ QUANTITIES FOR ESTIMATING PURPOSES ONLY.

BITUMINOUS CURBS

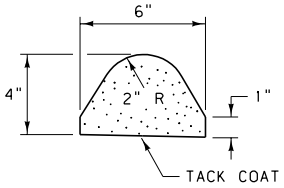

CURB SECTION

1 CUBIC FOOT OF MATERIAL WILL MAKE ABOUT 8 LINEAR FEET OF CURB. ✱

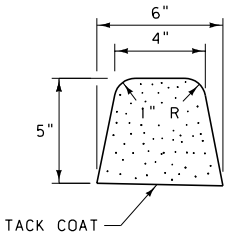

CURB SECTION

1 CUBIC FOOT OF MATERIAL WILL MAKE ABOUT 5 LINEAR FEET OF CURB. ✱

NOTES:

WHEN CURB IS USED IN CONJUNCTION WITH GUARDRAIL, USE THE 4" TYPE. OTHERWISE, THE CONTRACTOR MAY USE EITHER SECTION.

CONFORM ALL MATERIALS AND CONSTRUCTION TO THE STANDARD SPECIFICATIONS FOR BITUMINOUS CURB.

CONCRETE MAY BE SUBSTITUTED FOR THE BITUMINOUS MATERIAL. WHEN CONCRETE IS USED, CONSTRUCT CURB IN ACCORDANCE WITH STANDARD SPECIFICATION 609.

DETAILED DRAWING	
REFERENCE STANDARD SPEC. SECTION 609	DWG. NO. 609-05
MISCELLANEOUS CURBS	
EFFECTIVE: FEBRUARY 2005	

serving you with pride — MONTANA DEPARTMENT OF TRANSPORTATION

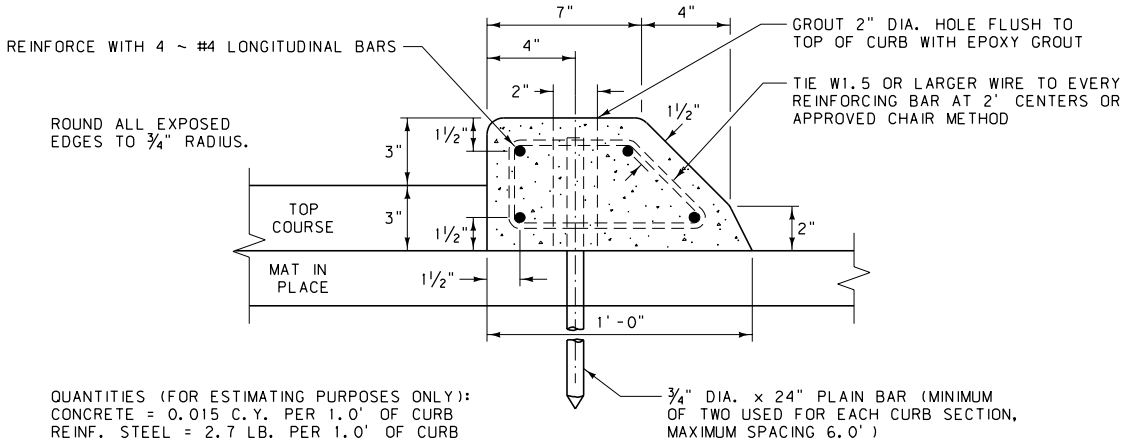

QUANTITIES (FOR ESTIMATING PURPOSES ONLY):
CONCRETE = 0.015 C.Y. PER 1.0' OF CURB
REINF. STEEL = 2.7 LB. PER 1.0' OF CURB

TYPE "A" - MAT IN PLACE

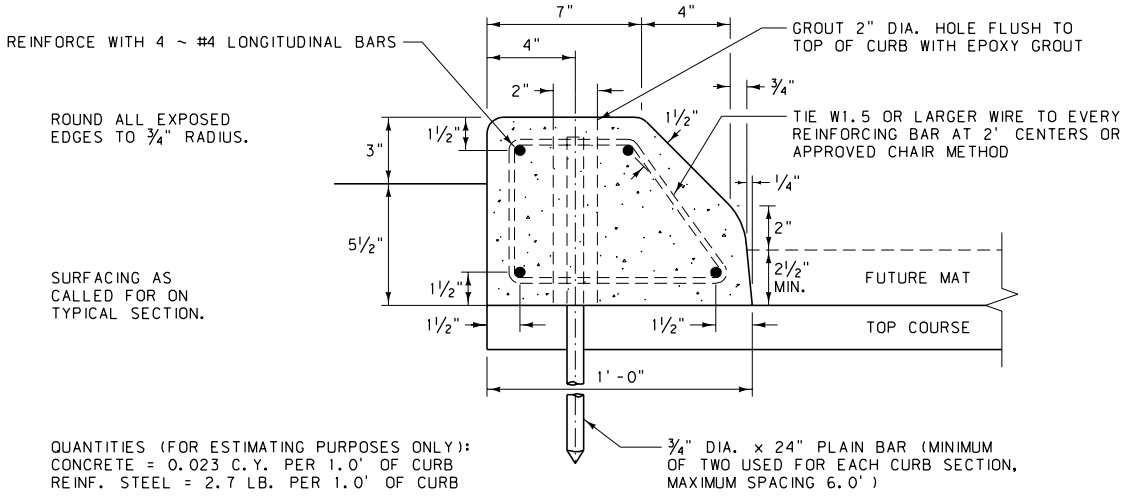

QUANTITIES (FOR ESTIMATING PURPOSES ONLY):
CONCRETE = 0.023 C.Y. PER 1.0' OF CURB
REINF. STEEL = 2.7 LB. PER 1.0' OF CURB

TYPE "B" - FUTURE MAT

CONSTRUCTION:

CURBS MAY BE CONSTRUCTED USING ANY OF THE FOLLOWING THREE METHODS:
(1) PRECAST
(2) CAST IN PLACE
(3) CONSTRUCTED BY THE USE OF AN APPROVED CURB FORMING OR SLIP FORM MACHINE.

WHEN USING EITHER METHOD (2) OR (3), REINFORCING STEEL IS NOT REQUIRED, WITH THE EXCEPTION OF THE PINS, AND THE CURBS ARE SCORED OR SAWN TO A DEPTH OF 1" TO FORM CONTRACTION JOINTS AT INTERVALS OF 10 FEET OR LESS. EXTEND ½" MIN. WIDTH EXPANSION JOINTS COMPLETELY THROUGH CURB EVERY 100 FEET (± 30 FEET), AT INTERVALS EQUAL TO THE NEAREST MULTIPLE OF THE CONTRACTION JOINT INTERVAL AND FILL WITH PREFORMED EXPANSION JOINT FILLER MEETING STD. SPEC. 707.

FORM PRECAST CURBS IN THEIR INVERTED POSITION, IN LENGTHS NOT LESS THAN FOUR FEET, OR MORE THAN TEN FEET.

MATERIAL:

CONSTRUCT CURBS OF CLASS "D" CONCRETE, OR AN APPROVED EQUIVALENT MIX.

EPOXY BINDER FOR GROUTING MUST MEET THE REQUIREMENTS OF AASHTO M 235 (ASTM C 881).

DETAILED DRAWING	
REFERENCE STANDARD SPEC. SECTION 609	DWG. NO. 609-10
MEDIAN CONCRETE CURBS	
EFFECTIVE: FEBRUARY 2005	
serving you with pride	MONTANA DEPARTMENT OF TRANSPORTATION

NOTES:

½" EXPANSION JOINTS ARE SHOWN AS DARK SOLID LINES FOR VISUAL PURPOSES.

BOND BREAKER IS SHOWN AS DARK DASHED LINE FOR VISUAL PURPOSES.

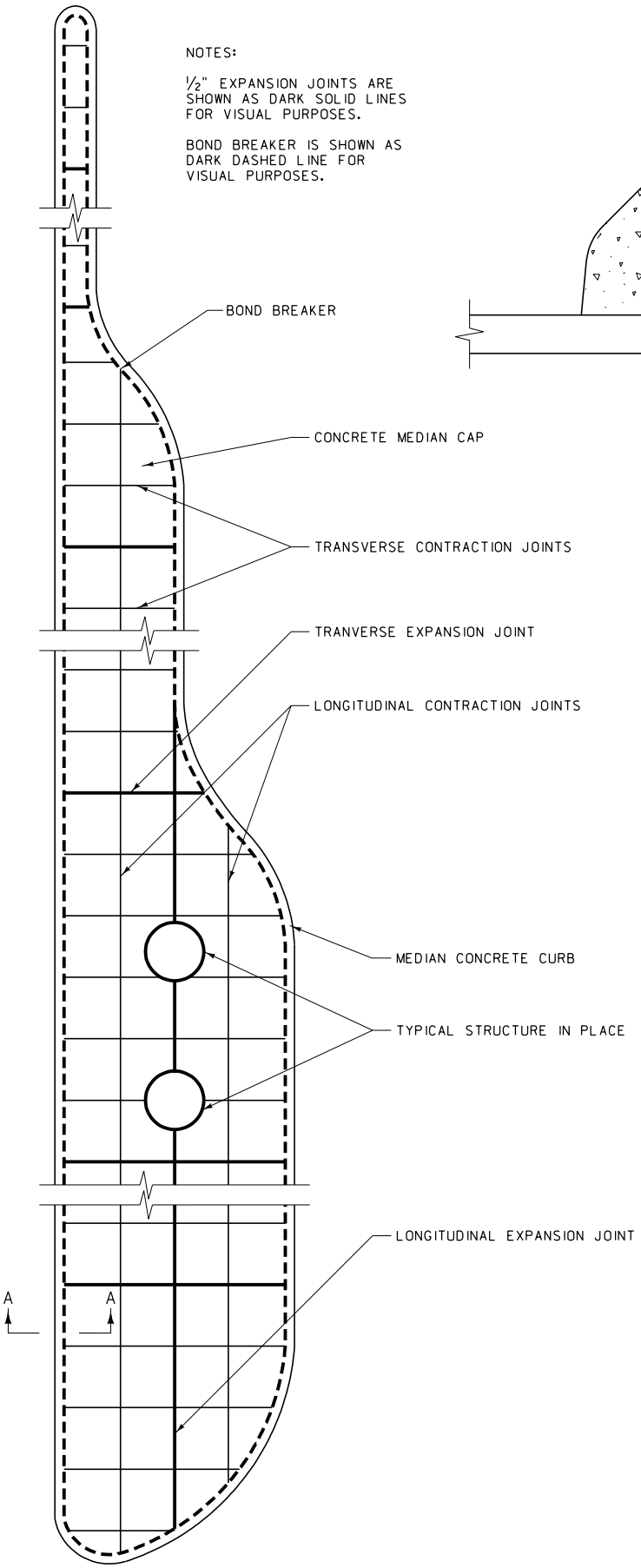

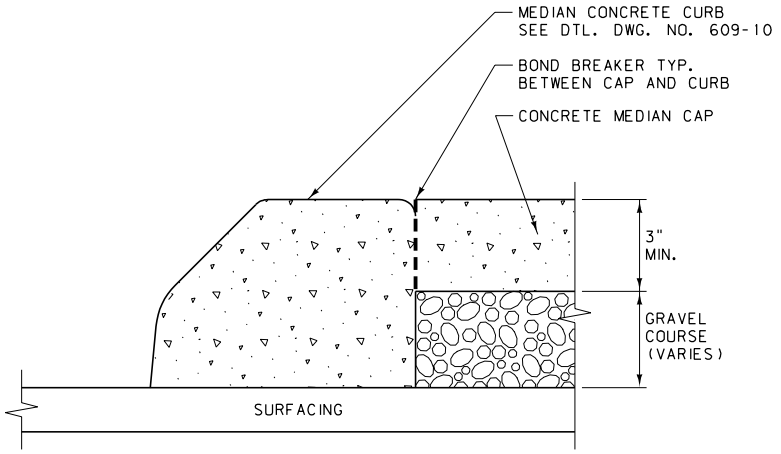

SECTION A-A

NOTES:

INSTALL PREFORMED EXPANSION JOINT FILLER, STD. SPEC. 707.01.3, AT ALL EXPANSION JOINTS, FOR THE FULL THICKNESS OF THE CONCRETE MEDIAN CAP.

INSTALL A BOND BREAKER FOR THE FULL THICKNESS OF THE CONCRETE MEDIAN CAP BETWEEN THE CAP AND THE CURB. USE A 15 OR 30 POUND ROOFING FELT MATERIAL, OR OTHER PRODUCT AS APPROVED BY THE ENGINEER, FOR THE BOND BREAKER. DO NOT USE EXPANSION JOINT MATERIAL AS A BOND BREAKER.

ALL JOINTS MUST BE STRAIGHT AND PERPENDICULAR TO THE CENTERLINE AND THE SURFACE OF THE MEDIAN CAP. WHERE PRACTICAL, ALIGN ALL JOINTS WITH LIKE JOINTS IN ADJOINING WORK. USE JOINTS TO OUTLINE ALL PANELS IN THE MEDIAN CAP. USE SQUARE PANELS WHEN PRACTICAL. ON NARROW MEDIAN CAPS RECTANGULAR SHAPED PANELS ARE ACCEPTABLE.

CONTRACTION JOINTS MAY NOT BE MORE THAN ⅛" WIDE AND NOT LESS THAN 1" IN DEPTH AND MAY BE CUT BY A GROOVE FORMING TOOL.

LOCATE EXPANSION JOINTS AT ALL JOINTS BETWEEN THE MEDIAN CAP AND STRUCTURES IN PLACE AND EVERY 100 FEET (± 30 FEET) AT INTERVALS EQUAL TO THE NEAREST MULTIPLE OF THE CONTRACTION JOINT INTERVAL. USE A LONGITUDINAL EXPANSION JOINT IN THE CENTERLINE OF ALL MEDIAN CAPS WIDER THAN 12 FEET.

USE LONGITUDINAL CONTRACTION JOINTS IN MEDIAN CAPS WIDER THAN 6 FEET, WITH SPACING NOT TO EXCEED 6 FEET. SPACE TRANSVERSE CONTRACTION JOINTS EQUAL TO THE LONGITUDINAL SPACING ON MEDIAN CAPS WIDER THAN 6 FEET. FOR MEDIAN CAPS NARROWER THAN 6 FEET, SPACE TRANSVERSE CONTRACTION JOINTS 10 FEET OR LESS.

DETAILED DRAWING	
REFERENCE STANDARD SPEC. SECTION 609	DWG. NO. 609-12
CONCRETE MEDIAN CAPS	
EFFECTIVE: FEBRUARY 2005	
serving you with pride	MONTANA DEPARTMENT OF TRANSPORTATION