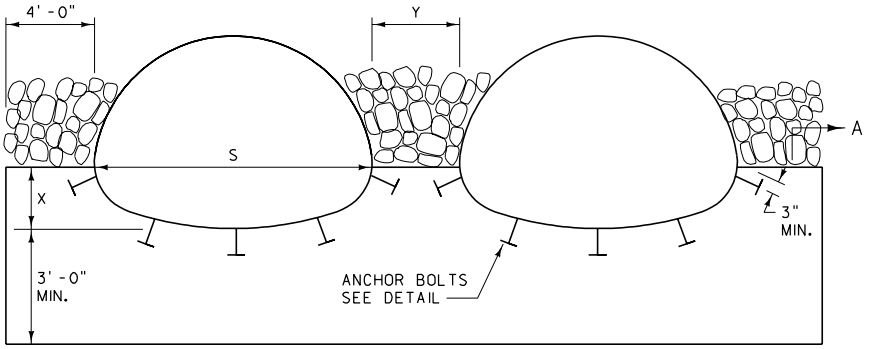

MULTIPLE ARCH CULVERTS

(METAL CULVERTS SHOWN)

X: VARIABLE (SEE DTL. DWG. NO. 603-10 FOR CONCRETE CULV. AND 603-34 FOR METAL CULV.)

Y: FOR METAL CULV. AND CULV. WITHOUT FETS: Y = 4'-0" (OUTSIDE WALL TO OUTSIDE WALL)

FOR CONRETE CULV. WITH FETS: USE Y AS REQUIRED FOR PARALLEL PIPE INSTALLATION, PER DTL. DWG. NO. 613-08

NOTE: Y MAY BE INCREASED ON LARGE DIAMETER PIPES (UP TO A MAX. OF 8'-0") TO AID IN INSTALLATION AND BACKFILL. THE QUANTITIES SHOWN IN 552-04, 06 & 08 WERE FIGURED USING Y = 4'-0". ADJUST QUANTITIES AS NEEDED WHEN Y IS OTHER THAN 4'-0".

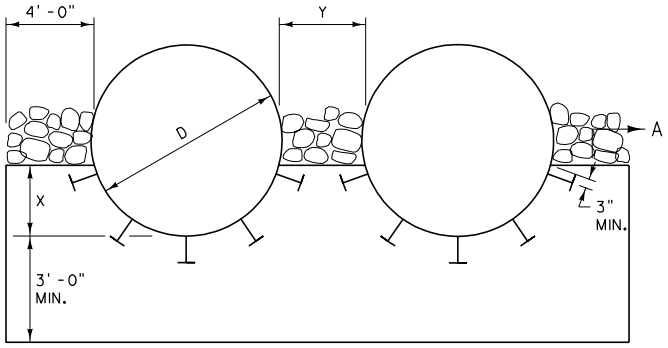

MULTIPLE ROUND CULVERTS

(METAL CULVERTS SHOWN)

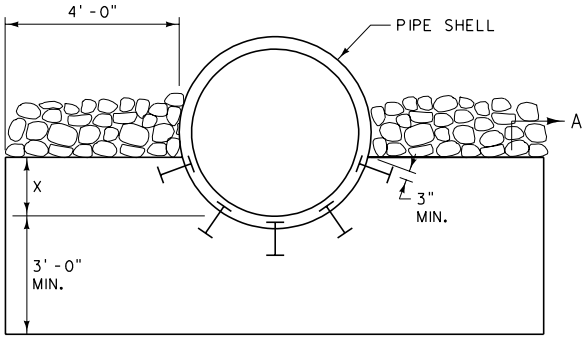

SINGLE ROUND CULVERT

(CONCRETE CULVERT SHOWN)

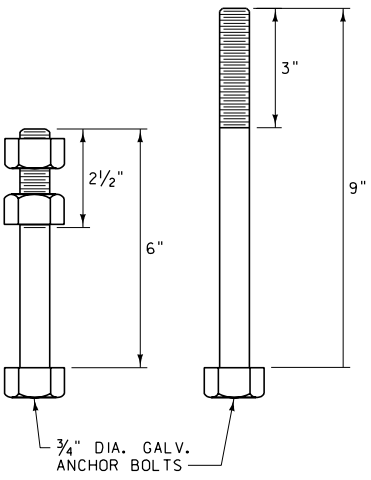

ANCHOR BOLT DETAILS

6" LONG FOR METAL PIPE
9" LONG FOR CONCRETE PIPE

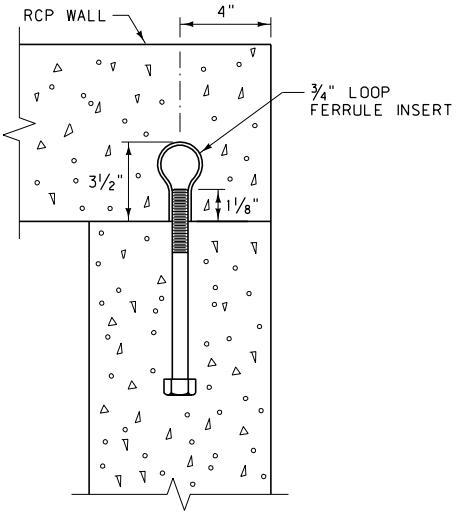

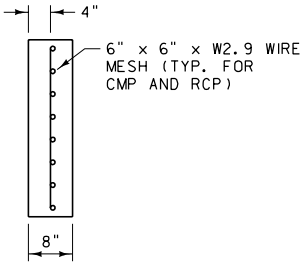

SECTION A-A

NOTES:

USE CL. "DD" CONCRETE OR EQUAL.

SEE DTL. DWG. NO. 603-18 AND 603-20 FOR BEDDING UNDER CULVERTS.

SEE DTL. DWG. NO. 613-14 FOR RIPRAP.

ANCHOR BOLT SPACING:
MIN. OF FIVE ¾" DIA. GALV. ANCHOR BOLTS IN WALL. USE MAX. SPACING OF 1.5'.

DETAILED DRAWING	
REFERENCE STANDARD SPEC. SECTION 552	DWG. NO. 552-00
CONCRETE CUTOFF WALLS FOR CULVERTS	
EFFECTIVE: FEBRUARY 2005	
serving you with pride — MONTANA DEPARTMENT OF TRANSPORTATION	

DIAMETER OR SPAN x RISE	CUBIC YARDS OF CLASS DD CONCRETE (EACH END)										CUBIC YARDS OF RIPRAP (EACH END) ① (DTL. DWG. NO. 613-14)								C. Y. BEDDING MATERIAL ② PER L.F. OF PIPE (DTL. DWG. NO. 603-18)	
	CUTOFF WALL (DTL. DWG. NO. 552-00)		CONCRETE EDGE PROTECTION (DTL. DWG. NO. 613-08)																	
			1.5:1		2:1		2.5:1		3:1		1.5:1		2:1		2.5:1		3:1			
	SING.	DBL.	SING.	DBL.	SING.	DBL.	SING.	DBL.	SING.	DBL.	SING.	DBL.	SING.	DBL.	SING.	DBL.	SING.	DBL.	SING.	DBL.
RCP (SQ. END)																				
48"	1.1	1.8	2.1	3.1	2.6	3.7	3.1	4.4	3.5	5.1	7.7	12.1	9.6	15.0	11.5	18.1	13.6	21.3	0.9	1.8
54"	1.1	1.9	2.3	3.4	2.8	4.1	3.4	4.8	3.9	5.6	8.3	13.0	10.3	16.1	12.4	19.5	14.6	22.9	1.0	2.0
60"	1.2	2.0	2.6	3.7	3.1	4.5	3.7	5.3	4.3	6.1	8.8	13.9	11.0	17.3	13.3	20.9	15.6	24.6	1.1	2.2
66"	1.3	2.1	2.8	4.0	3.3	4.8	4.0	5.7	4.6	6.6	9.4	14.8	11.9	18.9	14.4	22.7	16.9	26.7	1.2	2.4
72"	1.3	2.2	3.0	4.3	3.6	5.2	4.3	6.2	5.0	7.2	10.2	16.1	12.6	20.0	15.2	24.1	17.9	28.3	1.3	2.6
78"	1.4	2.3	3.2	4.7	3.9	5.6	4.6	6.7	5.3	7.7	10.7	17.1	13.3	21.1	16.1	25.5	18.9	29.9	1.4	2.8
84"	1.4	2.4	3.4	5.0	4.1	6.0	4.9	7.1	5.7	8.3	11.3	18.0	14.0	22.3	16.9	26.9	19.9	31.6	1.5	3.0
90"	1.5	2.5	3.6	5.3	4.4	6.4	5.2	7.6	6.1	8.8	11.9	18.9	14.7	23.4	17.8	28.2	20.9	33.2	1.6	3.2
96"	1.6	2.6	3.8	5.6	4.7	6.8	5.5	8.1	6.4	9.4	12.5	19.8	15.5	24.6	18.6	29.6	21.9	34.9	1.7	3.4
RCPA (SQ. END)																				
58.50" x 36.00"	1.1	1.8	1.9	2.8	2.2	3.3	2.6	3.9	3.1	4.5	7.7	12.4	9.6	15.4	11.6	18.6	13.6	21.9	0.9	1.7
65.00" x 40.00"	1.2	1.9	2.0	3.0	2.4	3.6	2.9	4.3	3.3	4.9	8.3	13.4	10.3	16.6	12.4	20.1	14.6	23.6	0.9	1.9
73.00" x 45.00"	1.2	2.0	2.2	3.3	2.7	4.0	3.2	4.7	3.7	5.4	9.0	14.6	11.1	18.1	13.4	21.8	15.8	25.7	1.0	2.0
88.00" x 54.00"	1.3	2.2	2.6	4.0	3.2	4.8	3.7	5.6	4.3	6.5	10.5	17.3	13.0	21.4	15.7	25.8	18.5	30.3	1.1	2.2
102.00" x 62.00"	1.4	2.4	3.0	4.6	3.6	5.5	4.3	6.5	5.0	7.5	11.9	19.6	14.7	24.3	17.7	29.2	20.8	34.4	~	~
115.00" x 72.00"	1.5	2.6	3.3	5.1	4.0	6.1	4.8	7.2	5.5	8.4	12.9	21.5	16.1	26.7	19.4	32.1	22.8	37.8	~	~
122.00" x 77.25"	1.6	2.7	3.6	5.5	4.3	6.6	5.1	7.8	6.0	9.1	13.8	23.0	17.1	28.5	20.7	34.3	24.3	40.4	~	~
138.00" x 87.13"	1.7	2.8	4.1	6.2	4.9	7.5	5.8	8.9	6.8	10.4	15.5	25.9	19.2	32.1	23.2	38.7	27.2	45.5	~	~
154.00" x 96.88"	1.8	3.0	4.5	7.1	5.5	8.5	6.5	10.1	7.6	11.7	17.2	29.0	21.4	36.0	25.8	43.3	30.3	50.9	~	~
168.75" x 106.50"	2.0	3.3	4.9	7.6	5.9	9.2	7.0	10.9	8.1	12.6	18.4	31.2	22.8	38.7	27.5	46.6	32.4	54.7	~	~

DIAMETER OR SPAN x RISE	CUBIC YARDS OF CLASS DD CONCRETE (EACH END)							CUBIC YARDS OF RIPRAP (EACH END) ① (DTL. DWG. NO. 613-14)				SLOPE	C. Y. BEDDING MATERIAL ② PER L.F. OF PIPE (DTL. DWG. NO. 603-18)	
	CUTOFF WALL (DTL. DWG. NO. 552-00)		CONCRETE EDGE PROTECTION (DTL. DWG. NO. 613-08)											
	SING.	DBL.		SING.	DBL.				SING.	DBL.				SING.	DBL.
RCP (FETS)														
48"	1.7	2.8		2.9	4.6				14.1	23.6			2.5:1	0.9	1.8
54"	1.8	3.0		2.7	4.2				12.5	21.2			2.0:1	1.0	2.0
60"	1.9	3.2		2.5	4.0				11.9	20.1			1.9:1	1.1	2.2
66"	1.9	3.2		3.0	4.6				13.2	22.5			1.7:1	1.2	2.4
72"	2.0	3.4		3.3	5.1				14.8	25.1			1.9:1	1.3	2.6
78"	2.1	3.5		3.5	5.6				15.6	26.6			1.8:1	1.4	2.7
84"	2.1	3.6		3.5	5.5				15.0	25.8			1.5:1	1.4	2.8
90"	2.3	3.9		3.6	5.8				15.9	27.4			1.5:1	1.5	3.1
RCPA (FETS)														
58.50" x 36.00"	1.6	2.7		2.8	4.4				14.6	24.7			3.0:1	0.9	1.7
65.00" x 40.00"	1.7	2.9		2.9	4.6				15.3	26.0			3.0:1	0.9	1.9
73.00" x 45.00"	1.9	3.2		3.1	4.9				16.1	27.5			3.0:1	1.0	2.0
88.00" x 54.00"	2.1	3.5		2.9	4.6				14.0	24.2			2.0:1	1.1	2.2
102.00" x 62.00"	2.1	3.6		4.0	6.4				18.4	31.9			2.0:1	1.2	2.4

NOTES:

① QUANTITIES ARE BASED ON A THICKNESS OF 2 FT. AND ARE PROPORTIONED WHEN A DIFFERENT THICKNESS IS SPECIFIED.

② QUANTITIES ARE BASED ON NO. 3 FOUNDATION STABILIZATION WITH A WIDTH EQUAL TO (DIAMETER OR SPAN) + 4 FT. + (2 TIMES SHELL THICKNESS FOR CONCRETE OR 4" FOR METAL) AND A DEPTH EQUAL TO 2 FT. PLUS "X". TO COMPUTE THE TOTAL BEDDING QUANTITY MULTIPLY BY (LENGTH OF PIPE MINUS 24 FEET).

SEE DTL. DWG. NO. 603-18 FOR DEFINITION OF NO. 3 FOUNDATION STABILIZATION AND "X" DIMENSION.

FOR PIPES WITH SKEW BEVEL ENDS - DIVIDE THE QUANTITIES SHOWN BY COSINE OF SKEW ANGLE.

DETAILED DRAWING

REFERENCE STANDARD SPEC. SECTION 552, 603, 613

DWG. NO. 552-04

CONCRETE, RIPRAP AND BEDDING MATERIAL QUANTITIES FOR SING. AND DBL. CULVERT INSTALLATION

EFFECTIVE: FEBRUARY 2005

MDT serving you with pride — MONTANA DEPARTMENT OF TRANSPORTATION

DIAMETER OR SPAN x RISE	CUBIC YARDS OF CLASS DD CONCRETE (EACH END)										CUBIC YARDS OF RIPRAP (EACH END) ① (DTL. DWG. NO. 613-14)								C. Y. BEDDING MATERIAL ② PER L.F. OF PIPE (DTL. DWG. NO. 603-18)	
	CUTOFF WALL (DTL. DWG. NO. 552-00)		CONCRETE EDGE PROTECTION (DTL. DWG. NO. 613-06)																	
			1.5:1		2:1		2.5:1		3:1		1.5:1		2:1		2.5:1		3:1			
	SING.	DBL.	SING.	DBL.	SING.	DBL.	SING.	DBL.	SING.	DBL.	SING.	DBL.	SING.	DBL.	SING.	DBL.	SING.	DBL.	SING.	DBL.
SSPPA 6" x 2" CORRUGATIONS 18" CORNER RADIUS																				
6'-1" x 4'-7"	1.5	2.5	1.8	2.8	2.2	3.3	2.5	3.8	~	~	7.8	12.8	9.7	15.9	11.7	19.2	~	~	1.2	2.4
6'-4" x 4'-9"	1.5	2.5	2.0	3.0	2.4	3.6	2.8	4.2	~	~	8.4	13.7	10.4	17.0	12.5	20.5	~	~	1.2	2.3
6'-9" x 4'-11"	1.6	2.7	2.0	3.0	2.3	3.6	2.7	4.2	~	~	8.4	13.8	10.4	17.1	12.5	20.7	~	~	1.3	2.5
7'-0" x 5'-1"	1.6	2.7	2.1	3.2	2.5	3.8	2.9	4.4	~	~	8.8	14.5	10.9	18.0	13.2	21.7	~	~	1.2	2.5
7'-3" x 5'-3"	1.6	2.6	2.2	3.4	2.7	4.1	3.2	4.8	~	~	9.3	15.4	11.6	19.1	14.0	23.0	~	~	1.2	2.5
7'-8" x 5'-5"	1.7	2.8	2.3	3.5	2.7	4.1	3.2	4.9	~	~	9.5	15.7	11.8	19.5	14.2	23.5	~	~	1.3	2.7
7'-11" x 5'-7"	1.7	2.8	2.4	3.6	2.8	4.3	3.3	5.1	~	~	9.8	16.2	12.2	20.1	14.7	24.3	~	~	1.3	2.6
8'-2" x 5'-9"	1.6	2.8	2.5	3.8	3.0	4.6	3.6	5.4	~	~	10.3	17.1	12.8	21.2	15.5	25.6	~	~	1.3	2.6
8'-7" x 5'-11"	1.7	2.9	2.5	3.9	3.1	4.7	3.6	5.5	~	~	10.5	17.5	13.0	21.7	15.7	26.1	~	~	1.4	2.8
8'-10" x 6'-1"	1.7	2.9	2.7	4.1	3.2	4.9	3.8	5.8	~	~	10.9	18.2	13.6	22.5	16.3	27.2	~	~	1.4	2.8
9'-4" x 6'-3"	1.8	3.1	2.7	4.1	3.2	5.0	3.8	5.8	~	~	11.0	18.4	13.6	22.8	16.4	27.5	~	~	1.5	3.0
9'-6" x 6'-5"	1.8	3.1	2.8	4.4	3.4	5.2	4.0	6.2	~	~	11.5	19.3	14.3	23.9	17.2	28.8	~	~	1.5	2.9
9'-9" x 6'-7"	1.8	3.1	3.0	4.5	3.6	5.5	4.2	6.4	~	~	11.9	20.0	14.8	24.7	17.9	29.8	~	~	1.4	2.9
10'-3" x 6'-9"	1.9	3.2	3.0	4.7	3.6	5.6	4.3	6.6	~	~	12.2	20.4	15.1	25.3	18.2	30.5	~	~	1.6	3.1
10'-8" x 6'-11"	2.0	3.5	3.0	4.7	3.6	5.6	4.2	6.6	~	~	12.1	20.4	15.0	25.3	18.1	30.6	~	~	1.7	3.4
10'-11" x 7'-1"	2.0	3.4	3.1	4.9	3.8	5.9	4.5	6.9	~	~	12.7	21.3	15.7	26.5	19.0	31.9	~	~	1.7	3.3
11'-5" x 7'-3"	2.1	3.6	3.2	5.0	3.8	6.0	4.5	7.0	~	~	12.9	21.8	16.0	27.0	19.3	32.6	~	~	1.8	3.6
11'-7" x 7'-5"	2.1	3.6	3.3	5.2	4.0	6.2	4.7	7.3	~	~	13.3	22.5	16.5	28.0	19.9	33.7	~	~	1.7	3.5
11'-10" x 7'-7"	2.0	3.5	3.5	5.4	4.2	6.5	5.0	7.7	~	~	13.9	23.5	17.2	29.1	20.8	35.1	~	~	1.7	3.4
12'-4" x 7'-9"	2.2	3.8	3.5	5.5	4.2	6.6	5.0	7.8	~	~	14.0	23.7	17.3	29.4	20.9	35.5	~	~	1.8	3.7
12'-6" x 7'-11"	2.1	3.7	3.6	5.7	4.4	6.8	5.2	8.1	~	~	14.4	24.5	17.9	30.4	21.6	36.6	~	~	1.8	3.6
12'-8" x 8'-1"	2.1	3.7	3.8	5.9	4.6	7.1	5.4	8.4	~	~	15.0	25.4	18.6	31.5	22.4	37.9	~	~	1.8	3.6
12'-10" x 8'-4"	2.1	3.6	3.9	6.1	4.8	7.4	5.6	8.7	~	~	15.5	26.3	19.3	32.6	23.2	39.2	~	~	1.7	3.5
13'-5" x 8'-5"	2.2	3.9	3.9	6.2	4.7	7.4	5.6	8.8	~	~	15.5	26.4	19.3	32.8	23.2	39.5	~	~	1.9	3.8
13'-11" x 8'-7"	2.3	4.1	4.0	6.3	4.8	7.6	5.7	9.0	~	~	15.8	27.0	19.6	33.5	23.6	40.4	~	~	2.0	4.0
14'-1" x 8'-9"	2.3	4.0	4.1	6.5	5.0	7.8	5.9	9.2	~	~	16.3	27.7	20.2	34.4	24.3	41.5	~	~	2.0	4.0
14'-3" x 8'-11"	2.3	4.0	4.3	6.7	5.2	8.1	6.1	9.6	~	~	16.8	28.6	20.9	35.5	25.1	42.8	~	~	1.9	3.9
14'-10" x 9'-1"	2.4	4.2	4.3	6.8	5.2	8.2	6.2	9.7	~	·	17.0	29.0	21.0	36.0	25.4	43.4	~	~	2.1	4.2
15'-4" x 9'-2"	2.5	4.5	4.3	6.9	5.2	8.3	6.2	9.8	~	~	17.1	29.4	21.2	36.4	25.6	43.9	~	~	2.2	4.5
15'-6" x 9'-5"	2.5	4.4	4.5	7.2	5.4	8.6	6.4	10.2	~	~	17.7	30.4	22.0	37.7	26.5	45.4	~	~	2.2	4.4
15'-8" x 9'-7"	2.4	4.3	4.7	7.4	5.6	8.9	6.7	10.6	~	~	18.3	31.3	22.7	38.8	27.3	46.8	~	~	2.2	4.3
15'-10" x 9'-9"	2.4	4.3	4.8	7.6	5.8	9.2	6.9	10.8	~	~	18.7	32.0	23.2	39.7	28.0	47.9	~	~	2.1	4.2
16'-5" x 9'-11"	2.6	4.5	4.8	7.7	5.8	9.3	6.9	11.0	~	~	18.9	32.5	23.4	40.3	28.3	48.6	~	~	2.3	4.5
16'-7" x 10'-1"	2.5	4.5	5.0	8.0	6.1	9.6	7.2	11.4	~	~	19.5	33.4	24.2	41.5	29.1	50.0	~	~	2.2	4.4
SSPPA 6" x 2" CORRUGATIONS 31" CORNER RADIUS																				
13'-3" x 9'-4"	2.5	4.3	3.8	6.0	4.6	7.3	5.5	8.6	~	~	15.1	25.7	18.8	32.0	22.6	38.5	~	~	2.2	4.3
13'-6" x 9'-6"	2.5	4.3	4.0	6.2	4.8	7.5	5.6	8.9	~	~	15.6	26.5	19.3	32.9	23.3	39.7	~	~	2.1	4.3
14'-0" x 9'-8"	2.6	4.5	4.0	6.3	4.8	7.6	5.7	9.0	~	~	15.8	27.0	19.6	33.5	23.6	40.4	~	~	2.3	4.5
14'-3" x 9'-10"	2.6	4.4	4.2	6.6	5.0	8.0	6.0	9.4	~	~	16.4	28.0	20.4	34.7	24.5	41.9	~	~	2.2	4.5
14'-5" x 10'-0"	2.5	4.4	4.3	6.8	5.2	8.2	6.2	9.7	~	~	16.8	28.7	20.9	35.6	25.2	42.9	~	~	2.2	4.4
14'-11" x 10'-2"	2.7	4.6	4.3	6.9	5.2	8.3	6.2	9.8	~	~	17.0	29.1	21.1	36.1	25.4	43.5	~	~	2.3	4.7
15'-4" x 10'-4"	2.8	4.9	4.3	6.9	5.2	8.4	6.2	9.9	~	~	17.1	29.4	21.2	36.5	25.6	44.0	~	~	2.5	4.9
15'-7" x 10'-6"	2.8	4.8	4.5	7.2	5.5	8.7	6.5	10.3	~	~	17.7	30.4	22.0	37.7	26.5	45.5	~	~	2.4	4.9
15'-10" x 10'-8"	2.7	4.8	4.7	7.5	5.7	9.0	6.7	10.6	~	~	18.3	31.4	22.7	38.9	27.4	46.9	~	~	2.4	4.8
16'-3" x 10'-10"	2.9	5.0	4.7	7.5	5.7	9.0	6.7	10.7	~	~	18.3	31.6	22.8	39.2	27.4	47.3	~	~	2.5	5.1
16'-6" x 11'-0"	2.8	5.0	4.9	7.8	5.9	9.4	7.0	11.1	~	~	18.9	32.6	23.5	40.4	28.3	48.7	~	~	2.5	5.0
17'-0" x 11'-2"	3.0	5.2	4.9	7.8	5.9	9.4	7.0	11.2	~	~	19.1	32.9	23.7	40.9	28.5	49.3	~	~	2.7	5.3
17'-2" x 11'-4"	2.9	5.2	5.0	8.1	6.1	9.7	7.2	11.5	~	~	19.6	33.8	24.3	41.9	29.3	50.5	~	~	2.6	5.2
17'-5" x 11'-6"	2.9	5.1	5.2	8.3	6.3	10.0	7.5	11.9	~	~	20.2	34.8	25.0	43.2	30.2	52.0	~	~	2.6	5.2
17'-11" x 11'-8"	3.0	5.3	5.3	8.5	6.4	10.2	7.5	12.1	~	~	20.4	35.4	25.4	43.9	30.6	52.9	~	~	2.7	5.5
18'-1" x 11'-10"	3.0	5.3	5.4	8.7	6.5	10.5	7.8	12.4	~	~	20.9	36.2	26.0	44.9	31.3	54.1	~	~	2.7	5.4
18'-7" x 12'-0"	3.1	5.5	5.4	8.8	6.6	10.6	7.8	12.5	~	~	21.1	36.6	26.2	45.4	31.6	54.8	~	~	2.8	5.7
18'-9" x 12'-2"	3.1	5.5	5.6	9.0	6.8	10.9	8.1	12.9	~	~	21.7	37.6	26.9	46.7	32.5	56.3	~	~	2.8	5.6
19'-3" x 12'-4"	3.2	5.7	5.6	9.2	6.8	11.0	8.1	13.0	~	~	21.9	38.1	27.2	47.3	32.8	56.9	~	~	3.0	5.9
19'-6" x 12'-6"	3.2	5.7	5.8	9.4	7.1	11.4	8.4	13.5	~	~	22.5	39.1	28.0	48.6	33.7	58.5	~	~	2.9	5.8
19'-8" x 12'-8"	3.2	5.6	6.0	9.6	7.2	11.6	8.6	13.8	~	~	23.0	40.0	28.6	49.6	34.4	59.8	~	~	2.9	5.8
19'-11" x 12'-10"	3.1	5.6	6.1	9.9	7.4	12.0	8.8	14.2	~	~	23.6	40.9	29.3	50.8	35.3	61.2	~	~	2.8	5.7
20'-5" x 13'-0"	3.3	5.8	6.2	10.0	7.5	12.1	8.9	14.3	~	~	23.8	41.5	29.6	51.5	35.6	62.0	~	~	3.0	6.0
20'-7" x 13'-2"	3.2	5.8	6.3	10.2	7.7	12.4	9.1	14.6	~	~	24.3	42.3	30.2	52.5	36.4	63.2	~	~	3.0	5.9

NOTES:

① QUANTITIES ARE BASED ON A THICKNESS OF 2 FT. AND ARE PROPORTIONED WHEN A DIFFERENT THICKNESS IS SPECIFIED.

② QUANTITIES ARE BASED ON NO. 3 FOUNDATION STABILIZATION WITH A WIDTH EQUAL TO (DIAMETER OR SPAN) + 4 FT. + (2 TIMES SHELL THICKNESS FOR CONCRETE OR 4" FOR METAL) AND A DEPTH EQUAL TO 2 FT. PLUS "X". TO COMPUTE THE TOTAL BEDDING QUANTITY MULTIPLY BY (LENGTH OF PIPE MINUS 24 FEET).

SEE DTL. DWG. NO. 603-18 FOR DEFINITION OF NO. 3 FOUNDATION STABILIZATION AND "X" DIMENSION.

FOR PIPES WITH SKEW BEVEL ENDS - DIVIDE THE QUANTITIES SHOWN BY COSINE OF SKEW ANGLE.

DETAILED DRAWING

REFERENCE STANDARD SPEC. SECTION 552, 603, 613

DWG. NO. 552-06

CONCRETE, RIPRAP AND BEDDING MATERIAL QUANTIES FOR SING. AND DBL. CULVERT INSTALLATION

EFFECTIVE: FEBRUARY 2005

MDT serving you with pride — MONTANA DEPARTMENT OF TRANSPORTATION

DIAMETER OR SPAN x RISE	CUBIC YARDS OF CLASS DD CONCRETE (EACH END)										CUBIC YARDS OF RIPRAP (EACH END) ① (DTL. DWG. NO. 613-14)								C. Y. BEDDING MATERIAL ② PER L.F. OF PIPE (DTL. DWG. NO. 603-18)	
	CUTOFF WALL (DTL. DWG. NO. 552-00)		CONCRETE EDGE PROTECTION (DTL. DWG. NO. 613-06)																	
			1.5:1		2:1		2.5:1		3:1		1.5:1		2:1		2.5:1		3:1			
	SING.	DBL.	SING.	DBL.	SING.	DBL.	SING.	DBL.	SING.	DBL.	SING.	DBL.	SING.	DBL.	SING.	DBL.	SING.	DBL.	SING.	DBL.
CSP AND SSPP ALL CORRUGATIONS																				
54"	1.2	2.0	2.1	3.0	2.5	3.6	~	~	~	~	8.3	13.3	10.3	16.5	~	~	~	~	0.9	1.8
60"	1.3	2.1	2.2	3.3	2.7	4.0	~	~	~	~	8.9	14.3	11.1	17.8	~	~	~	~	1.0	2.0
66"	1.3	2.2	2.4	3.6	2.9	4.3	~	~	~	~	9.6	15.4	11.9	19.1	~	~	~	~	1.0	2.1
72"	1.4	2.4	2.6	3.9	3.2	4.6	~	~	~	~	10.2	16.4	12.7	20.4	~	~	~	~	1.1	2.3
78"	1.5	2.5	2.8	4.1	3.4	5.0	~	~	~	~	10.8	17.5	13.4	21.7	~	~	~	~	1.2	2.4
84"	1.6	2.7	3.0	4.4	3.6	5.3	~	~	~	~	11.5	18.6	14.2	23.1	~	~	~	~	1.3	2.6
90"	1.6	2.8	3.2	4.7	3.8	5.7	~	~	~	~	12.1	19.7	15.3	24.9	~	~	~	~	1.4	2.7
96"	1.7	3.0	3.4	5.0	4.1	6.1	~	~	~	~	13.0	21.2	16.1	26.3	~	~	~	~	1.5	2.9
102"	1.8	3.1	3.6	5.3	4.3	6.4	~	~	~	~	13.6	22.3	16.9	27.7	~	~	~	~	1.5	3.1
108"	1.9	3.3	3.8	5.6	4.6	6.8	~	~	~	~	14.3	23.5	17.8	29.1	~	~	~	~	1.6	3.3
114"	2.0	3.4	4.0	6.0	4.8	7.2	~	~	~	~	15.0	24.6	18.6	30.6	~	~	~	~	1.7	3.4
120"	2.1	3.6	4.2	6.3	5.1	7.6	~	~	~	~	15.7	25.8	19.5	32.0	~	~	~	~	1.8	3.6
126"	2.1	3.7	4.4	6.6	5.3	8.0	~	~	~	~	16.4	27.0	20.3	33.5	~	~	~	~	1.9	3.8
132"	2.2	3.9	4.6	6.9	5.6	8.4	~	~	~	~	17.1	28.2	21.2	35.0	~	~	~	~	2.0	4.0
138"	2.3	4.0	4.8	7.2	5.8	8.8	~	~	~	~	17.8	29.5	22.1	36.5	~	~	~	~	2.1	4.2
144"	2.4	4.2	5.0	7.6	6.1	9.2	~	~	~	~	18.5	30.7	23.0	38.1	~	~	~	~	2.2	4.4
150"	2.5	4.4	5.2	7.9	6.3	9.6	~	~	~	~	19.3	32.0	23.9	39.7	~	~	~	~	2.3	4.6
156"	2.6	4.6	5.4	8.2	6.6	10.0	~	~	~	~	20.0	33.3	24.8	41.2	~	~	~	~	2.4	4.8
162"	2.7	4.7	5.6	8.6	6.9	10.4	~	~	~	~	20.8	34.6	25.7	42.8	~	~	~	~	2.5	5.0
168"	2.8	4.9	5.9	8.9	7.1	10.8	~	~	~	~	21.5	35.9	26.7	44.5	~	~	~	~	2.6	5.2
174"	2.9	5.1	6.1	9.3	7.4	11.3	~	~	~	~	22.3	37.2	27.6	46.1	~	~	~	~	2.7	5.4
180"	3.0	5.3	6.3	9.6	7.7	11.7	~	~	~	~	23.0	38.5	28.6	47.8	~	~	~	~	2.8	5.7
186"	3.1	5.4	6.5	10.0	7.9	12.1	~	~	~	~	23.8	39.9	29.5	49.5	~	~	~	~	2.9	5.9
192"	3.2	5.6	6.7	10.4	8.2	12.6	~	~	~	~	24.6	41.3	30.5	51.2	~	~	~	~	3.0	6.1
198"	3.3	5.8	7.0	10.7	8.5	13.0	~	~	~	~	25.4	42.7	31.5	52.9	~	~	~	~	3.2	6.3
204"	3.4	6.0	7.2	11.1	8.8	13.5	~	~	~	~	26.2	44.1	32.5	54.7	~	~	~	~	3.3	6.6
210"	3.5	6.2	7.4	11.5	9.1	13.9	~	~	~	~	27.0	45.5	33.5	56.4	~	~	~	~	3.4	6.8
216"	3.6	6.4	7.7	11.9	9.3	14.4	~	~	~	~	27.8	46.9	34.5	58.2	~	~	~	~	3.5	7.0
228"	3.8	6.8	8.1	12.6	9.9	15.3	~	~	~	~	29.5	49.9	36.6	61.8	~	~	~	~	3.8	7.5
240"	4.0	7.2	8.6	13.4	10.5	16.3	~	~	~	~	31.2	52.9	38.7	65.6	~	~	~	~	4.0	8.0
252"	4.2	7.6	9.1	14.2	11.1	17.3	~	~	~	~	32.9	55.9	40.8	69.3	~	~	~	~	4.3	8.6
CSPA 2⅔" x ½" CORRUGATIONS																				
49" x 33"	1.1	1.8	1.4	2.1	1.7	2.5	~	~	~	~	6.3	10.1	7.8	12.6	~	~	~	~	0.8	1.6
57" x 38"	1.2	1.9	1.6	2.3	1.9	2.8	~	~	~	~	6.9	11.1	8.5	13.8	~	~	~	~	0.9	1.8
64" x 43"	1.3	2.1	1.7	2.6	2.0	3.1	~	~	~	~	7.4	12.0	9.2	15.0	~	~	~	~	0.9	1.9
71" x 47"	1.3	2.2	1.8	2.8	2.2	3.3	~	~	~	~	7.9	12.8	9.8	16.0	~	~	~	~	1.0	2.1
77" x 52"	1.4	2.3	2.0	3.0	2.4	3.6	~	~	~	~	8.4	13.7	10.4	17.0	~	~	~	~	1.1	2.2
83" x 57"	1.5	2.5	2.1	3.2	2.6	3.9	~	~	~	~	8.9	14.6	11.0	18.1	~	~	~	~	1.2	2.4
CSPA 3" x 1" CORRUGATIONS																				
40" x 31"	1.1	1.7	1.3	1.9	1.5	2.3	~	~	~	~	5.8	9.2	7.2	11.4	~	~	~	~	0.8	1.5
46" x 36"	1.2	1.9	1.4	2.1	1.7	2.5	~	~	~	~	6.3	10.0	7.8	12.4	~	~	~	~	0.8	1.7
53" x 41"	1.2	2.0	1.6	2.3	1.9	2.8	~	~	~	~	6.7	10.8	8.4	13.5	~	~	~	~	0.9	1.9
60" x 46"	1.3	2.2	1.7	2.5	2.0	3.0	~	~	~	~	7.2	11.7	9.0	14.5	~	~	~	~	1.0	2.0
66" x 51"	1.4	2.3	1.8	2.8	2.2	3.3	~	~	~	~	7.7	12.6	9.8	15.9	~	~	~	~	1.1	2.2
73" x 55"	1.5	2.5	2.0	2.9	2.3	3.5	~	~	~	~	8.3	13.5	10.3	16.8	~	~	~	~	1.2	2.5
81" x 59"	1.5	2.5	2.2	3.3	2.6	3.9	~	~	~	~	9.1	14.8	11.2	18.4	~	~	~	~	1.2	2.4
87" x 63"	1.6	2.7	2.3	3.5	2.8	4.2	~	~	~	~	9.6	15.7	11.9	19.5	~	~	~	~	1.3	2.6
95" x 67"	1.7	2.9	2.4	3.7	2.9	4.5	~	~	~	~	10.0	16.6	12.5	20.6	~	~	~	~	1.4	2.8
103" x 71"	1.8	3.0	2.6	4.0	3.1	4.7	~	~	~	~	10.6	17.5	13.1	21.7	~	~	~	~	1.5	3.0
112" x 75"	1.9	3.2	2.7	4.2	3.3	5.0	~	~	~	~	11.1	18.5	13.8	22.9	~	~	~	~	1.6	3.2
117" x 79"	2.0	3.4	2.9	4.4	3.4	5.3	~	~	~	~	11.6	19.4	14.4	24.1	~	~	~	~	1.7	3.5
128" x 83"	2.1	3.5	3.0	4.7	3.6	5.6	~	~	~	~	12.1	20.3	15.1	25.2	~	~	~	~	1.8	3.7
137" x 87"	2.2	3.7	3.2	4.9	3.8	5.9	~	~	~	~	12.7	21.3	15.7	26.5	~	~	~	~	2.0	3.9
142" x 91"	2.2	3.9	3.3	5.2	4.0	6.2	~	~	~	~	13.2	22.3	16.4	27.7	~	~	~	~	2.1	4.2

NOTES:

① QUANTITIES ARE BASED ON A THICKNESS OF 2 FT. AND ARE PROPORTIONED WHEN A DIFFERENT THICKNESS IS SPECIFIED.

② QUANTITIES ARE BASED ON NO. 3 FOUNDATION STABILIZATION WITH A WIDTH EQUAL TO (DIAMETER OR SPAN) + 4 FT. + (2 TIMES SHELL THICKNESS FOR CONCRETE OR 4" FOR METAL) AND A DEPTH EQUAL TO 2 FT. PLUS "X". TO COMPUTE THE TOTAL BEDDING QUANTITY MULTIPLY BY (LENGTH OF PIPE MINUS 24 FEET).

SEE DTL. DWG. NO. 603-18 FOR DEFINITION OF NO. 3 FOUNDATION STABILIZATION AND "X" DIMENSION.

FOR PIPES WITH SKEW BEVEL ENDS - DIVIDE THE QUANTITIES SHOWN BY COSINE OF SKEW ANGLE.

DETAILED DRAWING

REFERENCE STANDARD SPEC. SECTION 552, 603, 613

DWG. NO. 552-08

CONCRETE, RIPRAP AND BEDDING MATERIAL QUANTITIES FOR SING. AND DBL. CULVERT INSTALLATION

EFFECTIVE: FEBRUARY 2005

serving you with pride

MONTANA DEPARTMENT OF TRANSPORTATION