CHAPTER 13

STORM DRAINAGE SYSTEMS

13.1 Overview
- 13.1.1 Introduction 13–3
- 13.1.2 Characteristics 13–3

13.2 Hydrology
- 13.2.1 Introduction 13–5
- 13.2.2 Rational Method 13–5
- 13.2.3 Other Hydrologic Methods 13–5
- 13.2.4 Storm Drain Outfall Detention 13–6
- 13.2.5 Off–Site Development Detention 13–6

13.3 Design Frequency and Spread
- 13.3.1 Frequency 13–7
- 13.3.2 Spread 13–7

13.4 Design Approach
- 13.4.1 Drainage Patterns 13–9
- 13.4.2 City Involvement 13–9
- 13.4.3 Inlet Locations 13–9
- 13.4.4 Flow at Each Inlet 13–9
- 13.4.5 Preliminary Layout 13–10
- 13.4.6 Profile and Control Elevations 13–11
- 13.4.7 Pipe Size and Slope 13–12
- 13.4.8 Outfall Design 13–13
- 13.4.9 Median Barriers 13–13
- 13.4.10 FHWA Review 13–13

13.5 Inlets
- 13.5.1 General 13–15
- 13.5.2 Types 13–15

13.6 Access Holes
- 13.6.1 Location 13–17
- 13.6.2 Spacing 13–17
- 13.6.3 Types 13–17

13.7 Underpasses and Pump Stations 13–19

13.8 Computer Programs 13–21

References 13–23

Chapter Table of Contents (continued)

Appendix A – Example Problems Using MDT's Programs	13–A–1
Appendix B – Example Storm Drain Hydraulic Report	13–B–1
Appendix C – Example Pump Station Design and Hydraulic Report	13–C–1
Appendix D – Example Detention Pond Calculations	13–D–1
Appendix E – Storm Drain Policy	13–E–1
Appendix F – Minimum Cover for Concrete Pipes	13–F–1
Appendix G – Water and Sanitary Sewer Line Design	13–G–1
Appendix H – Storm Drain Profiles	13–H–1
Appendix I – Rainfall Event Tables	13–I–1

13.1 Overview

Introduction
13.1.1

For a general discussion of guidelines for storm drainage, the designer is referred to the publication, "A Policy On Geometric Design Of Highways And Streets," published by the American Association of State Highway and Transportation Officials. For more design and engineering guidance refer to the Federal Highway Administration publication, "**Urban Drainage Design Manual**," (HEC No. 22).

Some communities have adopted Storm Water Design Manuals or Master Plans. When designing in these communities, the local criteria should be followed, in addition to MDT criteria. Conflicts will be addressed at the Preliminary Field Review and at the Plan-in-Hand.

Characteristics
13.1.2

A storm drain system is a drainage structure designed to prevent the accumulation and retention of water on highways and other surfaces and to prevent the discharge of accumulated waters onto abutting landowners. To be a properly designed functional drainage system, the facility must incorporate the following desirable characteristics:

- **Surface runoff from the design storm must be removed with little damage to highway facilities and insignificant interruption of normal traffic.**
- **Storms of greater intensity than the design storm must be removed with the minimum damage and the least interruption to normal traffic that is practical.**
- **Maintenance and operation difficulties must be minimized.**
- **Future expansion of facilities with a minimum of expense or interruption must be considered.**
- **Storm water must be discharged with a minimum of damage to the receiving stream.**

The storm drain system necessary to provide the above requirements consists of the following minimum components:

- **Provisions for interception, conveyance and/or diversion of storm runoff from areas contiguous to the highway (generally behind the curb).**
- **A system of curbs and gutters to convey surface runoff to points of inlet to the underground storm drain.**
- **Inlets to admit water from the gutters to the storm drain.**
- **A storm drain trunk line to collect the flow from drains and branches and to convey the water to a point of disposal.**
- **Outlet structures suitable for disposal of discharge with minimum erosion and damage to the receiving stream.**

13.2 Hydrology

Introduction
13.2.1

The first step to be considered in the design of a storm drainage system is the determination of the runoff. The Rational Method, as described in the Hydrology Chapter is the method that applies to the vast majority of the types of watersheds that are to be handled by storm drains.

Rational Method
13.2.2

There are three major components of the rational method. They are:

- watershed area (A) in acres,
- intensity of rainfall (I) in inches per hour,
- and the runoff coefficient (C) - a relative percentage of rainfall that results in runoff.

It is assumed in the rational method that the product of these three components yields an estimated discharge representative of the frequency of the estimated rainfall intensity. This basic assumption is possible due to the relatively small watersheds to which the rational method is applied. Since watersheds involved in situations requiring storm drainage systems usually comprise areas on the order of fractions of acres up to tens of acres, the rational method is the most logical hydrologic procedure available.

It is important that the rainfall intensity be properly determined. The rainfall intensity should be for a duration equal to the time of concentration. For example, if the time of concentration is 10 minutes, and the design frequency is 2 years, the rainfall intensity should be a 2-year, 10-minute intensity. Attempts to use rainfall events such as the 2-year, 6-hour or 2-year, 24-hour should be avoided unless the volume of runoff needs to be determined. The tables in Appendix B of the Hydrology Chapter should be used to determine the appropriate rainfall intensity for the site. Use of the Federal Aviation Administration equation for time of concentration is *generally* not appropriate for Montana locations. This method *tends* to yield values for time of concentration that are much too long.

Planning for future development is an important consideration. After MDT builds a storm drain trunk line, requests to connect to that storm drain (by municipalities or developers) are common. While it is not the intent of MDT to construct storm drains for facilities other than those owned by MDT, provisions for upstream areas that drain onto MDT facilities need to be included. The drainage design shall include an area one-half block on each side of the highway. This area shall be included in the design with an appropriate runoff coefficient (C of 0.3 for currently undeveloped areas, and 0.9 for currently developed areas). The cost of accommodating excess runoff must be borne by the property owners or the local government, in accordance with the Storm Drain Policy.

Other Hydrologic Methods
13.2.3

Some situations may lend themselves to the use of some variation of the SCS hydrologic estimating methods. Refer to Hydrology Chapter for a discussion of this method and example application.

Storm Drain Outfall Detention
13.2.4

There are two types of detention basins that have some involvement by MDT. In some cases, detention basins are designed at the outfall of the storm drain trunk line, to improve the quality of the water going into the receiving stream. These basins are designed by MDT. Design of these basins should generally be based on HEC-22. The design event for these basins should be the 2-year event, rather than one-half inch of runoff (which has been suggested in some publications as a rule of thumb). A review of the 2-year, one-hour precipitation values in Appendix B of the Hydrology Chapter indicates that while one-half inch of precipitation may be a reasonable average, the values vary from 0.26 inches to 0.73 inches. Several other references are also included in the reference list that may provide some guidelines.

Off-Site Development Detention
13.2.5

More commonly, detention basins are required in cases where a development adjacent to a highway wishes to connect to the existing storm drain trunk line in the highway, in order to reduce the peak flow associated with the development. In this situation, MDT is requested to approve the connection. Approval is generally contingent upon two criteria. First, the drainage area of the development must have been included in the original drainage area of the storm drain system. Secondly, the flow from the development must not exceed the flow from the drainage area prior to development. The only way to accomplish the second requirement is to provide an on-site detention basin. The basin must be sized to accommodate the one-hour design storm (storm duration is a factor because a storage computation is necessary) without increasing the peak outflow. This is not done by using an average rainfall intensity, but rather by developing a hyetograph for a one-hour design storm. Estimation of the effects of detention requires a reservoir routing procedure. An example calculation, including hyetograph development, is included in the Appendix. For the purposes of off-site developments, a 2-year precipitation event should be used for the peak reduction calculations, with an undeveloped runoff coefficient of 0.3 and a developed runoff coefficient of 0.9. This return period was selected based on an analysis of several Montana precipitation stations that indicated 99% of the rainfall events are less than the 2-year rainfall.

13.3 Design Frequency and Spread

Frequency
13.3.1

Following are design criteria for frequency. Allowable spread width should always be calculated at the 10-year flow.

Land Use	Design Frequency
Residential	**2 year**
High Value General Commercial Area	**5 year**
Public buildings Area	**5 year**
High Value Downtown Business Area	**5 – 10 year**

All storm drains should receive a review of flow patterns at the 100-year event (the check storm). This review should consider the risks involved, and whether historic drainage patterns have been changed. It should also include a review of any special problems associated with sags.

Spread
13.3.2

The width of the water surface (spread) at the 10-year flow should not exceed the following criteria:

- **On a two-lane roadway without a parking lane, the spread should be limited to the shoulder width plus the width of one-half of the driving lane.**
- **On a two-lane roadway when a parking lane is provided (minimum 8 foot wide), the spread should be limited to the width of the parking lane.**
- **On a three-lane roadway, the spread should be limited to the shoulder width (whether or not it is a parking lane) plus the width of one-half of the driving lane.**
- **On a four-lane roadway, the spread should be limited to the shoulder width (whether or not it is a parking lane) plus the width of one-half of the outside driving lane.**
- **On a five-lane roadway, the spread should be limited to the shoulder width (whether or not it is a parking lane) plus the width of one-half of the outside driving lane.**
- **On a six-lane roadway, the spread should be limited to the shoulder width (whether or not it is a parking lane) plus the width of one-half of the outside driving lane.**

13.4 Design Approach

Drainage Patterns
13.4.1

The general area that will be served by the storm drain should be determined and the street slopes and drainage patterns identified, including an area one-half block on either side of the highway. This should include identifying adjacent properties that may be served by the storm drain. Potential locations for discharging the storm water should also be located.

City Involvement
13.4.2

The City or local government should be contacted early in the design to see if they wish to participate in the project by having the storm drain intercept city drainage. If the City participates and city drainage is provided for, an agreement between the State and City for financing of the project must be made.

This storm drain agreement should be in accordance with MDT's Storm Drain Policy (see Appendix E). A draft agreement should be prepared by the design engineer (MDT Hydraulics or the Consultant) as soon as preliminary information is available. The agreement should address the issues of drainage areas considered and cost sharing. The agreement should be reviewed by the MDT Preconstruction Engineer and MDT Legal Services, then sent to the City for approval.

Inlet Locations
13.4.3

Inlets are required at locations needed to collect runoff within the design controls specified below. **Inlets must be placed so that the storm water is picked up before it can inconvenience traffic or pedestrians and before it can cause flooding. In general inlets should be placed at the following locations.**

- **Prior to all pedestrian crossings.**
- **At all traffic intersections.**
- **At all low points in the gutter grade.**
- **Where significant flows from off the right-of-way (side streets, parking lots, etc.) are expected.**
- **On horizontal curves where a change from normal crown to super elevation may cause water to cross the highway, or be trapped in a low spot.**
- **Where lay-down curb (e.g., at an approach) may allow the storm water to escape and cause flooding.**
- **Where the gutter flows become so great that the spread width criteria are exceeded.**

Inlets placed on a slope will generally not intercept 100% of the gutter flow. Some water will flow past the inlet, and this needs to be considered in the design. In general, inlets should be designed to intercept at least 80% of the design flow reaching the inlet. This may require use of slotted drains in addition to a standard inlet. In locations where flow past the inlet is very undesirable, additional inlets (or slotted drains) may be appropriate.

Flow at Each Inlet
13.4.4

Design of appropriate inlet capacity is as important as design of trunk line capacity. An adequately sized trunk line with too few inlets will not achieve the desired level of service. With the location of the inlets

established, the drainage section for each inlet can be determined. A drainage section is an incremental area of the drainage pattern which contributes runoff to one inlet. Drainage sections, once established, should be drawn on a map showing drainage patterns and designated in a manner which identifies it with the appropriate inlet. This map should become part of the permanent file.

A runoff coefficient for each drainage section needs to be determined (see Hydrology Chapter for details). Extensive residential or open urban areas require careful consideration in determination of runoff factors. It is possible that only the hard surface area contributes to the peak runoff. This needs to be evaluated in drainages with significant open areas.

With drainage sections and slopes known, the time of concentration is determined. The time of concentration is the time required for a particle of water falling at the most remote point of the drainage section to reach the section inlet by following the normal drainage pattern. The Hydrology Chapter presents several methods for determining this. A minimum of five minutes should be used for inlet time of concentration.

With the inlet time known and the intensity-duration data previously determined, the design intensity can be determined for each section. Using the Rational Formula, the runoff for each inlet can be computed. The inlet and the connection from the inlet to the storm drain should be designed for this flow.

Preliminary Layout
13.4.5

To effect future repairs and eliminate access hole covers in driving lanes, it is desirable to locate new storm drains outside the pavement area. Medians usually offer the most desirable storm drain location. In the absence of medians, a location beyond curb line on state right-of-way or on easements is preferable. Desirable locations outside the paved area are frequently occupied by other utilities or obstructions and usually cannot be used for storm drain location. In the absence of a median or suitable unpaved area, storm drain location must be considered under the highway surface. In this event, the least hazardous area of the pavement, where damage is unlikely to occur and repairs can be most conveniently and inexpensively made, must be chosen. There are several locations that could accommodate storm drain trunk lines. They include: 1) the center of the roadway, particularly if it is a center turn lane; 2) in the gutter, allowing for access holes to also be used as inlets, and, 3) along the shoulder stripe, which keep the access hole covers out of the driving lane.

Reinforced concrete pipe shall normally be used for storm drains. All drain pipe shall be the watertight gasket joint type. Several types of gaskets are available, including some that are resistant to oils and gases. The minimum diameter of pipe used shall be 12 inches for inlet to access hole connectors and 18 inches for all main storm drain lines. The minimum class for reinforced concrete storm drain pipe is Class 2. The junction of two pipes of different diameters is made by matching the top inside elevations in the access hole.

In sag locations, consider using slotted drain immediately upstream from the drop inlet. Computationally, it is necessary to compute the slotted drain separately, then use the flow that is not intercepted by the slotted drain as the flow for the drop inlet.

Profile and Control Elevations
13.4.6

Before design of the main drain begins a profile should be established which shows all control elevations. Control elevations include anything that might affect the selection of the drain profile.

Minimum cover to protect the drain pipe from excessive loads must be provided along the drain pipes and on inlet connections. The cover shall never be less than that indicated in Appendix F, and the pipe should generally not be allowed to extend into the surfacing section. A cover of at least two feet is preferable where practical. Pipe class must be selected to fit the minimum cover provided.

The location and elevation of utilities and other obstructions should be established on the profile so conflicts can be minimized. Some utilities, such as power lines, telephone lines, and small water and natural gas lines can be moved to avoid the storm drain. Telephone lines encased in concrete must be avoided. The presence of telephone access holes is a strong indication that the telephone lines are encased in concrete. Other utilities such as sanitary sewers, other storm drains, large water and natural gas lines, and fiber optic telephone lines must be avoided. Railroads often require clearances that should be shown on the profile. Coordination with the Utilities Section will also be required for all potential conflicts.

The outlet control elevation is set by the receiving stream. The possible water surface elevations in the receiving stream must be considered when setting this control elevation and when designing the storm drain outfall. With the proper designation of all control elevations on the profile, these elevations are more easily considered during the design.

Pipe Size and Slope
13.4.7

As the design of each section of the storm drain depends on the characteristics of the previous sections, the design must start at the upper most part of the drain and proceed downstream a section at a time. The required capacity of a section is dependent on its time of concentration and contributing drainage area. The time of concentration used to determine drain size and slope for a drain without branches is the inlet time at the most remote point, plus the total flow time in the drain. The minimum time of concentration for trunk line design should be 5 minutes for basins consisting primarily of hard surfaces, and 10 minutes for basins consisting primarily of more pervious surfaces, such as lawns. The design concentration time for a point below the junction of two or more drain branches is not necessarily the longer of the two periods. A larger flow could easily result with a smaller concentration time. All conditions must be investigated when determining the appropriate time of concentration for any multiple branch storm drain design. The junction of flows from more than one inlet may require a recalculation of discharges, depending upon which time of concentration controls the combined flow.

With the flow in the section under consideration known, a pipe diameter and slope may be selected to accommodate this flow. When possible, the slope should approximate the roadway slope. When the depth of flow in the pipe exceeds 75% of the pipe diameter (at approximately 91% of full pipe capacity), the next larger size pipe should be used. The pipe diameter and slope should be selected so that the velocity in the pipe when it is flowing full is greater than 2.5 feet per second and less than 10 feet per second, when possible. The diameter and slope must also be established to fit all control elevations. The design Manning's n value for concrete pipe should be 0.012.

With the pipe diameter, slope and velocity for a section of pipe known, the invert elevations for each end of the section may be established. Head losses occur at each access hole, and need to be accounted for. In simple systems, this is commonly accomplished by a drop of 0.1 foot between the inlet and outlet. In more complex systems, and in larger systems, an analysis of the losses should be completed, as described in HEC-22.

It is necessary to analyze the hydraulic grade line of the storm drain system in order to determine if the design flows can be accommodated without water coming out of inlets or access holes. Pipe diameter should generally not decrease in the downstream direction, even if pipe slope increases significantly. If this is done, inlet control needs to be carefully evaluated. It may be possible to increase the excavation slightly, thereby increasing the pipe slope upstream, and decreasing the pipe size upstream. On systems with steep slopes, inlet control at each access hole needs to be evaluated. When the HW/D ratio is greater than 1, the access hole needs to be deep enough to contain the headwater. When the HW/D ratio is greater than 0.75, inlet control at the access hole may create backwater that will impact the flow characteristics upstream.

Outfall Design 13.4.8	The purpose of the storm drain outfall is to transport the storm water to a natural drainage and discharge it with as little erosion and pollution as practical. A storm drain outfall consists of the outfall line (or channel), possibly a detention basin, and provisions for energy dissipation. Open ditches for outfall lines should be investigated and used whenever possible. The maximum discharge determined for the drain shall be used for sizing the outfall. At the discharge point of the storm drain, **provisions** to minimize pollution to the receiving stream should be considered. **These could include grass-lined ditches, dry detention basins, and wet detention basins, in order of preference (see the reference list for additional information).** Provisions to dissipate the energy at the pipe outfall need to be included.
Median Barriers 13.4.9	**Median barriers present a special problem for storm drains.** Where median barriers are used, particularly on horizontal curves with associated super-elevations, it is necessary to provide for some relief for the water which accumulates against the barrier. This can be done with weep holes in the barrier**, although these can become clogged with sanding material**. In order to minimize flow across traveled lanes, a more preferred method of relief is to collect the water into a subsurface system which ultimately connects with the main storm drainage system. Slotted drains may be used adjacent to median barriers.
FHWA Review 13.4.10	**Some large storm drains will require review by FHWA. Criteria for this review are included in FHWA Order 5520.1.**

13.5 Inlets

General
13.5.1

Inlets are drainage structures utilized to collect surface water through grate or curb openings and convey it to storm drains or directly outlet to culverts. Grate inlets subject to traffic should be bicycle safe and be load bearing adequate. Appropriate frames should be provided. **It is the design engineer's responsibility to insure that the inlet grate is shown in the correct location (station and offset) on the plans (in the low point of the gutter). This has been a problem on some previous MDT projects.**

Types
13.5.2

There are five types of inlets used by MDT in storm drain applications. The following discussion describes each type and its advantages and disadvantages. The capacity of the inlet at a particular location should be calculated using HEC-22, or MDT's Inlet Spacing program.

1. **Type I, II and III Drop Inlets - These inlets have a large hydraulic capacity when located in a sag. They are considered bicycle safe only when the bars are turned perpendicular to the curb line. This significantly reduces their effectiveness in locations other than sags. The difference among the three types relates to the size and shape of the concrete structure below the grate. The grate is identical for all three types.**

2. **Type IV Drop Inlet - These inlets have curved vanes to increase the interception capacity on slopes. The grate is smaller than the Type I grate, but is more appropriate in locations along a slope. When these inlets are designed in curb and gutter sections, care needs to be taken to insure that the inlet is placed in the low point of the gutter.**

3. **Type II Curb Inlet - These inlets have curved vanes to increase the interception capacity on slopes, and also have a curb opening. The grate is smaller than the Type IV Drop Inlet. The curb opening does provide some capacity when the grate is plugged with debris, so these grates are often used in urban areas where there are numerous trees. The frame is also an integral part of the curb, assuring that the inlet is placed immediately next to the curb.**

4. Slotted Drain - These inlets consist of a slotted opening along the curb with bars perpendicular to the opening. Slotted inlets function in essentially the same manner as curb opening inlets, i.e., as weirs with flow entering from the side. **Slotted drains are used only in combination with Type IV Drop Inlets or Type II Curb Inlets to provide increased interception capacity.**

5. **Median Inlet - These inlets are generally used in the Interstate median. They are designed to be used in the road side ditch. They have a very large hydraulic capacity, but are neither bicycle nor pedestrian safe.**

Types (continued)

6. **Combination Access Hole/Inlet - In some locations, it is cost effective to use the access hole as an inlet. This is accomplished by using a Type 3 access hole, and placing a standard inlet frame on the lid, instead of a standard access hole frame and lid.**

In addition, where significant ponding can occur, in locations such as underpasses and in sag vertical curves in depressed sections, it is good engineering practice to place flanking inlets on each side of the inlet at the low point in the sag. The flanking inlets should be placed so that they will limit spread on low gradient approaches to the level point and act in relief of the inlet at the low point if it should become clogged or if the design spread is exceeded.

13.6 Access Holes

Location
13.6.1

Access holes (formerly termed manholes) are utilized to provide access to continuous underground storm drains for inspection and cleanout. Where feasible, combination inlets/access holes should be used in lieu of access holes, so that the benefit of extra stormwater interception is achieved with minimal additional cost. Typical locations where access holes should be specified are:

- where two or more storm drains converge,
- at intermediate points along tangent sections,
- where pipe size changes,
- where an abrupt change in alignment occurs,
- where an abrupt change of the grade occurs, and
- **where inlet connections are made.**

Access holes should generally not be located in traffic lanes; however, when it is impossible to avoid locating an access hole in a traffic lane, care should be taken to insure it is not in the normal vehicle path.

Spacing
13.6.2

Access holes should be provided at a maximum spacing of one per block, not to exceed the following criteria:

Size of Pipe (inches)	Maximum Distance (feet)
12–54	**500**
60–up	1000

Types
13.6.3

MDT uses two types of access holes - a Type 1 and a Type 3. The Type 1 has a 48-inch barrel, with a concentric cone section. The Type 3 has a variable diameter barrel, with a flat slab roof. The Type 1 should be used when it will satisfy the site requirements (generally where there is enough depth to accommodate the cone section). The Type 3 is necessary when used in combination with an inlet, or when the barrel diameter exceeds 48 inches. The access hole should be large enough to maintain a minimum of 12 inches of clearance (horizontally and vertically) between all pipes, as indicated in Figure 13-1. Table 13-1 includes some of the more common pipe sizes, and the necessary size of the access hole for these pipes.

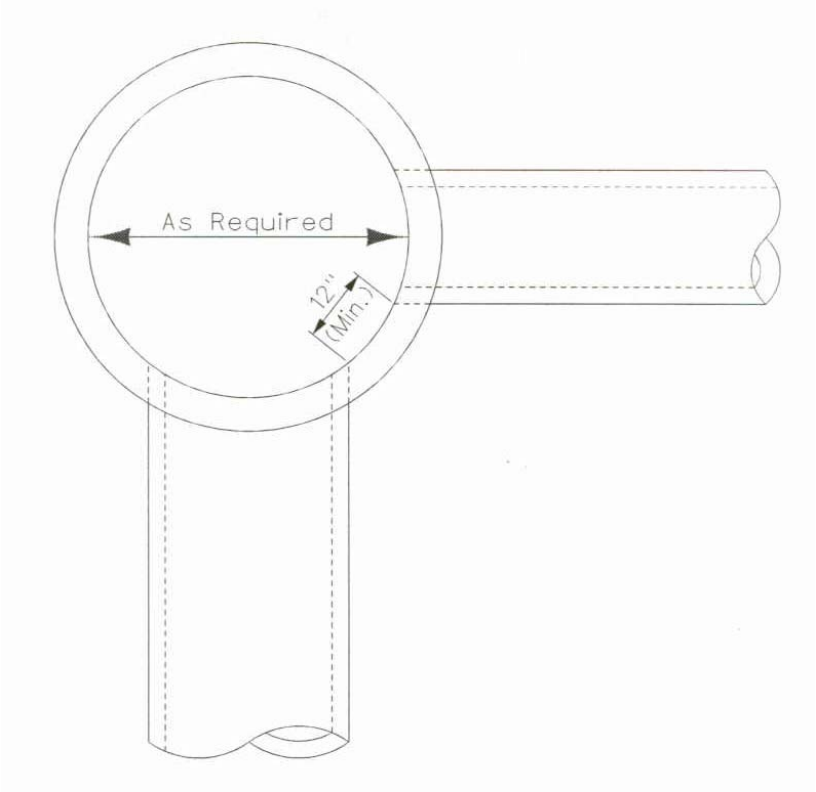

Figure 13-1
Minimum horizontal space between pipes in Access Holes

Pipe Sizes	Access Hole size for 180 angle	Access Hole size for 90 angle
18" and 18"	48"	48"
18" and 24"	48"	54"
24" and 24"	48"	60"
18" and 30"	48"	60"
24" and 30"	48"	66"
30" and 30"	48"	66"
18" and 36"	54"	66"
24" and 36"	54"	66"
30" and 36"	54"	72"
36" and 36"	54"	84"

Table 13-1

13.7 Underpasses and Pump Stations

MDT generally only uses pump stations at underpass locations. Design criteria at underpasses vary widely, depending on a variety of circumstances. Some of the issues to be considered in selecting an appropriate design frequency and duration include:

- **When practical, the pump station should be designed for at least a 2-year event, with no ponding in the underpass. When existing facilities are rehabilitated, lack of available storage may make this impossible. An analysis of several Montana precipitation stations indicates that 99% of the rainfall events are less than the 2-year rainfall. Use of a design less than the 2-year event is therefore still likely to be adequate for nearly all rainfall events.**
- **If the underpass represents the only available route for emergency vehicles to a significant population, longer return periods should be considered. In one example, increasing the return period from the 2-year (99.8% of the events) to the 10-year (99.96% of the events), would have doubled the cost of the pump station (about an additional $200,000).**
- **The length of time that an underpass is inundated for various return-period events should be determined. An underpass that is impassable for 10 minutes for a given return period may be acceptable, whereas one that is impassable for several hours for the same return period may be unacceptable. The availability of detour routes can also be a major factor in determining the length of time that inundation is acceptable (inconvenience is much more acceptable than isolation). An underpass will generally be considered impassable when the water depth in the underpass is greater than 6 inches.**

Detailed guidance on design of pump stations is provided in HEC-22 and in FHWA's "Manual for Highway Storm Water Pumping Stations," Volumes 1 and 2. It is necessary in design of a pump station to develop a design storm, because storage is an important factor in pump sizing. It is not practical to provide pumps capable of pumping the peak flow. Providing multiple pumps, which can pump a design flow when working together, is more efficient than a single large pump. A detailed example of a pump station design, including development of a design storm, is included in Appendix C.

13.8 Computer Programs

To assist with storm drain system design, a microcomputer software module has been developed for the computation of hydraulic gradeline. The computer program, called HYDRA, is part of FHWA's HYDRAIN system. HYDRA can be used to check design adequacy and to analyze the performance of a storm drain system under assumed inflow conditions.

MDT's K.C. Yahvah has developed simplified models for inlet spacing and storm drain analysis, using HEC-22 for inlet spacing and the rational equation for runoff computations. These models are generally adequate for the short lengths of storm drains designed by MDT. An example of each program, along with instructions for use, are included in Appendix A.

MDT's Lesly Tribelhorn has developed a spreadsheet to determine minimum inlet depths and elevations for Type II Curb Inlets and Type IV Drop Inlets, with and without slotted drain. An example of this spreadsheet is also included in Appendix A.

U. S. Department of Transportation, Federal Highway Administration, **November 1996**. **Urban Drainage Design Manual**. Hydraulic Engineering Circular No. 22.

U.S. Department of Transportation, Federal Highway Administration, 1979. Design of Urban Highway Drainage - The State of The Art. FHWA-TS-79-225.

U.S. Department of Transportation, Federal Highway Administration, 1982. Manual for Highway Storm Water Pumping Stations, Volumes 1 & 2, FHWA-IP-82-17.

Office of City Engineer, City of Billings, Stormwater Management Manual, July, 1986.

Morrison Maierle/CSSA Inc., Final Report for Heights Storm Drainage Master Plan, Billings, September 1989.

Thomas, Dean & Hoskins Inc., Stormwater Master Plan for the City of Bozeman, 1982.

City of Great Falls, Storm Drainage Design Manual, June 1990.

Thomas, Dean & Hoskins Inc., Storm Drainage Master Plan for the City of Great Falls, February 1989.

Robert Peccia & Associates, Urban Drainage Plan, prepared for Havre-Hill City-County Planning Board, July 1979.

S & A Engineers, Engineering Study and Report of the Northside Storm Drain System for City of Helena, October 1971.

Robert Peccia & Associates, Davis Gulch Storm Drainage Evaluation, Helena, May 1985.

Stahly Engineering & Associates, Helena Storm Drain Master Plan Update, Last Chance Gulch Basin Final Report, March 1989.

Stahly Engineering & Associates, Helena Storm Drain Master Plan Update, West Area Basin Final Report, March 1989.

Stahly Engineering & Associates, Helena Storm Drain Master Plan Update, Bull Run Basin Final Report, March 1989.

Thomas, Dean & Hoskins Inc., Engineering Report on Storm Drain System for Kalispell, November 1974.

Thomas, Dean & Hoskins Inc., Storm Water Engineering Report for the City of Kalispell, July 1986.

Morrison-Maierle, Inc., Study and Report for Missoula Urban Drainage Interstate Highway, July 1967.

S & A Engineers, Engineering Study and Report for Storm Sewer Master Plan for Plains, October 1972.

Thomas, Dean & Hoskins Inc., Engineering Report on Storm Drain System for Roundup, July 1979.

Forsgren-Perkins Engineering, West Yellowstone Storm Water Final Design Report, June 1987.

References (continued)

Lowell C. Hanson Company, Whitehall Storm Drain Study, December 1979.

Montana Public Works Standard Specifications, distributed by Montana Contractors' Association, Inc., Helena, Fourth Edition, January 1996.

U.S. Department of Transportation, Federal Highway Administration, March 1988. Retention, Detention and Overland Flow for Pollutant Removal from Highway Stormwater Runoff: Interim Guidelines for Management Measures. FHWA/RD-87/056.

Urban Drainage and Flood Control District, Denver, Colorado, September 1992. Urban Storm Drainage, Criteria Manual, Volume 3 - Best Management Practices.

Virginia Department of Transportation, January 1992. VDOT Manual of Practice for Planning Stormwater Management. FHWA/VA-R13.

Appendix A – Example Problems Using MDT's Programs

Storm Drain Trunk Line Design

The intent of this example is to provide enough information to use MDT's Storm Drain program. A storm drain system was required near Belgrade. The portion of the system included in this example consists of nine separate minor drainages, totaling 9.84 acres. The following discussion addresses all of the data shown on the output in Figure 13-A-1.

- **Design Frequency - Selecting F brings up a menu of geographical choices. If the design is in one of the seven cities where short-duration precipitation data is available (Billings, Glasgow, Great Falls, Havre, Helena, Kalispell and Missoula), select the appropriate city. The program will then use the data presented in Appendix B of the Hydrology Chapter. Selecting option 8 will allow the user to input the intensity duration curve. Selecting option 9 will allow selection of one of the 105 weather service stations with one-hour precipitation data, and the statewide averages to convert these one-hour intensities into shorter duration intensities (see Appendix B of the Hydrology Chapter for more information). Each of the options also allows for selection of return periods of 2, 5, 10, 25, 50 or 100 years.**
- **N - Selecting N allows the designer to input the appropriate N value for the storm drain system (typically 0.012 for concrete pipe).**
- **The designer name or initials should be input, by selecting G, and the project name or number by selecting R.**
- **Station - The station must be input, and generally refers to the roadway stationing.**
- **Area - The drainage area must be input, in acres.**
- **C - The coefficient of runoff for the rational equation must be input.**
- **Total C x A - This value is calculated by taking the C value for each area times the area, and adding all of these values for upstream drainages.**
- **Time of Concentration - This value can be input, or it can be calculated. The program calculates time of concentration based on rainfall intensity, slope, surface roughness, and flow length. If the flow length is less than 300 feet, it uses the kinematic wave equation. If it is greater than 300 feet, it uses the kinematic wave equation for the first 300 feet, then uses the modified Manning's equation for gutter flow for the remaining length. The calculation also has a minimum value of 5 minutes (if the time of concentration calculated is less than 5 minutes, the program provides a time of concentration of 5 minutes).**
- **Intensity - The program calculates the precipitation intensity for each time of concentration, using straight line interpolation between the values determined when selecting the frequency.**
- **Q - The flow, in cfs, for each section of pipe is calculated using the rational equation (total C x A times intensity).**
- **Pipe Slope - The pipe slope must be input, in feet per foot.**
- **Pipe Diameter - The pipe diameter must be input, in inches.**
- **Velocity - The program calculates the open channel velocity in the pipe, using Manning's equation.**
- **Length - The length of pipe can be input. The program can also be allowed to calculate this length. It will be calculated by subtracting stations.**
- **Flow time - The program calculates the travel time in the pipe by dividing the length by the velocity.**

- **Pipe capacity - The program calculates the allowable pipe capacity (based on a depth equal to 75% of the pipe diameter, which is about 91% of the full pipe capacity).**
- **Finished grade - The roadway grade must be input.**
- **I.E. In - The invert elevation into the manhole is calculated using the I.E. Out of the previous manhole, the length and the slope.**
- **I.E. Out - The invert elevation out of the manhole must be input.**
- **Manhole Diameter - The diameter of the manhole must be input, if this column is used. It is not necessary to input this information.**
- **Manhole Depth - The depth of the manhole is calculated based on the finished grade elevation and the I.E. Out elevation.**
- **Location - This column is for remarks related to the location of the manhole.**

»»»»»»»»»»»»»»»»»»»»»»»»»»»»»»»»»»»»»» Storm Drain Design «««««««««««««««««««««««««««««««««««

Design Frequency 10 **Designer LT** **Project Belgrade Int.**
Date 05–21–1998 **N = .013** **File: be15**

Station	Area	C	Total CxA	Time Conc	I	Q	Pipe Slope	Pip Dia	Vel	L	Flow Time	Pipe Cap	Finished Grade	I.E. In	I.E. Out	M H Dia	M H Depth	Location
800	0.82	.90	0.74	8.3	2.8	2.0	.00620	18	3.9	722	3.1	7.5	4504.12	0.00	4500.05	48	4.1	CL
1020	1.31	.90	1.92	11.4	2.3	4.5	.00730	18	5.1	590	1.9	8.2	4499.66	4495.57	4495.47	48	4.2	CL
1200	1.27	.90	3.06	13.4	2.2	6.6	.00730	18	5.6	558	1.7	8.2	4495.32	4491.16	4491.06	48	4.3	CL
1370	1.20	.90	4.14	15.0	2.0	8.3	.00740	24	6.0	412	1.2	17.7	4491.14	4486.99	4486.49	48	4.6	CL
1496	0.89	.90	4.94	16.2	2.0	9.7	.00750	24	6.2	636	1.7	17.9	4488.07	4483.44	4483.34	48	4.7	CL
1690	1.37	.90	6.17	17.9	1.9	11.5	.00580	24	5.9	190	0.5	15.7	4483.30	4478.57	4478.47	48	4.8	CL
1748	1.38	.90	7.42	18.4	1.8	13.6	.00500	24	6.0	452	1.3	15.3	4482.36	4477.37	4477.27	48	5.1	CL
1886	0.80	.90	8.14	19.7	1.8	14.4	.00600	24	6.2	130	0.3	16.0	4488.48	4474.78	4474.68	48	13.8	CL
1916	0.80	.90	8.86	20.0	1.7	15.5	.00600	24	6.3	166	0.4	16.0	4483.60	4473.90	4471.43	48	12.2	27mLT
0	0.00	.00	8.86	20.0	0.0	0.0	.00000	0	0.0	0	0.0	0.0	0.00	4470.43	0.00	48	0.0	Outfall

Initial Flow Length = 722 feet

Initial Slope = 0.0054

Figure 13-A-1

Inlet Spacing Design

The intent of this example is to provide enough information to use MDT's Inlet Spacing program. The following discussion addresses all of the data shown on the output in Figure 13-A-2.

- **Design Frequency - Selecting F brings up a menu of geographical choices. If the design is in one of the seven cities where short-duration precipitation data is available (Billings, Glasgow, Great Falls, Havre, Helena, Kalispell and Missoula), select the appropriate city. The program will then use the data presented in Appendix B of the Hydrology Chapter. Selecting option 8 will allow the user to input the intensity duration curve. Selecting option 9 will allow selection of one of the 105 weather service stations with one-hour precipitation data, and the statewide averages to convert these one-hour intensities into shorter duration intensities (see Appendix B of the Hydrology Chapter for more information). Each of the options also allows for selection of return periods of 2, 5, 10, 25, 50 or 100 years.**
- **The designer name or initials should be input, by selecting G, and the project name or number by selecting R.**
- **Station - The station must be input, and generally refers to the roadway stationing.**
- **Area - The drainage area must be input, in acres.**
- **C - The coefficient of runoff for the rational equation must be input.**
- **Time of Concentration - This value can be input, or it can be calculated. The program calculates time of concentration based on rainfall intensity, slope, surface roughness, and flow length. If the flow length is less than 300 feet, it uses the kinematic wave equation. If it is greater than 300 feet, it uses the kinematic wave equation for the first 300 feet, then uses the modified Manning's equation for gutter flow for the remaining length. The calculation also has a minimum value of 5 minutes (if the time of concentration calculated is less than 5 minutes, the program provides a time of concentration of 5 minutes).**
- **Intensity - The program calculates the precipitation intensity for each time of concentration, using straight line interpolation between the values determined when selecting the frequency.**
- **Q - The flow, in cfs, for each drainage area is calculated using the rational equation (total C x A times intensity).**
- **Grade - The gutter grade at the inlet must be input.**
- **Previous Runby - The program calculates the amount of flow that was not intercepted by the previous inlet by subtracting the intercepted flow from the total flow.**
- **Gutter Flow - The program calculates the total gutter flow by adding the flow that was not intercepted by the previous grate (the previous runby) to the flow from the drainage area above the inlet being analyzed.**
- **Depth - The program computes the depth of flow in the gutter, using the modified Manning's equation (see HEC-22), the gutter flow, the gutter grade, and the gutter cross-slope.**
- **Flow Width - The program computes the width of the flow in the gutter.**
- **Intercept - The program computes the flow (in cfs) intercepted by the selected grate. Selecting "C" in this column will begin the calculation process. It is necessary to enter the inlet type (grate inlet, curb opening inlet, slotted drain, grate in sag, or grate and slotted drain), the grate type (from the list of nine choices shown in Figure 13-A-2), and the dimensions of the grate.**
- **% Intercepted - The program computes the percentage of total flow that is intercepted by the selected grate. In general, at least 80% of the design flow should be intercepted, in order to maximize use of the storm drain system.**

- **Gutter Cross-slope - The cross-slope of the gutter (0.042 for MDT's standard gutter section) needs to be input.**
- **Gutter Width - The width of the concrete gutter section (1.2 feet for MDT's standard gutter section) needs to be input.**
- **Pavement Cross-slope - The cross-slope (crown) of the pavement section.**
- **N - The appropriate N value for the pavement (typically 0.015 for asphalt) needs to be input.**
- **Grate Type, Grate Length and Grate Width - These columns represent the values input when the intercepted flow was calculated.**

Inlet Depth Design

Figure 13-A-3 shows an example of the spreadsheet to determine minimum inlet depths and elevations for Type II Curb Inlets and Type IV Drop Inlets, with and without slotted drain.

»»»»»»»»»»»»»»»»»»»»»»»»»»»»»»»»»»»»»» **INLET SPACING** «««««««««««««««««««««««««««««««««

Design Frequency 10 **Designer LT** **Project Belgrade Interchange**
Date 05–21–1998 **N = .015** **File: be1gr.inl**

Station	Area	C	Time Conc	I	Q	Grade	Prev Runby	Gutter Flow	Depth	Flow Width	Inter–cept	Gutter Xslope	Gutter Width	Pave XS	% Int	Grate Type	Grate L	Grate W
800	0.41	.90	8.32	2.8	1.01	0.0054	0.00	1.01	0.18	7.8	0.98	0.042	1.2	0.020	97	5	1.8	1.3
1020	0.66	.90	7.89	2.8	1.69	0.0075	0.03	1.72	0.21	9.0	1.51	0.042	1.2	0.020	88	5	1.8	1.3
1200	0.64	.90	7.17	3.0	1.72	0.0075	0.21	1.92	0.21	9.4	1.66	0.042	1.2	0.020	86	5	1.8	1.3
1370	0.60	.90	7.12	3.0	1.61	0.0075	0.27	1.88	0.21	9.3	1.63	0.042	1.2	0.020	87	5	1.8	1.3
1496	0.44	.90	6.72	3.1	1.23	0.0075	0.25	1.48	0.20	8.4	1.34	0.042	1.2	0.020	90	5	1.8	1.3
1690	0.69	.90	7.23	3.0	1.84	0.0075	0.14	1.98	0.22	9.5	1.70	0.042	1.2	0.020	86	5	1.8	1.3
1748	0.70	.90	7.16	3.0	1.88	0.0005	0.28	2.16	0.20	6.9	2.16	0.042	1.2	0.020	100	2	2.6	2.8

Grate Type

1 – MDT Type IV Inlet
2 – MDT Type I Inlet
3 – Parallel Bar P-1-7/8
4 – Narrow Parallel Bar P-1-1/8
5 – Curved Vane
6 – Tilt Bar - 45 Degrees
7 – Safety Parallel Bar P-1-7/8-4
8 – Tilt Bar - 30 Degrees
9 – Reticuline

Figure 13-A-2

TYPE II CURB INLETS AND TYPE IV DROP INLETS

MINIMUM INLET BOXES FOR GIVEN LATERALS

	12” RCP out	18” RCP out	12” RCP in 12” RCP out	12” RCP in 18” RCP out	18” RCP in 18” RCP out
Edge pavement/gutter elevation	5285.40	5285.40	5285.40	5285.40	5285.40
– grate depth (8” for Type II curb, 6” for Type IV drop)	0.67	0.67	0.67	0.67	0.67
– 1.0’ minimum clearance to top of pipe	1.00	1.00	1.00	1.00	1.00
– pipe thickness	0.17	0.21	0.17	0.21	0.21
– pipe diameter	1.00	1.50	1.00	1.50	1.50
– extra 0.1’ between inverts			0.10		0.10
Minimum invert elevation	5282.56	5282.02	5282.46	5282.02	5281.92
Minimum inlet depth	2.17	2.71	2.27	2.71	2.81

MINIMUM INLET BOXES FOR GIVEN SLOTTED DRAIN SIZES

	12” CSP	18” CSP	24” CSP
Edge pavement/gutter elevation	5285.40	5285.40	5285.40
– 6” slot depth	0.50	0.50	0.50
– clearance from bend	0.80	0.80	0.80
– Pipe diameter	1.00	1.50	2.00
– Extra 0.1’ between inverts	0.10	0.10	0.10
Minimum invert elevation out *	5283.00	5282.50	5282.00
Minimum inlet depth *	1.90	2.40	2.90

- Notes: Compare to elevations calculated above and use lower elevation/deeper box.
  Standardize inlet box depths whenever possible.

Figure 13-A-3

Appendix B – Example Storm Drain Hydraulic Report

Brassey Street - Lewistown
M 7199(1)
Design Report - Storm Drainage
February 1992
Revised May 1992

This report is intended to describe the design concepts used for the storm drain system on this project. There are three separate, small storm drain lines that drain Brassey Street. The design flood for this project is a two-year flood with a maximum depth of flow of 75% of the pipe diameter for the trunk lines.

5th Avenue, Little Casino Creek

The first is located at 5th Avenue. Water which drains down Brassey Street from the beginning of the project will cross 6th Avenue in valley gutters. This water will be collected in inlets at the intersection of 5th Avenue and Brassey Street. The inlets at approximately station 31+05 left and right are to be located at or before the beginning of the curb radius. This will intercept the water flowing in the gutter before it crosses in front of the wheelchair ramp at each corner. These two inlets are designed to be Type III drop inlets, in order to provide adequate capacity. The bars on the grate are to be turned perpendicular to the curb to improve bicycle safety. The inlet at approximately station 31+68 left is located so that the inlet line does not conflict with the water valve box at station 31+50 left. The inlet at station 31+61 right is to be located at the end of the curb return.

The inlet lines from the inlets at station 31+05 will have to cross a telephone line shown at about station 31+18. There is a manhole on this telephone line, about 115 feet right of the centerline of Brassey Street. This manhole indicates that this line may be a conduit or series of conduits, and additional survey was obtained to determine the size and depth of the telephone lines. This additional information required that the inlets at station 31+05 be very shallow (1.8' deep) in order to go over the top of the five 4-inch telephone conduits encased in concrete. The survey also indicated that there was a possible conflict with the inlet lines from stations 31+61 right and 31+68 left, so these inlets were moved to 31+46 left and 31+49 right to avoid conflicts with the telephone line.

The manhole in Brassey Street is to be located 20 feet right of centerline at approximately Station 31+33. This should place the storm drain outfall along 5th Avenue about halfway between the sanitary sewer line and the water line. The distance between the sanitary sewer and the water line is about 11 feet. Consequently, the distance between the storm drain line and the water line will be about 4 or 5 feet. The Department of Health and Environmental Sciences requires the separation to be 10 feet in normal situations. This project was discussed with Roy Wells of DHES on about September 12, 1991. He agreed that a variance to this requirement would be reasonable. The request for variance must be submitted to DHES in writing when we have completed the design.

The trunk line down 5th Avenue is planned to be an 18-inch line. The total drainage area at this intersection is 1.24 acres. The total inflow into the storm drain is about 2.8 cfs at the two-year flow and 5.7 cfs at the 10-year flow. The 18-inch minimum-sized pipe, at a minimum slope of .0022 ft/ft, has a full-flow capacity of 5.3 cfs. At the two-year flow of 2.8 cfs, the velocity is 3.0 fps. The inlet at station 31+05, on the northwest side of Brassey has a drainage area of about 0.7 acre. The inflow into this inlet is estimated to be 3.2 cfs at the 10-year flow. This flow would have a depth of 0.21 foot, and the width of the flow in the gutter would be 10.5 feet. With the typical section having 8 foot shoulders, the 10-year flow extends 2.5 feet into the driving lane, which is within the requirement of not exceeded half the width of the driving lane.

The trunk line proceeds southeast on 5th Avenue for 220 feet to another manhole. At this manhole, the trunk line turns approximately 60 and goes east into Little Casino Creek. The invert of the storm drain outfall was designed to be about elevation 3929.8. The invert of the concrete box about 10 feet upstream is 3929.2. The outfall line will need to have some riprap placed at the end to reduce potential bank erosion and a cutoff wall to hold the pipe in place.

Spring Creek

The runoff from the area southeast of 5th Avenue (about Station 31+70) to Spring Creek (about station 39+50) will be collected at 4th Avenue (station 34+90) and just upstream from Spring Creek. The drainage will be carried across 3rd Avenue (station 38+50) by valley gutters. The runoff will be discharged into Spring Creek on the downstream (left) side of the existing bridge, about 40 feet left of centerline.

The inlets at 4th Avenue are to be located at the curb returns, on Brassey Street. The lines from the inlets at station 34+65 are to be run to the inlets at station 35+15. There is a water valve at Station 35+02, on centerline, that makes it impossible to run all the inlet lines into a single manhole. The manhole is therefore located at station 35+15. The trunk line down Brassey to station 39+55 is located 2 feet right of centerline. The water line is 10 feet left of centerline and the sanitary sewer line is 11 feet right of centerline. The storm drain line is located to provide the required 10 foot separation from the water line, and maintain the maximum separation possible from the sanitary sewer line.

The manhole at station 39+55 is located using two criteria. The outfall from the manhole into Spring Creek was selected to be at a 45 angle to the roadway centerline, and was to be 5 feet away from the edge of the concrete wingwall for the bridge. The angle could be adjusted, however it appears the selected angle will reduce required right-of-way and reduce impacts to the stream bank.

At station 39+76, a combination manhole/Type II curb inlet will be placed at the left curb. This manhole is necessary to insure that the storm drain line does not conflict with the water line that is 10 feet left of centerline. A curb inlet will be located on the right at station 39+76.

The total drainage area for this section of storm drain is 0.92 acres. The estimated two-year flow is 1.74 cfs and the 10-year flow is 3.65 cfs. The full-flow capacity of this 18-inch storm drain line is about 7 cfs. The largest drainage area served by an inlet is 0.26 acres. This area would generate a 10-year flow of 1.2 cfs, with a flow depth of 0.19 foot and a width of flow of 9.5 feet.

The trunk line from station 35+15 to station 39+76 is intended to be at a slope to use standard depth inlets at all locations, except station 35+15. The velocity at the two-year flow will be about 2.7 fps and at the 10-year flow it will be about 3.2 fps. The minimum slope design will reduce excavation depth in this area. The slope of the line from station 39+76 to Spring Creek is selected so that the invert of the outfall will approximately match the water surface elevation in the creek (at least on the date of survey, 7/18/91). The stream bank that is disturbed for construction of the outfall will need to have riprap placed on it to reduce erosion potential and a cut-off wall will be necessary to hold the pipe in place. This outfall and the one at 5th Avenue into Little Casino Creek will need to be provided with safety grates to keep small children from crawling into the pipes.

1st Avenue and Mill Diversion Channel

There is a sag in the new road grade at station 42+75. This location will be the start of the third section of storm drain for this project. Type II curb inlets will be located on each side of the road, at the sag.

The next manhole and set of inlets will be at approximately station 44+79. The first set of railroad tracks cross at about station 45+40. The roadway typical section at this point will be nearly flat to match the tracks. A transition from the normal crown section to this flat section will be required. The inlets should be located near the beginning of the transition. This will allow the water to be intercepted before the spread becomes too large due to the flattening of the cross-slope. The roadway section from the inlets to the railroad tracks will drain to the tracks, similar to the existing drainage patterns.

The section of roadway from the first set of railroad tracks to the end of Brassey Street, at about station 46+20, represents the next drainage area included in the storm drain system. There is a low point at Station 46+00, where new inlets will be provided left and right. A new manhole will be provided about 35 feet right of centerline, behind the new curb. This location was selected in order to avoid conflict with the three sanitary sewer manholes in this area.

From the manhole at station 46+00, the storm drain line will run to a manhole 12 feet right of station 18+73 on 1st Avenue (this apparent additional manhole is necessary to move the storm drain line out from under the rubberized railroad crossing). From this manhole, the storm drain will run to the outfall point in the Mill Diversion Channel, 33 feet left of Station 20+35 (1st Avenue). It will be necessary to break a hole in the concrete wall of the diversion channel for the outfall pipe.

The total drainage area for this storm drain is 0.66 acre. The two-year runoff is 1.3 cfs and the 10-year runoff is 2.6 cfs. The pipe slope is set at the minimum necessary to achieve a velocity of 3 fps at ½ full flow. The full-flow capacity of this 18-inch line is 5.3 cfs. The velocity at the two-year flow is 2.5 fps, and at the 10-year flow it is 3.0 fps. The largest drainage area for an inlet is 0.2 acre. The inflow for a 10-year return period is estimated to be 0.46 cfs. This flow would have a depth of 0.12 foot, and the width of the flow in the gutter would be 6 feet.

The section of 1st Avenue that is being rebuilt will have a superelevation of 0.005 ft./ft. This will drain all of the water to the north, where new curb and gutter will be installed. New inlets are being provided at stations 17+20, 18+37 and 19+52 on the left side of the roadway to collect the minor amount of drainage from 1st Avenue. Manholes will be provided at stations 19+10 and 19+52.

Inlet Type and Depth

Almost all inlets are intended to be Type II, vane style curb inlets. All but seven Type II inlets will be standard depth (3.67 feet). Those that are not include: the inlets at station 31+05 right and left, which need to be shallower due to the telephone conduit, the inlets at 31+46 left and 31+49 right which are shallower due to the constraints of the outfall into Little Casino Creek, the inlets at station 34+65 left and right, which need to be shallower to accommodate inlet lines to station 35+15, and the inlets at station 46+00 left and right, which needs to be deeper to accommodate the inlet line from other inlets. The slope of all inlet lines is intended to be the standard 0.75%. The inlets at station 31+05 left and right will be Type III drop inlets. Use of drop inlets is necessary at this location because of the size of the drainage area and therefore the required inlet capacity. Type II curb inlets are being used for several reasons. Analysis of 1991 bid prices indicates that the Type II curb inlets are significantly less expensive than either the Type I or Type IV drop inlets. The Type II inlets have slightly lower capacity than the other inlets, but inlet capacity is not a problem except at 5th Avenue. Use of curb inlets also provides some protection against blockage by leaves, which is a concern on this street. The last consideration is that use of curb inlets assures the inlet will be placed at the curb line, instead of outside the gutter, which has been a problem on some other projects.

Sediment Control

The last manhole on each section of trunk line is intended to have an invert elevation that is 2 feet below the bottom of the outlet invert. This 2 foot space is intended to provide some storage for sediment that may be washed into the trunk line. The DFWP has expressed a concern about sediment control on this project, and this provision is intended to address their concern. In order for this sediment control feature to remain functional, it will be necessary to maintain these manholes by removing the sediment on a regular basis.

Consideration was given to construction of a detention pond near the railroad tracks that cross 1st Avenue. This was deemed not feasible for several reasons. In order to be functional, the bottom of the pond would have to be several feet below the storm drain pipe. This would put it 6 to 7 feet deep, for a water depth of only 2 feet, thus meaning a large amount of excavation would need to be done for a small amount of benefit. There is a very limited amount of room near the railroad tracks, so the pond size would be very small. There is also a concern about possible right-of-way difficulties with the railroad with this proposal. In past negotiations with the railroad, they have been extremely reluctant to have any ditch sections or standing water near their tracks, so it is likely that they would object to this location. This pond would also only serve one of the three storm drain outfalls. There are no other feasible locations for a detention pond.

Appendix C – Example Pump Station Design and Hydraulic Report

This hydraulic report, prepared by Morrison-Maierle Inc., summarizes the drainage conditions for the area contributing storm water runoff to the Laurel underpass located on First Avenue South, between Main Street and Railroad Street. Some editing has been done for clarity.

HYDROLOGY

The drainage area which contributes to the underpass consists of 5.45 acres. Grassland makes up 1.94 acres of the total area. The grassed area will be disregarded for calculation purposes in order to yield more conservative flow rates (eliminating this area reduces the time of concentration). From this information a peak flow rate of 8.91 cfs, for a 5-year storm, was determined using the rational method.

In addition to storm water flow, the underpass also sustains a constant flow of groundwater estimated to be 1 cfs maximum. This estimate is based on previous discharge and pumping records and also discussions with Montana Department of Transportation maintenance personnel responsible for pumping the groundwater out of the underpass area. The storm runoff plus the groundwater combine for a peak design flow rate of 9.91 cfs during a 5-year storm.

WET WELL

The size of the wet well is governed by two parameters. The first is the amount of ponding in the underpass that is acceptable. The second is the size and number of pumps to be installed. To aid in determining the optimum combination of storage volume, pump sizing, and number of pumps, the rational method with concentration times reduced to one minute increments has been used. The procedure used is described in detail in the calculation portion of this report. This procedure allows the modeling of the wet well in operation and decisions can be made based on the results.

It was agreed by the MDT that during a 5-year storm, up to 18" of ponding in the underpass is acceptable. Ponding over 18" warrants the closing of the underpass to even emergency traffic.

It was determined that a seventeen foot (17') diameter wet well with 6.5' depth from the bottom of the wet well to the invert of the inlet line will be of adequate size to accommodate a 5-year storm. The wet well will be equipped with three 15 hp, 800 gpm pumps having a total head of 40 feet and operating at 73% efficiency. To work most effectively, the "on" floats will be set at 3', 4' and 5.5' off the bottom of the wet well. The "on" float to the highest lag pump will be set one foot below the invert of the inlet pipe to minimize the use of all three pumps on smaller storms. The pumps "off" floats shall be set no lower than 18" from the bottom of the wet well. Through an on-site system analysis, the floats can be easily adjusted. This may be necessary if it is determined that the lift station will perform better with the control floats set at different elevations.

To minimize the number of pump starts per hour a pump alternator will be installed. Starts per hour becomes a concern during the times when groundwater is the only water source entering the wet well. Calculations show that during a constant flow of 1 cfs, one pump will start twice every hour and the remaining two will start once each hour. This meets the Department of Transportation pump start requirement of no more than four starts per hour per pump (see figure 13-C-1).

SYSTEM PERFORMANCE

The wet well is designed for a 5-year storm to allow no more than 18" of ponding to occur in the underpass. As shown on figure 5, the wet well and underpass will continue to fill until about 38 minutes into the storm. After that, it takes only 18 minutes to completely drain the underpass and the wet well. Calculations show that the underpass will have standing water in it for about 17-18 minutes. The maximum standing water level is about 13". Figure 13-C-2 shows the routing of the storm event, including the water level in the underpass throughout the duration of the storm.

The performance of the system has also been evaluated for 2-year and 10-year storms. During a 2-year event, calculations show that no ponding will occur in the underpass. Even during a 10-year storm, calculations show that the underpass will not pond to a level greater that 18".

PIPE SIZES

The gravity piping that carries the storm water from the underpass to the wet well will consist of three 14" ductile iron (DI) lines. DI is used because of the minimal amount of cover over the pipe as it passes under the road surface of the underpass. The three 14" lines will come together in a manhole. From the manhole, a 24" DI pipe will be installed to carry the runoff to the wet well. One 12" line will be installed to handle the 1 cfs of groundwater flow.

The force main from the lift station to the 60" storm drain line will be 12" in diameter. This will insure that the velocity in the force main is no more than 7 feet per second when all three pumps are operating.

CALCULATIONS:

Calculations for this report are based on the rational method of calculating storm water runoff. Data used in this analysis can be found in the Hydrology Chapter.

1) C VALUE CALCULATIONS

C values - Land use method - (See Hydrology Chapter)

Type of development:		C Value
Roofs	16,100 SF	0.95
Pavement/Concrete	58,700 SF	0.95
Gravel	73,000 SF	0.70
Grass	84,500 SF	
	232,300 SF	

It has been suggested MDT that the grass area be omitted from the calculations for both total area and when calculating the weighted average of the C value coefficients. This will result in more conservative design flow values, due to a shorter time of concentration.

Weighted average of C values:

$$\frac{(16{,}100*0.95)+(58{,}700*0.95)+(73{,}000*0.70)}{147{,}800 \text{ Total SF}}$$

$C_{avg.} = 0.826 \times C_f$

Note: C_f equals one for storms with frequencies less than 25 years.

2) TIME OF CONCENTRATION

Longest reach – East along Main Street - 465 feet, then south along First Ave. South - 210 feet.

Slope: Main Street – Pt. 1 elev. - 3299.51 ft
Pt. 2 elev. - 3298.79 ft
Distance Pt. 1 to Pt. 2 = 386 ft

(.72'/386')*100 = 0.186%

First Ave. South – Pt. 1 elev. - 3295.0 ft
Pt. 2 elev. - 3285.0 ft
Distance Pt. 1 to Pt. 2 = 155 ft

(10'/155')*100 = 6.45%

Velocity - Fig. 2-3 Billing Stormwater Management Manual.
Paved area @ 0.186% slope = .86 fps
Paved area @ 6.45% slope = 5.1 fps

T_C = (465ft/.86ft/s) + (210ft/5.1ft/s) * (1 min/60s) = 9.7 min
Use 10 min T_C

3) FLOW CALCULATIONS: Refer to Table 13-C-1.

A) Intensity - Intensity values from Appendix B, Hydrology Chapter, in inches per hour.

B) Total Rainfall - Total rainfall for a given frequency at a specific point in time, in inches.

((intensity)/60)*time

i.e.
5-year storm at time = 30 min
intensity at time 30 = 1.58 in/hr
((1.58 in/hr)/(60 min/hr))*30 min = 0.79 in

C) Incremental Rainfall - The amount of rainfall in inches that has fallen since the previous time increment.

(total rainfall @ T - total rainfall @ $T_{previous}$)/# of time increments between the T values)

i.e.
5-year storm at @15 min.
total rainfall @ 15 min = 0.65"
total rainfall @ 10 min = 0.53"
# of increments between values = 1.0
(0.65" - 0.53")/1 = 0.12"

D) Incremental Intensity - Intensity in inches per hour to be used throughout the duration of the time increment.

(incremental rainfall * 60 min per hour)/increment duration

i.e.
5-year storm @ 15 min
incremental rainfall @ 15 min = 0.12"
duration of increments = 5 min
(0.12 in * 60 min/hr)/5 min = 1.44 in/h

E) Hyetograph Position - The positioning of the intensities required to determine the S-Curve design storm pattern.

i.e.

incremental intensities - 4.58 in/hr
1.80 in/hr
1.44 in/hr
0.60 in/hr
0.60 in/hr

step 1 – Place largest value in the center of the storm. In this case there are five values. The center position is 3.

step 2 – Place the next largest value one position in front of the center position. In this case, position 2.

step 3 – Place the third largest value one position behind the center position. In this case, position 4.

step 4 – Repeat steps 2 and 3 placing one value in front and the next in back until all positions are filled.

Position# 1 - 0.60 in/hr
2 - 1.80 in/hr
3 - 4.58 in/hr
4 - 1.44 in/hr
5 - 0.60 in/hr

For the remaining calculations for the 5-year storm, refer to Table 13-C-3

F) Intensity - The storm intensities are organized according to the position determined in part E and spread out over the increment duration of 5 minutes each.

G) Contributing Area - Determined in part 2 of these calculations.

Because the time of concentration is 10 minutes, the entire area will not be contributing to the inlet until the time of concentration has passed. To account for this the contributing area was reduced linearly according to the time, for all times less than 10 minutes.

i.e.

total area = 3.38 acres
time of concentration = 10 min
(3.38 acres/10min) = .338 acres/min

H) Average Intensity - Average intensity is the average of the intensities for the preceding time values, over a period of time equal to the time of concentration.

(sum of preceding intensities/time of concentration)

i.e.

5-year @ time 26
time of concentration = 10 min
intensities - @ time 26 - 4.58
25 - 1.80
24 - 1.80
23 - 1.80
22 - 1.80
21 - 1.80
20 - 0.60
19 - 0.60
18 - 0.60
17 - 0.60

(4.58in/hr + (1.80in/hr * 5)+(0.60in/hr *4)/10
Average Intensity @ time 26 = 1.598 in/hr

I) Flow - Determined using the rational equation Q=CIA.

i.e.

5-year storm at time 15
C = 0.826 determined previously
A = 3.38 acres
I = 0.360 in/hr
Q = 0.826*3.38*0.360
Q = 1.005 cfs

J) Groundwater Inflow - As discussed earlier, there is assumed to be a constant flow of groundwater into the wet well of 1 cfs.

K) Flow Rate Into Wet Well - This is the total of the groundwater inflow flow rate and the flow rate of the storm.

L) Outflow - Outflow is equivalent to one or more of the pumps operating. Design is based on three 800 gpm pumps, so the outflow should be as follows.

1 pump on - (800 gpm) =1.78 cfs
2 pumps on = 1.78 cfs * 2 = 3.56 cfs
3 pumps on = 1.78 cfs * 3 = 5.34 cfs

M) Required storage - This is the total volume of storm water which has entered the area and has not been pumped out, in cubic feet.

((Inflow - Outflow)*(60 s))+(previously stored volume).

i.e.

5-year storm at time 35 min
flow at time 35 = 9.40 cfs
outflow at time 35 = 5.34 cfs - three pumps running
volume at time 34 = 3005 ft^3

(9.40 cfs - 5.34 cfs)*(60 s) + 3005 ft^3
volume = 3249 ft^3

N) Wet Well depth - Used to determine the elevation of the water level in the wet well. This information is used to determine how many pumps will be operating based on the elevation that the floats are set. The depth of the storm water in the wet well after the wet well has reached capacity was calculated using Table 13-C-3, by locating the storage required in the total column and interpolating between the values to find the depth of water measured from the bottom of the wet well.

i.e.

5-year storm at time 25
required storage volume at time 25 - 1054 ft^3
unit storage volume of 17' dia. wet well = 227 ft^3/vertical foot
depth of wet well = 1054 ft^3/(227 ft^3/vertical foot)
depth = 4.64 vf

5-year storm at time 35
required total storage volume at time 35 - 3249 ft^3
from Table 13-C-4 - depth of wet well is between 9.0 ft and 9.1 ft.
Interpolation yields a depth of approximately 9.01 ft

O) Underpass depth - This is the depth of storm water in the underpass basin at a given time. This is calculated using the same procedure as used to calculate the depth in the wet well. It should be noted that at a wet well depth of 8.2', the depth of storm water in the underpass is approximately equal to 0.1'.

5-year storm at time 35
depth of wet well is 9.01 feet
Underpass depth is 9.01- 8.1 = 0.91 feet

4) Gravity Pipe Line Sizing:

Manning's equation $Q = (1.49/n)*(slope^{0.5})*AR^{2.67}$
Re-writing, in terms of diameter, for a pipe flowing full
$Q = (1.49/n)*(slope^{0.5})*0.3117d^{2.67}$

A) Groundwater Line

Slope = 0.20%
n = 0.014
for Q = 1.0 cfs, $d^{2.67} = 0.674$
$d=(.674)^{.375}$
d=.86 ft = 10.34 inches use 12" pipe.

B) First Pipe Section - 3 lines

flow = 8.91cfs/3 = 2.97 cfs per line
slope = .35%
n = .014
$d^{2.67} = 1.51$
$d=(1.51)^{.375}$
d= 1.167 ft = 14" use 14" pipe

C) Second Section of Pipe - 1 line

flow = 8.91 cfs
slope = .35%
n = .014
$d^{2.67} = 4.54$

$d=(4.54)^{.375}$

d= 1.764 ft = 21.2" use 24" pipe

D) Line between MH 1 and MH 2

flow = 5.94 cfs
slope = .35%
n = .014
$d^{2.67} = 3.03$

Solving Mannings equation for dia. we have:

$d = (3.03)^{.375}$

d = 1.514 ft = 18.2" use 20" pipe

6) FORCE MAIN LINE SIZING

Q=AV
velocity = 7 fps
flow = 5.34 cfs - max discharge with all three pumps operating

5.34 cfs = (3.14*(r^²))*(7fps)
r = .49 ft
d = .98 ft = 11.76" use 12" pipe

7) TOTAL DYNAMIC HEAD

A) Loss through 6" discharge piping.

Q=AV
Q=1.78 cfs
A=.1963 sf
$V=\frac{1.78\text{ cfs}}{.1963\text{ sf}}=9.07$ ft/sec

$H_L = (1.816/C)^{1.852}*(L/D^{1.167})*(V)^{1.852}$ (Hazen-Williams equation)

$H_L = (1.816/120)^{1.852}*(100/.5^{1.167})*(9.07)^{1.852}$ (Hazen-Williams C = 120)

H_L = 5.68 ft/100 lf of pipe

Total linear feet of pipe = 36 ft.
Equivalent pipe diameters for fittings

3 - 90's @ 50	= 150
1 - Check Valve @135	= 135
1 - Plug Valve @ 18	= 18
1 - Cross @ 60	= 60
	363 pipe diameters

363 pipe diameters * .5 ft diameter= 182 lf of pipe
182 lf + 36 lf = 218 equivalent feet
2.18 * 5.68 = 12.68 ft of head

B) Loss through 12" discharge piping.

$H_L = (1.816/C)^{1.852}*(L/D^{1.167})*(V)^{1.852}$

$H_L = (1.816/120)^{1.852}*(100/1^{1.167})*(7)^{1.852}$

H_L = 1.176 ft/100 lf of pipe

Total length of pipe = 983 ft.
Equivalent pipe diameters for fittings

3 - 90's @ 50	= 50
1 - Check Valve @5	= 10
1 - Plug Valve @ 18	= 18
1 - Cross @ 16	= 16
	94 pipe diameters

94 pipe diameters * 1 ft diameter = 94 lf of pipe
94 lf +983 lf= 1,077 equivalent feet
10.77 * 1.176 = 12.67 ft of head

C) Velocity Loss = $V^2/2g = (9.07)^2/64.4$ = 1.28 ft

D) Elevation Head = 12.7 ft.

E) Total Dynamic Head= 12.38 +12.67+1.28+12.7 = 39.03 ft use 40 feet

Figure 13–C–1
Groundwater Inflow

Time (min)	Groundwater Inflow (cfs)	Pumped Outflow (cfs)	Required storage (ft^3)	Wet Well Depth (ft)	Pump Operation
1	1.0	0.00	60	0.26	
2	1.0	0.00	120	0.53	
3	1.0	0.00	180	0.79	
4	1.0	0.00	240	1.06	
5	1.0	0.00	300	1.32	
6	1.0	0.00	360	1.59	
7	1.0	0.00	420	1.85	
8	1.0	0.00	480	2.11	
9	1.0	0.00	540	2.38	
10	1.0	0.00	600	2.64	
11	1.0	0.00	660	2.91	
12	1.0	0.00	720	3.17	
13	1.0	1.78	673	2.97	Pump 1 on
14	1.0	1.78	626	2.75	
15	1.0	1.78	579	2.55	
16	1.0	1.78	532	2.35	
17	1.0	1.78	485	2.14	
18	1.0	1.78	438	1.93	
19	1.0	1.78	391	1.73	
20	1.0	1.78	344	1.52	
21	1.0	0.00	404	1.79	Pump 1 off
22	1.0	0.00	464	2.05	
23	1.0	0.00	524	2.32	
24	1.0	0.00	584	2.58	
25	1.0	0.00	644	2.84	
26	1.0	0.00	704	3.11	
27	1.0	1.78	657	2.90	Pump 2 on
28	1.0	1.78	610	2.70	
29	1.0	1.78	563	2.49	
30	1.0	1.78	516	2.28	
31	1.0	1.78	469	2.08	
32	1.0	1.78	422	1.87	

Figure 13–C–1
Groundwater Inflow

Time (min)	Groundwater Inflow (cfs)	Pumped Outflow (cfs)	Required storage (ft^3)	Wet Well Depth (ft)	Pump Operation
33	1.0	1.78	375	1.67	
34	1.0	1.78	328	1.46	
35	1.0	0.00	388	1.72	Pump 2 off
36	1.0	0.00	448	1.99	
37	1.0	0.00	508	2.25	
38	1.0	0.00	568	2.52	
39	1.0	0.00	628	2.78	
40	1.0	0.00	688	3.05	
41	1.0	1.78	641	2.84	Pump 3 on
42	1.0	1.78	594	2.63	
43	1.0	1.78	547	2.43	
44	1.0	1.78	500	2.22	
45	1.0	1.78	453	2.01	
46	1.0	1.78	406	1.81	
47	1.0	1.78	359	1.60	
48	1.0	1.78	312	1.40	
49	1.0	0.00	372	1.66	Pump 3 off
50	1.0	0.00	432	1.92	
51	1.0	0.00	492	2.19	
52	1.0	0.00	552	2.45	
53	1.0	0.00	612	2.72	
54	1.0	0.00	672	2.98	
55	1.0	1.78	625	2.78	Pump 1 on
56	1.0	1.78	578	2.57	
57	1.0	1.78	531	2.36	
58	1.0	1.78	484	2.16	
59	1.0	1.78	437	1.95	
60	1.0	1.78	390	1.74	

Figure 13–C–2
5–Year Storm Routing

Time (min)	Rainfall Intensity (in/hr)	Contributing Area (acres)	Average Intensity (in/hr)	Flow Rate (cfs)	Groundwater Inflow (cfs)	Total Flow (cfs)	Pumped Outflow (cfs)	Required Storage (ft^3)	Wet Well Depth (ft)	Underpass Depth (ft)
1	0.12	0.338	0.12	0.03	1.0	1.03	0.00	402	1.77	0.00
2	0.12	0.676	0.12	0.07	1.0	1.07	0.00	466	2.06	0.00
3	0.12	1.014	0.12	0.10	1.0	1.10	0.00	532	2.35	0.00
4	0.12	1.352	0.12	0.13	1.0	1.13	0.00	600	2.65	0.00
5	0.12	1.690	0.12	0.17	1.0	1.17	0.00	670	2.95	0.00
6	0.24	2.028	0.14	0.24	1.0	1.23	0.00	744	3.28	0.00
7	0.24	2.366	0.15	0.30	1.0	1.30	1.78	715	3.15	0.00
8	0.24	2.704	0.17	0.37	1.0	1.37	1.78	697	3.05	0.00
9	0.24	3.042	0.17	0.44	1.0	1.44	1.78	676	2.95	0.00
10	0.24	3.380	0.18	0.50	1.0	1.50	1.78	659	2.88	0.00
11	0.48	3.380	0.22	0.60	1.0	1.60	1.78	649	2.83	0.00
12	0.48	3.380	0.25	0.70	1.0	1.70	1.78	644	2.81	0.00
13	0.48	3.380	0.29	0.80	1.0	1.80	1.78	645	2.82	0.00
14	0.48	3.380	0.32	0.90	1.0	1.90	1.78	652	2.85	0.00
15	0.48	3.380	0.36	1.00	1.0	2.00	1.78	665	2.91	0.00
16	0.60	3.380	0.40	1.11	1.0	2.11	1.78	685	3.00	0.00
17	0.60	3.380	0.43	1.21	1.0	2.21	1.78	711	3.11	0.00
18	0.60	3.380	0.47	1.31	1.0	2.31	1.78	743	3.25	0.00
19	0.60	3.380	0.50	1.41	1.0	2.41	1.78	781	3.42	0.00
20	0.60	3.380	0.54	1.51	1.0	2.51	1.78	824	3.61	0.00
21	1.80	3.380	0.67	1.88	1.0	2.88	1.78	890	3.90	0.00
22	1.80	3.380	0.80	2.24	1.0	3.24	1.78	978	4.29	0.00
23	1.80	3.380	0.94	2.61	1.0	3.61	3.56	981	4.30	0.00
24	1.80	3.380	1.07	2.98	1.0	3.98	3.56	1006	4.41	0.00
25	1.80	3.380	1.20	3.35	1.0	4.35	3.56	1054	4.64	0.00
26	4.58	3.380	1.60	4.46	1.0	5.46	3.56	1168	5.12	0.00
27	4.58	3.380	2.00	5.57	1.0	6.57	3.56	1348	5.92	0.00
28	4.58	3.380	2.39	6.68	1.0	7.68	5.34	1489	6.54	0.00
29	4.58	3.380	2.79	7.79	1.0	8.79	5.34	1696	7.00	0.00
30	4.58	3.380	3.19	8.91	1.0	9.91	5.34	1970	7.65	0.00
31	1.44	3.380	3.15	8.81	1.0	9.81	5.34	2238	8.31	0.21
32	1.44	3.380	3.12	8.70	1.0	9.70	5.34	2500	8.61	0.51

Figure 13–C–2
5–Year Storm Routing

Time (min)	Rainfall Intensity (in/hr)	Contributing Area (acres)	Average Intensity (in/hr)	Flow Rate (cfs)	Groundwater Inflow (cfs)	Total Flow (cfs)	Pumped Outflow (cfs)	Required Storage (ft^3)	Wet Well Depth (ft)	Underpass Depth (ft)
33	1.44	3.380	3.08	8.60	1.0	9.60	5.34	2755	8.76	.066
34	1.44	3.380	3.05	8.50	1.0	9.50	5.34	3005	8.91	0.81
35	1.44	3.380	3.01	8.40	1.0	9.40	5.34	3249	9.01	0.91
36	0.60	3.380	2.61	7.29	1.0	8.29	5.34	3426	9.10	1.00
37	0.60	3.380	2.21	6.18	1.0	7.18	5.34	3536	9.15	1.05
38	0.60	3.380	1.82	5.07	1.0	6.07	5.34	3580	9.17	1.07
39	0.60	3.380	1.42	3.60	1.0	4.96	5.34	2557	9.16	1.06
40	0.60	3.380	1.02	2.85	1.0	3.85	5.34	3468	9.12	1.02
41	0.24	3.380	0.90	2.51	1.0	3.51	5.34	3358	9.07	0.97
42	0.24	3.380	0.78	2.18	1.0	3.18	5.34	3228	9.00	0.90
43	0.24	3.380	0.66	1.84	1.0	2.84	5.34	3078	8.94	0.84
44	0.24	3.380	0.54	1.51	1.0	2.51	5.34	2908	8.87	0.76
45	0.24	3.380	0.42	1.17	1.0	2.17	5.34	2718	8.74	0.64
46	0.12	3.380	0.37	1.04	1.0	2.04	5.34	2520	8.62	0.52
47	0.12	3.380	0.32	0.90	1.0	1.90	5.34	2314	8.43	0.33
48	0.12	3.380	0.28	0.77	1.0	1.77	5.34	2100	7.96	0.00
49	0.12	3.380	0.23	0.64	1.0	1.64	5.34	1878	7.44	0.00
50	0.12	3.380	0.18	0.50	1.0	1.50	5.34	1647	6.90	0.00
51	0.12	3.380	0.17	0.47	1.0	1.47	5.34	1415	6.22	0.00
52	0.12	3.380	0.16	0.44	1.0	1.44	5.34	1181	5.19	0.00
53	0.12	3.380	0.14	0.40	1.0	1.40	5.34	945	4.15	0.00
54	0.12	3.380	0.13	0.37	1.0	1.37	5.34	706	3.10	0.00
55	0.12	3.380	0.12	0.33	1.0	1.33	5.34	466	2.04	0.00
56	0.12	3.380	0.12	0.33	1.0	1.33	5.34	225	0.98	0.00
57	0.12	3.380	0.12	0.33	1.0	1.33	0.00	305	1.33	0.00
58	0.12	3.380	0.12	0.33	1.0	1.33	0.00	385	1.68	0.00
59	0.12	3.380	0.12	0.33	1.0	1.33	0.00	465	2.04	0.00
60	0.12	3.380	0.12	0.33	1.0	1.33	0.00	545	2.39	0.00

Figure 13–C–3
5–Year Storm
Hyetograph Development

Time (min)	Intensity (in/hr)	Total Rainfall (in)	Incremental Rainfall (in/increment)	Incremental Intensity (in/hr)	Hyetograph Position
5	4.58	0.38	0.38	4.58	6
10	3.19	0.53	0.15	1.80	5
15	2.58	0.65	0.12	1.44	7
20			0.05	0.60	4
25			0.05	0.60	8
30	1.58	0.79	0.04	0.48	3
35			0.02	0.24	9
40			0.02	0.24	2
45			0.01	0.12	10
50			0.01	0.12	1
55			0.01	0.12	11
60	0.87	0.87	0.01	0.12	12

Figure 13–C–4 Storage Volumes (Cubic Feet)				
Depth (ft)	**Wet Well (ft^3)**	**Pipe (ft^3)**	**Underpass (ft^3)**	**Total (ft^3)**
6.5	1475.4	0.0	0.0	1475.4
6.6	1498.1	19.9	0.0	1518.0
6.7	1520.8	39.7	0.0	1560.5
6.8	1543.5	59.6	0.0	1603.1
6.9	1566.2	79.5	0.0	1645.7
7.0	1588.9	99.4	0.0	1688.3
7.0	1611.6	119.2	0.0	1730.8
7.1	1634.3	139.1	0.0	1773.4
7.2	1657.0	159.0	0.0	1816.0
7.3	1679.7	178.9	0.0	1858.6
7.4	1702.4	198.8	0.0	1901.2
7.5	1725.1	218.6	0.0	1943.7
7.6	1747.8	238.5	0.0	1986.3
7.7	1770.5	258.4	0.0	2028.9
7.8	1793.2	278.3	0.0	2071.5
7.9	1815.9	298.1	0.0	2114.0
8.0	1838.6	318.0	0.0	2156.6
8.1	1861.3	318.0	0.0	2179.3
8.2	1884.0	318.0	17.7	2219.7
8.3	1906.7	318.0	28.2	2252.9
8.4	1929.4	318.0	56.5	2303.9
8.5	1952.1	318.0	120.1	2390.2
8.6	1974.8	318.0	204.8	2497.6
8.7	1997.5	318.0	356.7	2672.2
8.8	2020.2	318.0	490.9	2829.1
8.9	2042.9	318.0	639.2	3000.1
9.0	2065.6	318.0	858.1	3241.7
9.1	2088.3	318.0	1041.8	3448.1
9.2	2111.0	318.0	1239.5	3668.5
9.3	2133.7	318.0	1455.0	3906.7
9.4	2156.4	318.0	1772.8	4247.2

Figure 13–C–4 Storage Volumes (Cubic Feet)				
Depth (ft)	**Wet Well (ft^3)**	**Pipe (ft^3)**	**Underpass (ft^3)**	**Total (ft^3)**
9.5	2179.1	318.0	2020.0	4517.1
9.6	2201.8	318.0	2291.9	4811.7
9.7	2224.5	318.0	2578.0	5120.5
9.8	2247.2	318.0	2991.2	5556.4
9.9	2269.9	318.0	3319.6	5907.5
10	2292.6	318.0	3665.7	6276.3
10.1	2315.3	318.0	4156.5	6789.8
10.2	2338	318.0	4548.5	7204.5
10.3	2360.7	318.0	4954.7	7633.4
10.4	2383.4	318.0	5385.5	8086.9
10.5	2406.1	318.0	5982.3	8706.4
10.6	2428.8	318.0	6480.3	9227.1

Appendix D – Example Detention Pond Calculations

This example is for a 3.2 acre development in Miles City. The drainage area was included in the original area for the storm drain system, but based on a runoff coefficient for the undeveloped site. The flow contribution allocated to this area was 1.7 cfs for a 2-year design storm. This was established as the criteria to be used for allowable discharge from an on-site detention pond.

The first step is to make an estimate of the required pond size. This estimate is based on the total runoff for a one-hour period. The 2-year, one-hour rainfall for Miles City is 0.61 inches (see Appendix B of the Hydrology Chapter). For a 3.2 acre site, with a runoff coefficient of 0.95, the flow rate would be 0.95 * 0.61 * 3.2 = 1.85 cfs, or 6,660 cubic feet. Site conditions restrict the pond to a maximum depth of about 2 feet, so a working depth of 1.5 feet will be used. The table below is used to determine the rainfall hyetograph. Time increments should be equal to (or shorter than) the time of concentration.

Time	Rainfall Intensity (in./hr.)	Total Rainfall Amount (in.)	Incremental Rainfall Amount (in.)	Incremental Rainfall Intensity (in./hr.)
10 min.	2.07	0.35	0.35	2.07
20 min		0.44	0.09	0.54
30 min.	1.04	0.52	0.08	0.48
40 min.		0.55	0.03	0.18
50 min.		0.58	0.03	0.18
60 min.	0.61	0.61	0.03	0.18

Note: Rainfall intensity values determined as follows: two-year, 1 hour precipitation value of 0.61 determined from Appendix B of Hydrology Chapter; two-year, 10-minute intensity value determined by multiplying one-hour value by 3.4, in accordance with Appendix B of Hydrology Chapter; two-year 30-minute intensity value determined by multiplying one-hour value by 1.7, in accordance with Appendix B of Hydrology Chapter. Two-year, 20-minute, 40-minute and 50-minute total rainfall amounts were determined by straight-line interpolation.

The table below is used to determine the inflow hydrograph for the detention pond. The flows are computed using the rational equation, with a drainage area of 3.2 acres, a runoff coefficient of 0.95, and the rainfall intensity indicated.

Time	Incremental Rainfall Intensity (in./hr.)	Incremental Flow (cfs)	Incremental Volume (ft^3)	Total Volume (ft^3)
10 min.	2.07	6.29	3774	3774
20 min.	0.54	1.64	984	4758
30 min.	0.48	1.46	876	5634
40 min.	0.18	0.55	330	5964
50 min.	0.18	0.55	330	6294
60 min.	0.18	0.55	330	6624

The stage-storage-discharge relationship for the detention pond needs to be established. Using a total volume of 6600 cubic feet and a working depth of 1.5 feet, an approximate stage storage relationship is shown below.

Depth	Storage Volume, ft^3
0.0	0
0.5	2200
1.0	4400
1.5	6600

To achieve a discharge of 1.7 cfs with a head of 1.5 feet, an 8 inch pipe will be required. Using a simple HY-8 analysis, the stage discharge relationship for this outlet is shown below.

Depth	Discharge, cfs
0.0	0.0
0.5	0.6
1.0	1.3
1.5	1.8

A simple routing procedure then determines the maximum pond size:

Time	Inflow Volume (ft^3)	Inflow + Storage (ft^3)	Depth (ft)	Outflow (cfs)	Outflow Volume (ft^3)	Storage Volume (ft^3)
10 min.	3774		0.86	1.10	660	3114
20 min.	984	4098	0.93	1.20	720	3378
30 min.	876	4254	0.97	1.26	756	3498
40 min.	330	3828	0.87	1.12	672	3156
50 min.	330	3486	0.79	1.01	606	2880
60 min.	330	3210	0.73	0.92	552	2658

The maximum storage volume is 3498 cubic feet. This is the required pond size, at a depth of 1.5 feet. The computation could be repeated with a modified stage storage relationship, to provide a final analysis. This method does make some simplifying assumptions, but they are generally not significant. The table above also indicates that the peak storage occurs very early in the rainfall event, so a longer duration event would not increase the required storage volume. This will generally be true for short return period events, but may not be the case for longer return period events.

Simplified Method

A simplified method for detention pond sizing is described in the Billings Stormwater Management Manual. The previous example is re-computed using this simplified method. This simplified method should not be used for drainage areas larger than 2 acres, but is shown here for comparison purposes.

The example is for a drainage area of 3.2 acres in Miles City, with a time of concentration of 10 minutes. The design frequency is 2 years, and the runoff coefficient is 0.95. The simplified method uses an assumed constant release rate (equal to the allowable rate of 1.7 cfs), which accounts for much of the error in using this simplfied method.

Rainfall Duration (min.)	Rainfall Intensity (in,/hr.)	Peak Runoff (cfs)	Storm Runoff Volume (ft^3)	Release Flow Volume (ft^3)	Required Storage Volume (ft^3)
10	2.07	6.29	3774	1020	2754
20	1.32	4.01	4812	2040	2772
30	1.04	3.16	5688	3060	2628
40	0.83	2.52	6048	4080	1968
50	0.70	2.13	6390	5100	1280
60	0.61	1.85	6660	6120	540

Note: Rainfall intensity values determined as follows: 2-year, 1 hour precipitation value of 0.61 determined from Appendix B of Hydrology Chapter. 2-year, 10-minute intensity value determined by multiplying one-hour value by 3.4, in accordance with Appendix B of Hydrology Chapter. 2-year 30-minute intensity value determined by multiplying one-hour value by 1.7, in accordance with Appendix B of Hydrology Chapter. 2-year, 20-minute, 40-minute and 50-minute intensity values determined by straight-line interpolation of rainfall amounts (not intensities), then converted back to intensities. For example, the 30 minute rainfall amount is 0.52 inches, and the 60 minute rainfall amount is 0.61 inches. A straight line interpolation of these amounts yields a 50 minute rainfall

amount of 0.58 inches, which yields an intensity of 0.70 inches per hour. A straight line interpolation of intensity would yield an intensity of 0.75 inches per hour, which would require 0.62 inches of rain to fall in 50 minutes, while only 0.61 inches of rain falls in 60 minutes. While the differences are small in this example, they can be significant in some cases.

The maximum storage volume in this example is 2772 cubic feet. The more complete analysis indicates the required storage volume is 3498 cubic feet.

Discharge Structure Considerations

There are a number of considerations in design of a discharge structure. A pipe sized to carry the design discharge at the design stage is the simplest form of structure. In some cases, an orifice plate has been installed in a discharge structure to limit the flow, but this is not as reliable as a pipe, may cause more maintenance problems. All discharge structures should be reviewed to determine how they will function during larger rainfall events. Control of pollutants (oil, grease and sediments) should also be considered, both during the design event and during larger events.

Appendix E – Storm Drain Policy

This Storm Drain Policy was adopted November 23, 1988. It is reproduced here exactly as adopted, in its entirety, for reference purposes. Also included after the policy is a January 13, 1989 clarification memo, without the attachments.

STORM DRAIN POLICY
PRIMARY SYSTEM

PURPOSE:

The purpose of this policy is to ensure that our very limited primary funding is spent for highway improvements and not for drainage systems that do not benefit the primary highway system. The Department recognizes the desirability of and need for stormwater drainage systems in cities and other built-up areas, but because of limited primary highway funding as compared to the vast needs, the non-highway portion of stormwater drainage systems must be funded from other sources.

APPLICATION:

This policy will apply to all projects on the Federal Aid Primary System in incorporated cities and towns and in unincorporated communities and built-up areas.

While each project must be considered separately and on its own merits based on sound engineering criteria, this policy will be followed to the extent possible.

POLICY:

It is the policy of the Department of Highways to incorporate drainage facilities into highway construction projects to accommodate existing runoff as well as anticipated runoff resulting from future developments. These facilities shall be commensurate with the scope of work and available funding as well as potential risks. In evaluating these facilities, consideration shall be given to potential maintenance problems, roadway stability, safety and convenience of the road use, and flood hazard potentials for the highway and adjacent property.

When a primary highway project is proposed through an area with an underground drainage system that is adequate to handle flow from the project, appropriate inlet facilities and laterals will be provided as a part of the project to adequately drain the project into the existing system provided that the owner of the drainage system will allow the necessary connections.

When a primary highway project is proposed in an area that has surface drainage or inadequate underground facilities, major drainage courses can be piped under the project and local drainage can be designed to flow along and/or across the project on the surface, or and underground system can be provided, depending on the situation. If it is decided to provide an underground system, it should be limited to highway drainage or, if there is non-highway area contributing to the underground system, the city or county should share in the cost proportional to their portion of the estimated flows. Urban funds can sometimes be used to fund some of the local share if some of the flow comes from the urban system. Allowances can be made for existing and future surface runoff that naturally enters the highway right-of-way and which would require drainage features.

When a city or other local governing body desires to provide an underground drainage system at about the same time that the Department is proposing a primary highway project, the project will include appropriate inlet and lateral facilities and the project will be charged a proportional share of the cost of the outfall facilities. The proportional share will be based on the estimated flow from the project as compared to the total estimated flow from the drainage project. Allowances can be made for surface runoff that naturally enters the highway right-of-way and which would require design features.

When a city or other local governing body desires to provide an underground drainage system in an area that has primary highway facilities that are not programmed for improvement, proportional highway funding may be available to contribute to the drainage project provided that:

1. Federal Aid Primary or RTF funds are available, and
2. The Department has determined that the proposed improvements have priority, and
3. The primary highway share of the cost does not exceed the benefits accruing to the primary highway facility, and
4. The primary highway share of the cost does not exceed the proportion of the estimated flow from the primary highway facility to the total estimated flow from the drainage project. Allowances can be made for surface runoff that naturally enters the highway and which would require design features.

Cities are usually better able to handle the maintenance of storm drain systems and should be encouraged to do so in storm drain negotiations. Where cities are willing to assume maintenance of storm drain systems that include flow from the primary system, that should be considered in the negotiations to determine the proportional share of highway funding.

After the facility is built and in service, care must be taken to ensure that the capacity of the system is maintained. Additional hook ups or tie ins, whether public or private, will not be allowed unless the system was originally designed to accommodate the additional flow and the applicant either shared in the cost of the system initially, or is willing to pay at the time of the tie in, the proportional cost of the original system.

STORM DRAIN POLICY
URBAN AND SECONDARY SYSTEMS

PURPOSE:

The purpose of this policy is to encourage cities and counties to spend their allocations of the very limited federal aid urban and secondary funds for highway and street improvements and not for drainage systems that do not benefit the urban and secondary highway systems.

The Department recognizes the role of cities and counties in establishing priorities for the expenditure of urban and secondary funds. The Department also recognizes the desirability of and need for stormwater drainage systems in cities and other built up areas. But because of the small amount of federal aid urban and secondary funding as compared to the vast need for urban and secondary streets and highways, the non-highway portion of stormwater drainage systems should be funded from other sources.

APPLICATION:

This policy will apply to all projects on the Federal Aid Urban and Secondary System in incorporated cities and towns and in unincorporated communities and built up areas.

While each project must be considered separately and on its own merits based on sound engineering criteria, this policy will be followed to the extent possible.

POLICY:

It is the policy of the Department of Highways to incorporate drainage facilities into highway construction projects to accommodate existing runoff as well as anticipated runoff resulting from future developments. These facilities shall be commensurate with the scope of work and available funding as well as potential risks. In evaluating these facilities, consideration shall be given to potential maintenance problems, roadway stability, safety and convenience of the road use, and flood hazard potentials for the highway and adjacent property.

When an urban or secondary highway project is proposed through an area with an underground drainage system that is adequate to handle flow from the project, appropriate inlet facilities and laterals will be provided as a part of the project to adequately drain the project into the existing system provided that the owner of the drainage system will allow the necessary connections.

When an urban or secondary highway project is proposed in an area that has surface drainage or inadequate underground facilities, major drainage courses can be piped under the project and local drainage can be designed to flow along and/or across the project on the surface, or and underground system can be provided, depending on the situation. If it is decided to provide an underground system, it should be limited to highway drainage from the project. If there is a non-project area providing stormwater to the underground system such that larger than a minimum sized storm drain line is needed, the city or county will be encouraged to find other sources of funding to pay that portion of the storm drain cost that is proportional to the non-project portion of the total estimated flow. The federal aid project share of storm drain cost cannot be more than is eligible for federal aid participation as determined by the Federal Highway Administration.

When a city or other local governing body desires to provide an underground drainage system at about the same time that an urban or secondary project is being proposed, the project will include appropriate inlet and lateral facilities and the project will be charged a proportional share of the cost of the outfall facilities. The city or county will be encouraged to limit the proportional share charged to the project to the proportion of the estimated flow from the project as compared to the total estimated flow from the drainage project. That proportional share cannot exceed what is eligible for federal aid participation as determined by the Federal Highway Administration.

When a city or other local governing body desires to provide an underground drainage system in an area that has urban or secondary routes that are not programmed for improvement, highway funding may be available to contribute to the drainage project, provided that:

1. Funds on the appropriate system are available, and
2. The City and/or City-County have assigned the proposed improvements a priority for the expenditure of federal aid secondary or urban funds, and
3. The County and/or City-County are encouraged to limit the proportional federal aid share in the project to the proportion of the flow from the highway facilities as compared to the total flow from the entire drainage project, and
4. The highway share does not exceed what is eligible for federal aid participation as determined by the Federal Highway Administration.

After the facility is built and in service, care must be taken to ensure that the capacity of the system is maintained. Additional hook ups or tie ins, whether public or private, will not be allowed unless the system was originally designed to accommodate the additional flow and the applicant either shared in the cost of the system initially, or is willing to pay at the time of the tie in, the proportional cost of the original system.

MONTANA DEPARTMENT OF HIGHWAYS
Helena, Montana 59620

MEMORANDUM

TO: Hydraulic Unit Designer

FROM: Carl S. Peil, P.E.
Manager - Hydraulics Unit

RE: Storm Drain Policy

DATE: January 13, 1989

Attached is a copy of the Department's Storm Drain Policy as recently approved. Also attached are copies of FHWA guidance on joint funding of storm drainage systems. This material should be incorporated into your Hydraulics Manuals.

You will notice that separate policies have been written for primary system projects and secondary and urban system projects. The major difference between the two policies is that on:

1) primary system highways where funding is prioritized based upon statewide needs, cooperative storm drainage system participation ratios should be determined using a proration of discharges, whereas on,

2) secondary and urban roads where funds are allocated to the local area and prioritized by the local officials based upon their needs, cooperative storm drainage system participation ratios should also be determined using a proration of discharges, however, more liberal methods may be used, such as the "add on" method, where warranted.

Our responsibility and primary task is to provide drainage features to convey anticipated runoff, whether from natural drainage basins, developed areas or anticipated developed areas, across the highway using existing drainage courses whenever practical and possible. Where project characteristics warrant, storm drain systems should be provided. In these situations, early and continued coordination with the local officials is necessary to insure cooperative projects and funding are pursued in accordance with the policy wherever possible.

34-CSP:mb:5/f

Attachments

Appendix F – Minimum Cover for Concrete Pipes

The minimum cover for concrete pipes is shown in the table below. These values are absolute minimums, and more cover should be provided whenever possible. Values in this table were determined using the procedures described in "Concrete Pipe Handbook," published by the American Concrete Pipe Association, 1980. The values are for round reinforced concrete pipe, with HS20 live loads. They are the compilation of the worst case for the three scenarios including Trench Loading with Class B Bedding, Trench Loading with Class C Bedding, and Embankment Loading. For reinforced concrete arch pipe, the minimum cover will be equal to the minimum cover for the circular pipe whose outside diameter equals the outside span of the arch.

Pipe Diameter (inches)	Pipe Class			
	2	3	4	5
12	*	*	12"	6"
18	*	18"	6"	6"
24	*	12"	6"	6"
30	24"	6"	6"	6"
36	6"	6"	6"	6"
42	6"	6"	6"	6"
48	6"	6"	6"	6"
> 48	6"	6"	6"	6"

*** This class of pipe should not be used for the size noted, regardless of cover.**

Table F-1
Minimum Cover for Concrete Pipes

Appendix G – Water and Sanitary Sewer Line Design

MDT typically does very little water and sanitary sewer design. These limited designs are generally focused around conflicts with storm drains. On some urban reconstruction projects, the City will elects to include improvements to their utility lines in MDT's contract. In these situations, the design for the City's utilities are done by the City (or by a Consultant for the City), and the plans are incorporated into MDT's plans.

When designs are done by MDT, the Montana Public Works Standard Specifications should be referenced. Designs should incorporate the horizontal and vertical separations indicated in this document. Approval by the Department of Environmental Quality (DEQ) is generally required for all water and sanitary sewer modifications. Design references include the Water Quality Division Circulars, published by DEQ, American Water Works Assocation Standards for water systems, and Recommended Standards for Sewage Works (Ten State Standards) for sanitary sewer systems.

Appendix H – Storm Drain Profiles

When storm drains are included in MDT projects, a storm drain profile should be included in the construction plans. Figure 13-H-1 shows an example of a simple profile. The storm drain profile should include the following notes:

- **Rim elevation for access holes**
- **Invert elevation for each pipe in each access hole**
- **Pipe size, type (RCP IRR), length (measured from inside edge to inside edge of access holes) and slope (rounded to the nearest 0.01%)**
- **Grate elevation for inlets. The grate elevation should be the flow line of the concrete gutter (note - standard gutter is on a 4.17% slope, not a normal 2% crown.**
- **Invert elevation for inlets. This is necessary to determine the necessary depth of inlet, and is required even if standard depth inlets are to be used.**
- **Station and offset for access holes and inlets. Offset distances are measured to the center of the access hole or inlet. For Type 2 curb inlets, the center of the inlet is 11.5 inches from the back of the curb. For Type 4 drop inlets, the center of the inlet is 21.5 inches from the back of the curb.**
- **Station, size (if known), depth (if known) and type (water, sanitary sewer, natural gas, etc.) of utility crossed by the storm drain.**
- **A table including the station of each access hole, the length of pipe (inside edge to inside edge of access holes) to the nearest 0.1 foot (0.1 meter), and the bid length of pipe (centerline to centerline of access holes), rounded to the nearest 2 foot (0.5 meter) increment.**

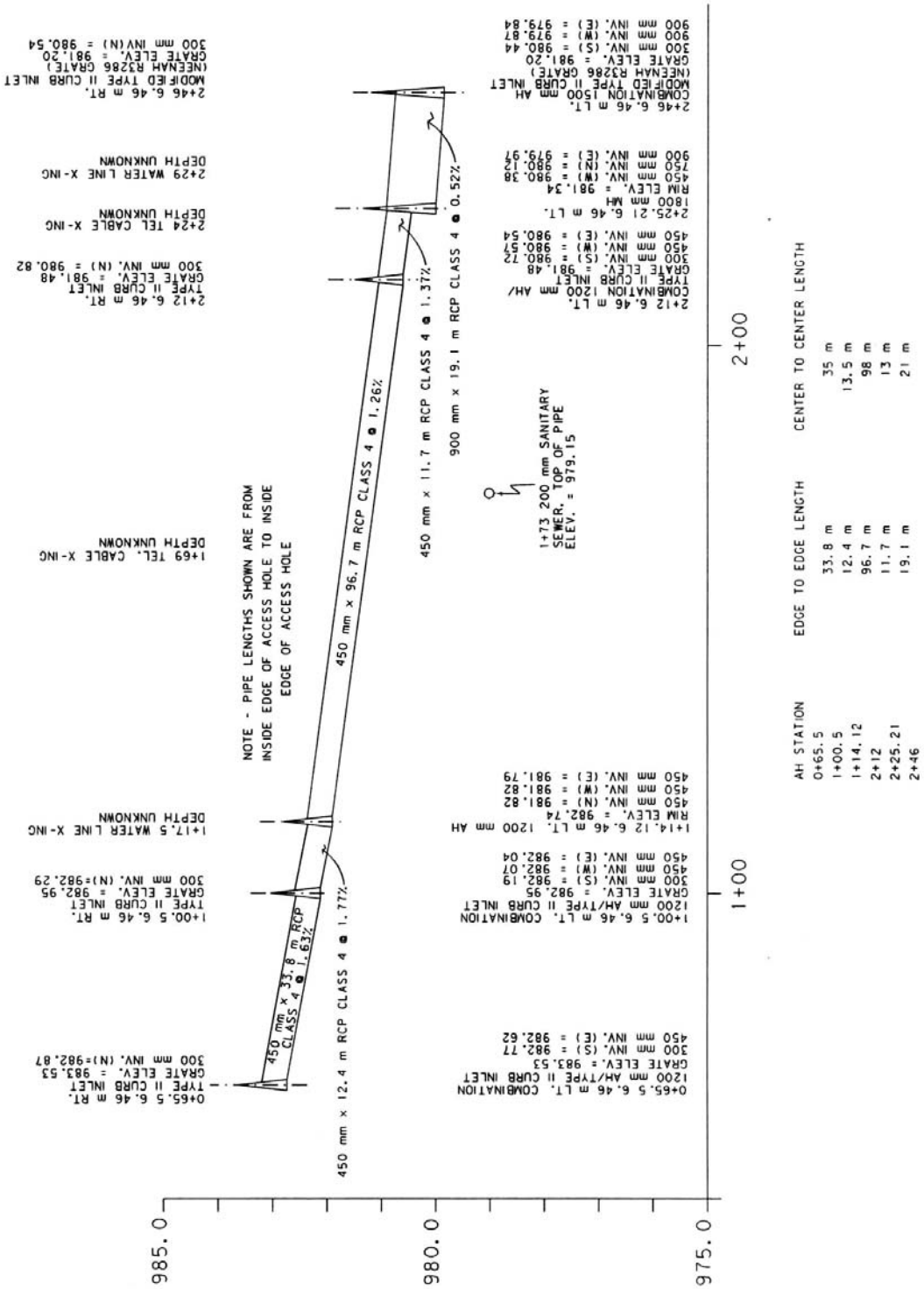

Figure 13-H-1
Example Storm Drain Profile

Appendix I – Rainfall Event Tables

This appendix has been included for information only, to detail the reasons for the choice of a 2-year, one hour design storm. This is for documentation only, and is not intended to be used as a design tool. An analysis of several hourly precipitation stations was completed in an attempt to determine the percentage of hourly events that were less than the return period events (2-year, 5-year, etc.). In an effort to analyze only rainfall events, only precipitation events from March 1 to October 31 were included. The table below lists the stations analyzed, and the percentage of hourly rainfall events that were less than the listed return period events.

	Billings	Glasgow	Great Falls	Havre	Helena	Kalispell	Missoula	Avg
% Less Than								
2 year	99.80	99.68	99.85	99.71	99.82	99.88	99.82	99.79
5 year	99.92	99.92	99.94	99.93	99.95	99.98	99.93	99.94
10 year	99.96	99.96	99.97	99.95	99.96	99.99	99.96	99.96
25 year	99.98	99.97	99.97	99.97	99.98	99.99	99.98	99.98
50 year	99.99	99.99	99.99	99.99	99.98	99.99	99.98	99.99
100 year	99.99	99.99	99.99	99.99	99.99	99.99	99.99	99.99
Period of Record	1948-1994	1957-1994	1948-1994	1948-1994	1948-1994	1953-1994	1948-1994	
Number of Events	13,674	7805	14,335	11,078	11,393	12,653	12,563	

In section 13.2.5, off-site development detention, a statement is made that detention basins should be sized to accommodate the one-hour design storm. The table below was developed to illustrate the reasons why a one-hour design storm was selected rather than the more commonly used six-hour or 24-hour design storms. Seven sites around Montana were selected to illustrate the comparative intensities of the one-hour, six-hour and 24 hour storms. The table shows that on the average, the one-hour intensity is three times the six-hour intensity, and eight times the 24-hour intensity. It also indicates that the total rainfall in one-hour is over half of the six-hour total, and one-third of the 24-hour total. When the one-hour storm is taken out of the six-hour storm, the remaining five hours have an average intensity of only 0.08 inches per hour. The one-hour storm represents the most intense portion of a rainfall event, and averaging this one-hour over a longer period results in a peak flow that is much too low for basins with short times of concentration. Durations longer than one hour should be used only when the time of concentration exceeds one hour or total retention is required.

Appendix I – Rainfall Event Tables (continued)

	Billings	Glasgow	Great Falls	Havre	Helena	Kalispell	Missoula	Avg
2-year 1-hour	0.54"	0.69"	0.58"	0.46"	0.47"	0.40"	0.38"	0.50"
2-year 6-hour	0.9"	1.2"	1.05"	1.0"	0.75"	0.8"	0.8"	0.93"
Total Rainfall, hours 2-6	0.36"	0.51"	0.47"	0.54"	0.28"	0.40"	0.42"	0.43"
Rainfall Intensity, hours 2-6	0.07	0.10	0.09	0.11	0.06	0.08	0.08	0.08
2-year 24-hour	1.4"	1.8"	1.7"	1.6"	1.3"	1.4"	1.2"	1.49"
Total Rainfall, hours 6-24	0.5"	0.6"	0.65"	0.6"	0.55"	0.6"	0.4"	0.56"
Rainfall Intensity, Hours 6-24	0.03	0.03	0.04	0.03	0.03	0.03	0.02	0.03
1-hour Average Intensity	0.54	0.69	0.58	0.46	0.47	0.40	0.38	0.50
6-hour Average Intensity	0.15	0.20	0.18	0.17	0.12	0.13	0.13	0.16
24-hour Average Intensity	0.06	0.08	0.07	0.07	0.05	0.06	0.05	0.06