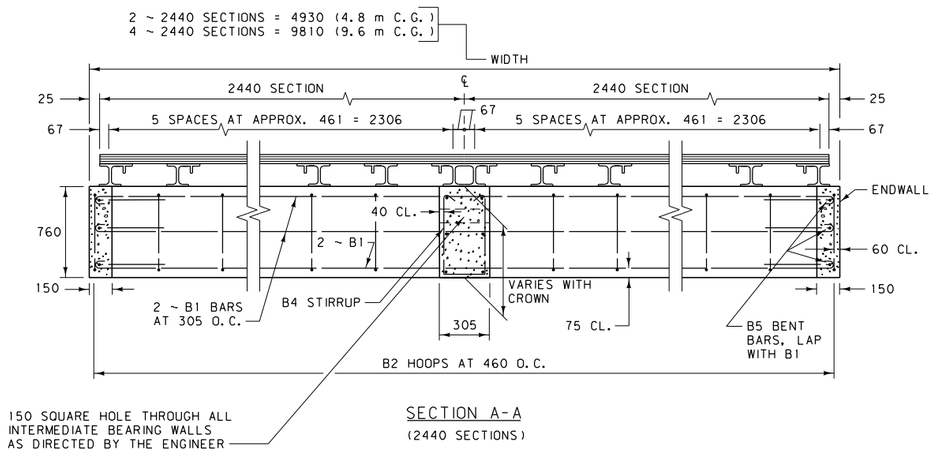

SECTION A-A

(2440 SECTIONS)

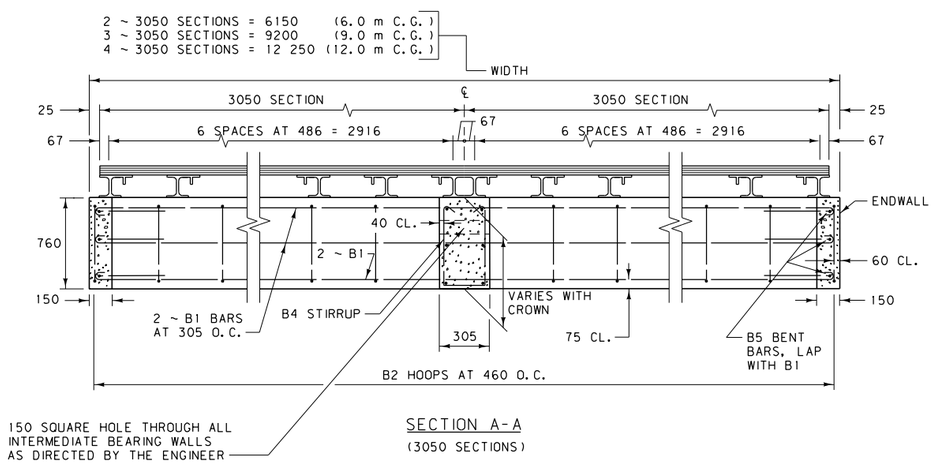

SECTION A-A

(3050 SECTIONS)

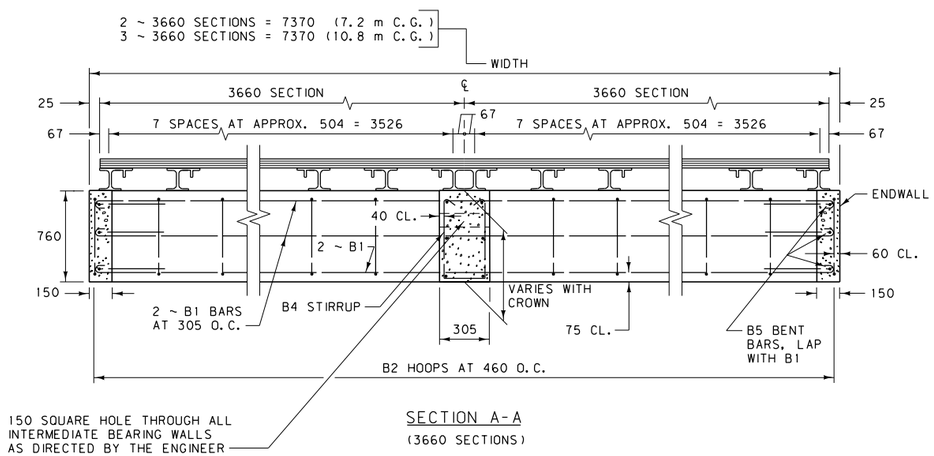

SECTION A-A

(3660 SECTIONS)

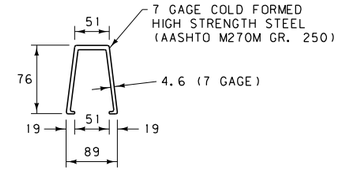

CROSSBAR

NOTE: WELD CROSSBARS TO 64 x 64 x 9.5 x 648 ANGLES HINGED AREA ONLY. SEE HINGE DETAIL.

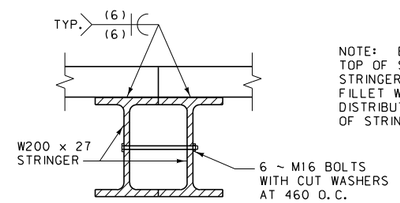

MULTIPLE INSTALLATION JOINT

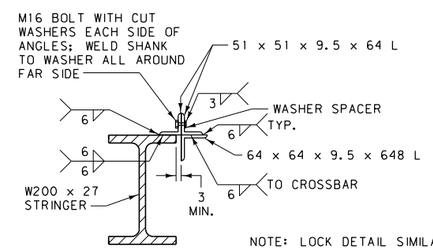

HINGE DETAIL

(HINGED AREA OPENS FOR CLEANOUT)

NOTE: LOCK DETAIL SIMILAR EXCEPT USE M16 GALV. MACHINED BOLT WITH GALV. CUT WASHER & GALV. HEX NUTS INSTEAD OF WELDED STUD BOLT.

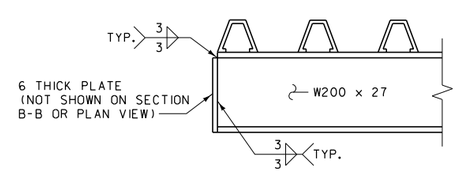

SECTION D

LIVE LOADING: STANDARD (HS20) LOADING

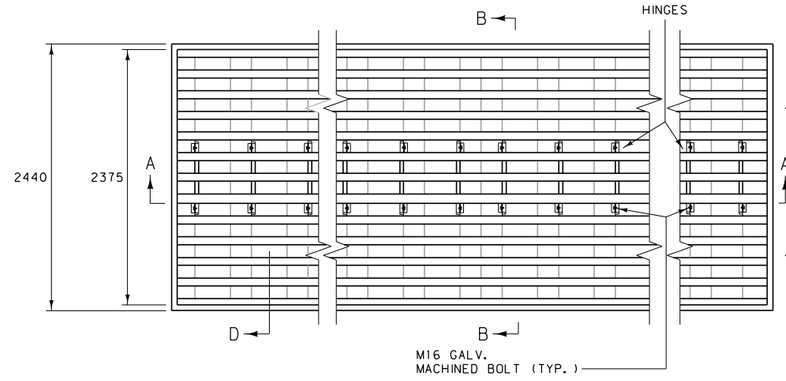

PLAN

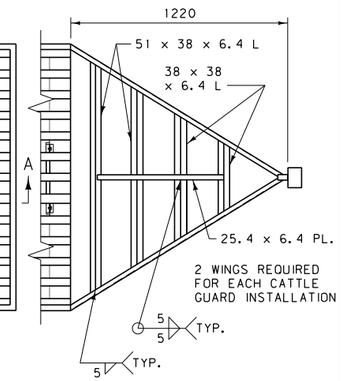

STEEL WING

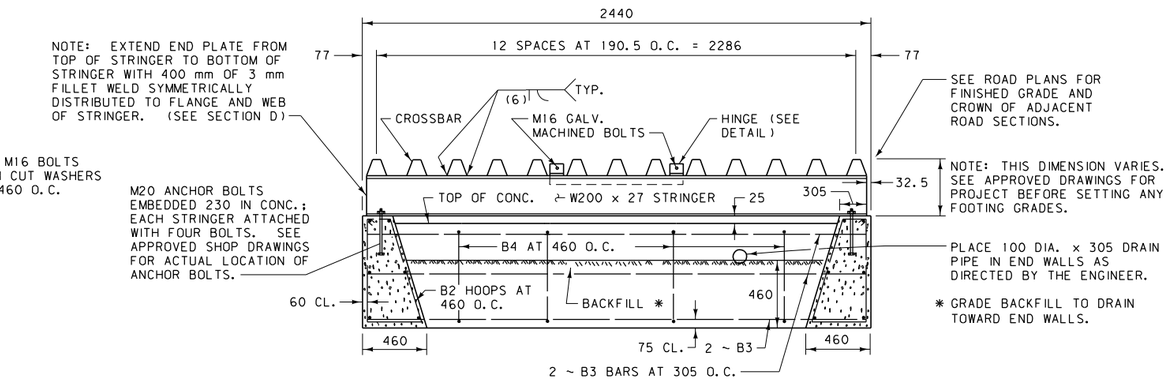

MAX. FOOTING PRESS = 105 kpa

SECTION B-B

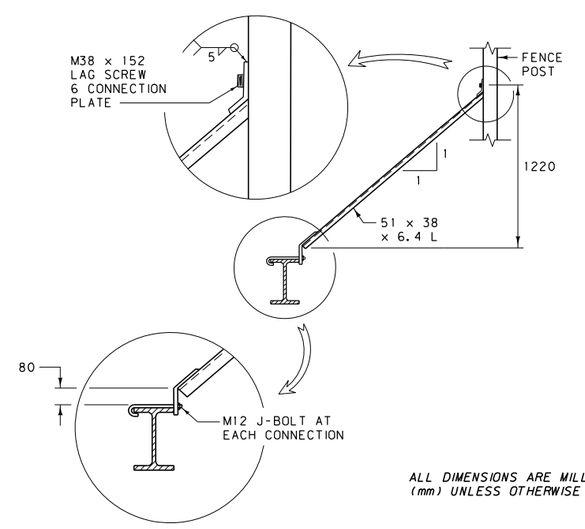

STEEL WING CONNECTION DETAILS

ALL DIMENSIONS ARE MILLIMETERS (mm) UNLESS OTHERWISE NOTED.

NOTES:

C.G. = CATTLE GUARD (METRIC C.G. SIZES ARE NOMINAL.)

THE CONTRACTOR HAS THE OPTION OF USING PRECAST CONCRETE BASES FOR CATTLE GUARDS. SEE DTL. DWG. NO. 611-15.

FOR CATTLE GUARDS ON FIELD OR PRIVATE APPROACHES, THE PRECAST CONCRETE BASES IN DTL. DWG. NO. 611-10 MAY BE USED.

USE AN EVEN NUMBER OF STEEL CATTLE GUARD GRATES WHEN A CROWNED INSTALLATION IS REQUIRED.

SEE DTL. DWG. NO. 611-05 FOR CAST-IN-PLACE CATTLE GUARD REBAR DETAILS.

STRUCTURAL STEEL IS TO CONFORM TO AASHTO M270M GRADE 250.

ANCHOR BOLTS ARE TO CONFORM TO AASHTO M314M GRADE 250.

ALL NUTS, BOLTS, AND WASHERS ARE TO CONFORM TO ASTM A307M AND BE GALVANIZED PER AASHTO M232M.

DETAILED DRAWING	
REFERENCE STANDARD SPEC. SECTION 611	DWG. NO. 611-00
CAST-IN-PLACE CATTLE GUARD	
EFFECTIVE: FEBRUARY 2005	

MDT serving you with pride — MONTANA DEPARTMENT OF TRANSPORTATION

BILL OF REINFORCING STEEL

BENT BARS (ALL DIMENSIONS ARE OUT TO OUT)

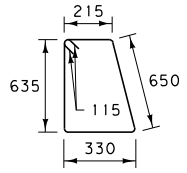

TYPE 1

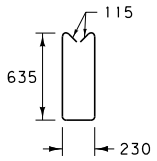

TYPE 2

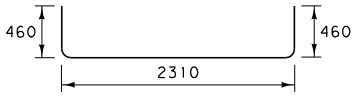

TYPE 3

4.8 m C.G.				
MARK	SIZE	NO.	TYPE	LENGTH
B1	#13	12	STR.	5105
B2	#13	22	1	2060
B3	#13	6	STR.	2310
B4	#13	4	2	1730
B5	#13	6	3	3230
ESTIMATED WT. = 145.6 kg				

9.0 m C.G.				
MARK	SIZE	NO.	TYPE	LENGTH
B1	#13	12	STR.	9375
B2	#13	42	1	2060
B3	#13	12	STR.	2310
B4	#13	8	2	1730
B5	#13	6	3	3230
ESTIMATED WT. = 258.1 kg				

6.0 m C.G.				
B1	#13	12	STR.	6325
B2	#13	28	1	2060
B3	#13	6	STR.	2310
B4	#13	4	2	1730
B5	#13	6	3	3230
ESTIMATED WT. = 172.8 kg				

9.6 m C.G.				
B1	#13	12	STR.	9980
B2	#13	44	1	2060
B3	#13	18	STR.	2310
B4	#13	12	2	1730
B5	#13	6	3	3230
ESTIMATED WT. = 290.3 kg				

7.2 m C.G.				
B1	#13	12	STR.	7545
B2	#13	34	1	2060
B3	#13	6	STR.	2310
B4	#13	4	2	1730
B5	#13	6	3	3230
ESTIMATED WT. = 199.6 kg				

10.8 m C.G.				
B1	#13	12	STR.	11200
B2	#13	50	1	2060
B3	#13	12	STR.	2310
B4	#13	8	2	1730
B5	#13	6	3	3230
ESTIMATED WT. = 296.6 kg				

12.0 m C.G.				
B1	#13	12	STR.	12420
B2	#13	54	1	2060
B3	#13	18	STR.	2310
B4	#13	12	2	1730
B5	#13	6	3	3230
ESTIMATED WT. = 339.7 kg				

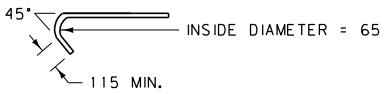

BENT BARS
(TYPES 1 AND 2)

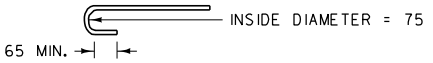

B1 AND B3 STRAIGHT BARS

REBAR DETAILS

NOTES:

C.G. = CATTLE GUARD (METRIC C.G. SIZES ARE NOMINAL.)

CONCRETE QUANTITIES WERE FIGURED WITHOUT A CROWN, INCREASE WHEN A CROWNED INSTALLATION IS USED.

ESTIMATED CLASS "A" CONC. QUANTITIES
4.8 m C.G. = 3.64 m³
6.0 m C.G. = 4.35 m³
7.2 m C.G. = 5.05 m³
9.0 m C.G. = 6.51 m³
9.6 m C.G. = 7.25 m³
10.8 m C.G. = 7.57 m³
12.0 m C.G. = 8.66 m³

ALL DIMENSIONS ARE MILLIMETERS (mm) UNLESS OTHERWISE NOTED.

DETAILED DRAWING

REFERENCE STANDARD SPEC. SECTION 611

DWG. NO. 611-05

CAST-IN-PLACE CATTLE GUARD REBAR DETAILS

EFFECTIVE: FEBRUARY 2005

MDT serving you with pride — MONTANA DEPARTMENT OF TRANSPORTATION

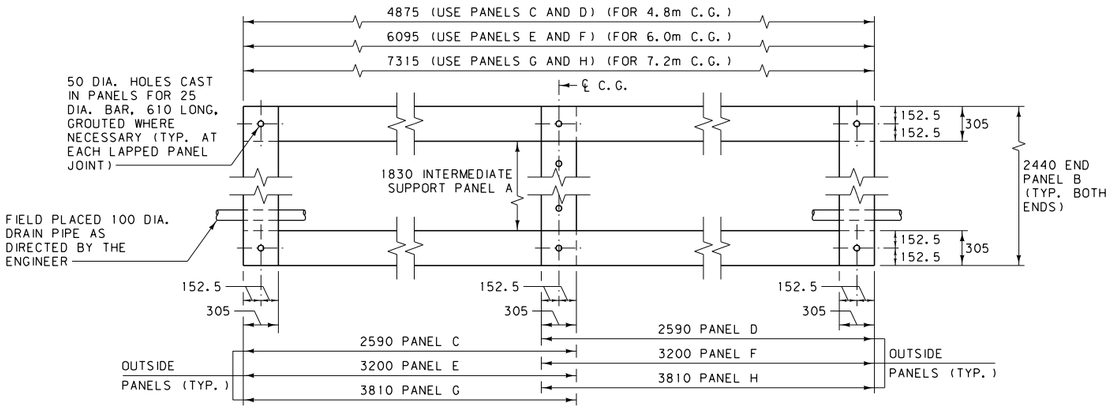

TYPICAL PLAN VIEW

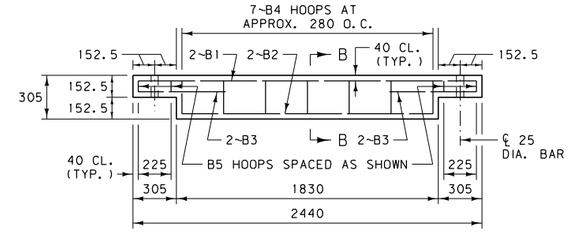

END PANEL B ELEVATION

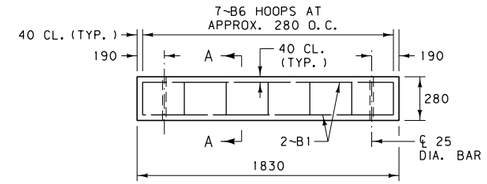

INTERMEDIATE SUPPORT PANEL A ELEVATION

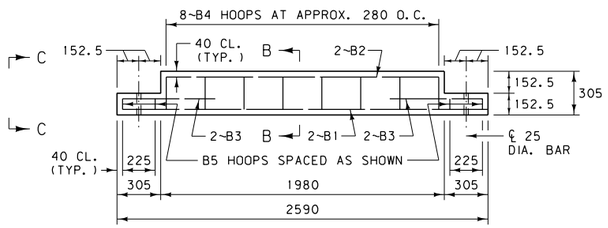

PANEL C ELEVATION

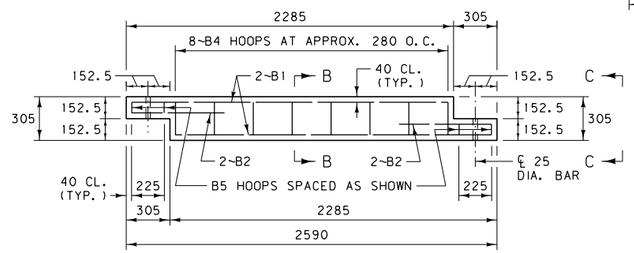

PANEL D ELEVATION

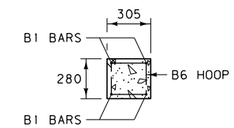

SECTION A-A

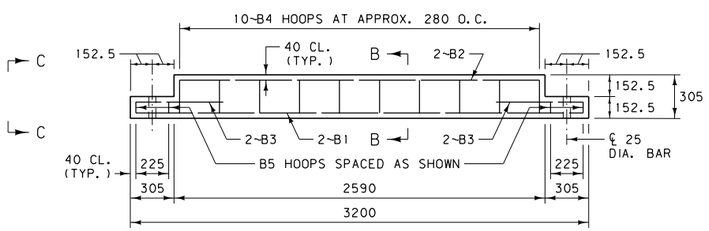

PANEL E ELEVATION

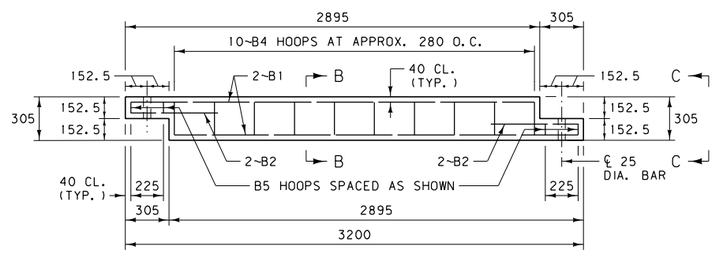

PANEL F ELEVATION

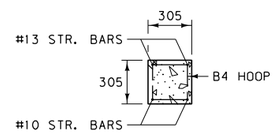

SECTION B-B

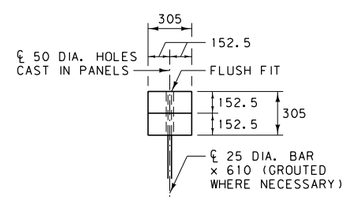

VIEW C-C

(TYP. LAPPED PANEL JOINT)

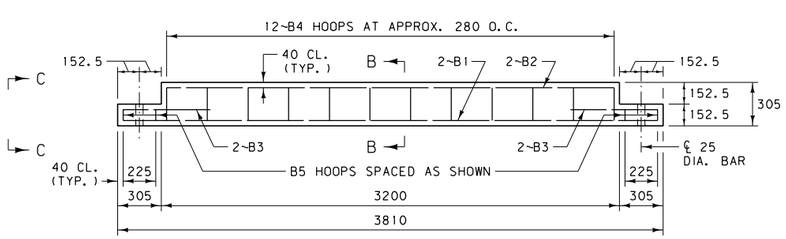

PANEL G ELEVATION

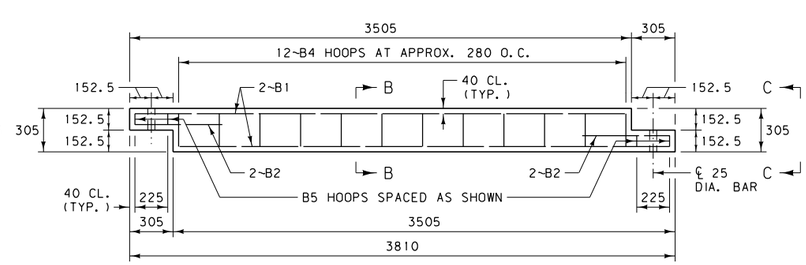

PANEL H ELEVATION

BILL OF REINFORCING STEEL *

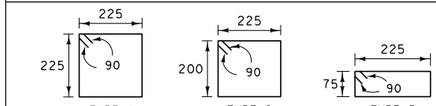

STRAIGHT BARS & BENT BARS (ALL DIMENSIONS OUT TO OUT)

MARK	SIZE	NO.	TYPE	LENGTH
1830 SECTION - PANEL A				
B1	#13	4	STRAIGHT	1750
B6	#10	7	2	1030
ESTIMATED WT. = 11.0 kg				
2440 SECTION - PANEL B				
B1	#13	2	STRAIGHT	2360
B2	#13	2	STRAIGHT	1750
B3	#13	4	STRAIGHT	660
B4	#10	7	1	1080
B5	#10	4	3	780
ESTIMATED WT. = 16.8 kg				
2590 SECTION - PANEL C				
B1	#13	2	STRAIGHT	2510
B2	#13	2	STRAIGHT	1900
B3	#13	4	STRAIGHT	660
B4	#10	8	1	1080
B5	#10	4	3	780
ESTIMATED WT. = 18.0 kg				
2590 SECTION - PANEL D				
B1	#13	4	STRAIGHT	2205
B2	#13	4	STRAIGHT	660
B4	#10	8	1	1080
B5	#10	4	3	780
ESTIMATED WT. = 18.0 kg				
3200 SECTION - PANEL E				
B1	#13	2	STRAIGHT	3120
B2	#13	2	STRAIGHT	2510
B3	#13	4	STRAIGHT	660
B4	#10	10	1	1080
B5	#10	4	3	780
ESTIMATED WT. = 21.6 kg				
3200 SECTION - PANEL F				
B1	#13	4	STRAIGHT	2815
B2	#13	4	STRAIGHT	660
B4	#10	10	1	1080
B5	#10	4	3	780
ESTIMATED WT. = 21.6 kg				
3810 SECTION - PANEL G				
B1	#13	2	STRAIGHT	3730
B2	#13	2	STRAIGHT	3120
B3	#13	4	STRAIGHT	660
B4	#10	12	1	1080
B5	#10	4	3	780
ESTIMATED WT. = 25.2 kg				
3810 SECTION - PANEL H				
B1	#13	4	STRAIGHT	3425
B2	#13	4	STRAIGHT	660
B4	#10	12	1	1080
B5	#10	4	3	780
ESTIMATED WT. = 25.2 kg				

* FOR ONE PANEL ONLY

ESTIMATED CLASS "D" CONCRETE QUANTITIES
1830 SECTION - PANEL A = 0.16 m³
2440 SECTION - PANEL B = 0.20 m³
2590 SECTION - PANEL C = 0.21 m³
2590 SECTION - PANEL D = 0.21 m³
3200 SECTION - PANEL E = 0.27 m³
3200 SECTION - PANEL F = 0.27 m³
3810 SECTION - PANEL G = 0.33 m³
3810 SECTION - PANEL H = 0.33 m³

ALL DIMENSIONS ARE MILLIMETERS (mm) UNLESS OTHERWISE NOTED.

NOTES:

C.G. = CATTLE GUARD. (METRIC C.G. SIZES ARE NOMINAL)

USE ONLY ON FIELD OR PRIVATE APPROACHES.

PROVIDE CAST-IN ANCHOR BOLTS AS SHOWN IN DTL. DWG. NO. 611-00 AT THE APPROPRIATE LOCATIONS. CAST-IN LAG PLATES, SIMILAR TO THOSE SHOWN IN DTL. DWG. NO. 611-15, MAY ALSO BE USED.

FOR DETAILS OF STEEL GRATES AND STEEL WINGS SEE DTL. DWG. NO. 611-00.

DETAILED DRAWING

REFERENCE STANDARD SPEC. SECTION 611

DWG. NO. 611-10

PRECAST CONCRETE BASE FOR CATTLE GUARD - APPROACHES

EFFECTIVE: FEBRUARY 2005

MDT serving you with pride — MONTANA DEPARTMENT OF TRANSPORTATION

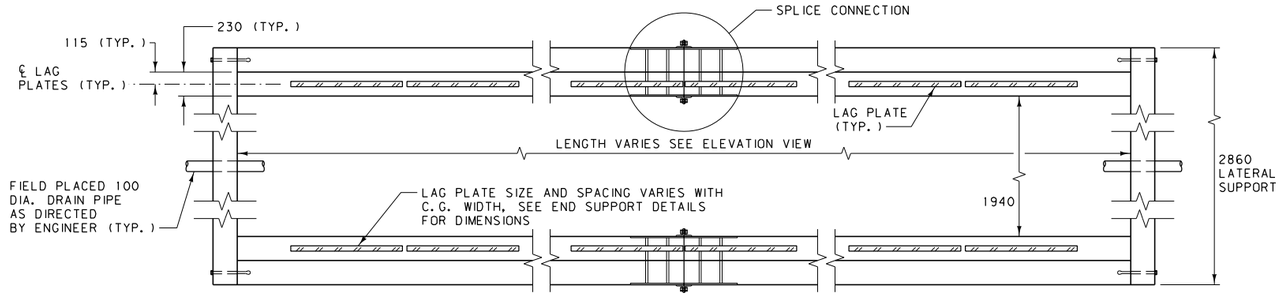

PLAN VIEW

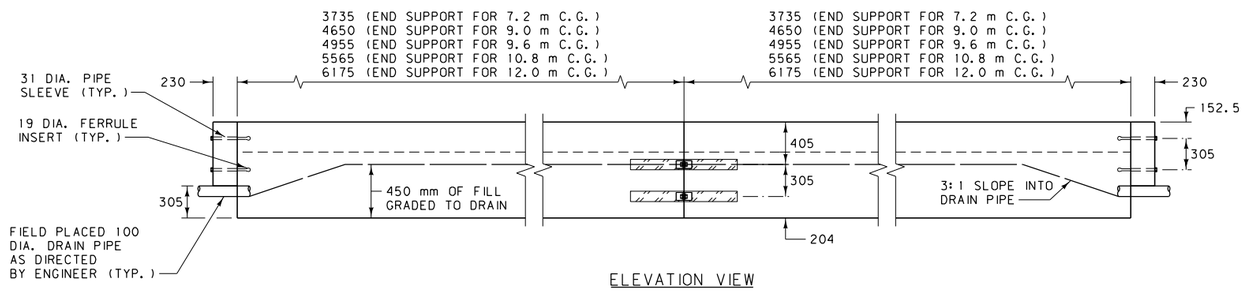

ELEVATION VIEW

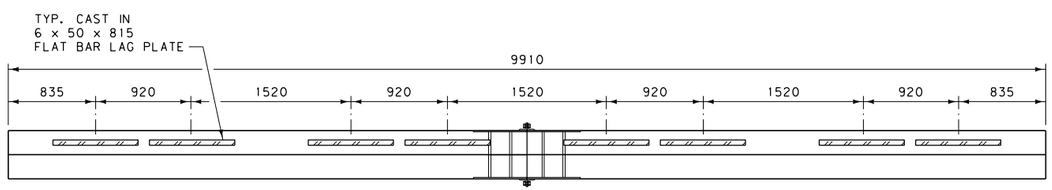

9.6 m C.G. END SUPPORT DETAIL

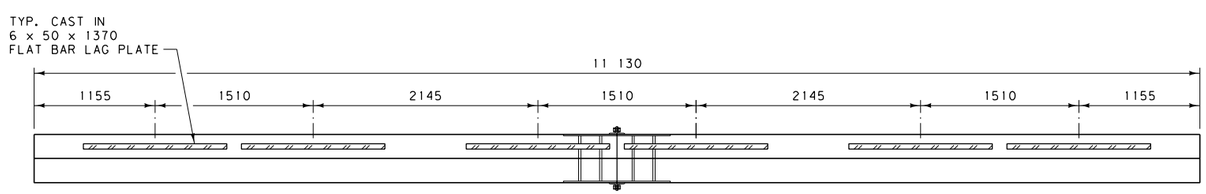

10.8 m C.G. END SUPPORT DETAIL

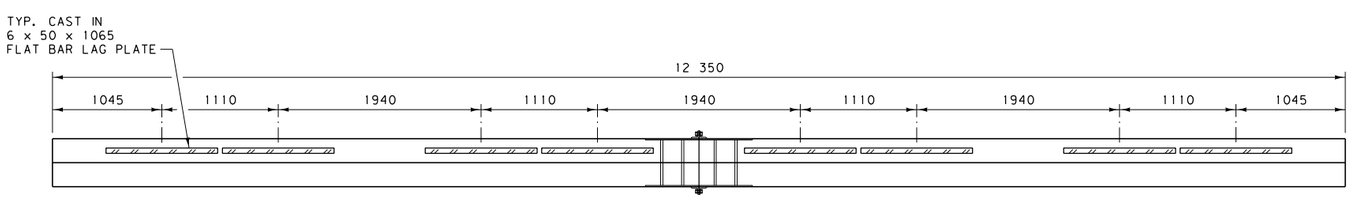

12.0 m C.G. END SUPPORT DETAIL

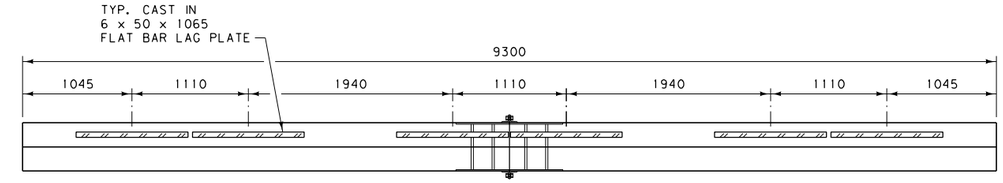

9.0 m C.G. END SUPPORT DETAIL

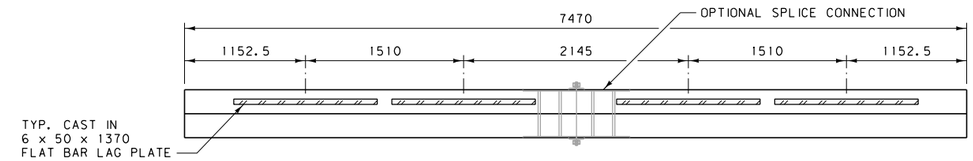

7.2 m C.G. END SUPPORT DETAIL

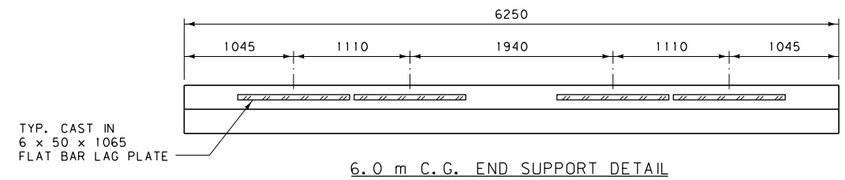

6.0 m C.G. END SUPPORT DETAIL

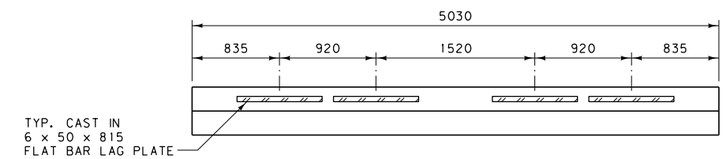

4.8 m C.G. END SUPPORT DETAIL

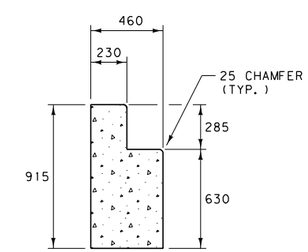

END SUPPORT SECTION VIEW

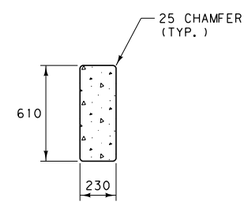

LATERAL SUPPORT SECTION VIEW

NOTES:

C.G. = CATTLE GUARD (METRIC C.G. SIZES ARE NOMINAL.)

USE SPLICE CONNECTIONS WHEN A CROWNED INSTALLATION IS REQUIRED.

SEE DTL. DWG. NO. 611-20 FOR ADDITIONAL PRE-CAST CONCRETE CATTLE GUARD BASE AND MATERIAL QUANTITY DETAILS.

SEE DTL. DWG. NO. 611-00 FOR DETAILS OF STEEL GRATES AND STEEL WINGS.

INSTALLATION PROCEDURE:

EXCAVATE 600 mm BELOW THE ELEVATION OF THE BOTTOM OF THE CATTLE GUARD BASE. EXTEND THE EXCAVATION HORIZONTALLY AT LEAST 300 mm IN ALL DIRECTIONS BEYOND THE CATTLE GUARD BASE'S EXTERIOR DIMENSION.

FILL THE EXCAVATION TO THE LEVEL OF THE BOTTOM OF THE CATTLE GUARD BASE WITH FILL MATERIAL OF AASHTO GRADE A-1-a OR BETTER, COMPACTED TO 95% OF PROCTOR DENSITY.

AFTER PLACING THE CATTLE GUARD, FILL THE EXTERIOR PORTION OF THE EXCAVATION TO GRADE WITH THE SAME MATERIAL.

FILL THE INTERIOR OF THE CATTLE GUARD BASE TO A DEPTH OF 450 mm WITH THE SIMILARLY COMPACTED MATERIAL.

ALL DIMENSIONS ARE MILLIMETERS (mm) UNLESS OTHERWISE NOTED.

DETAILED DRAWING	
REFERENCE STANDARD SPEC. SECTION 611	DWG. NO. 611-15
PRECAST CONCRETE BASE FOR CATTLE GUARD	
EFFECTIVE: FEBRUARY 2005	
serving you with pride	MONTANA DEPARTMENT OF TRANSPORTATION

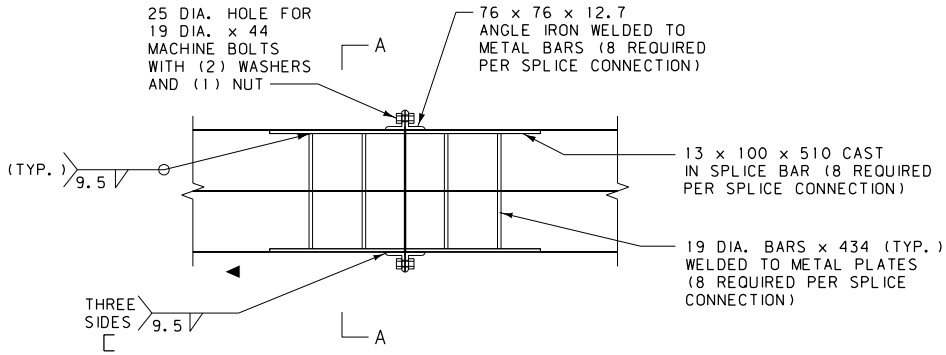

SPLICE CONNECTION DETAIL

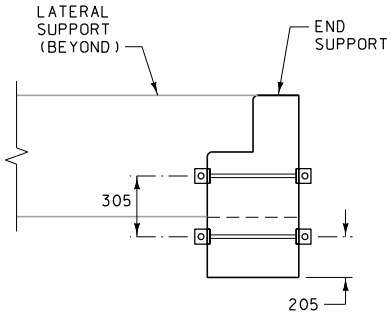

END SUPPORT SECTION A-A

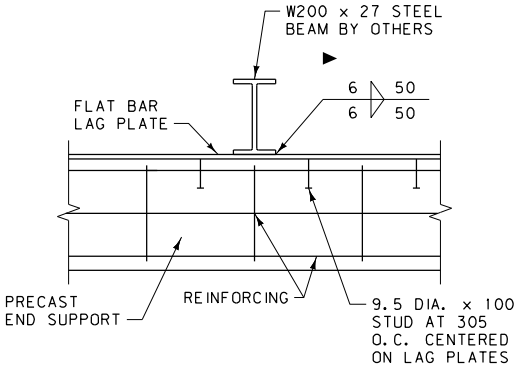

LAG PLATE CONNECTION DETAIL

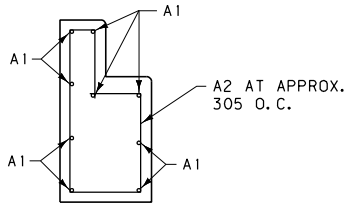

END SUPPORT REBAR DETAIL

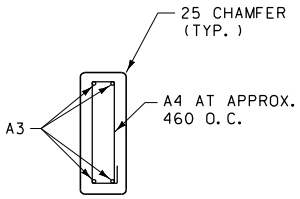

LATERAL SUPPORT REBAR DETAIL

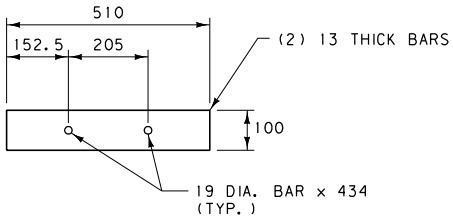

SPLICE BAR DETAIL

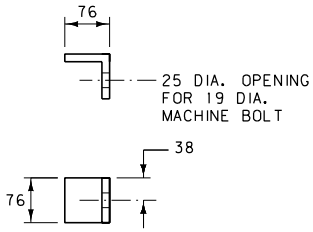

ANGLE IRON DETAIL

NOTE: ALL REBAR DIMENSIONS ARE OUT TO OUT.

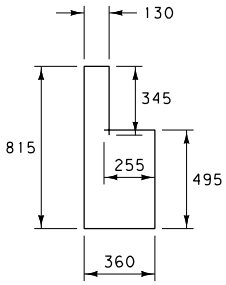

TYPE A2

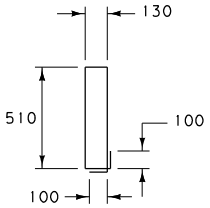

TYPE A4

REINFORCING STEEL

ESTIMATED CLASS "DD" CONCRETE QUANTITIES
4.8 m C.G. = 4.34 m³
6.0 m C.G. = 5.21 m³
7.2 m C.G. = 6.06 m³
* 7.2 m C.G. = 6.06 m³
9.0 m C.G. = 7.36 m³
9.6 m C.G. = 7.78 m³
10.8 m C.G. = 8.65 m³
12.0 m C.G. = 9.50 m³

NOTES:

C.G. = CATTLE GUARD (METRIC C.G. SIZES ARE NOMINAL.)

ALL HARDWARE IS TO BE PRIMER PAINTED.

ALL STEEL HARDWARE IS TO CONFORM TO AASHTO M270M GRADE 250.

ALL NUTS, BOLTS, AND WASHERS ARE TO CONFORM TO ASTM A307M AND BE GALVANIZED PER AASHTO M232M.

QUANTITIES AND DIMENSIONS ARE APPROXIMATE ONLY BASED ON ONE COMPLETE CATTLE GUARD.

NOMINAL C.G. SIZE	REINFORCING STEEL (NO. 13 BARS / GRADE 420)									MISC. STEEL			
	A1		A2		A3		A4		ESTIMATED WT.	LAG PLATES		SPLICE CONNECTION	ESTIMATED WT.
	REQUIRED	LENGTH	REQUIRED	LENGTH	REQUIRED	LENGTH	REQUIRED	LENGTH	kg.	REQUIRED	LENGTH		kg.
4.8 m	18	4930	36	2390	8	2780	14	1475	216.4	8	815	NO	17.7
6.0 m	18	6150	44	2390	8	2780	14	1475	257.2	8	1065	NO	23.6
7.2 m	18	7370	52	2390	8	2780	14	1475	298.0	8	1370	NO	29.9
* 7.2 m	36	3635	52	2390	8	2780	14	1475	296.2	8	1370	YES	146.5
9.0 m	36	4550	64	2390	8	2780	14	1475	357.4	12	1065	YES	151.5
9.6 m	36	4855	68	2390	8	2780	14	1475	377.8	16	815	YES	152.0
10.8 m	36	5465	76	2390	8	2780	14	1475	418.7	12	1370	YES	161.5
12.0 m	36	6075	84	2390	8	2780	14	1475	459.5	16	1065	YES	163.3

* 7.2 m CATTLE GUARD WITH OPTIONAL SPLICE

ALL DIMENSIONS ARE MILLIMETERS (mm) UNLESS OTHERWISE NOTED.

DETAILED DRAWING

REFERENCE STANDARD SPEC. SECTION 611

DWG. NO. 611-20

PRECAST CONCRETE CATTLE GUARD BASE DETAILS

EFFECTIVE: FEBRUARY 2005

MDT serving you with pride — MONTANA DEPARTMENT OF TRANSPORTATION