NOTES:

13 mm EXPANSION JOINTS ARE SHOWN AS DARK SOLID LINES FOR VISUAL PURPOSES.

BOND BREAKER IS SHOWN AS DARK DASHED LINES FOR VISUAL PURPOSES.

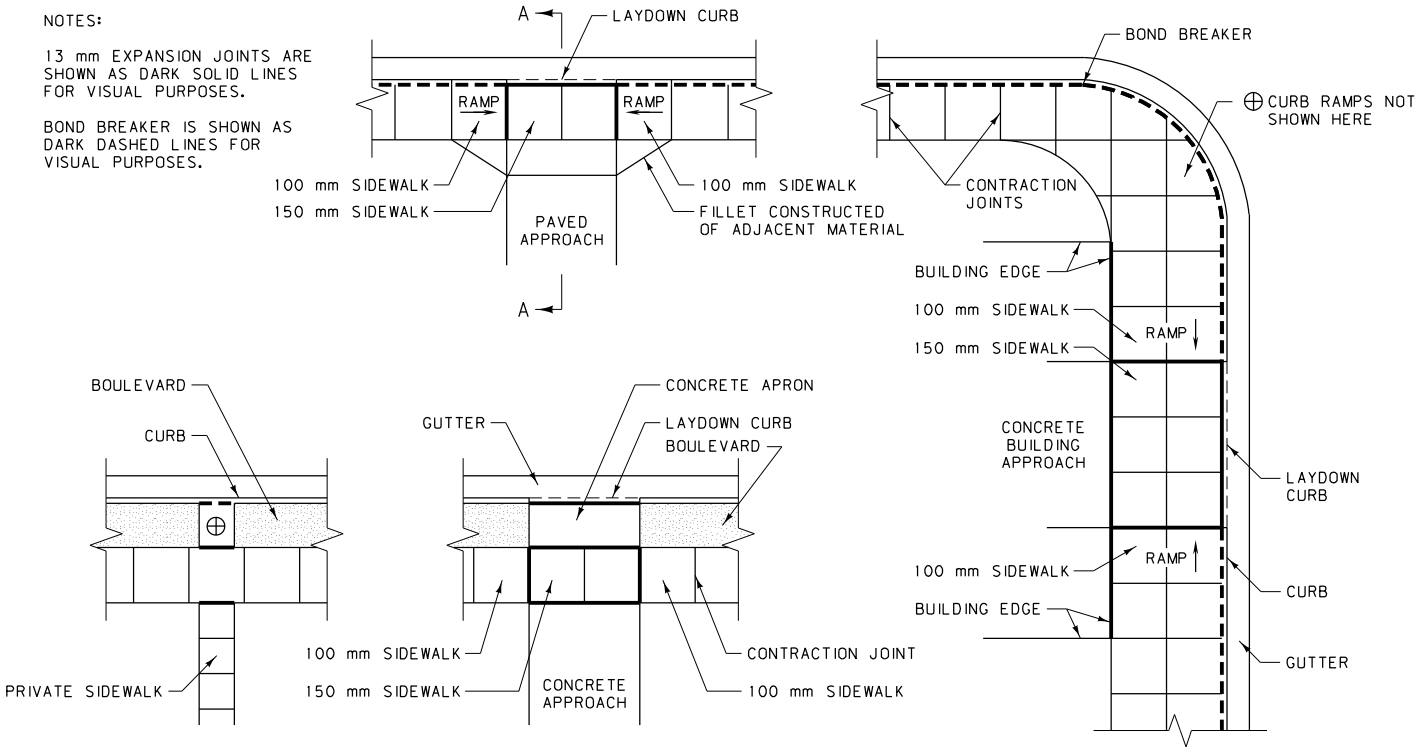

PLAN

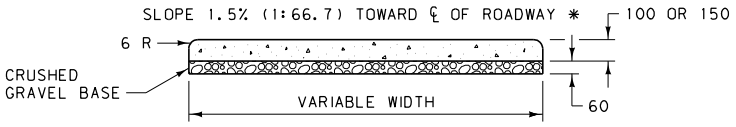

SECTION OF SIDEWALK

NOTE:
SEE DTL. DWG. NO. 609-05 FOR CURB & GUTTER DETAILS.

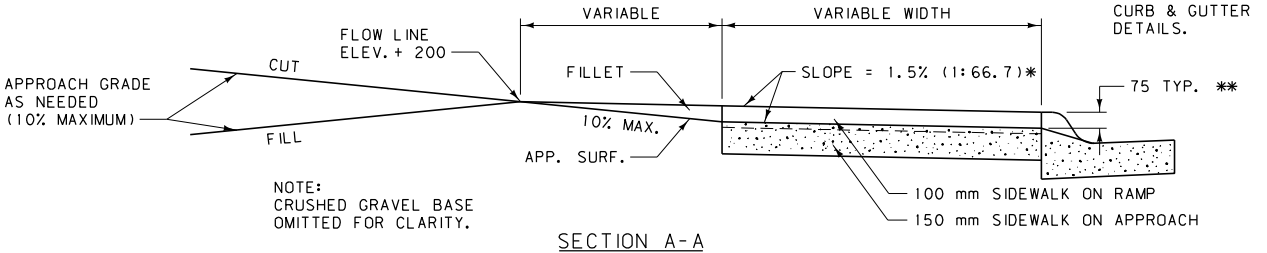

NOTE:
CRUSHED GRAVEL BASE OMITTED FOR CLARITY.

SECTION A-A

NOTES:

INSTALL PREFORMED EXPANSION JOINT FILLER, STD. SPEC. 707.01.3, AT ALL EXPANSION JOINTS, FOR THE FULL THICKNESS OF THE SIDEWALK AND USE AT ALL JOINTS BETWEEN NEW CONCRETE SIDEWALK AND STRUCTURES IN PLACE.

INSTALL A BOND BREAKER FOR THE FULL THICKNESS OF THE SIDEWALK AT LOCATIONS SPECIFIED ON THIS DETAIL. USE A 6.8 OR 13.6 KILOGRAM ROOFING FELT MATERIAL, OR OTHER PRODUCT AS APPROVED BY THE ENGINEER, FOR THE BOND BREAKER. DO NOT USE EXPANSION JOINT MATERIAL AS A BOND BREAKER.

ALL JOINTS MUST BE STRAIGHT AND PERPENDICULAR TO THE CENTERLINE AND THE SURFACE OF THE SIDEWALK. WHERE PRACTICAL, ALIGN ALL JOINTS WITH LIKE JOINTS IN ADJOINING WORK. USE JOINTS TO OUTLINE ALL PANELS IN THE SIDEWALK, WHICH ARE TO BE, SO FAR AS POSSIBLE, SQUARE. THE LENGTHS OF THE PANELS ARE DETERMINED BY THE WIDTH OF THE SIDEWALK.

WHERE RIGHT-OF-WAY PERMITS, NEW SIDEWALKS LESS THAN 1525 mm IN WIDTH MUST HAVE A PASSING AREA AT A MAXIMUM SPACING OF 61 m. THE PASSING AREA IS A MINIMUM OF 1525 mm BY 1525 mm IN SIZE.

CONTRACTION JOINTS MAY NOT BE MORE THAN 3 mm WIDE AND NOT LESS THAN 25 mm IN DEPTH AND MAY BE CUT BY A GROOVE FORMING TOOL.

LOCATE EXPANSION JOINTS EVERY 30 METERS (± 10 METERS) AT INTERVALS EQUAL TO THE NEAREST MULTIPLE OF THE CONTRACTION JOINT INTERVAL.

USE A LONGITUDINAL CONTRACTION JOINT IN THE CENTERLINE OF ALL SIDEWALKS WIDER THAN 1525 mm.

* THE MAXIMUM CROSS SLOPE OF THE SIDEWALK IS 2% (1:50).

** THIS DEPTH IS STANDARD IN NEW CONSTRUCTION. ALTERATIONS TO EXISTING FACILITIES MAY RESULT IN A LARGER DEPTH, WHICH WILL REQUIRE A GREATER RAMP LENGTH.

⊕ SEE DTL. DWG. NO. 608-15 AND 608-20 FOR GUIDELINES ON RAMP DESIGN WHEN RAMPS ARE REQUIRED FOR ADA ACCESSIBILITY.

ALL DIMENSIONS ARE MILLIMETERS (mm) UNLESS OTHERWISE NOTED.

DETAILED DRAWING	
REFERENCE STANDARD SPEC. SECTION 608	DWG. NO. 608-05
CONCRETE SIDEWALK	
EFFECTIVE: FEBRUARY 2005	

MDT serving you with pride — MONTANA DEPARTMENT OF TRANSPORTATION

CURB RAMP TYPES

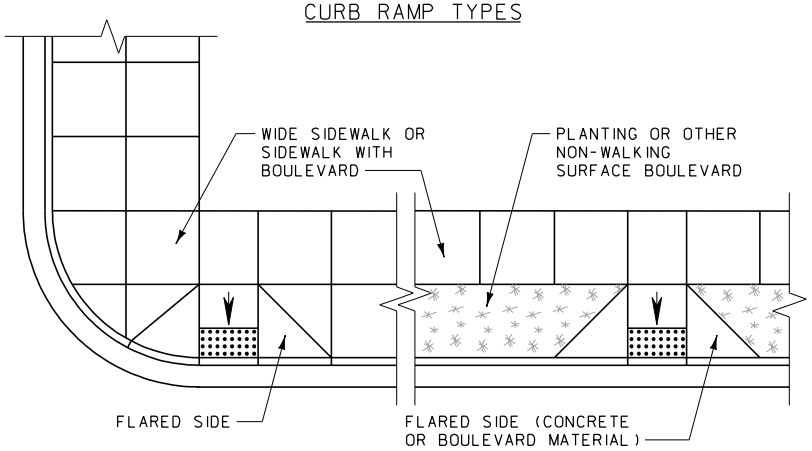

(A)

PERPENDICULAR PUBLIC SIDEWALK CURB RAMP (SEE DETAILED DRAWING NUMBER 608-25 FOR ADDITIONAL DETAILS)

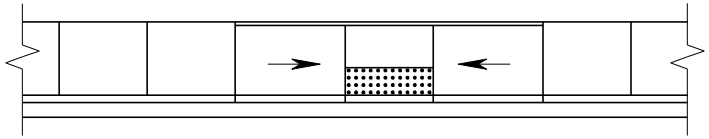

(B)

PARALLEL PUBLIC SIDEWALK CURB RAMP (SEE DETAILED DRAWING NUMBER 608-30 FOR ADDITIONAL DETAILS)

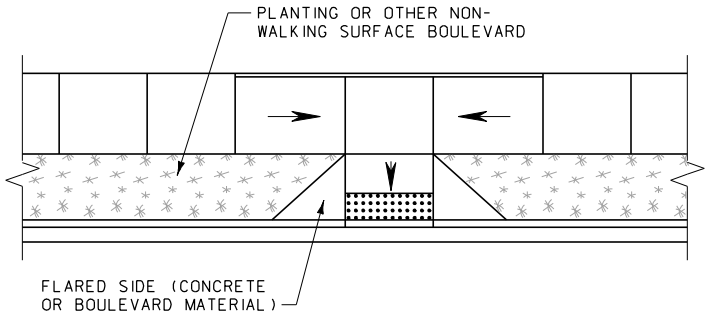

(C)

COMBINED (PARALLEL/PERPENDICULAR) PUBLIC SIDEWALK CURB RAMP (SEE DETAILED DRAWING NUMBERS 608-25 AND 608-30 FOR ADDITIONAL DETAILS)

GENERAL NOTES:

1. IN NEW CONSTRUCTION, USE PUBLIC SIDEWALK CURB RAMPS IN THE FOLLOWING ORDER OF PREFERENCE:

   A. PERPENDICULAR PUBLIC SIDEWALK CURB RAMP.
   B. PARALLEL PUBLIC SIDEWALK CURB RAMP.
   C. COMBINED (PARALLEL/PERPENDICULAR) PUBLIC SIDEWALK CURB RAMP.
   D. DIAGONAL PERPENDICULAR PUBLIC SIDEWALK CURB RAMP.

   SINGLE DIAGONAL OR DEPRESSED CORNER PUBLIC SIDEWALK CURB RAMPS SERVING TWO STREET CROSSING DIRECTIONS ARE NOT RECOMMENDED IN NEW CONSTRUCTION.

2. WHEN ALTERING EXISTING FACILITIES, MEET NEW CONSTRUCTION REQUIREMENTS FOR PUBLIC SIDEWALK CURB RAMPS TO THE MAXIMUM EXTENT FEASIBLE.

3. IF POSSIBLE, DO NOT PLACE DRAINAGE STRUCTURES IN CONFLICT WITH PUBLIC SIDEWALK CURB RAMPS. LOCATION OF CURB RAMPS TAKES PRECEDENCE OVER LOCATION OF DRAINAGE STRUCTURES EXCEPT WHERE EXISTING DRAINAGE STRUCTURES ARE BEING UTILIZED.

4. USE THE FLATTEST SLOPES POSSIBLE FOR ALL CURB RAMPS. MAXIMUM SLOPES ARE SHOWN FOR GUIDANCE AT DIFFICULT SITES.

5. FINAL FIELD LOCATION OF THE CURB RAMPS WILL BE DETERMINED BY THE PROJECT MANAGER.

6. IF R/W DOES NOT PERMIT LANDINGS FOR THESE RAMPS, USE ANOTHER RAMP DESIGN.

7. PEDESTRIAN ACCESS POINTS AT CROSSWALKS ARE TO BE WHOLLY CONTAINED WITHIN THE CROSSWALK LINES.

8. FOR ADDITIONAL INFORMATION CONSULT:

   DRAFT PUBLIC RIGHTS-OF-WAY ACCESSIBILITY GUIDELINES (PROWAG)

CONSTRUCTION REQUIREMENTS:

1. OBTAIN A SURFACE TEXTURE ON THE RAMP BY COARSE BROOMING, TRANSVERSE TO THE RAMP SLOPE.

2. TAKE CARE DURING CONSTRUCTION TO ASSURE UNIFORM RAMP GRADES, FREE OF SAGS AND SHARP GRADE CHANGES.

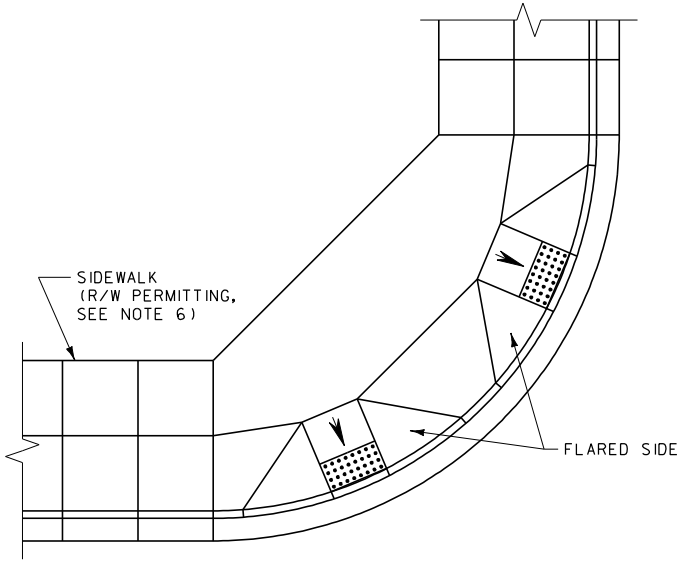

(D)

DIAGONAL PERPENDICULAR PUBLIC SIDEWALK CURB RAMP (SEE DETAILED DRAWING NUMBER 608-35 FOR ADDITIONAL DETAILS)

UNITS SHOWN IN BRACKETS [] ARE METRIC AND ARE IN MILLIMETERS (mm) UNLESS OTHER UNITS ARE SHOWN.

DETAILED DRAWING	
REFERENCE STANDARD SPEC. SECTION 608	DWG. NO. 608-15
NEW CONSTRUCTION PUBLIC SIDEWALK CURB RAMPS	
--REVISED-- MAY 2011	EFFECTIVE: FEBRUARY 2005
	MDT MONTANA DEPARTMENT OF TRANSPORTATION

CURB RAMP TYPES

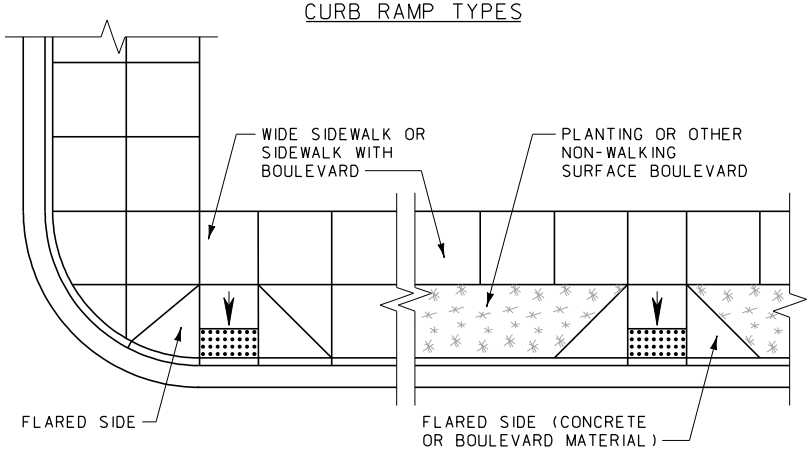

(A)

PERPENDICULAR PUBLIC SIDEWALK CURB RAMP (SEE DETAILED DRAWING NUMBER 608-25 FOR ADDITIONAL DETAILS)

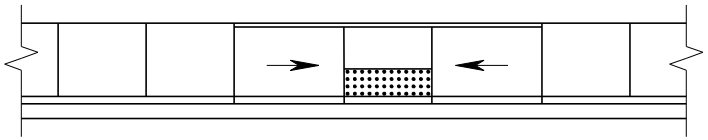

(B)

PARALLEL PUBLIC SIDEWALK CURB RAMP (SEE DETAILED DRAWING NUMBER 608-30 FOR ADDITIONAL DETAILS)

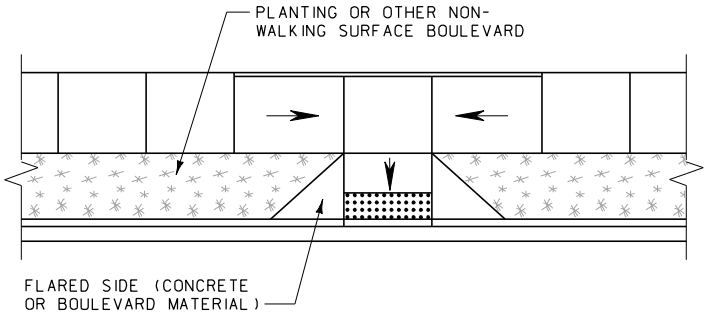

(C)

COMBINED (PARALLEL/PERPENDICULAR) PUBLIC SIDEWALK CURB RAMP (SEE DETAILED DRAWING NUMBERS 608-25 AND 608-30 FOR ADDITIONAL DETAILS)

CURB RAMP TYPES

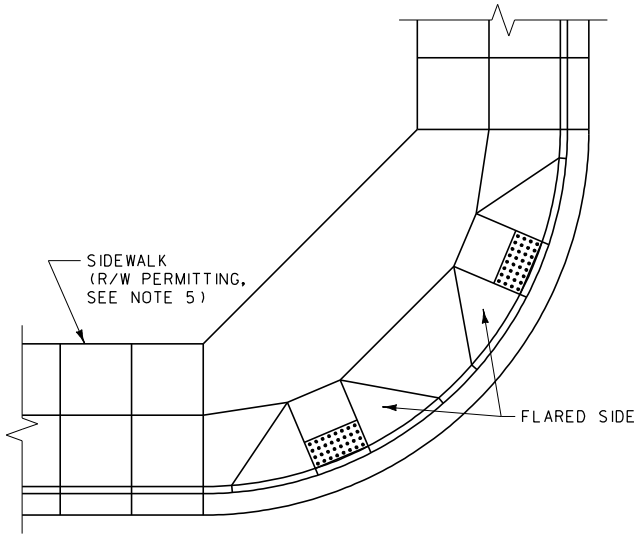

(D)

DIAGONAL PERPENDICULAR PUBLIC SIDEWALK CURB RAMP (SEE DETAILED DRAWING NUMBER 608-35 FOR ADDITIONAL DETAILS)

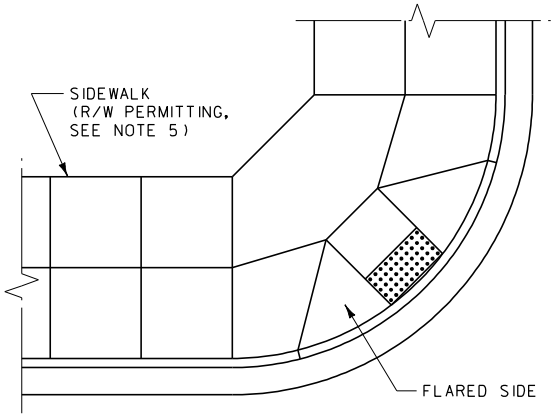

(E)

SINGLE DIAGONAL PERPENDICULAR PUBLIC SIDEWALK CURB RAMP (SEE DETAILED DRAWING NUMBER 608-35 FOR ADDITIONAL DETAILS)

GENERAL NOTES:

1. WHEN ALTERING EXISTING FACILITIES, USE PUBLIC SIDEWALK CURB RAMPS IN THE FOLLOWING ORDER OF PREFERENCE:

   A. PERPENDICULAR PUBLIC SIDEWALK CURB RAMP
   B. PARALLEL PUBLIC SIDEWALK CURB RAMP
   C. COMBINED (PARALLEL/PERPENDICULAR) PUBLIC SIDEWALK CURB RAMP
   D. DIAGONAL PERPENDICULAR PUBLIC SIDEWALK CURB RAMP
   E. SINGLE DIAGONAL PERPENDICULAR PUBLIC SIDEWALK CURB RAMP

   NOTE: USE DIAGONAL PUBLIC SIDEWALK CURB RAMPS AS THE LAST OPTION AND CONSTRUCT TO COMPLY WITH ALL ADA SLOPE AND CONSTRUCTION CRITERIA TO THE GREATEST EXTENT POSSIBLE.

2. PLACE CURB RAMPS TO AVOID EXISTING DRAINAGE STRUCTURES AND OTHER OBSTRUCTIONS TO THE GREATEST EXTENT POSSIBLE.

3. USE THE FLATTEST SLOPES POSSIBLE FOR ALL CURB RAMPS. MAXIMUM SLOPES ARE SHOWN FOR GUIDANCE AT DIFFICULT SITES AND SHOULD BE AVOIDED IF POSSIBLE.

4. FINAL FIELD LOCATION OF THE CURB RAMPS WILL BE DETERMINED BY THE PROJECT MANAGER.

5. IF R/W DOES NOT PERMIT LANDINGS FOR THESE RAMPS, USE ANOTHER RAMP DESIGN.

6. PEDESTRIAN ACCESS POINTS AT CROSSWALKS ARE TO BE WHOLLY CONTAINED WITHIN THE CROSSWALK LINES.

7. FOR ADDITIONAL INFORMATION CONSULT:

   DRAFT PUBLIC RIGHTS-OF-WAY ACCESSIBILITY GUIDELINES (PROWAG)

CONSTRUCTION REQUIREMENTS:

1. OBTAIN A SURFACE TEXTURE ON THE RAMP BY COARSE BROOMING, TRANSVERSE TO THE RAMP SLOPE.

2. PROVIDE UNIFORM RAMP GRADES FREE OF SAGS AND GRADE CHANGES.

UNITS SHOWN IN BRACKETS [] ARE METRIC AND ARE IN MILLIMETERS (mm) UNLESS OTHER UNITS ARE SHOWN.

DETAILED DRAWING	
REFERENCE STANDARD SPEC. SECTION 608	DWG. NO. 608-20
ALTERATIONS TO EXISTING FACILITIES - PUBLIC SIDEWALK CURB RAMPS	
--REVISED-- MAY 2011	EFFECTIVE: FEBRUARY 2005
	MDT MONTANA DEPARTMENT OF TRANSPORTATION

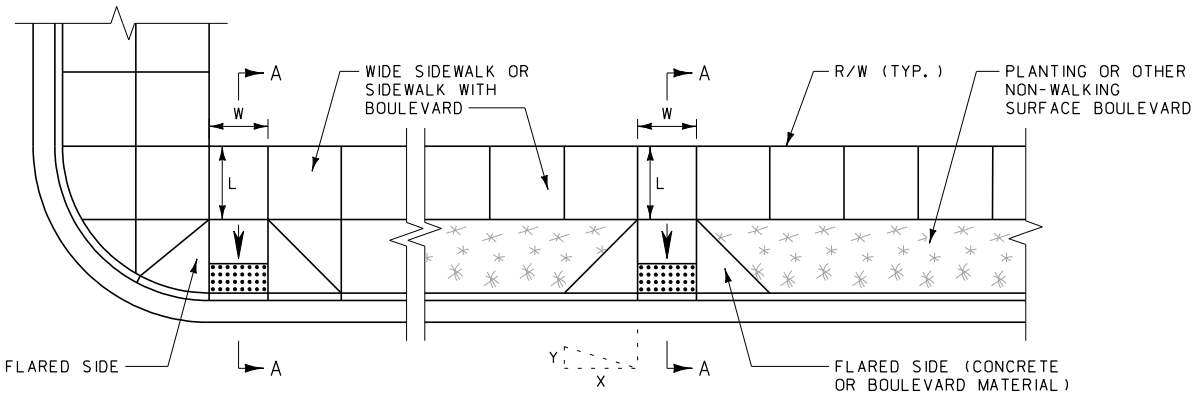

PERPENDICULAR PUBLIC SIDEWALK CURB RAMP

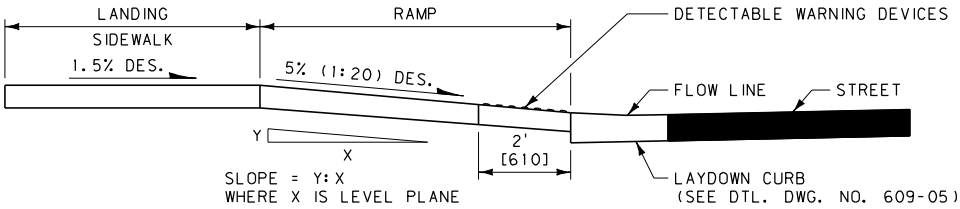

SECTION A-A

NEW CONSTRUCTION REQUIREMENTS:

1. THE DESIRABLE WIDTH OF THE CURB RAMP (DIMENSION "W" ABOVE) IS 5 FEET [1525 mm] OR WIDER. THE MINIMUM WIDTH ("W") IS 4 FEET [1220 mm].
2. THE DESIRABLE LENGTH OF THE LANDING AT THE TOP OF THE CURB RAMP (DIMENSION "L" ABOVE) IS 5 FEET [1525 mm]. THE MINIMUM LENGTH "L" IS 4 FEET [1220 mm]. THE LANDING WIDTH IS EQUAL TO THE RAMP WIDTH.
3. THE DESIRABLE SLOPE FOR THE CURB RAMP IS 5% (1:20) OR FLATTER. THE MAXIMUM CURB RAMP SLOPE IS 8.3% (1:12).
4. THE DESIRABLE SLOPE FOR THE FLARED SIDE OF THE CURB RAMP IS 8.3% (1:12) OR FLATTER. THE MAXIMUM FLARED SIDE SLOPE IS 10% (1:10).
5. THE DESIRABLE CROSS SLOPE OF THE SIDEWALK, RAMP, OR LANDING IS 1.5% (1:66.7). THE MAXIMUM CROSS SLOPE OF THE SIDEWALK, RAMP, OR LANDING IS 2% (1:50).
6. PROVIDE DETECTABLE WARNING DEVICES ON THE BOTTOM 2 FEET [610 mm] OF EACH RAMP AS SHOWN ABOVE. SEE DETAILED DRAWING NUMBER 608-40 FOR DETECTABLE WARNING DEVICES DETAILS.

REQUIREMENTS FOR ALTERATIONS TO EXISTING FACILITIES:

NOTE: WHEREVER POSSIBLE, ALTER EXISTING FACILITIES TO COMPLY WITH THE NEW CONSTRUCTION REQUIREMENTS.

1. THE MINIMUM WIDTH OF THE CURB RAMP (DIMENSION "W" ABOVE) IS 4 FEET [1220 mm].
2. WHERE RIGHT-OF-WAY WIDTH IS INSUFFICIENT TO ACCOMMODATE A TOP LANDING OF 5 FEET [1525 mm], PROVIDE A TOP LANDING OF 4 FEET [1220 mm]. THE LANDING WIDTH IS EQUAL TO THE RAMP WIDTH.
3. THE MAXIMUM CURB RAMP SLOPE IS 10% (1:10), PROVIDED THE RISE (DIMENSION "Y" ABOVE) IS 6 INCHES [150 mm] OR LESS. AN 8.3% (1:12) OR FLATTER SLOPE IS DESIRABLE.
4. THE MAXIMUM FLARED SIDE SLOPE IS 10% (1:10).
5. THE DESIRABLE CROSS SLOPE OF THE SIDEWALK, RAMP, OR LANDING IS 1.5% (1:66.7). THE MAXIMUM CROSS SLOPE OF THE SIDEWALK, RAMP, OR LANDING IS 2% (1:50).
6. PROVIDE DETECTABLE WARNING DEVICES ON THE BOTTOM 2 FEET [610 mm] OF EACH RAMP AS SHOWN ABOVE. SEE DETAILED DRAWING NUMBER 608-40 FOR DETECTABLE WARNING DEVICES DETAILS.
7. WHERE EXISTING SITE DEVELOPMENT CONDITIONS PROHIBIT THE STRICT AND FULL COMPLIANCE OF ALL ADA CRITERIA, PROVIDE ACCESSIBILITY TO THE MAXIMUM EXTENT FEASIBLE.

UNITS SHOWN IN BRACKETS [] ARE METRIC AND ARE IN MILLIMETERS (mm) UNLESS OTHER UNITS ARE SHOWN.

GENERAL NOTES:

1. WHERE THE RIGHT-OF-WAY WILL NOT ACCOMMODATE A PERPENDICULAR PUBLIC SIDEWALK CURB RAMP AND LANDING MEETING THESE REQUIREMENTS, USE A COMBINED (PARALLEL/PERPENDICULAR) OR PARALLEL PUBLIC SIDEWALK CURB RAMP.
2. COMBINED (PARALLEL/PERPENDICULAR) PUBLIC SIDEWALK CURB RAMPS ARE TO MEET THE CRITERIA FOR BOTH THE PARALLEL AND PERPENDICULAR PUBLIC SIDEWALK CURB RAMPS. (SEE DETAILED DRAWING NUMBER 608-30 AND THIS DRAWING.)

DETAILED DRAWING	
REFERENCE STANDARD SPEC. SECTION 608	DWG. NO. 608-25
PERPENDICULAR PUBLIC SIDEWALK CURB RAMPS	
--REVISED-- MAY 2011	EFFECTIVE: FEBRUARY 2005
	MDT MONTANA DEPARTMENT OF TRANSPORTATION

PARALLEL PUBLIC SIDEWALK CURB RAMPS

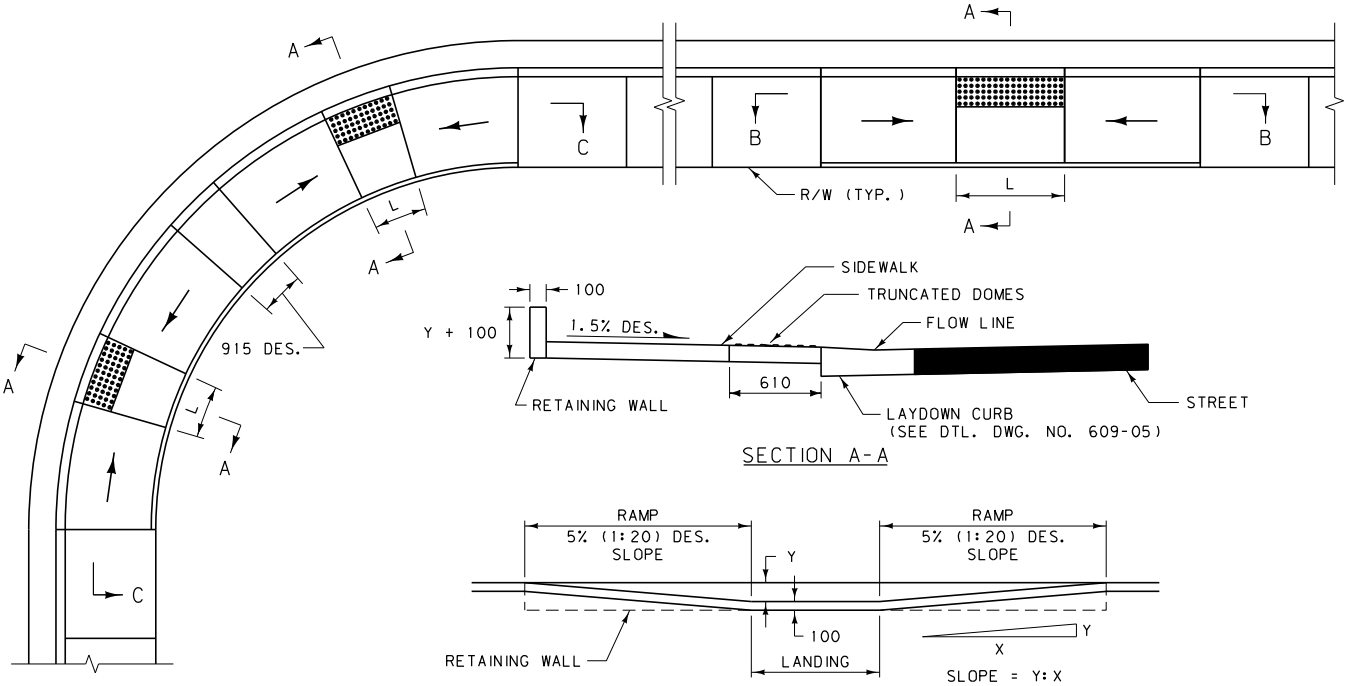

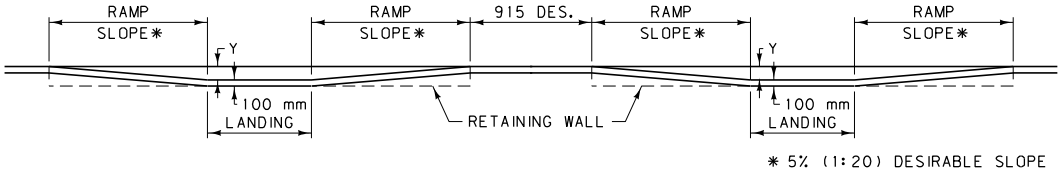

SECTION C-C

NEW CONSTRUCTION REQUIREMENTS:

1. THE MINIMUM LENGTH OF THE LANDING (DIMENSION "L" ABOVE) IS 1525 mm.
2. THE DESIRABLE SLOPE FOR THE CURB RAMPS IS 5% (1:20) OR FLATTER. THE MAXIMUM CURB RAMP SLOPE IS 8.3% (1:12).
3. THE DESIRABLE CROSS SLOPE OF THE SIDEWALK, RAMP, OR LANDING IS 1.5% (1:66.7). THE MAXIMUM CROSS SLOPE OF THE SIDEWALK, RAMP, OR LANDING IS 2% (1:50).
4. PROVIDE TRUNCATED DOMES ON THE BOTTOM 610 mm OF EACH LANDING AS SHOWN ABOVE. SEE DETAIL DRAWING NUMBER 608-40 FOR TRUNCATED DOMES DETAILS.

REQUIREMENTS FOR ALTERATIONS TO EXISTING FACILITIES:

NOTE: WHEREVER POSSIBLE, ALTER EXISTING FACILITIES TO COMPLY WITH THE NEW CONSTRUCTION REQUIREMENTS.

1. THE DESIRABLE LENGTH OF THE LANDING (DIMENSION "L" ABOVE) IS 1525 mm. THE MINIMUM LANDING LENGTH IS 1220 mm.
2. THE MAXIMUM CURB RAMP SLOPE IS 10% (1:10), PROVIDED THE RISE (DIMENSION "Y" ABOVE) IS 150 mm OR LESS. AN 8.3% (1:12) OR FLATTER SLOPE IS DESIRABLE.
3. THE DESIRABLE CROSS SLOPE OF THE SIDEWALK, RAMP, OR LANDING IS 1.5% (1:66.7). THE MAXIMUM CROSS SLOPE OF THE SIDEWALK, RAMP, OR LANDING IS 2% (1:50).
4. PROVIDE TRUNCATED DOMES ON THE BOTTOM 610 mm OF EACH LANDING AS SHOWN ABOVE. SEE DETAILED DRAWING NUMBER 608-40 FOR TRUNCATED DOMES DETAILS.
5. WHERE EXISTING SITE DEVELOPMENT CONDITIONS PROHIBIT THE STRICT AND FULL COMPLIANCE OF ALL ADA CRITERIA, PROVIDE ACCESSIBILITY TO THE MAXIMUM EXTENT FEASIBLE.

GENERAL NOTES:

1. THE COST OF THE RETAINING WALL IS INCLUDED IN THE UNIT PRICE BID FOR CONCRETE SIDEWALK.
2. COMBINED (PARALLEL/PERPENDICULAR) PUBLIC SIDEWALK CURB RAMPS ARE TO MEET THE CRITERIA FOR BOTH THE PARALLEL AND PERPENDICULAR PUBLIC SIDEWALK CURB RAMPS. (SEE DETAILED DRAWING NUMBER 608-25 AND THIS DRAWING.)

ALL DIMENSIONS ARE MILLIMETERS (mm) UNLESS OTHERWISE NOTED.

DETAILED DRAWING	
REFERENCE STANDARD SPEC. SECTION 608	DWG. NO. 608-30
PARALLEL PUBLIC SIDEWALK CURB RAMPS	
EFFECTIVE: FEBRUARY 2005	
serving you with pride	MONTANA DEPARTMENT OF TRANSPORTATION

DIAGONAL PERPENDICULAR PUBLIC SIDEWALK CURB RAMP

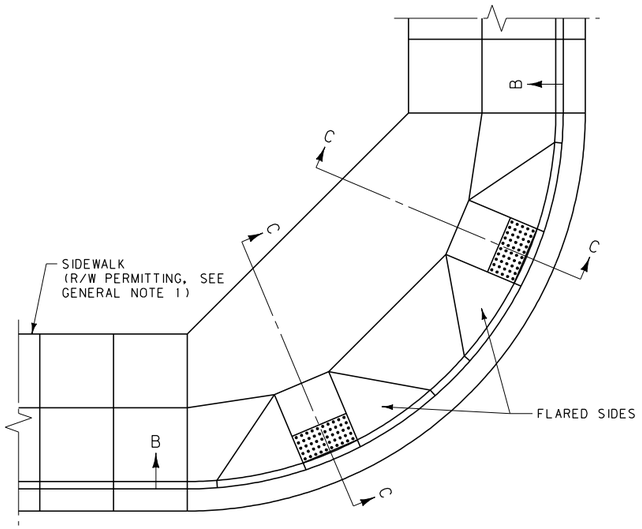

SINGLE DIAGONAL PERPENDICULAR PUBLIC SIDEWALK CURB RAMP

NOTE: SINGLE DIAGONAL PERPENDICULAR PUBLIC SIDEWALK CURB RAMPS SERVING TWO STREET CROSSING DIRECTIONS ARE NOT RECOMMENDED IN NEW CONSTRUCTION.

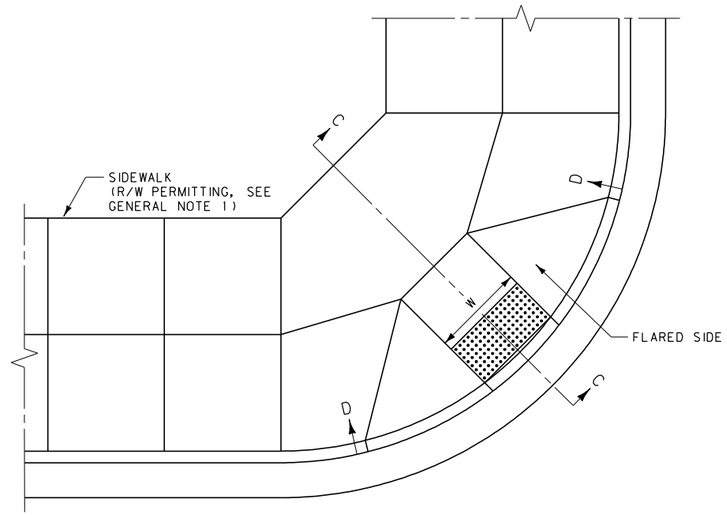

PRIVATE APPROACH SIDEWALK CURB RAMP

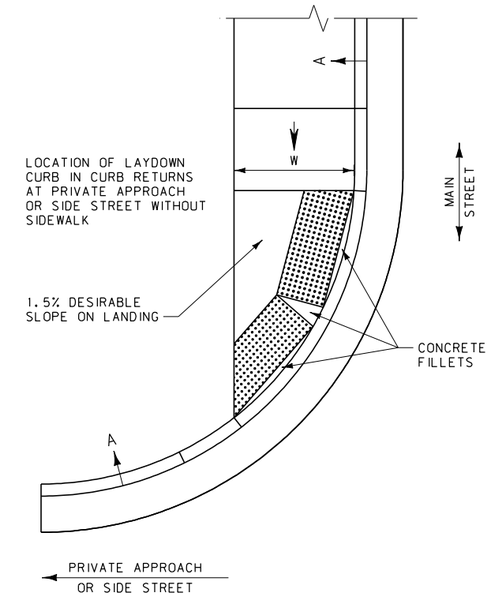

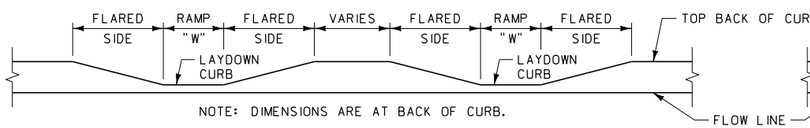

SECTION B-B

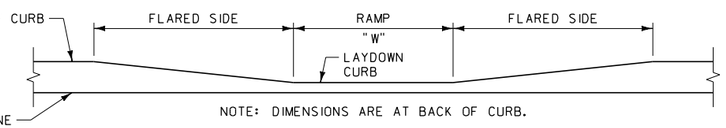

SECTION D-D

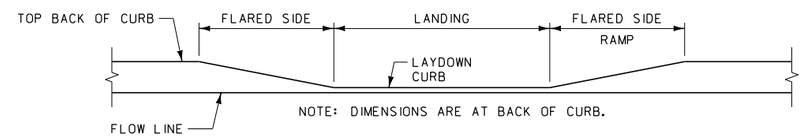

SECTION A-A

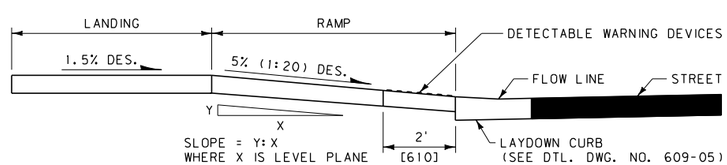

SECTION C-C

NEW CONSTRUCTION REQUIREMENTS:

1. THE DESIRABLE WIDTH OF THE CURB RAMP (DIMENSION "W" ABOVE) IS 5 FEET [1525 mm] OR WIDER. THE MINIMUM WIDTH ("W") IS 4 FEET [1220 mm].
2. THE DESIRABLE LENGTH OF THE LANDING AT THE TOP OF THE CURB RAMP IS 5 FEET [1525 mm]. THE MINIMUM LENGTH OF THE LANDING IS 4 FEET [1220 mm]. THE LANDING WIDTH IS EQUAL TO THE RAMP WIDTH.
3. THE DESIRABLE SLOPE FOR THE CURB RAMP IS 5% (1:20) OR FLATTER. THE MAXIMUM CURB RAMP SLOPE IS 8.3% (1:12).
4. THE DESIRABLE SLOPE FOR THE FLARED SIDE OF THE CURB RAMP IS 8.3% (1:12) OR FLATTER. THE MAXIMUM FLARED SIDE SLOPE IS 10% (1:10).
5. THE DESIRABLE CROSS SLOPE OF THE SIDEWALK, RAMP, OR LANDING IS 1.5% (1:66.7). THE MAXIMUM CROSS SLOPE OF THE SIDEWALK, RAMP, OR LANDING IS 2% (1:50).
6. PROVIDE DETECTABLE WARNING DEVICES ON THE BOTTOM 2 FEET [610 mm] OF EACH RAMP AS SHOWN ABOVE. SEE DETAILED DRAWING NUMBER 608-40 FOR DETECTABLE WARNING DEVICES DETAILS.

REQUIREMENTS FOR ALTERATIONS TO EXISTING FACILITIES:

NOTE: WHEREVER POSSIBLE, ALTER EXISTING FACILITIES TO COMPLY WITH THE NEW CONSTRUCTION REQUIREMENTS.

1. THE MINIMUM WIDTH OF THE CURB RAMP (DIMENSION "W" ABOVE) IS 4 FEET [1220 mm].
2. WHERE RIGHT-OF-WAY WIDTH IS INSUFFICIENT TO ACCOMMODATE A TOP LANDING OF 5 FEET [1525 mm], PROVIDE A TOP LANDING OF 4 FEET [1220 mm]. THE LANDING WIDTH IS EQUAL TO THE RAMP WIDTH.
3. THE MAXIMUM CURB RAMP SLOPE IS 10% (1:10), PROVIDED THE RISE (DIMENSION "Y" ABOVE) IS 6 INCHES [150 mm] OR LESS. AN 8.3% (1:12) OR FLATTER SLOPE IS DESIRABLE.
4. THE MAXIMUM FLARED SIDE SLOPE IS 10% (1:10).
5. THE DESIRABLE CROSS SLOPE OF THE SIDEWALK, RAMP, OR LANDING IS 1.5% (1:66.7). THE MAXIMUM CROSS SLOPE OF THE SIDEWALK, RAMP, OR LANDING IS 2% (1:50).
6. PROVIDE DETECTABLE WARNING DEVICES ON THE BOTTOM 2 FEET [610 mm] OF EACH RAMP AS SHOWN ABOVE. SEE DETAILED DRAWING NUMBER 608-40 FOR DETECTABLE WARNING DEVICES DETAILS.
7. WHERE EXISTING SITE DEVELOPMENT CONDITIONS PROHIBIT THE STRICT AND FULL COMPLIANCE OF ALL ADA CRITERIA, PROVIDE ACCESSIBILITY TO THE MAXIMUM EXTENT FEASIBLE.

GENERAL NOTES:

1. WHERE THE RIGHT-OF-WAY WILL NOT ACCOMMODATE A DIAGONAL PERPENDICULAR PUBLIC SIDEWALK CURB RAMP AND LANDING MEETING THESE REQUIREMENTS, USE ANOTHER RAMP DESIGN.
2. TRIM PRECAST DETECTABLE WARNING DEVICES PANELS TO FIT ON PRIVATE APPROACH SIDEWALK CURB RAMPS AS SHOWN ABOVE.

UNITS SHOWN IN BRACKETS [] ARE METRIC AND ARE IN MILLIMETERS (mm) UNLESS OTHER UNITS ARE SHOWN.

DETAILED DRAWING	
REFERENCE STANDARD SPEC. SECTION 608	DWG. NO. 608-35
DIAGONAL PERPENDICULAR PUBLIC SIDEWALK CURB RAMPS	
--REVISED-- MAY 2011	EFFECTIVE: FEBRUARY 2005
	MDT MONTANA DEPARTMENT OF TRANSPORTATION

CURB RAMP TYPES

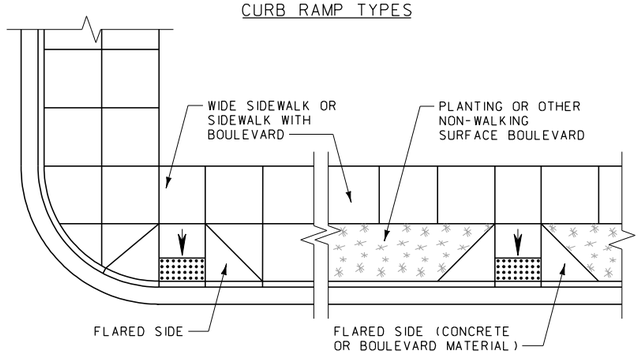

PERPENDICULAR PUBLIC SIDEWALK CURB RAMP (SEE DETAILED DRAWING NUMBER 608-25 FOR ADDITIONAL DETAILS)

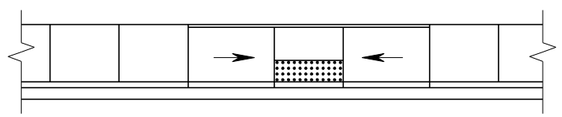

PARALLEL PUBLIC SIDEWALK CURB RAMP (SEE DETAILED DRAWING NUMBER 608-30 FOR ADDITIONAL DETAILS)

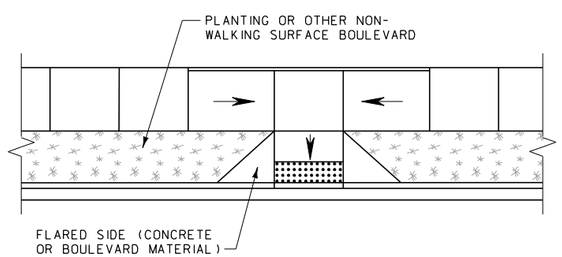

COMBINED (PARALLEL/PERPENDICULAR) PUBLIC SIDEWALK CURB RAMP (SEE DETAILED DRAWING NUMBERS 608-25 AND 608-30 FOR ADDITIONAL DETAILS)

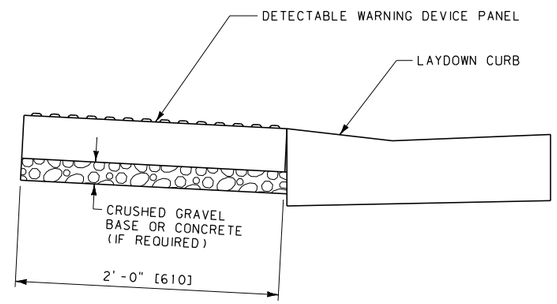

SIDE VIEW

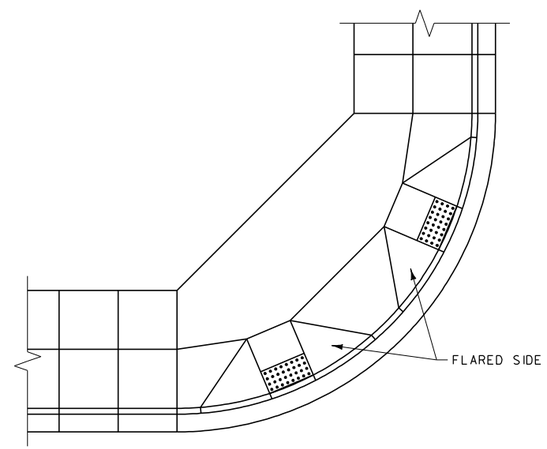

DIAGONAL PERPENDICULAR PUBLIC SIDEWALK CURB RAMP (SEE DETAILED DRAWING NUMBER 608-35 FOR ADDITIONAL DETAILS)

DETECTABLE WARNING DEVICE ALIGNMENT AND PATTERN

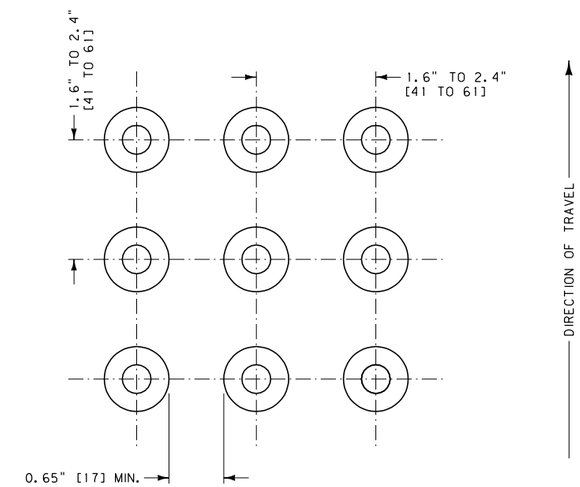

SQUARE PATTERN
PARALLEL ALIGNMENT

DOME PROFILE

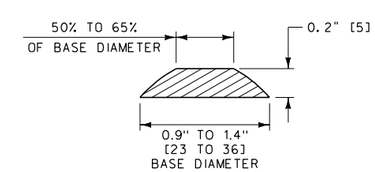

CONSTRUCTION REQUIREMENTS:

1. INSTALL DETECTABLE WARNING DEVICES THAT EXTEND THE FULL WIDTH OF THE RAMP, 2 FEET [610 mm] IN DEPTH.
2. INSTALL THE DOME PANEL ADJACENT TO THE BACK OF CURB. IF THE PANEL IS OFFSET, LOCATE THE EDGE OF THE PANEL NO MORE THAN 6 INCHES [150 mm] FROM THE BACK OF CURB.
3. IF THE DETECTABLE WARNING DEVICE IS EMBEDDED IN CONCRETE, INSTALL SO THE TOP OF THE PANEL IS FLUSH WITH THE ADJACENT CONCRETE AND THE DOMES WILL PROTRUDE ABOVE THE ADJACENT SURFACE.
4. ENSURE A UNIFORM GRADE ON THE DETECTABLE WARNING DEVICES FREE OF SAGS AND IRREGULAR EDGES.
5. USE DETECTABLE WARNING DEVICES - TYPE I FOR NEW SIDEWALK CONSTRUCTION. DETECTABLE WARNING DEVICES - TYPE I ARE CAST DIRECTLY INTO SIDEWALK. USE DETECTABLE WARNING DEVICES - TYPE II FOR RETROFITS ON EXISTING SIDEWALKS WHERE NEW CONCRETE IS NOT BEING PLACED. DETECTABLE WARNING DEVICES - TYPES II ARE SURFACE APPLIED ON THE SIDEWALK. MEET THE DEPARTMENT'S REQUIREMENTS ON THE QUALIFED PRODUCTS LIST (QPL) FOR DETECTABLE WARNING DEVICES - TYPE I AND FOR DETECTABLE WARNING DEVICES - TYPE II.
6. USE DETECTABLE WARNING DEVICES THAT VISUALLY CONTRAST WITH ADJACENT WALKWAY SURFACES.

UNITS SHOWN IN BRACKETS [] ARE METRIC AND ARE IN MILLIMETERS (mm) UNLESS OTHER UNITS ARE SHOWN.

DETAILED DRAWING	
REFERENCE STANDARD SPEC. SECTION 608	DWG. NO. 608-40
DETECTABLE WARNING DEVICES	
--REVISED--	EFFECTIVE: FEBRUARY 2005
MAY 2009	MDT MONTANA DEPARTMENT OF TRANSPORTATION
MAY 2011	