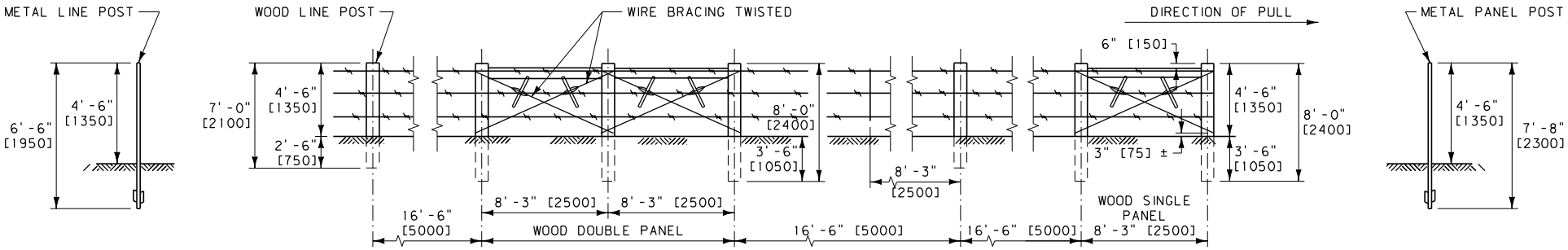

WIRE SPACING TABLE

COMBINATION WOVEN WIRE & BARBED WIRE FENCE			BARBED WIRE FENCE			
48" [1200] FENCE HEIGHT		51" [1280] FENCE HEIGHT	48" [1.2 m] FENCE HEIGHT			
32" [813] WW-2 BW *	32" [813] WW-3 BW *	39" [990] WW-2 BW *	3 BW	4 BW	5 BW	6 BW
TYPE F2-32WW [813WW]	TYPE F3-32WW [813WW]	TYPE F2-39WW [990WW]	TYPE F3	TYPE F4	TYPE F5	TYPE F6
9" [225] 5" [125] 6" [150] 5 1/2" [140] 5" [125] 4 1/2" [115] 4" [100] 3 1/2" [90] 3" [80] 2" [50]	6" [150] 4" [100] 4" [100] 6" [150] 5 1/2" [140] 5" [125] 4 1/2" [115] 4" [100] 3 1/2" [90] 3" [80] 2" [50]	6" [150] 4" [100] 7" [180] 6" [150] 5 1/2" [140] 5" [125] 4 1/2" [115] 4" [100] 3 1/2" [90] 3" [80] 2" [50]	16" [400] 16" [400] 16" [400]	12" [300] 12" [300] 12" [300] 12" [300]	12" [300] 12" [300] 10" [250] 8" [200] 6" [150]	12" [300] 8" [200] 8" [200] 8" [200] 6" [150] 6" [150]
APPROXIMATE WEIGHT OF 32" [813] WOVEN WIRE FABRIC (832-6-12 1/2) PER 20 ROD [100 m] ROLL IS 150 LB. [68 kg] ±10 LB. [5 kg] (NOTE: 12 1/2 GAGE) ○ DENOTES STAPLE LOCATIONS		APPROXIMATE WEIGHT OF 39" [990] WOVEN WIRE FABRIC (939-6-12 1/2) PER 20 ROD [100 m] ROLL IS 170 LB. [77 kg] ±10 LB. [5 kg] (NOTE: 12 1/2 GAGE)				

* OTHER WOVEN WIRE HEIGHTS AND NUMBER OF BARBED WIRE COMBINATIONS ARE AVAILABLE.

STAYS

1. USE WIRE STAYS ON ALL FENCES UNLESS WOOD STAYS ARE SPECIFIED.
2. LOCATE STAYS HALFWAY BETWEEN LINE POSTS.
3. WIRE STAYS FOR BARBED WIRE FENCING ARE 2" [50] LONGER THAN THE DISTANCE BETWEEN THE TOP AND BOTTOM WIRES.
4. FOR WOVEN WIRE FENCING WITH BARBED WIRE ON TOP, EXTEND WIRE STAYS 6" [150] MINIMUM BELOW THE TOP OF THE WOVEN WIRE.
5. WHEN WOOD STAYS ARE SPECIFIED, USE EITHER 2" [50] ROUND, A ROUGH DIMENSION 2" x 2" [50 x 50], OR A 1 1/2" x 3 1/2" [37.5 x 87.5] (NOMINAL 2" x 4" [50 x 100]). THE STAY MUST BE OF SUFFICIENT LENGTH TO BE PLACED ON THE GROUND WITH THE TOP OF THE STAY EXTENDING 2" [50] ABOVE THE TOP WIRE. ATTACH EACH WIRE TO THE WOOD STAYS USING 1 3/4" [44] x 9 GAGE STAPLES. WOOD STAYS DO NOT NEED TO BE TREATED.

NOTES:

① "M" DENOTES METAL POSTS, IE. TYPE F3M.
"W" DENOTES WOOD POSTS, IE. TYPE F4W.

② SEE DTL. DWG. NO. 607-05 FOR SINGLE AND DOUBLE PANEL DETAILS.
SEE DTL. DWG. NO. 607-10 AND 607-15 FOR ADDITIONAL FENCING DETAILS.

UNITS SHOWN IN BRACKETS [] ARE METRIC AND ARE IN MILLIMETERS (mm) UNLESS OTHER UNITS ARE SHOWN.

DETAILED DRAWING

REFERENCE STANDARD SPEC. SECTION 607

DWG. NO. 607-00

FARM FENCE

--REVISED-- MAY 2011

EFFECTIVE: FEBRUARY 2005

MDT MONTANA DEPARTMENT OF TRANSPORTATION

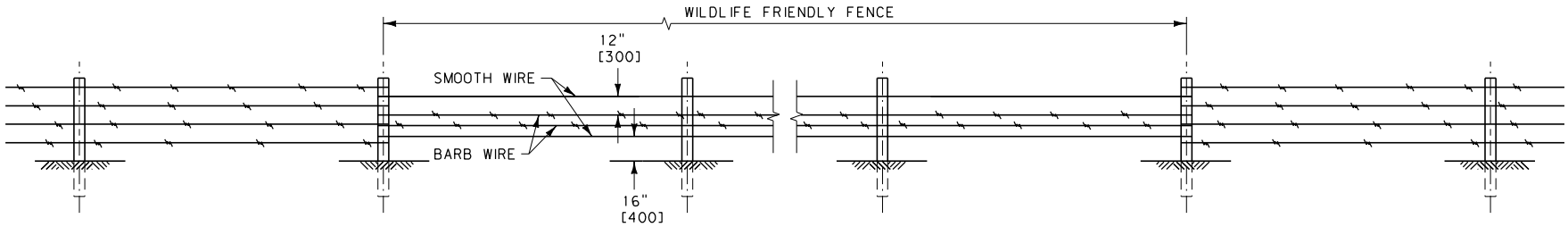

WIRE SPACING TABLE
WILDLIFE-FRIENDLY FARM FENCE TYPE 1
42" [1050] FENCE HEIGHT
WF-2 BW/2 SW-16" [400]
TYPE WF4-SBBS-16 [400]

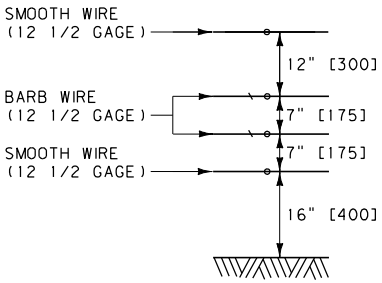

WIRE SPACING TABLE
WILDLIFE-FRIENDLY FARM FENCE TYPE 2
42" [1050] FENCE HEIGHT
WF-3 BW/1 SW-16" [400]
TYPE WF4-3BS-16 [400]

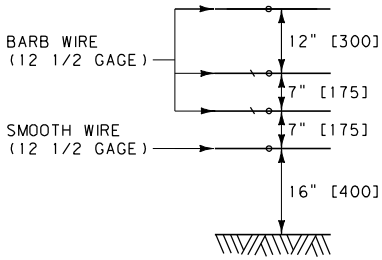

WIRE SPACING TABLE
WILDLIFE-FRIENDLY FARM FENCE TYPE 3
42" [1050] FENCE HEIGHT
WF-4 BW-16" [400]
TYPE WF4-4B-16 [400]

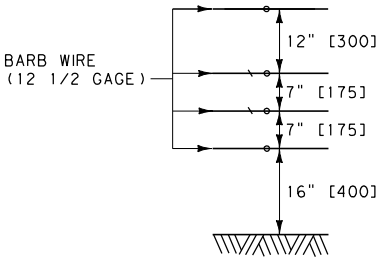

STAYS

1. USE WIRE STAYS ON ALL FENCES UNLESS WOOD STAYS ARE SPECIFIED.
2. LOCATE STAYS HALFWAY BETWEEN LINE POSTS.
3. WIRE STAYS ARE 2" [50] LONGER THAN THE DISTANCE BETWEEN THE TOP AND BOTTOM WIRES.

NOTES:

1. SEE DTL. DWG. NO. 607-05 FOR SINGLE AND DOUBLE PANEL DETAILS.
   SEE DTL. DWG. NO. 607-10 AND 607-15 FOR ADDITIONAL FENCING DETAILS.

UNITS SHOWN IN BRACKETS [] ARE METRIC AND ARE IN MILLIMETERS (mm) UNLESS OTHER UNITS ARE SHOWN.

DETAILED DRAWING	
REFERENCE STANDARD SPEC. SECTION 607	DWG. NO. 607-01
WILDLIFE FRIENDLY FENCE 16" [400] BOTTOM WIRE HEIGHT	
EFFECTIVE: MAY 2011	

MDT MONTANA DEPARTMENT OF TRANSPORTATION

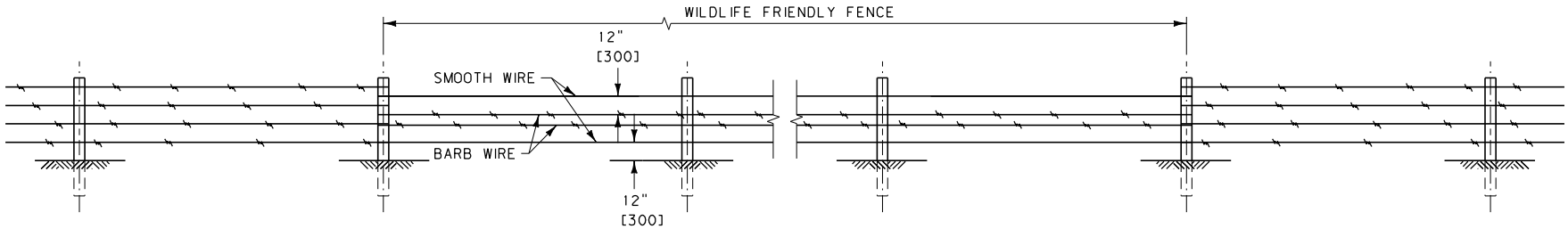

WIRE SPACING TABLE
WILDLIFE-FRIENDLY FARM FENCE TYPE 4
42" [1050] FENCE HEIGHT
WF-2 BW/2 SW-12" [300]
TYPE WF4-SBBS-12 [300]

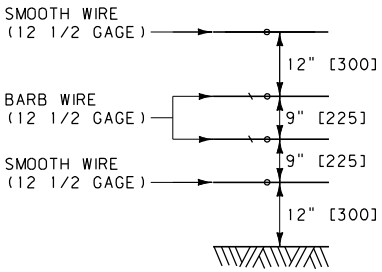

WIRE SPACING TABLE
WILDLIFE-FRIENDLY FARM FENCE TYPE 5
42" [1050] FENCE HEIGHT
WF-3 BW/1 SW-12" [300]
TYPE WF4-3BS-12 [300]

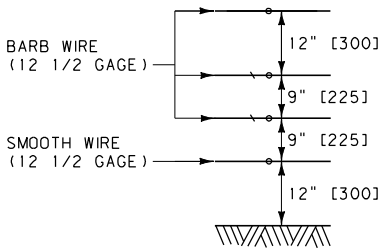

WIRE SPACING TABLE
WILDLIFE-FRIENDLY FARM FENCE TYPE 6
42" [1050] FENCE HEIGHT
WF-4 BW-12" [300]
TYPE WF4-4B-12 [300]

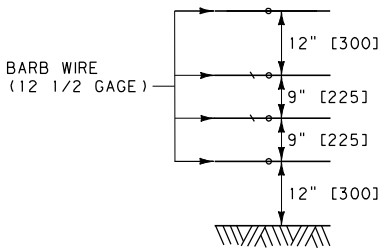

STAYS

1. USE WIRE STAYS ON ALL FENCES UNLESS WOOD STAYS ARE SPECIFIED.
2. LOCATE STAYS HALFWAY BETWEEN LINE POSTS.
3. WIRE STAYS ARE 2" [50] LONGER THAN THE DISTANCE BETWEEN THE TOP AND BOTTOM WIRES.

NOTES:

1. SEE DTL. DWG. NO. 607-05 FOR SINGLE AND DOUBLE PANEL DETAILS.
   SEE DTL. DWG. NO. 607-10 AND 607-15 FOR ADDITIONAL FENCING DETAILS.

UNITS SHOWN IN BRACKETS [] ARE METRIC AND ARE IN MILLIMETERS (mm) UNLESS OTHER UNITS ARE SHOWN.

DETAILED DRAWING	
REFERENCE STANDARD SPEC. SECTION 607	DWG. NO. 607-02
WILDLIFE FRIENDLY FENCE 12" [300] BOTTOM WIRE HEIGHT	
EFFECTIVE: MAY 2011	

MDT MONTANA DEPARTMENT OF TRANSPORTATION

BRACE WIRES - ONE CONTINUOUS 9 OR 12.5 GAGE SMOOTH WIRE DOUBLED TO FORM A FOUR WIRE BRACE. TIE THE TWO ENDS NEAR THE TOP OF THE PANEL POSTS.

LEVERS - 37.5 x 50 x 300 MINIMUM SIZE.

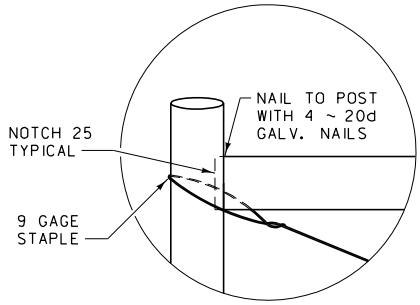

DETAIL "A"

WHEN SQUARE POSTS ARE USED, NOTCHING IS NOT NECESSARY.

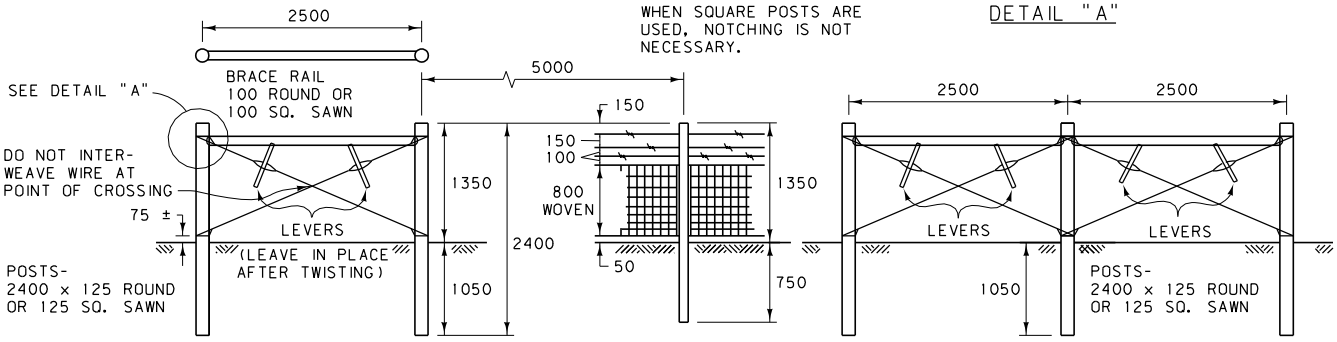

SINGLE PANEL

FOR PULLING, STRETCHING, CHANGES IN VERTICAL ALIGNMENT OR PANELS ON A RUN OF LESS THAN 100 m.

LINE POST

2100 x 100 MIN. ROUND OR 100 x 100 SQ. SAWN

DOUBLE PANEL

FOR CORNERS, PULLING OR STRETCHING, AND CHANGES IN HORIZONTAL ALIGNMENT.

TYPE "CW" - "STRAIGHT RUN" FENCE WITH WOOD POSTS

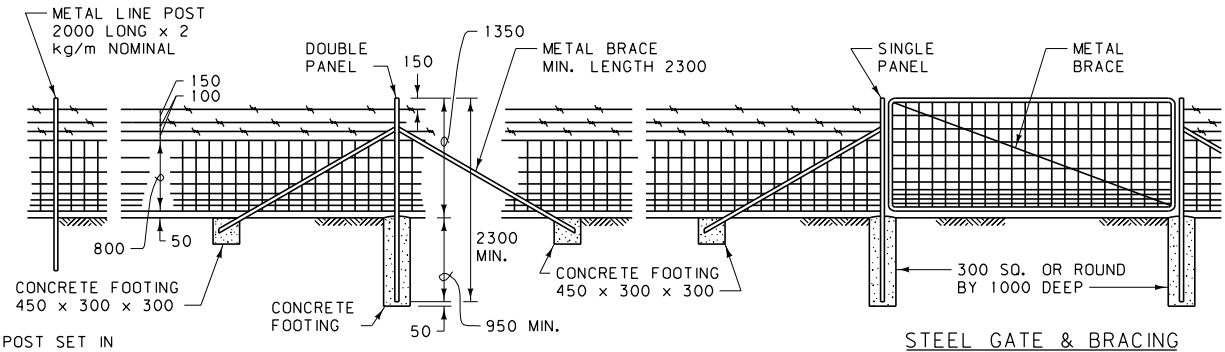

WHEN POST SET IN SOLID ROCK, PROVIDE 450 MIN. BURIAL.

STEEL GATE & BRACING

TYPE "CM" - FENCE WITH STEEL POSTS

NOTES:

SEE THE STANDARD SPECIFICATIONS FOR POST AND GATE REQUIREMENTS.

PLACE ALL FENCE WIRE ON PASTURE SIDE OF POST, EXCEPT ON CURVES. THEN, PLACE THE WIRE ON THE OUTSIDE OF THE CURVE.

IN AREAS SUBJECT TO HIGH VELOCITY WINDS AND MOVING DEBRIS, WIRES MAY BE PLACED ON WINDWARD SIDE OF POSTS, EXCEPT ON CURVES.

ALL CONCRETE IS CLASS "F" OR BETTER.

POST SPACING IS GENERALLY MEASURED PARALLEL TO GROUND.

LINE POST SPACING IS 5000 mm CENTER TO CENTER. LINE POST SPACING FROM BRACE OR PANEL POST IS 5000 mm CENTER TO CENTER.

PLACE 600 mm WIRE STAY HALFWAY BETWEEN POSTS. DO NOT PLACE STAYS ON PANELS FOR "CM" AND "CW" FENCE.

TYPE "CW" FENCE HAS ONE METAL POST IN PLACE OF A WOODEN LINE POST IN EACH 150 m RUN FOR LIGHTNING PROTECTION.

USE TYPE "CW" (WOOD) PANELS ON ALL TYPE "CM" (METAL) FENCES INSTEAD OF STEEL PANELS UNLESS OTHERWISE SPECIFIED.

SET STEEL CORNER, END, GATE AND PULL POSTS, AND EACH BRACE IN CONCRETE AS SHOWN.

SEE DTL. DWG. NO. 607-10 FOR ADDITIONAL FENCING DETAILS.

A DEADMAN MAY BE A PRECAST CONCRETE BLOCK, A CAST IN PLACE CONCRETE BLOCK, A ROCK OR OTHER APPROVED OBJECT WEIGHING AT LEAST 70 kg. BURY THE DEADMAN IN THE GROUND WITH AT LEAST 600 mm OF COVER. ATTACH THE DEADMAN TO THE FENCE WITH 3 STRANDS OF 9 GAGE WIRE OR 6 STRANDS OF 12.5 GAGE WIRE. SEE DETAILED DRAWING NO. 607-10 FOR ALTERNATE DEADMAN.

STAPLE THE BOTTOM, TOP, CENTER AND ALTERNATE WIRES OF WOVEN WIRE TO WOOD LINE POSTS.

TIE THE BOTTOM, TOP, CENTER AND ALTERNATE WIRES OF WOVEN WIRE TO STEEL LINE POSTS.

STAPLE ALL WIRES OF WOVEN WIRE TO WOOD CORNER POSTS OR POST USED TO TIE-OFF WIRE.

ALL DIMENSIONS ARE MILLIMETERS (mm) UNLESS OTHERWISE NOTED.

DETAILED DRAWING	
REFERENCE STANDARD SPEC. SECTION 607	DWG. NO. 607-05
INTERSTATE FENCE	
EFFECTIVE: FEBRUARY 2005	

MDT serving you with pride — MONTANA DEPARTMENT OF TRANSPORTATION

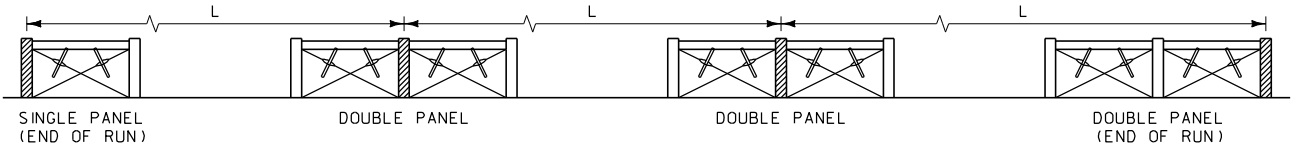

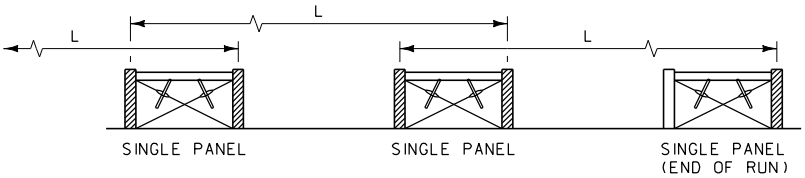

FENCE TYPE	RUN = L	PANELS REQUIRED
COMBINATION WOVEN/BARBED	LESS THAN 33'	NONE
	33' - 330'	SINGLE
	OVER 330' TO 660' MAX.	DOUBLE
BARBED	LESS THAN 66'	NONE
	66' -660'	SINGLE
	OVER 660' TO 990' MAX.	DOUBLE

FENCE TYPE	RUN = L (m)	PANELS REQUIRED
COMBINATION WOVEN/BARBED	LESS THAN 10	NONE
	10 - 100	SINGLE
	OVER 100 TO 200 MAX.	DOUBLE
BARBED	LESS THAN 20	NONE
	20 - 200	SINGLE
	OVER 200 TO 300 MAX.	DOUBLE

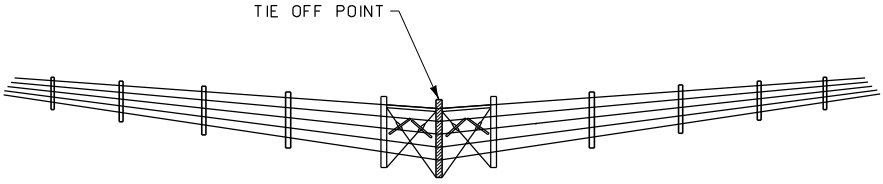

DOUBLE PANEL AT FENCE CORNER OR ANGLE BREAK

FENCE PANEL TYPES

① LIMIT RUN LENGTHS IN POOR SOIL CONDITIONS TO REDUCE RESULTING TENSION AT CORNER OR ANGLE BREAK PANELS.

② TIE OFF ON ALL CROSS HATCHED OR SHADED POSTS.

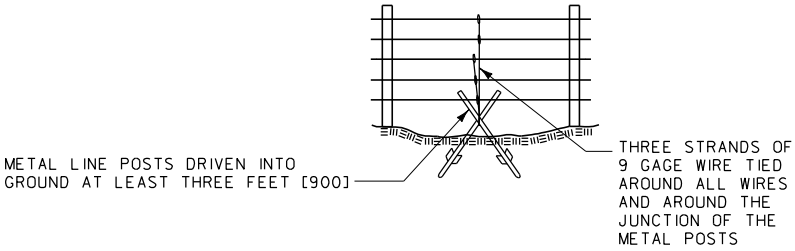

ALTERNATE DEADMAN

WHEN APPROVED BY THE PROJECT MANAGER THE ABOVE DEADMAN MAY BE USED IN LIEU OF A ROCK OR PRECAST CONCRETE BLOCK AS SPECIFIED ON DTL. DWG. NO. 607-05.

UNITS SHOWN IN BRACKETS [] ARE METRIC AND ARE IN MILLIMETERS (mm) UNLESS OTHER UNITS ARE SHOWN.

NOTES:

① ATTACH BARBED WIRES TO POSTS BY WRAPPING AROUND THE POST AT LEAST TWO TIMES, THEN WRAPPING AROUND ITSELF FIVE TIMES.

② TO ATTACH WOVEN WIRE TO AN END POST, REMOVE TWO OR THREE VERTICAL STAY WIRES FROM THE END OF THE FENCE. PLACE THE FIRST COMPLETE VERTICAL STAY WIRE AGAINST THE POST. START AT THE MIDDLE OF THE HORIZONTAL LINE WIRES, WRAPPING AROUND THE END POST AT LEAST TWO TIMES AND THEN WRAPPING AROUND ITSELF FIVE TIMES.

DETAILED DRAWING	
REFERENCE STANDARD SPEC. SECTION 607	DWG. NO. 607-10
FENCING DETAILS	
--REVISED-- MAY 2011	EFFECTIVE: FEBRUARY 2005
	MDT MONTANA DEPARTMENT OF TRANSPORTATION

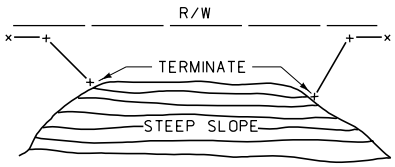

SLOPE MUST BE STEEP ENOUGH TO DETER PASSAGE OF TRESPASSERS.

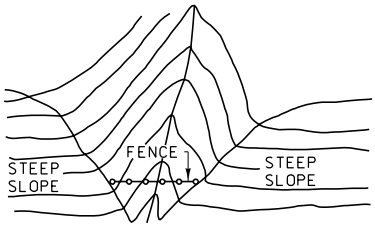

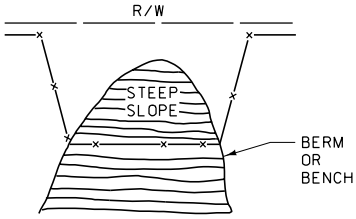

FENCE LAYOUT ON STEEP SLOPES

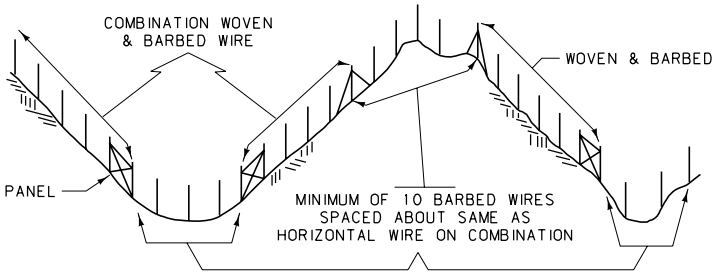

FENCE LAYOUT ON SHARP VERTICAL CURVES

TO AVOID TRYING TO CONFORM WOVEN WIRE TO UNEVEN TERRAIN

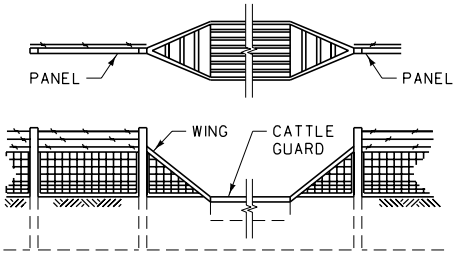

FENCE CONNECTION TO CATTLE GUARD

SECURELY FASTEN FENCE WIRE TO THE WINGS AND ARRANGE SO THAT ANIMALS CANNOT PASS.

* 300 mm OFFSET APPLIES TO INTERSTATE FENCING ONLY.

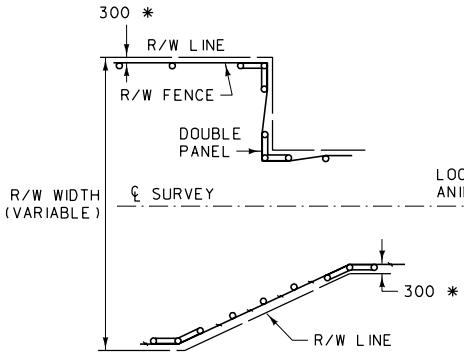

FENCE LAYOUT AT CHANGE IN R/W WIDTH

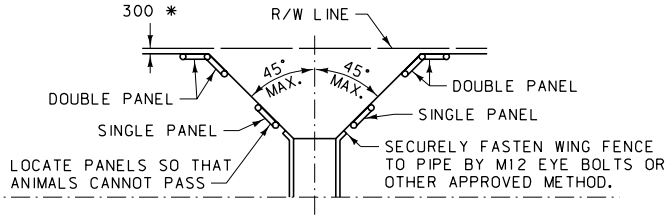

FENCE LAYOUT AT STOCKPASS, BRIDGES AND LARGE PIPES

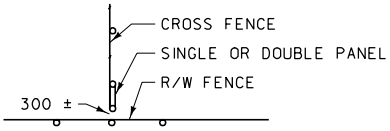

FENCE LAYOUT AT CROSS-FENCE CONNECTION

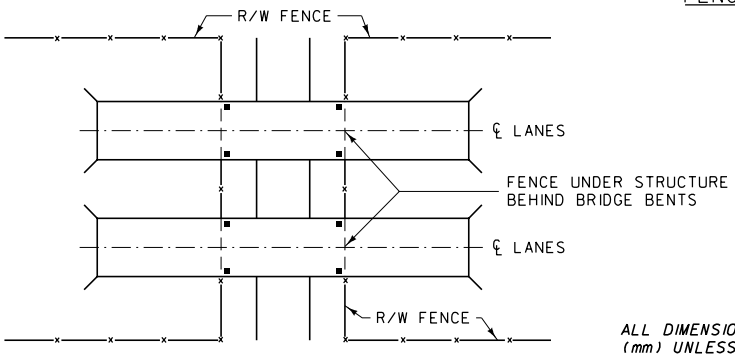

FENCE LAYOUT AT LOCAL ROAD UNDER INTERSTATE

NOTES:

INSTALL NON-INTERSTATE FENCE ON THE RIGHT-OF-WAY LINE.

DO NOT DAMAGE SURVEY MONUMENTS.

ALL DIMENSIONS ARE MILLIMETERS (mm) UNLESS OTHERWISE NOTED.

DETAILED DRAWING	
REFERENCE STANDARD SPEC. SECTION 607	DWG. NO. 607-15
FENCING DETAILS	
--REVISED-- October 2008	EFFECTIVE: FEBRUARY 2005
	MDT serving you with pride — MONTANA DEPARTMENT OF TRANSPORTATION

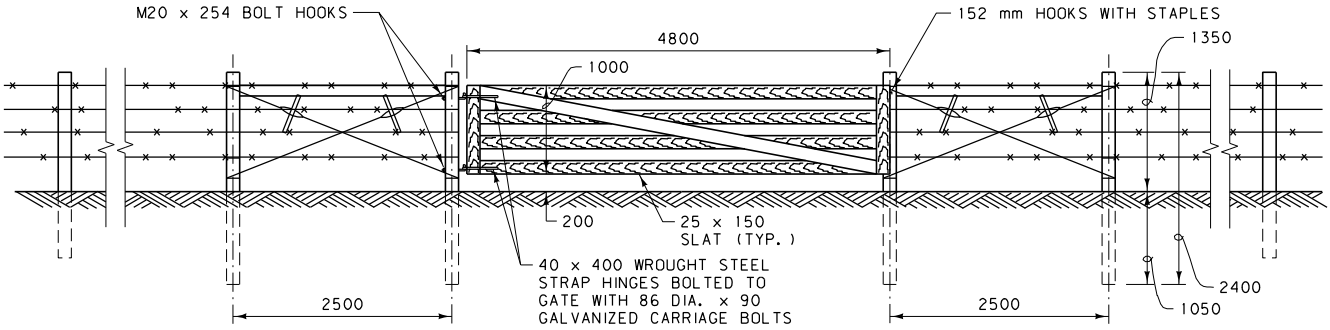

WOOD FARM ENTRANCE GATE (TYPE G-1)

NOTE: USE 10d NAILS AND CLINCH FOR GATE CONSTRUCTION.

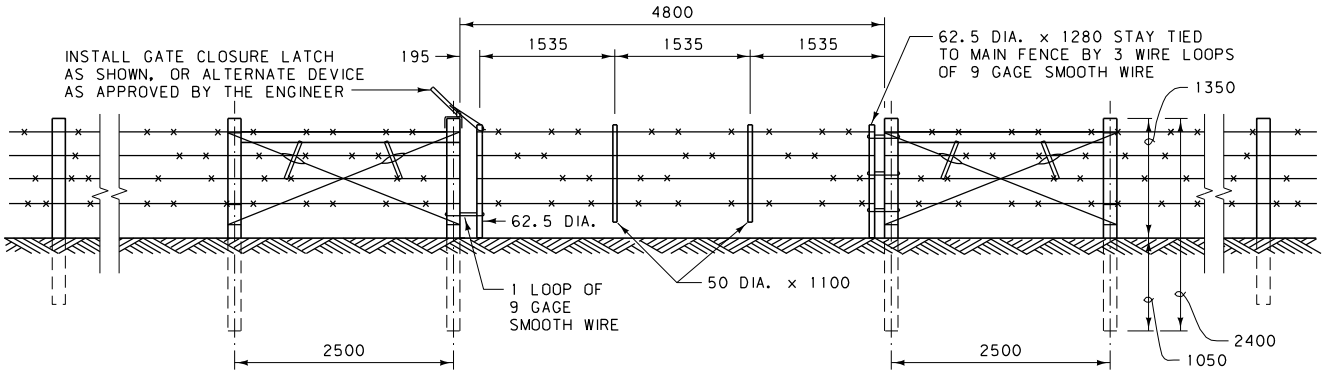

WIRE FARM ENTRANCE GATE (TYPE G-2)

NOTE:
USE SAME WIRE SCHEME ON GATE
AS THAT USED ON FENCE, UNLESS
STATED OTHERWISE IN R/W AGREEMENT.

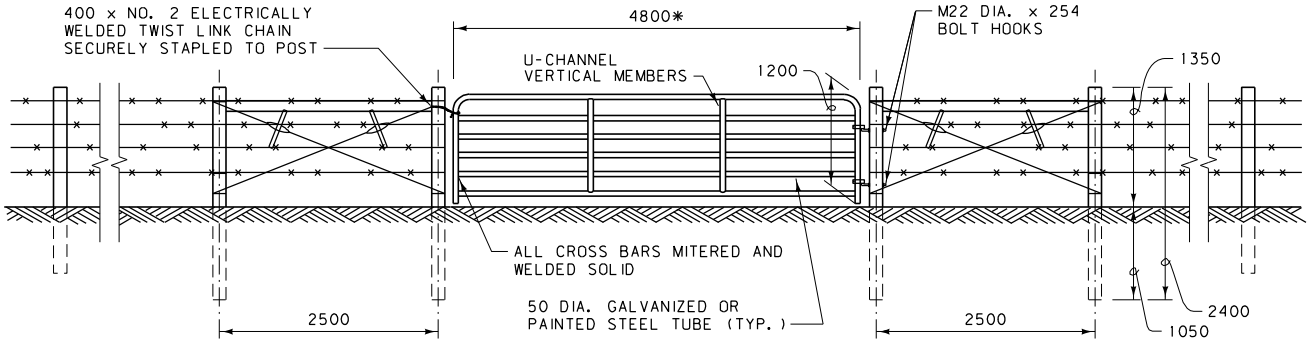

METAL FARM ENTRANCE GATE (TYPE G-3)

NOTES:

ALL GATES ARE 4800 mm WIDE UNLESS R/W AGREEMENT STATES OTHERWISE.

ALL GATES WILL HAVE A SINGLE OR DOUBLE PANEL AT EACH END.

* TYPE G-3 GATES ARE AVAILABLE IN WIDTHS FROM 1.2 m TO 6.0 m IN 0.6 m INCREMENTS.

ALL DIMENSIONS ARE MILLIMETERS (mm) UNLESS OTHERWISE NOTED.

DETAILED DRAWING	
REFERENCE STANDARD SPEC. SECTION 607	DWG. NO. 607-20
FARM ENTRANCE GATES	
EFFECTIVE: FEBRUARY 2005	

serving you with pride — MONTANA DEPARTMENT OF TRANSPORTATION

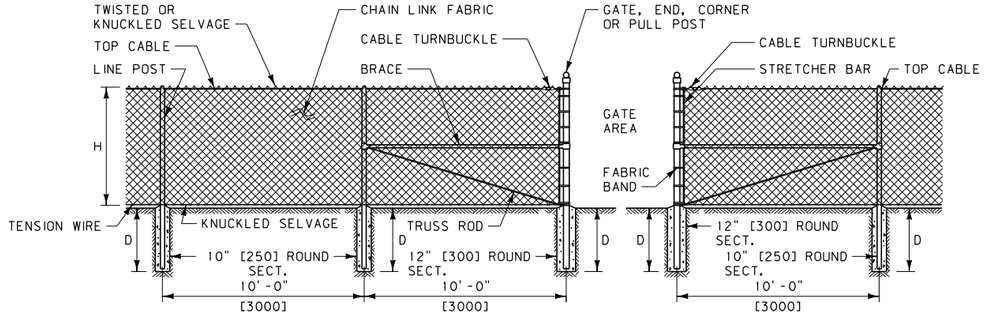

CHAIN LINK FENCE - 6' [1.8 m] AND 8' [2.4 m]

SINGLE PANEL

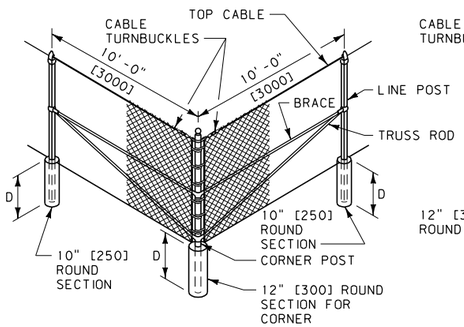

DOUBLE PANEL

PULL POST AND CORNER POST BRACING

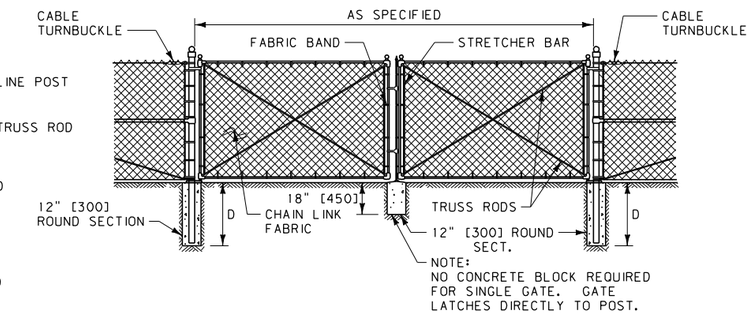

GATES

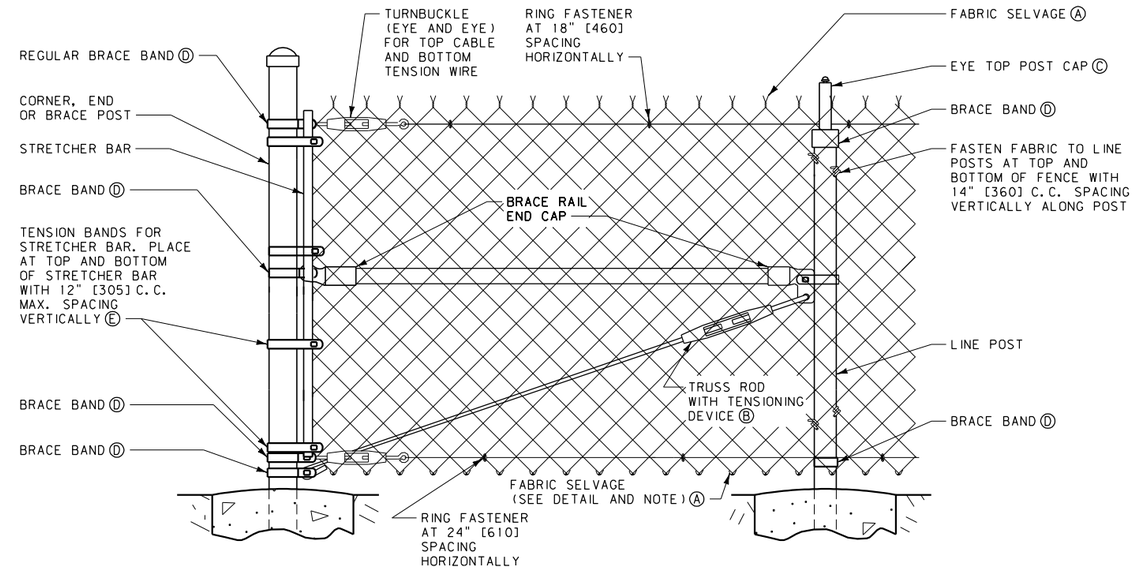

CONNECTION DETAILS

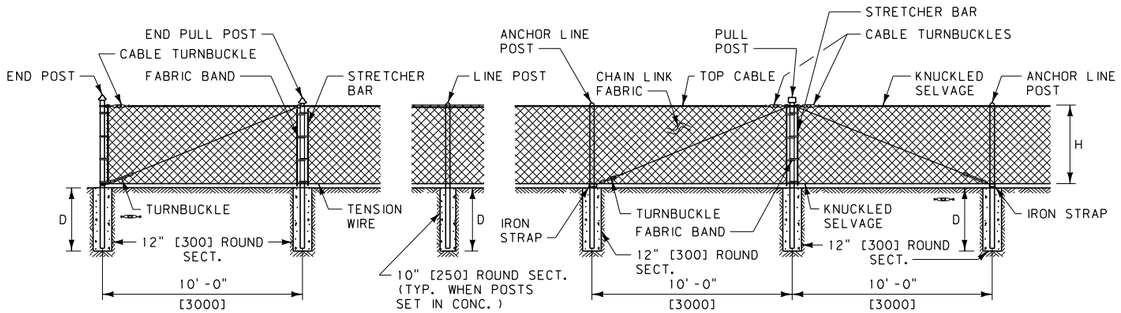

CHAIN LINK FENCE - 3' [0.9 m], 4' [1.2 m] AND 5' [1.5 m]

GENERAL NOTES

PROVIDE CHAIN LINK FENCE MATERIALS PER SECTION 712.

Ⓐ FABRIC SELVAGE: FENCE HEIGHT UNDER 6' [1.8 m]: TOP AND BOTTOM KNUCKLED SELVAGE.

FENCH HEIGHT 6' [1.8 m] AND OVER:
TOP - TWIST SELVAGE
BOTTOM - KNUCKLED SELVAGE

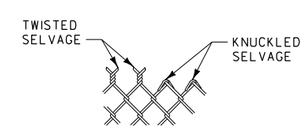

SELVAGE DETAIL

Ⓑ TRUSS RODS: SEE SECTION 712.01.4

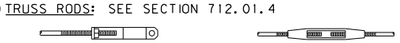

INDUSTRIAL TRUSS TIGHTENER TURNBUCKLE

Ⓒ POST CAPS: PROVIDE EYE-TOP CAPS FOR ALL POSTS CARRYING A TOP CABLE THROUGH THE POST. PROVIDE ROUNDED TOPS FOR ALL OTHER ROUND POSTS. FIT POST CAPS TIGHTLY TO PREVENT REMOVAL.

Ⓓ BRACE BANDS: SEE SECTION 712.01.5.

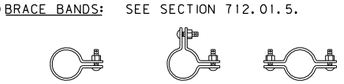

BRACE BAND DETAIL

Ⓔ TENSION BANDS: SEE SECTION 712.01.5

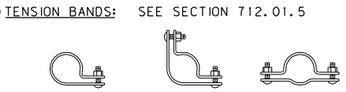

TENSION BAND DETAIL

NOTES:

① DO NOT INSTALL DOUBLE PANELS MORE THAN 300' [90 m] APART ON TANGENTS OR MORE THAN 250' [75 m] APART ON ANY CURVE. FOR CURVES WITH RADII SHARPER THAN 1150' [350 m], INSTALL A DOUBLE PANEL ON EACH CURVE END, PLUS ONE ADDITIONAL PANEL FOR EACH 10° OF DEFLECTION, EVENLY SPACED, BETWEEN THE CURVE ENDS.

② PULL POST BRACING ON 6' [1.8 m] AND 8' [2.4 m] FENCE IS THE SAME AS CORNER BRACING.

③ A DROP BAR LOCKING DEVICE IS REQUIRED FOR ALL DOUBLE GATE INSTALLATIONS. THE DROP BAR MUST BE ABLE TO BE INSERTED INTO THE CONCRETE BLOCK AT LEAST SIX INCHES [150].

④ ALL CONCRETE IS CLASS "F" OR BETTER.

⑤ INSTALL A 3/8" [10] DIAMETER GALVANIZED STEEL TOP CABLE ALONG ALL FENCE. TERMINATE TOP CABLE WITH GALVANIZED CABLE TURNBUCKLES FASTENED VIA THE FABRIC BAND AT THE POST.

HEIGHT OF FABRIC, H	WIRE FABRIC ABOVE GROUND	DEPTH OF CONCRETE, D	DEPTH OF POST IN CONC. (MIN.)
8' [2440]	1"-2" [25-50]	42" [1050]	38" [950]
6' [1830]	1"-2" [25-50]	36" [900]	32" [800]
5' [1525]	1"-2" [25-50]	36" [900]	32" [800]
4' [1220]	1"-2" [25-50]	30" [750]	26" [650]
3' [915]	1"-2" [25-50]	30" [750]	26" [650]

UNITS SHOWN IN BRACKETS [] ARE METRIC AND ARE IN MILLIMETERS (mm) UNLESS OTHER UNITS ARE SHOWN.

DETAILED DRAWING

REFERENCE STANDARD SPEC. SECTION 607

DWG. NO. 607-25

CHAIN LINK FENCE

--REVISED--
MAY 2009
MAY 2011

EFFECTIVE: APRIL 2006

MDT MONTANA DEPARTMENT OF TRANSPORTATION

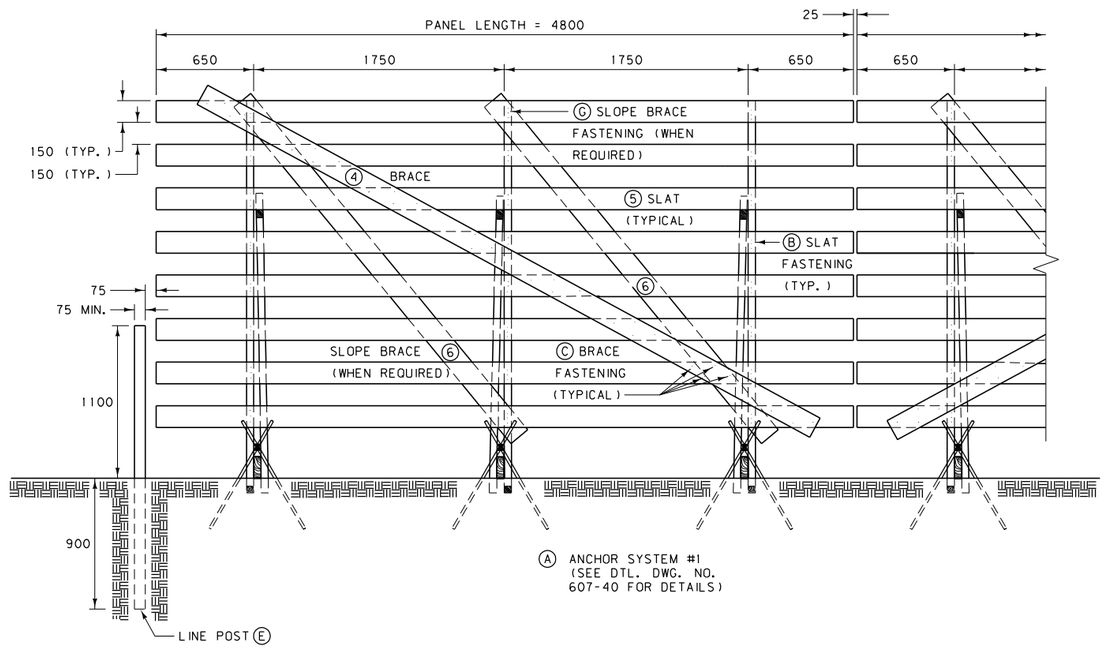

FRONT VIEW

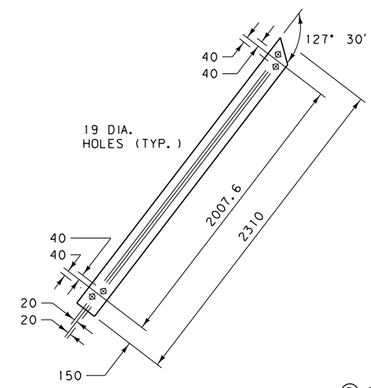

② FRAME

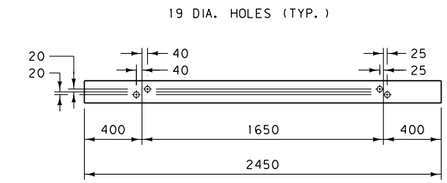

① SILL

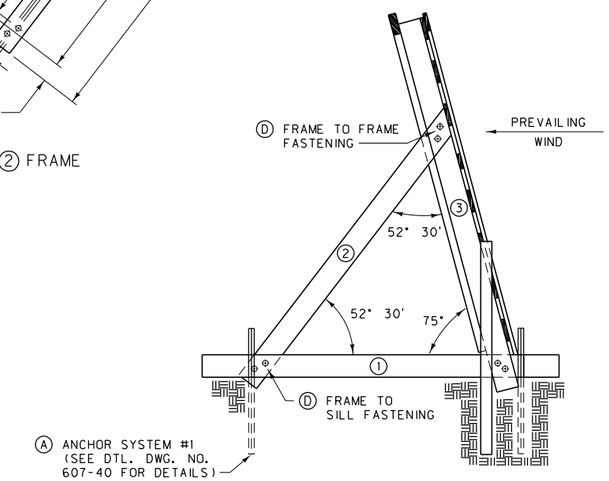

END VIEW

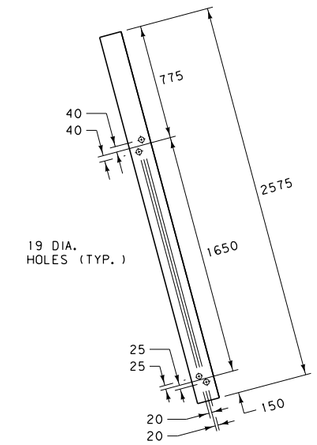

③ FRAME

GENERAL NOTES

Ⓐ ANCHOR SYSTEM DETAIL
USE ANCHOR SYSTEM #1 UNLESS SOIL AND MOISTURE CONDITIONS NECESSITATE THE USE OF AN ALTERNATE SYSTEM, OR AS DIRECTED BY THE ENGINEER. CONSULT DETAILED DRAWING NUMBERS 607-40 AND 607-45 FOR ANCHOR SYSTEMS #3 (ROCKY CONDITIONS) AND #2 (SWAMPY CONDITIONS).

Ⓑ SLAT FASTENING
FASTEN SLATS TO THE FRAME WITH 3 ~ 12d COMMON BARBED SHANK NAILS AT EACH LOCATION.

Ⓒ BRACE FASTENING
FASTEN BRACES TO THE FRAME WITH 4 ~ 8d COMMON NAILS AT EACH LOCATION AND CLINCH.

Ⓓ FRAME TO SILL AND FRAME TO FRAME FASTENING
FASTEN THE SILL AND FRAME MEMBERS TO THE FRAME AT EACH LOCATION WITH 2 ~ M16 x 127 mm STANDARD MACHINE BOLTS, EACH WITH HEX NUT AND TWO FLAT WASHERS. SEE NOTE Ⓧ AT RIGHT.

Ⓔ LINE POSTS
PLACE LINE POSTS AT EACH END OF EACH LINE OF SNOW FENCE AS SHOWN. POSTS ARE 2000 mm LONG WITH A MINIMUM DIAMETER OF 75 mm AND A MAXIMUM DIAMETER OF 150 mm. BUTT TREAT 900 mm MINIMUM.

Ⓕ WIRE TIE
USE 12 GAGE OR HEAVIER GALVANIZED WIRE TO FORM THE WIRE TIES.

Ⓖ SLOPE BRACE FASTENING
FASTEN SLOPE BRACES WITH 3 ~ 16d COMMON BARBED SHANK NAILS AT EACH LOCATION.

LUMBER - 2.4 m SNOW FENCE W/ ANCHOR SYSTEM #1			
BILL OF MATERIALS FOR ONE PANEL			
ITEM NO.	NO. OF PIECES	LUMBER SIZE	DESCRIPTION
①*	3	50 x 150 x 2450	FRAME (SILL)
②*	3	50 x 150 x 2310	FRAME
③*	3	50 x 150 x 2575	FRAME
* NOTE: PRESSURE TREAT ALL 50 x 150 MEMBERS (ENTIRE FRAME)			
④	1	25 x 150 x 4800	BRACE
⑤	8	25 x 150 x 4800	SLAT
⑥**	2	50 x 150 x 3000	SLOPE BRACE
** NOTE: USE ONLY WHEN SLOPE IS 5:1 OR GREATER			

HARDWARE - 2.4 m SNOW FENCE W/ ANCHOR SYSTEM #1		
BILL OF MATERIALS FOR ONE PANEL		
	QUANTITY	DESCRIPTION
Ⓓ	18	M16 x 127 HEX BOLT (THREADED FULL LENGTH) AND NUT
Ⓓ	36	FLAT WASHER FOR M16 BOLT
Ⓑ	0.50 kg	12d COMMON BARBED SHANK NAIL
Ⓐ	12	#19 REBAR x 1500
Ⓕ	6 PIECES	12 GAGE TIE WIRE x 1500 ±
Ⓒ	0.15 kg	8d COMMON NAILS
Ⓖ	0.11 kg	16d COMMON BARBED SHANK NAILS

ALL NAILS MAY BE EITHER HAND DRIVEN OR DRIVEN WITH A PNEUMATIC NAILER.

Ⓧ NOTE:
AFTER M16 BOLTS HAVE BEEN TIGHTENED, BURR THE THREAD DIRECTLY BEHIND THE NUT TO PREVENT EVENTUAL LOOSENING OF THE NUTS.

ALL DIMENSIONS ARE MILLIMETERS (mm) UNLESS OTHERWISE NOTED.

DETAILED DRAWING

REFERENCE
STANDARD SPEC.
SECTION 607

DWG. NO.
607-30

2.4 m WOOD SNOW FENCE
W/ ANCHOR SYSTEM #1

EFFECTIVE: FEBRUARY 2005

MDT serving you with pride
MONTANA DEPARTMENT OF TRANSPORTATION

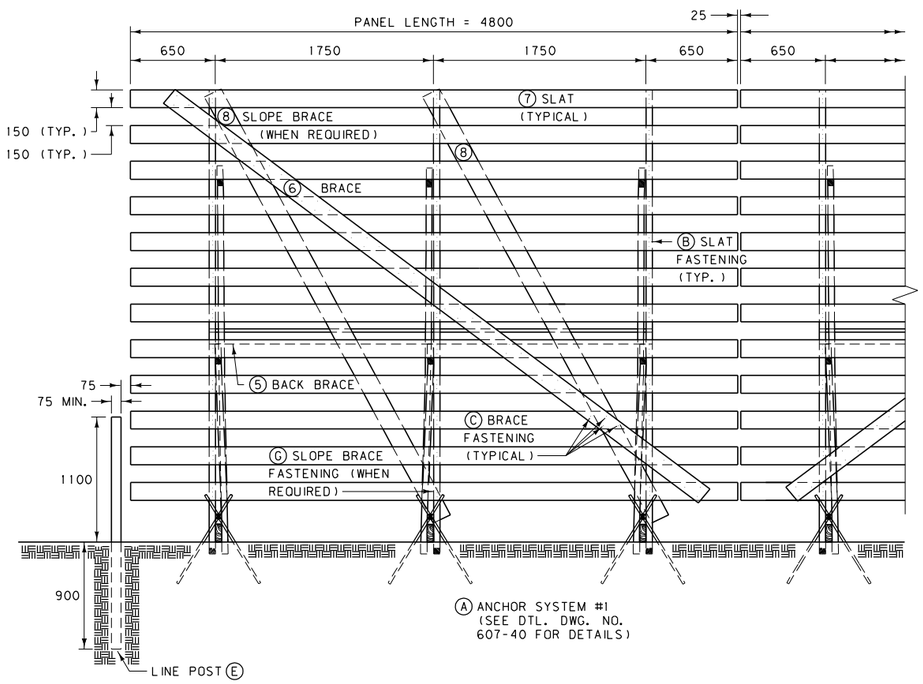

FRONT VIEW

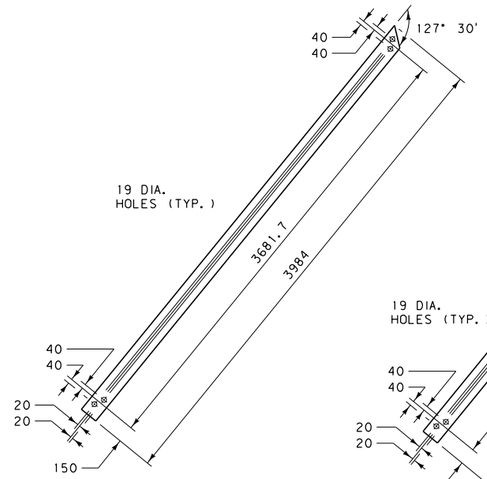

③ FRAME

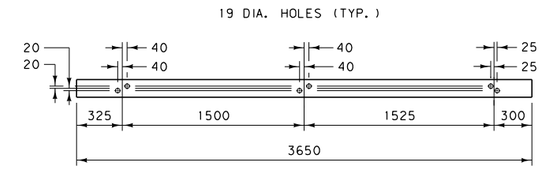

① SILL

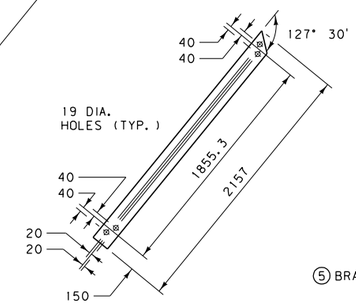

② FRAME

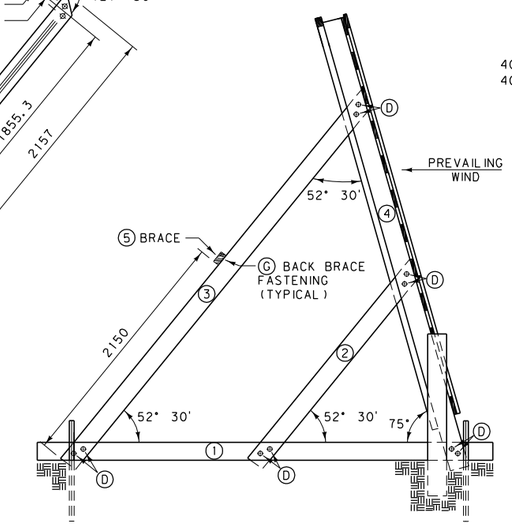

NOTE:
PLACEMENT OF REBAR ANCHORS TIGHT AGAINST SNOW FENCE MEMBERS ① ③ & ④ IS CRITICAL TO PREVENT OVERTURNING AND SLIDING. SEE ANCHOR SYSTEM #1 DETAILS, DTL. DWG. NO. 607-40.

DIG OUT AS REQUIRED FOR ENDS OF MEMBERS ② ③ & ④ AND THE ENTIRE LENGTH OF SILL ① TO ASSURE FULL BEARING OF SILL AGAINST TERRAIN.

END VIEW

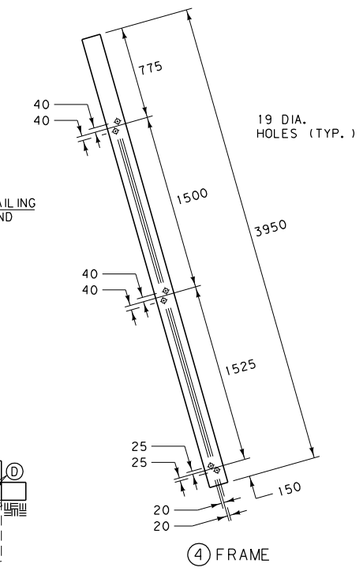

④ FRAME

GENERAL NOTES

Ⓐ ANCHOR SYSTEM DETAIL
USE ANCHOR SYSTEM #1 UNLESS SOIL AND MOISTURE CONDITIONS NECESSITATE THE USE OF AN ALTERNATE SYSTEM, OR AS DIRECTED BY THE ENGINEER. CONSULT DETAILED DRAWING NUMBERS 607-40 AND 607-45 FOR ANCHOR SYSTEMS #3 (ROCKY CONDITIONS) AND #2 (SWAMPY CONDITIONS).

Ⓑ SLAT FASTENING
FASTEN SLATS TO THE FRAME WITH 3 ~ 12d COMMON BARBED SHANK NAILS AT EACH LOCATION.

Ⓒ BRACE FASTENING
FASTEN BRACES TO THE FRAME WITH 4 ~ 8d COMMON NAILS AT EACH LOCATION AND CLINCH.

Ⓓ FRAME TO SILL AND FRAME TO FRAME FASTENING
FASTEN THE SILL AND FRAME MEMBERS TO THE FRAME AT EACH LOCATION WITH 2 ~ M16 x 127 mm STANDARD MACHINE BOLTS, EACH WITH HEX NUT AND TWO FLAT WASHERS. SEE NOTE Ⓧ AT RIGHT.

Ⓔ LINE POSTS
PLACE LINE POSTS AT EACH END OF EACH LINE OF SNOW FENCE AS SHOWN. POSTS ARE 2000 mm LONG WITH A MINIMUM DIAMETER OF 75 mm AND A MAXIMUM DIAMETER OF 150 mm. BUTT TREAT 900 mm MINIMUM.

Ⓕ WIRE TIE
USE 12 GAGE OR HEAVIER GALVANIZED WIRE TO FORM THE WIRE TIES.

Ⓖ BACK & SLOPE BRACE FASTENING
FASTEN BACK BRACES TO THE FRAME WITH 2 ~ 16d NAILS, AND FASTEN THE SLOPE BRACES WITH 3 ~ 16d BARBED SHANK NAILS AT EACH LOCATION.

LUMBER - 3.6 m SNOW FENCE W/ ANCHOR SYSTEM #1			
BILL OF MATERIALS FOR ONE PANEL			
ITEM NO.	NO. OF PIECES	LUMBER SIZE	DESCRIPTION
①*	3	50 x 150 x 3650	SILL
②*	3	50 x 150 x 2157	FRAME
③*	3	50 x 150 x 3984	FRAME
④*	3	50 x 150 x 3950	FRAME
* NOTE: PRESSURE TREAT ALL 50 x 150 MEMBERS (ENTIRE FRAME)			
⑤	1	50 x 100 x 3650	BACK BRACE
⑥	1	25 x 150 x 5400	BRACE
⑦	12	25 x 150 x 4800	SLAT
⑧**	2	50 x 150 x 4000	SLOPE BRACE
** NOTE: USE ONLY WHEN SLOPE IS 5:1 OR GREATER			

HARDWARE - 3.6 m SNOW FENCE W/ ANCHOR SYSTEM #1		
BILL OF MATERIALS FOR ONE PANEL		
	QUANTITY	DESCRIPTION
Ⓓ	30	M16 x 127 HEX BOLT (THREADED FULL LENGTH) AND NUT
Ⓓ	60	FLAT WASHER FOR M16 BOLT
Ⓒ	0.23 kg	8d COMMON NAILS
Ⓑ	0.76 kg	12d COMMON BARBED SHANK NAILS
Ⓖ	0.23 kg	16d COMMON BARBED SHANK NAILS
Ⓐ	12	#19 REBAR x 1500
Ⓕ	6 PIECES	12 GAGE TIE WIRE x 1500 ±

ALL NAILS MAY BE EITHER HAND DRIVEN OR DRIVEN WITH A PNEUMATIC NAILER.

Ⓧ NOTE:
AFTER M16 BOLTS HAVE BEEN TIGHTENED, BURR THE THREAD DIRECTLY BEHIND THE NUT TO PREVENT EVENTUAL LOOSENING OF THE NUTS.

ALL DIMENSIONS ARE MILLIMETERS (mm) UNLESS OTHERWISE NOTED.

DETAILED DRAWING

REFERENCE
STANDARD SPEC.
SECTION 607

DWG. NO.
607-35

3.6 m WOOD SNOW FENCE
W/ ANCHOR SYSTEM #1

EFFECTIVE: FEBRUARY 2005

serving you with pride

MONTANA DEPARTMENT OF TRANSPORTATION

ANCHOR SYSTEM #3
(FOR ROCKY CONDITIONS)

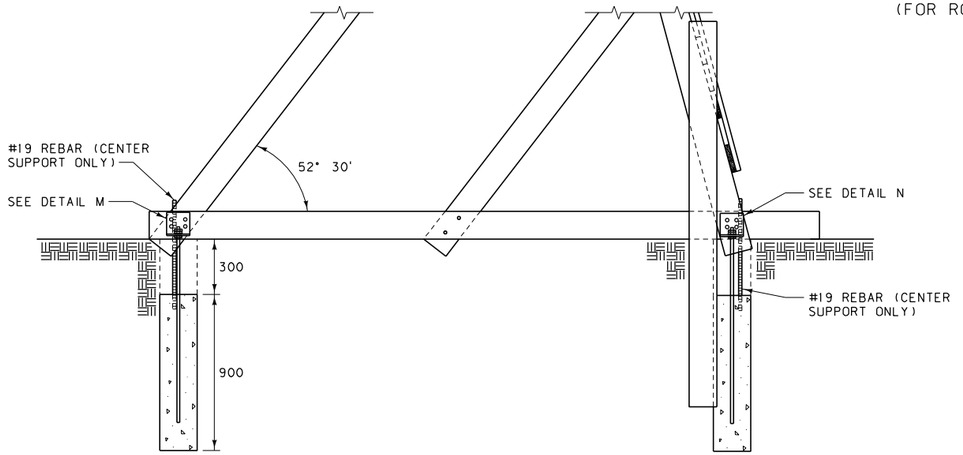

LEFT END VIEW

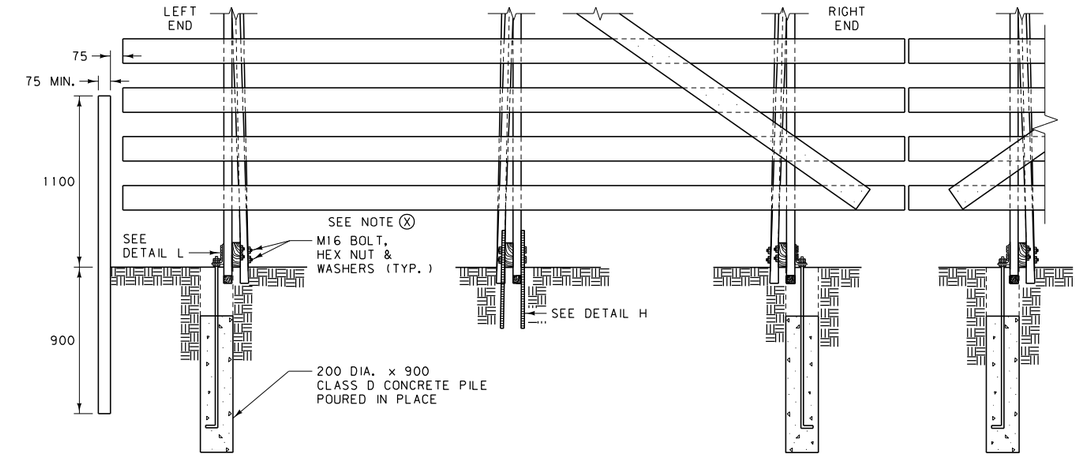

FRONT VIEW

NOTE:
HOLES SHOWN IN DETAILS BELOW ARE FOR LEFT END OF FENCE.
HOLES SHOWN HIDDEN ARE FOR RIGHT END OF FENCE.

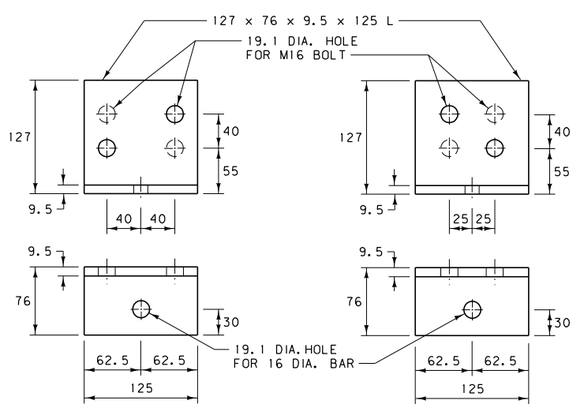

DETAIL M DETAIL N

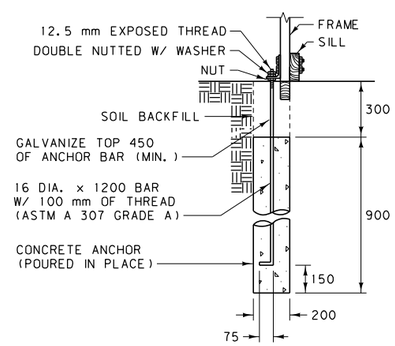

DETAIL L

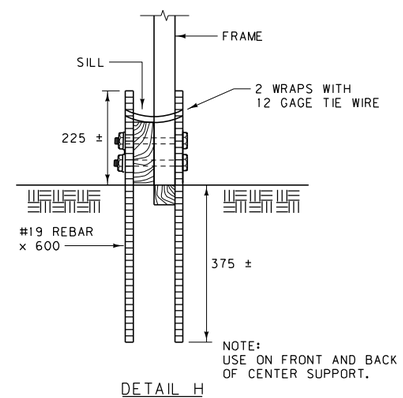

DETAIL H

LUMBER - SNOW FENCE W/ ANCHOR SYSTEM #3
BILL OF MATERIALS FOR ONE PANEL
SAME AS FOR SNOW FENCE W/ ANCHOR SYSTEM #1

HARDWARE - SNOW FENCE W/ ANCHOR SYSTEM #3	
BILL OF MATERIALS FOR ONE PANEL	
QUANTITY	DESCRIPTION
4	127 x 76 x 9.5 x 127.0 L
4	16 DIA. x 1200 BAR W/ 3 HEX NUTS
4	FLAT WASHERS FOR 16 DIA. BAR
0.113 m³	CLASS D CONCRETE
4	#19 REBAR x 600
4 PIECES	12 GAGE TIE WIRE x 600 ±
30	M16 x 127 HEX BOLT (THREADED FULL LENGTH) AND NUT
60	FLAT WASHERS FOR M16 BOLT
NOTE: NAILS REQUIRED ARE SAME AS SHOWN ON HARDWARE SUMMARY FOR SNOW FENCE W/ ANCHOR SYSTEM #1	

SEE NOTE Ⓧ BELOW

Ⓧ NOTE:
AFTER M16 BOLTS HAVE BEEN TIGHTENED, BURR THE THREAD DIRECTLY BEHIND THE NUT TO PREVENT EVENTUAL LOOSENING OF THE NUTS.

ANCHOR SYSTEM #1
(STANDARD)

STEP ①

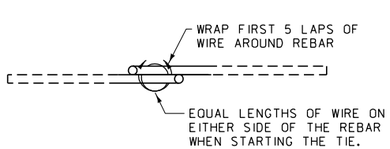

TOP

STEP ②

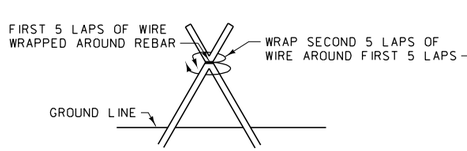

FRONT

STEP ③

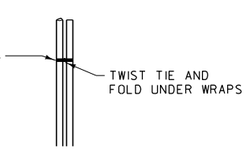

SIDE

WIRE TIE DETAIL
USE 12 GAGE OR HEAVIER GALVANIZED WIRE TO FORM THE WIRE TIES.

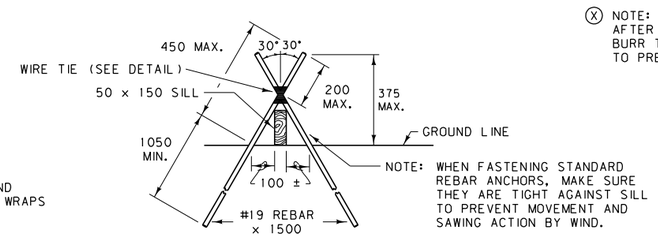

USE TWO #19 REINFORCING BARS FOR EACH END OF EACH SILL MEMBER. DRIVE THE BARS UP TIGHT TO THE FRAME TO PREVENT SLIDING. TIE THE REINFORCING BARS AS SHOWN IN THE WIRE TIE DETAIL. THE PLACEMENT OF THE ANCHORS IS CRITICAL IN PREVENTING OVERTURNING AND SLIDING OF THE FENCE.

STANDARD ANCHOR DETAIL

ALL DIMENSIONS ARE MILLIMETERS (mm) UNLESS OTHERWISE NOTED.

DETAILED DRAWING	
REFERENCE STANDARD SPEC. SECTION 607	DWG. NO. 607-40
WOOD SNOW FENCE ANCHOR SYSTEM #3 AND #1 DETAILS	
EFFECTIVE: FEBRUARY 2005	
serving you with pride	MONTANA DEPARTMENT OF TRANSPORTATION

ANCHOR SYSTEM #2
(FOR SWAMPY CONDITIONS)

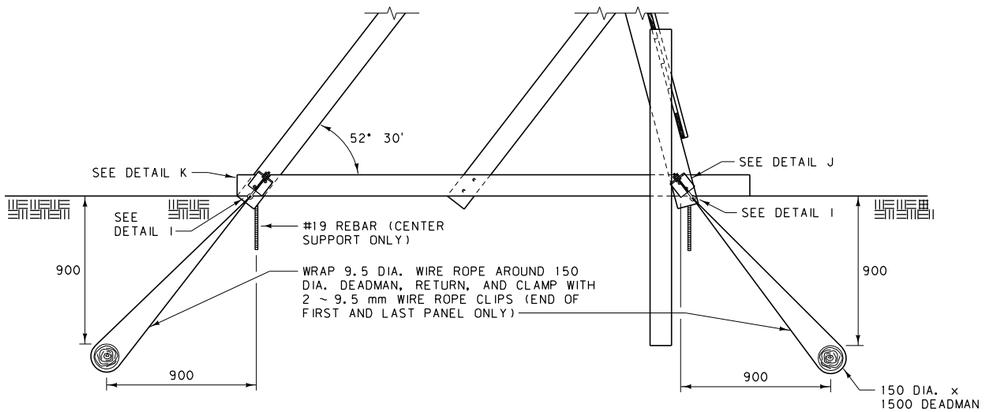

LEFT END VIEW

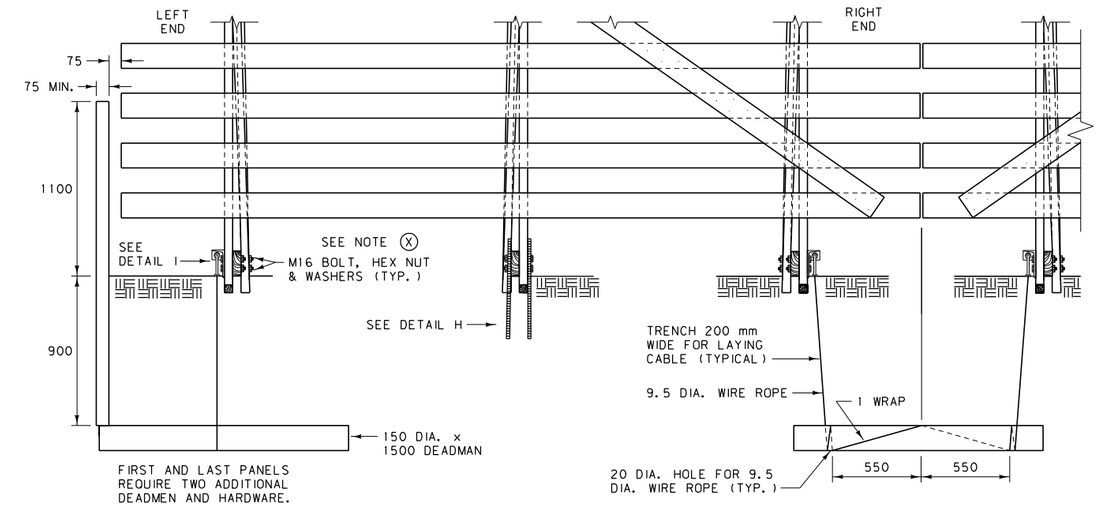

FRONT VIEW

NOTE:
HOLES SHOWN IN DETAILS BELOW ARE FOR LEFT END OF FENCE.
HOLES SHOWN HIDDEN ARE FOR RIGHT END OF FENCE.

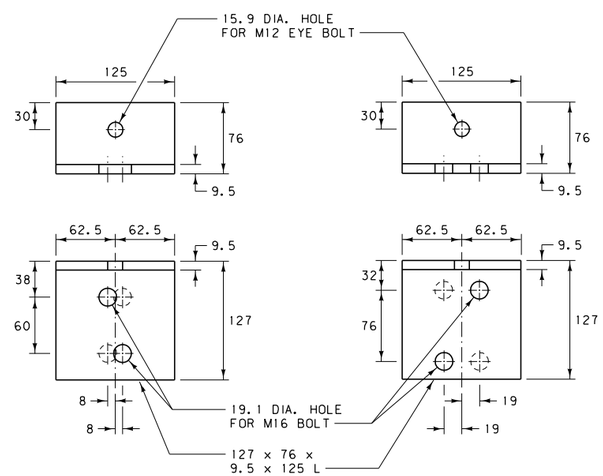

DETAIL J

DETAIL K

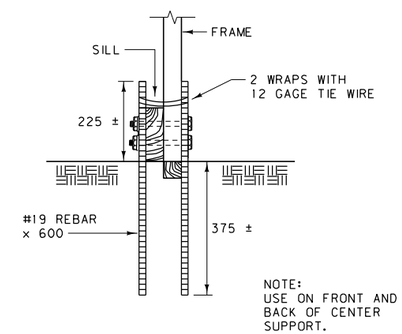

DETAIL H

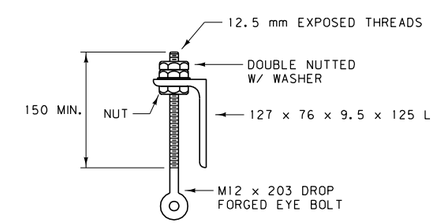

DETAIL I

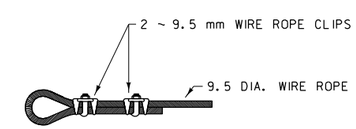

WIRE ROPE CONNECTION

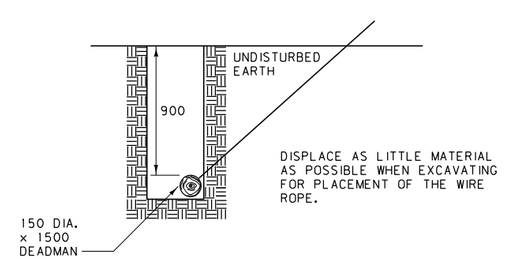

DEADMAN DETAIL

LUMBER - SNOW FENCE W/ ANCHOR SYSTEM #2
BILL OF MATERIALS FOR ONE PANEL
SAME AS FOR SNOW FENCE W/ ANCHOR SYSTEM #1

HARDWARE - SNOW FENCE W/ ANCHOR SYSTEM #2	
BILL OF MATERIALS FOR ONE PANEL	
QUANTITY	DESCRIPTION
4	127 x 76 x 9.5 x 127.0 L
8	9.5 mm WIRE CLAMPS
4	M12 DROP FORGED EYEBOLTS W/ 3 HEX NUTS
4	FLAT WASHERS FOR M12 EYEBOLTS
4	#19 REBAR x 600
4 PIECES	12 GAGE TIE WIRE x 600 ±
8500 mm	9.5 DIA. WIRE ROPE
2	150 DIA. x 1500 POST DEADMEN
30	M16 x 127 HEX BOLT (THREADED FULL LENGTH) AND NUT
60	FLAT WASHERS FOR M16 BOLT
NOTE: NAILS REQUIRED ARE SAME AS SHOWN ON HARDWARE SUMMARY FOR SNOW FENCE W/ ANCHOR SYSTEM #1	

X NOTE:
AFTER M16 BOLTS HAVE BEEN TIGHTENED, BURR THE THREAD DIRECTLY BEHIND THE NUT TO PREVENT EVENTUAL LOOSENING OF THE NUTS.

ALL DIMENSIONS ARE MILLIMETERS (mm) UNLESS OTHERWISE NOTED.

DETAILED DRAWING

REFERENCE STANDARD SPEC. SECTION 607

DWG. NO. 607-45

WOOD SNOW FENCE ANCHOR SYSTEM #2 DETAILS

EFFECTIVE: FEBRUARY 2005

MDT serving you with pride — MONTANA DEPARTMENT OF TRANSPORTATION

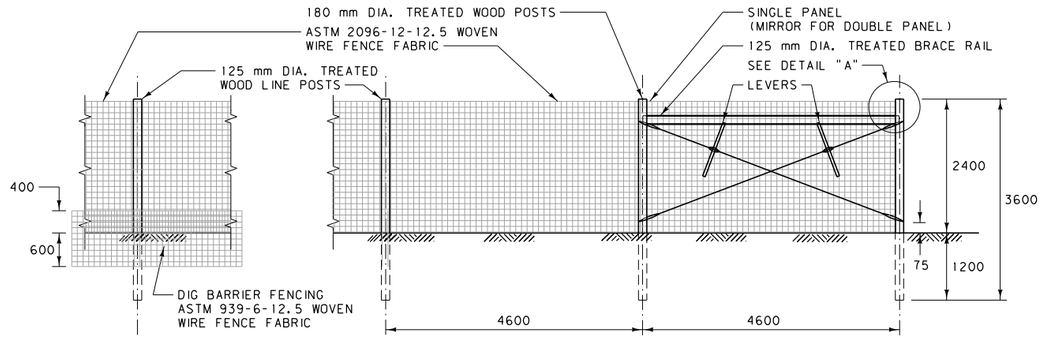

WILDLIFE FENCE W/ DIG BARRIER

PANELS NOT SHOWN

WILDLIFE FENCE

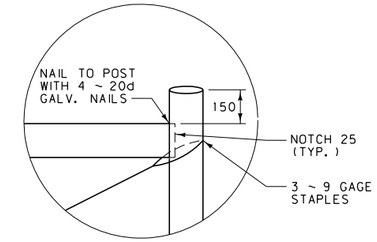

DETAIL "A"

BRACE WIRES - ONE CONTINUOUS 9 OR 12.5 GAGE SMOOTH WIRE DOUBLED TO FORM A FOUR WIRE BRACE. TIE THE TWO ENDS NEAR THE TOP OF THE PANEL POSTS.

LEVERS - 37.5 x 50 x 300 MINIMUM SIZE.

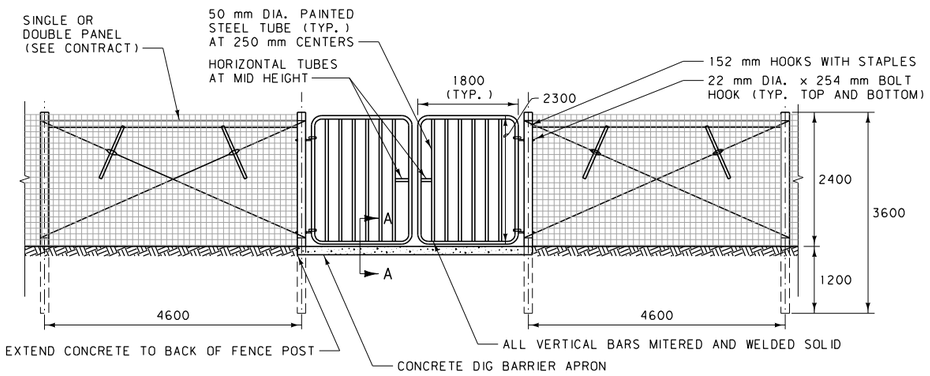

METAL MAINTENANCE ACCESS GATE

CHAIN AND LOCK TO BE SUPPLIED BY MDT FORCES

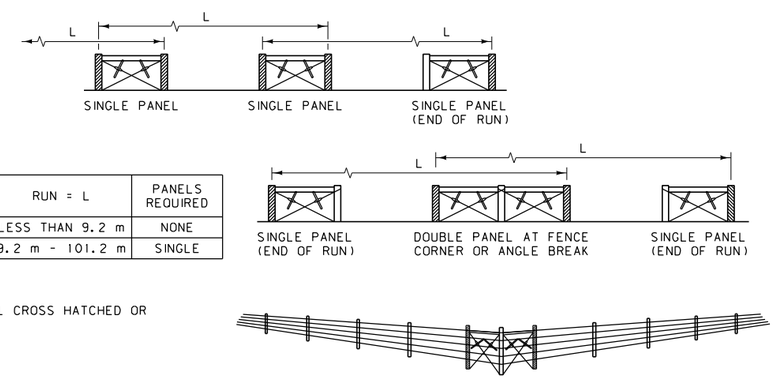

FENCE TYPE	RUN = L	PANELS REQUIRED
WILDLIFE	LESS THAN 9.2 m	NONE
	9.2 m - 101.2 m	SINGLE

NOTE:

TIE OFF ON ALL CROSS HATCHED OR SHADED POSTS.

FENCE PANEL TYPES

NOTES:

PLACE ALL FENCE WIRE ON PASTURE SIDE OF POST, EXCEPT ON CURVES. THEN, PLACE THE WIRE ON THE OUTSIDE OF THE CURVE.

POST SPACING IS GENERALLY MEASURED PARALLEL TO GROUND.

LINE POST SPACING IS 4600 mm CENTER TO CENTER. LINE POST SPACING FROM BRACE OR PANEL POST IS 4600 mm CENTER TO CENTER.

TO ATTACH WOVEN WIRE TO AN END POST, REMOVE TWO OR THREE VERTICAL STAY WIRES FROM THE END OF THE FENCE. PLACE THE FIRST COMPLETE VERTICAL STAY WIRE AGAINST THE POST. START AT THE MIDDLE OF THE HORIZONTAL LINE WIRES, WRAPPING AROUND THE END POST AT LEAST TWO TIMES AND THEN WRAPPING AROUND ITSELF FIVE TIMES.

A DEADMAN MAY BE A PRECAST CONCRETE BLOCK, A CAST IN PLACE CONCRETE BLOCK, A ROCK OR OTHER APPROVED OBJECT WEIGHING AT LEAST 120 kg. BURY THE DEADMAN IN THE GROUND WITH AT LEAST 600 mm OF COVER. ATTACH THE DEADMAN TO THE FENCE WITH 3 STRANDS OF 9 GAGE WIRE OR 6 STRANDS OF 12.5 GAGE WIRE. SEE DTL. DWG. NO. 607-10 FOR ALTERNATE DEADMAN.

STAPLE THE BOTTOM, TOP, CENTER AND ALTERNATE WIRES OF WOVEN WIRE TO WOOD LINE POSTS.

STAPLE ALL WIRES OF WOVEN WIRE TO WOOD CORNER POSTS OR POST USED TO TIE-OFF WIRE.

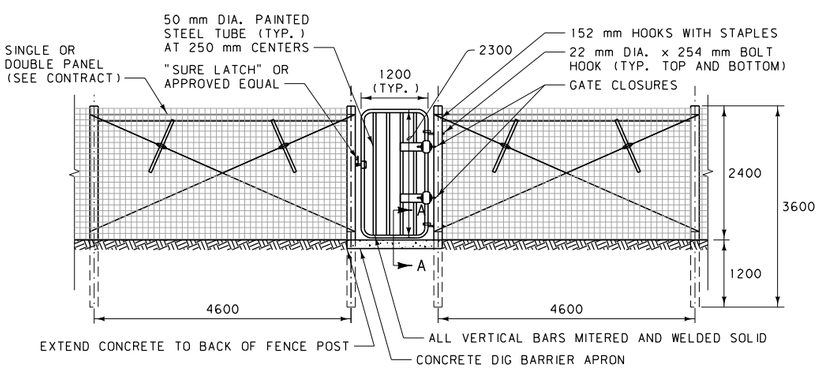

METAL EQUINE GATE

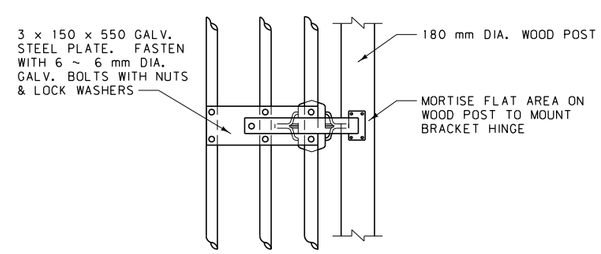

TIE BAR MOUNTING DETAIL FOR GATE CLOSERS

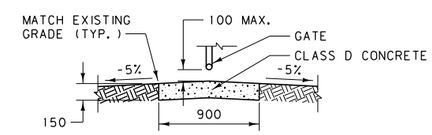

SECTION A-A

CENTER CONCRETE DIG BARRIER APRON UNDER CLOSED GATE

ALL DIMENSIONS ARE MILLIMETERS (mm) UNLESS OTHERWISE NOTED.

DETAILED DRAWING	
REFERENCE STANDARD SPEC. SECTION 607	DWG. NO. 607-50
WILDLIFE FENCE	
--REVISED-- January 2008	EFFECTIVE: APRIL 2006
	MDT serving you with pride — MONTANA DEPARTMENT OF TRANSPORTATION