DETAILED DRAWINGS

SUPPLEMENT TO

2005 METRIC EDITION

EFFECTIVE: APRIL 2006

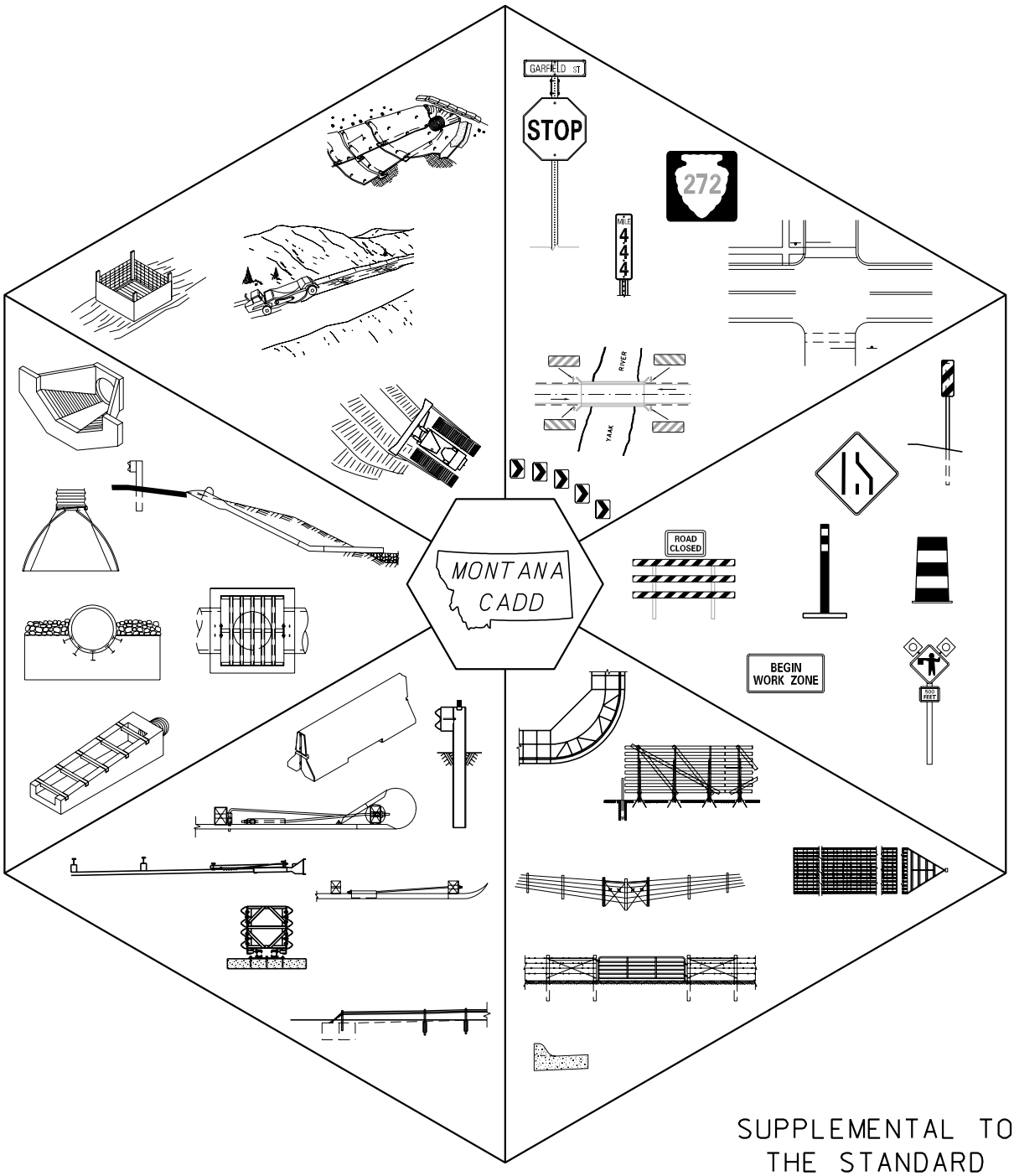

SUPPLEMENTAL TO
THE STANDARD
SPECIFICATIONS FOR
ROAD AND BRIDGE
CONSTRUCTION

serving you with pride

MONTANA DEPARTMENT
OF TRANSPORTATION

DETAILED DRAWINGS

TABLE OF CONTENTS

SUPPLEMENT TO 2005 METRIC EDITION
EFFECTIVE: APRIL 2006

STANDARD SPECIFICATION SECTION AND DRAWING TITLE	DRAWING NUMBER
SECTION 101: DEFINITIONS AND TERMS	
ABBREVIATIONS	101–05
ABBREVIATIONS	101–06
ABBREVIATIONS	101–07
ABBREVIATIONS	101–08
SYMBOLS	101–10
SECTION 203: EXCAVATION AND EMBANKMENT	
ROADWAY EMBANKMENT AT BRIDGE END	203–00
APPROACHES	203–05
MAILBOX TURNOUT	203–15
DITCH BLOCKS	203–20
SECTION 208: WATER POLLUTION CONTROL AND STREAM PRESERVATION	
SCHEDULE OF BEST MANAGEMENT PRACTICES	208–00
INLET/OUTLET PROTECTION	208–1A
WATERWAY PROTECTION	208–1B
WATER RESOURCE PROTECTION	208–1C
PRESERVATION OF EXISTING VEGETATION (SS–2)	208–02
HYDRAULIC MULCH (SS–3)	208–04
TEMPORARY SEEDING (SS–4)	208–06
SOIL BINDERS (SS–5)	208–08
STRAW MULCH (SS–6)	208–10
EROSION CONTROL BLANKETS /MATS, PLASTIC COVERS & GEOTEXTILES (SS–7)	208–12A
EROSION CONTROL BLANKETS /MATS, PLASTIC COVERS & GEOTEXTILES (SS–7)	208–12B
WOOD MULCH (SS–8)	208–14
EARTH DIKES /DRAINAGE SWALES & LINED DITCHES (SS–9)	208–16
OUTLET PROTECTION /VELOCITY DISSIPATION DEVICES (SS–10)	208–18
SLOPE DRAINS (SS–11)	208–20
SLOPE ROUGHENING (SS–12)	208–22
TERRACED SLOPES (SS–13)	208–24
VEGETATED BUFFER (SS–14)	208–26
EROSION SEEDING (SS–15)	208–28
SILT FENCE (SC–1)	208–30
DESILTING BASIN (SC–2)	208–32A
DESILTING BASIN (SC–2)	208–32B
SEDIMENT TRAP (SC–3)	208–34
CHECK DAMS (SC–4)	208–36
FIBER ROLLS (SC–5)	208–38
GRAVEL BAG BERM (SC–6)	208–40
SAND BAG BARRIERS (SC–8)	208–42

STANDARD SPECIFICATION SECTION AND DRAWING TITLE	DRAWING NUMBER

STRAW BALE BARRIERS (SC–9) 208–44
STORM DRAIN INLET PROTECTION (SC–10) 208–46A
STORM DRAIN INLET PROTECTION (SC–10) 208–46B
DUGOUT DITCH BASIN (SC–11) 208–48
WIND EROSION CONTROL (WE–1) 208–50
SNOW ACCUMULATION MANAGEMENT (SN–2) 208–52
FREEZE REDUCTION (SN–3) 208–54
STABALIZED CONSTRUCTION ENTRANCE / EXIT (TC–1) 208–56
ENTRANCE / EXIT TIRE WASH (TC–3) 208–58
TEMPORARY STREAM CROSSINGS (NS–4) 208–60

SECTION 401: COLD MILLING

SHOULDER RUMBLE STRIPS 401–02

SECTION 552: CONCRETE STRUCTURES

CONCRETE CUTOFF WALLS FOR CULVERTS 552–00
CONCRETE, RIPRAP AND BEDDING MATERIAL QUANTITIES FOR SING. AND DBL. CULVERT INSTALLATION 552–04
CONCRETE, RIPRAP AND BEDDING MATERIAL QUANTITIES FOR SING. AND DBL. CULVERT INSTALLATION 552–06
CONCRETE, RIPRAP AND BEDDING MATERIAL QUANTITIES FOR SING. AND DBL. CULVERT INSTALLATION 552–08

SECTION 603: CULVERTS, STORM DRAINS, SANITARY SEWERS, STOCKPASSES AND UNDERPASSES

CMP FLARED END TERMINAL SECTION (FETS) 603–02
PREFABRICATED RCP FLARED END TERMINAL SECTION (FETS) 603–08
PREFABRICATED RCP ARCH FLARED END TERMINAL SECTION (FETS) 603–10
RCP ROAD APPROACH CULVERT END TREATMENT (RACET) 603–12
CMP ROAD APPROACH CULVERT END TREATMENT (RACET) 603–14
PRECAST MEDIAN U–TURN CROSS DRAIN AND CONC. BEVELED END 603–17
CULVERT BEDDING FOR MAINLINE CROSSINGS 1200 mm EQUIVALENT & SMALLER 603–18
CULVERT BEDDING FOR MAINLINE CROSSINGS 1350 mm EQUIVALENT & LARGER 603–19
WATER TIGHT JOINT FOR REINFORCED CONCRETE PIPE 603–22
REINFORCED CONCRETE PIPE JOINT 603–24
TYPICAL FIELD CAST CONCRETE CONNECTIONS 603–26
EMBANKMENT PROTECTOR 603–28
VEHICULAR UNDERPASS AND BACKFILL RETAINER & CUTOFF WALL DETAIL 603–30
STEP BEVEL FOR CIRCULAR METAL CULVERT 603–32
BEVEL ON ARCH METAL CULVERT 603–34
CORRUGATED STEEL PIPE STOCKPASS 603–36

SECTION 604: MANHOLES, COMBINATION MANHOLES AND INLETS, AND INLETS

MEDIAN INLET COVER 604–00
CONCRETE MANHOLE 604–02
CURB INLET TYPE II 604–03
DROP INLET TYPE IV 604–04
TYPE IV DROP INLET WITH SLOTTED DRAIN 604–06
TYPE II CURB INLET WITH SLOTTED DRAIN 604–08

STANDARD SPECIFICATION SECTION AND DRAWING TITLE	DRAWING NUMBER
DROP INLETS	604–14

SECTION 606: GUARDRAIL AND CONCRETE BARRIER RAIL

METAL GUARDRAIL – WOOD POSTS	606–05A
METAL GUARDRAIL – STEEL POSTS	606–05B
STIFFENED GUARDRAIL SECTIONS	606–07
NESTED W–BEAM GUARDRAIL	606–09
METAL GUARDRAIL – 2.1 m WOOD POSTS	606–11A
METAL GUARDRAIL – 2.1 m STEEL POSTS	606–11B
OPTIONAL TERMINAL SECTION – ET–PLUS	606–13A
OPTIONAL TERMINAL SECTION – SKT 350	606–13B
ONE–WAY DEPARTURE TERMINAL SECTION	606–18
BRIDGE APPROACH SECTIONS – WOOD POSTS	606–24A
BRIDGE APPROACH SECTIONS – STEEL POSTS	606–24B
SKEWED BRIDGE APPROACH SECTIONS – WOOD POSTS	606–25A
SKEWED BRIDGE APPROACH SECTIONS – STEEL POSTS	606–25B
TAPERED CONCRETE CURB DETAIL	606–26
TAPERED CONCRETE CURB DETAIL	606–27
IMPACT ATTENUATOR – QUADGUARD	606–30A
IMPACT ATTENUATOR – TRACC	606–30B
IMPACT ATTENUATOR – QUEST	606–30C
IMPACT ATTENUATOR – QUADGUARD ASSEMBLY DETAILS	606–31A
IMPACT ATTENUATOR – TRACC ASSEMBLY DETAILS	606–31B
IMPACT ATTENUATOR – QUEST ASSEMBLY DETAILS	606–31C
CABLE GUARDRAIL	606–40
CABLE GUARDRAIL TERMINAL ANCHOR ASSEMBLY	606–41
INTERSECTING ROADWAY TERMINAL SECTION	606–46
BOX BEAM GUARDRAIL	606–50
BOX BEAM ONE–WAY DEPARTURE TERMINAL SECTION	606–52
BOX BEAM BRIDGE APPROACH SECTIONS	606–53
BOX BEAM ONE–WAY BRIDGE DEPARTURE SECTION	606–54
OPTIONAL BOX BEAM TERMINAL SECTION – WY–BET	606–55A
OPTIONAL BOX BEAM TERMINAL SECTION – BEAT	606–55B
WY–BET BOX BEAM TERMINAL SECTION DETAILS	606–56A
BEAT BOX BEAM TERMINAL SECTION DETAILS	606–56B
BOX BEAM TO W–BEAM TRANSITION SECTION	606–58
CONCRETE BARRIER RAIL	606–60
ALTERNATE CONCRETE BARRIER RAIL	606–61
CONCRETE BARRIER RAIL ANCHORS	606–62
TALL CONCRETE BARRIER RAIL	606–64
ALTERNATE TALL CONCRETE BARRIER RAIL	606–65
CONCRETE BARRIER RAIL TRANSITION	606–66
CONCRETE BARRIER RAIL TERMINAL SECTION (ONE–WAY DEPARTURE)	606–68
SCHEDULE OF GUARDRAIL HARDWARE	606–80
GUARDRAIL HARDWARE	606–82
W–BEAM METAL GUARDRAIL HARDWARE	606–84
W–BEAM METAL GUARDRAIL HARDWARE	606–88
CABLE GUARDRAIL HARDWARE	606–92
CABLE GUARDRAIL HARDWARE	606–94

STANDARD SPECIFICATION SECTION AND DRAWING TITLE	DRAWING NUMBER

CABLE GUARDRAIL HARDWARE 606–95
BOX BEAM GUARDRAIL HARDWARE 606–97
BOX BEAM GUARDRAIL HARDWARE 606–98

SECTION 607: FENCES

FARM FENCE 607–00
INTERSTATE FENCE 607–05
FENCING DETAILS 607–10
FENCING DETAILS 607–15
FARM ENTRANCE GATES 607–20
CHAIN LINK FENCE 607–25
2.4 m WOOD SNOW FENCE W/ ANCHOR SYSTEM #1 607–30
3.6 m WOOD SNOW FENCE W/ ANCHOR SYSTEM #1 607–35
WOOD SNOW FENCE ANCHOR SYSTEM #3 AND #1 DETAILS 607–40
WOOD SNOW FENCE ANCHOR SYSTEM #2 DETAILS 607–45
WILDLIFE FENCE 607–50

SECTION 608: CONCRETE SIDEWALKS

CONCRETE SIDEWALK 608–05
NEW CONSTRUCTION PUBLIC SIDEWALK CURB RAMPS 608–15
ALTERATIONS TO EXISTING FACILITIES – PUBLIC SIDEWALK CURB RAMPS 608–20
PERPENDICULAR PUBLIC SIDEWALK CURB RAMPS 608–25
PARALLEL PUBLIC SIDEWALK CURB RAMPS 608–30
DIAGONAL PERPENDICULAR PUBLIC SIDEWALK CURB RAMPS 608–35
TRUNCATED DOMES 608–40

SECTION 609: CURBS AND GUTTERS

CONCRETE VALLEY GUTTER 609–00
MISCELLANEOUS CURBS 609–05
MEDIAN CONCRETE CURBS 609–10
CONCRETE MEDIAN CAPS 609–12

SECTION 610: ROADSIDE RE–VEGETATION

TOPSOIL AND SEEDING 610–00

SECTION 611: CATTLE GUARDS

CAST–IN–PLACE CATTLE GUARD 611–00
CAST–IN–PLACE CATTLE GUARD REBAR DETAILS 611–05
PRECAST CONCRETE BASE FOR CATTLE GUARD – APPROACHES 611–10
PRECAST CONCRETE BASE FOR CATTLE GUARD 611–15
PRECAST CONCRETE CATTLE GUARD BASE DETAILS 611–20

SECTION 613: RIPRAP AND SLOPE AND BANK PROTECTION

CONCRETE EDGE PROTECTION FOR METAL CULVERTS 613–06
CONCRETE EDGE PROTECTION FOR CONCRETE CULVERTS 613–08
CONCRETE SLOPE PROTECTION 613–10
INLET AND OUTLET HEADWALLS FOR RCP AND CMP PIPES 613–12
CULVERT RIPRAP 613–14

STANDARD SPECIFICATION SECTION AND DRAWING TITLE	DRAWING NUMBER

EMBANKMENT PROTECTION 613–16
CONCRETE DRAINAGE CHUTE 613–18

SECTION 615: IRRIGATION FACILITIES AND HEADWALLS

TRASHGUARD FOR CONCRETE IRRIGATION INLET AND OUTLET TRANSITION STRUCTURES 615–02
STANDARD CONCRETE IRRIGATION DIVISION BOXES 615–04
CONCRETE IRRIGATION INLET AND OUTLET TRANSITION FOR RCP AND CSP PIPES 615–06

SECTION 617: TRAFFIC SIGNALS AND LIGHTING

ROAD CLOSURE GATE 617–00
ROAD CLOSURE GATE DETAILS 617–02
ROAD CLOSURE GATE PIVOT ASSEMBLY 617–04
ROAD CLOSURE GATE PIVOT ASSEMBLY DETAILS 617–06
FOUR BOLT SLIP BASE 617–08
FOUR BOLT SLIP BASE DETAILS 617–10

SECTION 618: TRAFFIC CONTROL

BARRICADES, CHANNELIZING DEVICES AND OBJECT MARKERS 618–00
CONSTRUCTION SIGN DETAILS 618–01
PORTABLE SIGN SUPPORT ASSEMBLY 618–02
TWO–LANE CONSTRUCTION PROJECT 618–04
TWO–LANE CONSTRUCTION PROJECT WORK ZONES 618–08
TWO–LANE CONSTRUCTION PROJECT SEAL COAT 618–10
TWO–LANE CONSTRUCTION PROJECT LANE CLOSURE – FLAGGER CONTROLLED 618–12
TWO–LANE CONSTRUCTION PROJECT LANE CLOSURE – SIGNAL CONTROLLED 618–13
TWO–LANE EQUIPMENT ENTRANCES 618–14
TWO–LANE EQUIPMENT ENTRANCES 618–16
TWO–LANE CONSTRUCTION PROJECT DETOUR 618–18
DIVIDED FOUR–LANE CONSTRUCTION PROJECT 618–20
TEMPORARY ENTRANCE RAMP MEDIAN CROSSING 618–21
TEMPORARY EXIT RAMP MEDIAN CROSSING 618–22
DIVIDED FOUR–LANE CONSTRUCTION PROJECT WORK ZONES 618–24
DIVIDED FOUR–LANE EQUIPMENT ENTRANCES 618–27
DIVIDED FOUR–LANE MEDIAN CROSSINGS 618–28
TEMPORARY FOUR–LANE TO TWO–LANE MEDIAN CROSSING 618–30
TEMPORARY TWO–LANE TO FOUR–LANE MEDIAN CROSSING 618–32
SHORT DURATION CREW SIGNING 618–34
SHORT–TERM STATIONARY CREW SIGNING 618–36
MAINTENANCE GUIDELINE FOR SHORT–TERM TWO–LANE CRACK SEALING WORK ZONE 618–M1
MAINTENANCE GUIDELINE FOR SHORT–TERM TWO–LANE CHIP SEAL AND OVERLAY (PILOTED TRAFFIC) 618–M2
MAINTENANCE GUIDELINE FOR SHORT–TERM LANE CLOSURE ON INTERSTATE 618–M3

SECTION 619: SIGNS, DELINEATORS AND GUIDEPOSTS

SIGN CLEARANCES AND MOUNTING HEIGHTS 619–00
TYPICAL RURAL AND URBAN APPROACHES 619–02

STANDARD SPECIFICATION SECTION AND DRAWING TITLE	DRAWING NUMBER

ALUMINUM SHEET INCREMENT SIGN CONSTRUCTION DETAILS 619–04
PLYWOOD SHEET INCREMENT GUIDE SIGN CONSTRUCTION DETAILS 619–06
GUIDE SIGN CLEARANCE AND MOUNTING DETAILS 619–08
SHEET ALUMINUM OVERLAY 619–10
TUBULAR SIGN POST DETAILS 619–12
BREAKAWAY AND FOUNDATION DETAILS FOR MULTIPLE GUIDE SIGN SUPPORTS 619–13
TYPICAL STEEL POST MOUNTING DETAILS 619–16
CANTILEVER TYPE SIGN SUPPORT DETAILS FOR SIDEWALK AREAS 619–18
STRUCTURAL STEEL POST SIGN MOUNTING DETAILS 619–19
TREATED WOOD POLE SIGN MOUNTING AND SUPPORT DETAILS 619–20
TREATED WOOD POLE SIGN MOUNTING DETAILS 619–21
TREATED WOOD POLE OPTIONAL BACKBRACE 619–22
CHEVRON MOUNTING DETAILS 619–24
SPECIAL DESIGN ROUTE MARKER PANELS AND SHIELDS 619–26
SIGN HINGE DETAILS 619–30
REFERENCE POST DETAILS 619–32
DELINEATOR DETAILS 619–34
DELINEATOR PLACEMENT DETAILS 619–36
OBJECT MARKER DESIGN AND PLACEMENT DETAILS FOR OBSTRUCTIONS ADJACENT TO OR WITHIN HIGHWAYS 619–38
FLEXIBLE DELINEATORS 619–40
PERMANENT BARRICADE DESIGN DETAILS 619–42
INSTALLATION DATE TAGS 619–44

SECTION 620: PAVEMENT MARKING APPLICATION

PAVEMENT MARKINGS (LETTERS) 620–00
PAVEMENT MARKINGS (NUMBERS) 620–05
PAVEMENT MARKINGS (WORDS) 620–10
PAVEMENT MARKINGS (ARROWS) 620–15
PAVEMENT MARKINGS (SYMBOLS) 620–20

SECTION 621: REMOVE, RE–SET AND ADJUST FACILITIES

MANHOLE AND VALVE BOX ADJUSTMENT DETAILS 621–00
OPTIONAL MANHOLE AND VALVE BOX ADJUSTMENT DETAILS 621–05

MISCELLANEOUS

U–TURN MEDIAN OPENINGS ON CONTROLLED ACCESS HIGHWAYS 900–00
MAILBOX DETAIL 900–05
OPTIONAL MAILBOX DETAIL 900–10
ADJUSTABLE MONUMENT BOXES 900–15

SCHEDULE OF BEST MANAGEMENT PRACTICES (BMPs)		
NAME	DESCRIPTION	DTL. DWG. NO. (208-##)
GENERAL BMP's		
IO	INLET/OUTLET PROTECTION	1A
WP	WATERWAY PROTECTION	1B
WR	WATER RESOURCE PROTECTION	1C
TEMPORARY SOIL STABILIZATION BMPs (SS)		
SS-2	PRESERVATION OF EXISTING VEGETATION	02
SS-3	HYDRAULIC MULCH	04
SS-4	TEMPORARY SEEDING	06
SS-5	SOIL BINDERS	08
SS-6	STRAW MULCH	10
SS-7	EROSION CONT. BLANKETS/MATS, PLASTIC COVERS & GEOTEXTILES	12A & 12B
SS-8	WOOD MULCH	14
SS-9	EARTH DIKES/DRAINAGE SWALES & LINED DITCHES	16
SS-10	OUTLET PROTECTION/VELOCITY DISSIPATION DEVICES	18
SS-11	SLOPE DRAINS	20
SS-12	SLOPE ROUGHENING	22
SS-13	TERRACED SLOPES	24
SS-14	VEGETATED BUFFER	26
SS-15	EROSION SEEDING	28
TEMPORARY SEDIMENT CONTROL BMPs (SC)		
SC-1	SILT FENCE	30
SC-2	DESILTING BASIN	32A & 32B
SC-3	SEDIMENT TRAP	34
SC-4	CHECK DAMS	36
SC-5	FIBER ROLLS	38
SC-6	GRAVEL BAG BERM	40
SC-8	SAND BAG BARRIERS	42
SC-9	STRAW BALE BARRIERS	44
SC-10	STORM DRAIN INLET PROTECTION	46A & 46B
SC-11	DUGOUT DITCH BASIN	48
WIND EROSION CONTROL BMPs (WE)		
WE-1	WIND EROSION CONTROL	50
SNOW ACCUMULATION & SNOW MELT BMPs (SN)		
SN-2	SNOW ACCUMULATION MANAGEMENT	52
SN-3	FREEZE REDUCTION	54
TRACKING CONTROL BMPs (TC)		
TC-1	STABILIZED CONSTRUCTION ENTRANCE/EXIT	56
TC-3	ENTRANCE/OUTLET TIRE WASH	58
NON-STORM WATER MANAGEMENT BMPs (NS)		
NS-4	TEMPORARY STREAM CROSSINGS	60

ALL DIMENSIONS ARE MILLIMETERS (mm) UNLESS OTHERWISE NOTED.

DETAILED DRAWING

REFERENCE
STANDARD SPEC.
SECTION 208

DWG. NO.
208-00

SCHEDULE OF
BEST MANAGEMENT PRACTICES

EFFECTIVE: APRIL 2006

serving you with pride

MONTANA DEPARTMENT OF TRANSPORTATION

SYMBOL: ———— EC ————

EROSION CONTROL BLANKETS/MATS, PLASTIC COVERS, & GEOTEXTILES SS-7:

EROSION CONTROL BLANKETS/MATS, PLASTIC COVERS, & PERMANENT EROSION CONTROL GEOTEXTILES ARE USED TO STABILIZE DISTURBED SOIL AREAS AND PROTECT SOILS FROM EROSION BY WIND AND WATER. THESE PRODUCTS CAN BE USED ON STEEP SLOPES, SLOPES WITH HIGH EROSION HAZARDS, SLOPES WHERE MULCHES CAN NOT BE ANCHORED, UNPROTECTED CHANNELS AND HIGH FLOW CHANNELS.

INSTALL EROSION CONTROL BLANKETS/MATS IN ACCORDANCE WITH MANUFACTURER'S SPECIFICATIONS AND MDT STANDARD SPECIFICATIONS SECTION 610.

INSTALL PERMANENT EROSION CONTROL GEOTEXTILE IN ACCORDANCE WITH MANUFACTURER'S SPECIFICATIONS AND MDT STANDARD SPECIFICATIONS SECTION 622.

PROVIDE EROSION CONTROL BLANKETS MEETING MDT STANDARD SPECIFICATIONS SECTION 713.12.

PROVIDE PERMANENT EROSION CONTROL GEOTEXTILE MEETING MDT STANDARD SPECIFICATIONS SECION 716.

LIMIT USE OF PLASTIC COVERS TO COVERING STOCKPILES, OR VERY SMALL GRADED AREAS FOR SHORT PERIODS OF TIME (SUCH AS THROUGH ONE IMMINENT STORM EVENT) UNTIL ALTERNATIVE MEASURES MAY BE INSTALLED. PLASTIC COVERS ARE REQUIRED TO BE POLYETHYLENE SHEETING HAVING A MINIMUM THICKNESS OF 6 mil. ANCHOR PLASTIC COVERS WITH SANDBAGS PLACED NO MORE THAN 3 m APART AND BY KEYING INTO THE TOP OF SLOPE TO PREVENT INFILTRATION OF SURFACE WATERS UNDER THE PLASTIC. TAPE OR WEIGHT DOWN THE ENTIRE LENGTH OF ALL SEAMS WITH AT LEAST A 300 mm TO 600 mm OVERLAP.

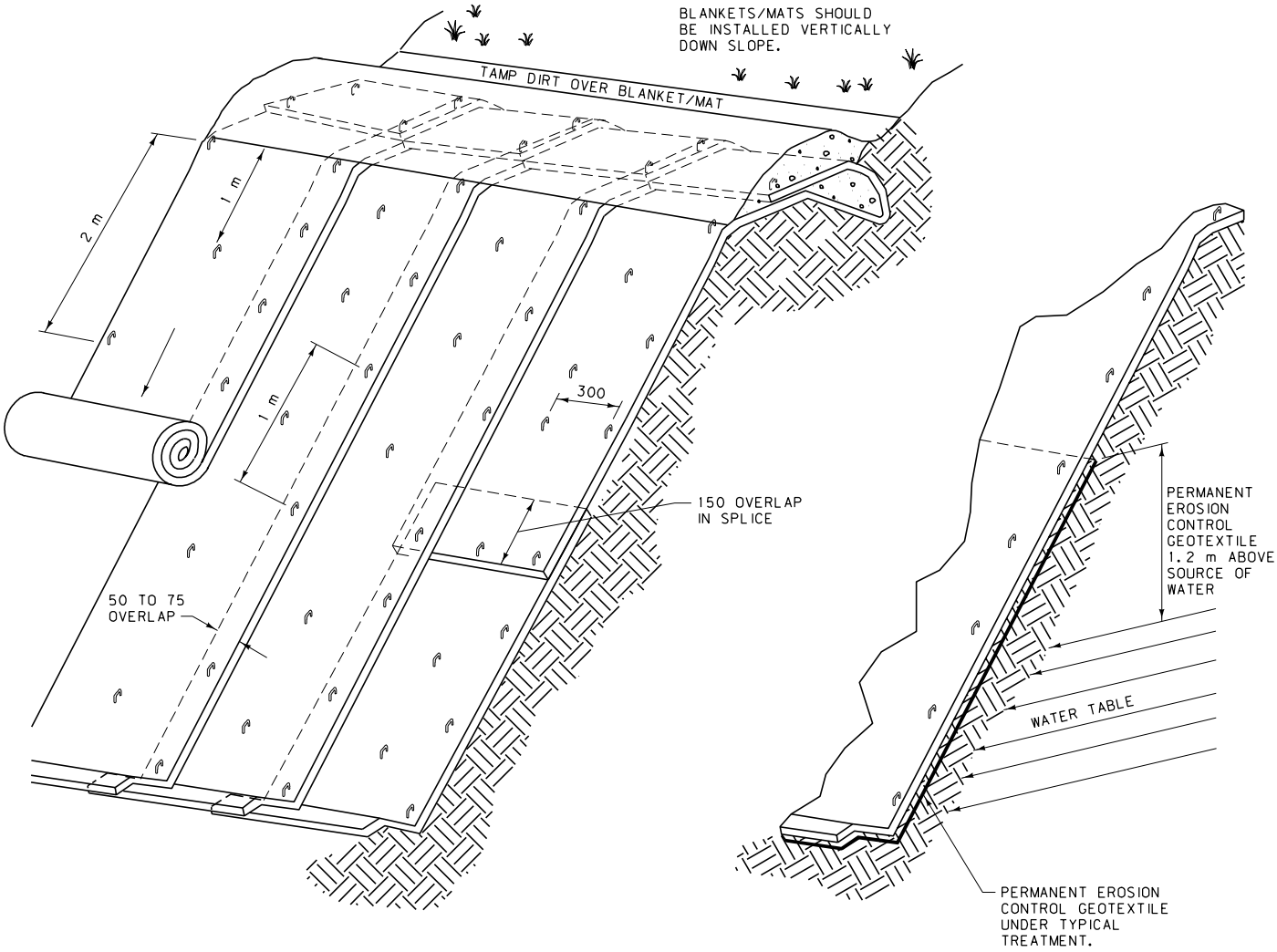

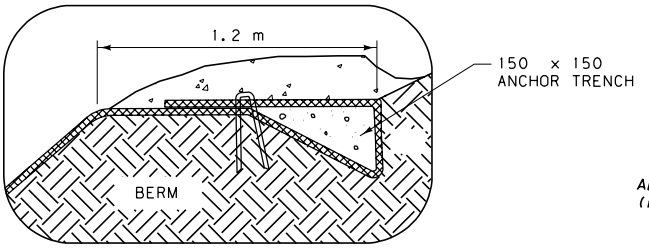

ALL DIMENSIONS ARE MILLIMETERS (mm) UNLESS OTHERWISE NOTED.

DETAILED DRAWING	
REFERENCE STANDARD SPEC. SECTION 208	DWG. NO. 208-12A
EROSION CONTROL BLANKETS/ MATS, PLASTIC COVERS & GEOTEXTILES (SS-7) (SHT 1)	
EFFECTIVE: APRIL 2006	
serving you with pride	MONTANA DEPARTMENT OF TRANSPORTATION

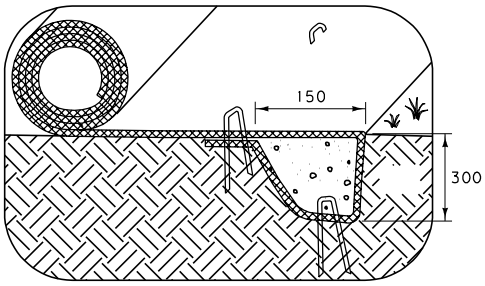

INITIAL CHANNEL ANCHOR TRENCH

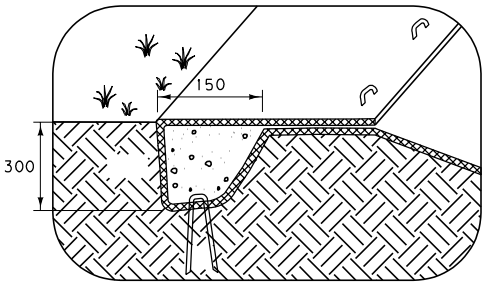

TERMINAL SLOPE & CHANNEL ANCHOR TRENCH

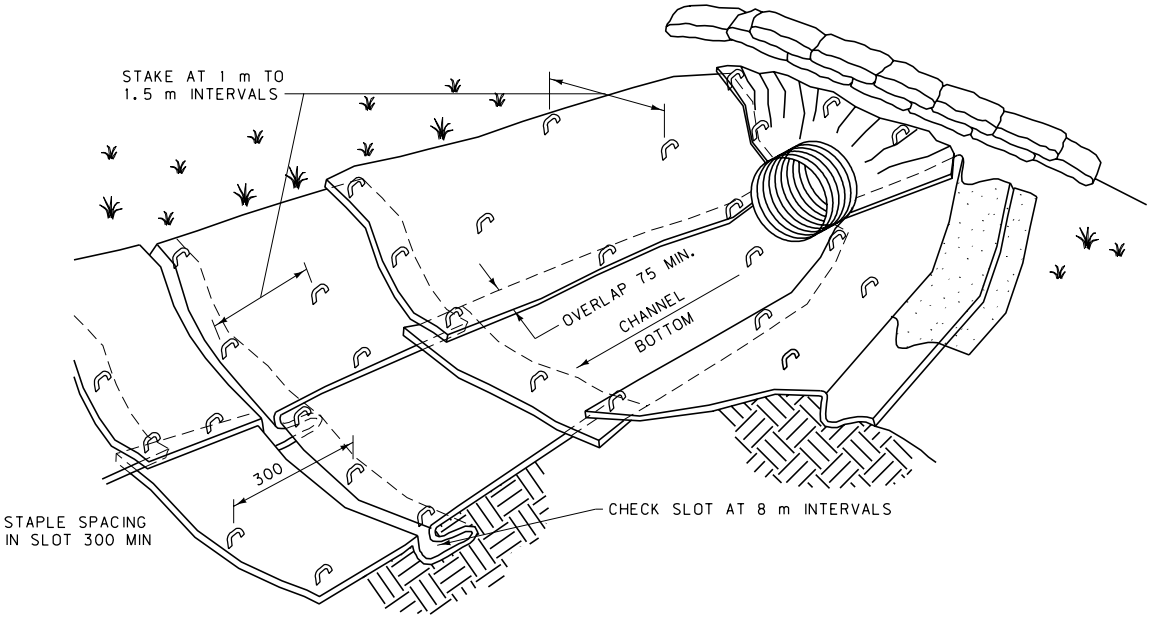

TYPICAL CHANNEL DETAIL - ISOMETRIC VIEW

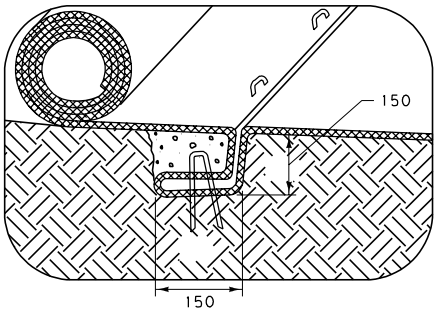

INTERMITTENT CHECK SLOT

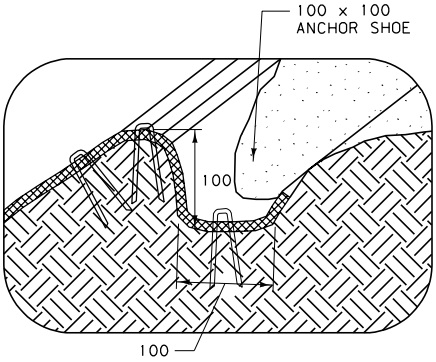

LONGITUDINAL ANCHOR TRENCH

ALL DIMENSIONS ARE MILLIMETERS (mm) UNLESS OTHERWISE NOTED.

DETAILED DRAWING	
REFERENCE STANDARD SPEC. SECTION 208	DWG. NO. 208-12B
EROSION CONT. BLANKETS/ MATS, PLASTIC COVERS & GEOTEXTILES (SS-7) (SHT 2)	
EFFECTIVE: APRIL 2006	
serving you with pride	MONTANA DEPARTMENT OF TRANSPORTATION

SYMBOL: ——— ED ———

EARTH DIKES/DRAINAGE SWALES & LINED DITCHES SS-9:

EARTH DIKES, DRAINAGE SWALES AND LINED DITCHES ARE STRUCTURES THAT INTERCEPT, DIVERT, AND CONVEY SURFACE RUN-ON, GENERALLY SHEET FLOW, TO PREVENT EROSION. THESE DEVICES MAY BE IMPLEMENTED ON A PROJECT-BY-PROJECT BASIS WITH OTHER BMPs WHEN DETERMINED NECESSARY AND FEASIBLE BY THE ENGINEER. DIKES, SWALES AND DITCHES ARE CONVEYANCE MEASURES AND ARE NOT INTENDED TO TRAP SEDIMENT. SEDIMENT CONTROL BMPs CAN BE USED IN CONJUNCTION WITH THESE CONVEYANCE DEVICES.

WHEN POSSIBLE, INSTALL AND UTILIZE DIKES, SWALES AND DITCHES EARLY IN THE CONSTRUCTION PHASE. CONSTRUCT SWALES ALONG THE TOP AND BOTTOM OF CUT AND FILL SLOPES, AS SPECIFIED IN THE PLANS OR AS DESIGNATED BY THE ENGINEER. "V" BOTTOM DITCHES CAN BE USED FOR SWALE CONSTRUCTION FOLLOWING ENGINEERS APPROVAL. USE SEDIMENT CONTROL DEVICES FOR RUNOFF THAT IS DIVERTED FROM DISTURBED AREAS. CONVEY FLOWS FROM UNDISTURBED AREAS INTO A STABILIZED AREA AT NON-EROSIVE VELOCITIES. DO NOT PLACE DIKES, SWALES, AND DITCHES IN A MANNER THAT ALLOWS HIGHWAY RUNOFF TO ENTER ONTO OTHER PROPERTY'S RIGHT-OF-WAY.

USE LINED DITCHES FOR AREAS OF HIGH FLOW VELOCITIES FOLLOWING THE GUIDELINES SPECIFIED IN SS-7 (EROSION CONTROL BLANKETS/MATS, PLASTIC COVERS & GEOTEXTILES) AND/OR SS-11 (SLOPE DRAINS). SEED ALL UNLINED PORTIONS OF DITCHES, DIKES AND SWALES THAT WILL BE IN USE FOR MORE THEN 14 DAYS IN ACCORDANCE WITH SS-15 (EROSION SEEDING)

INSPECT DIKES, SWALES, AND DITCHES AFTER RAINFALL EVENTS. REMOVE DEBRIS AND SEDIMENT, AND REPAIR LININGS AND EMBANKMENTS AS NEEDED OR AS SPECIFIED BY THE ENGINEER.

REMOVAL ALL DIKES, SWALES AND LINED DITCHES FROM THE CLEAR ZONES EXPEDIENTLY UPON COMPLETION OF CONSTRUCTION ACTIVITIES.

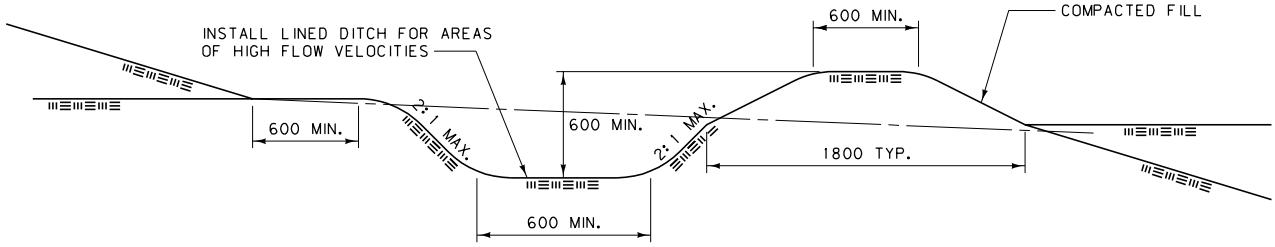

TYPICAL DRAINAGE SWALE

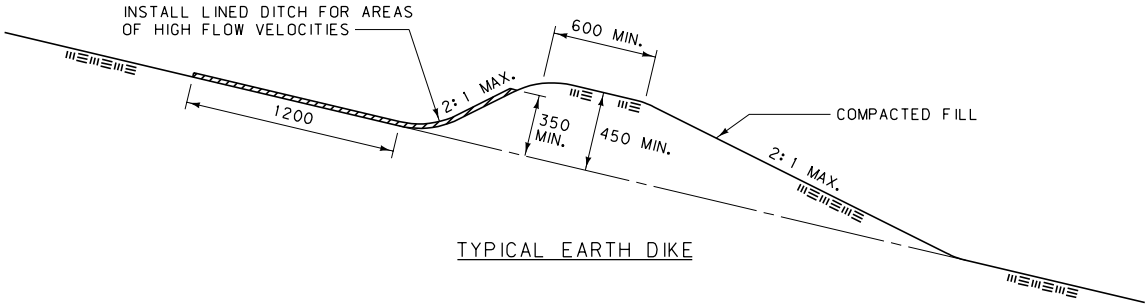

TYPICAL EARTH DIKE

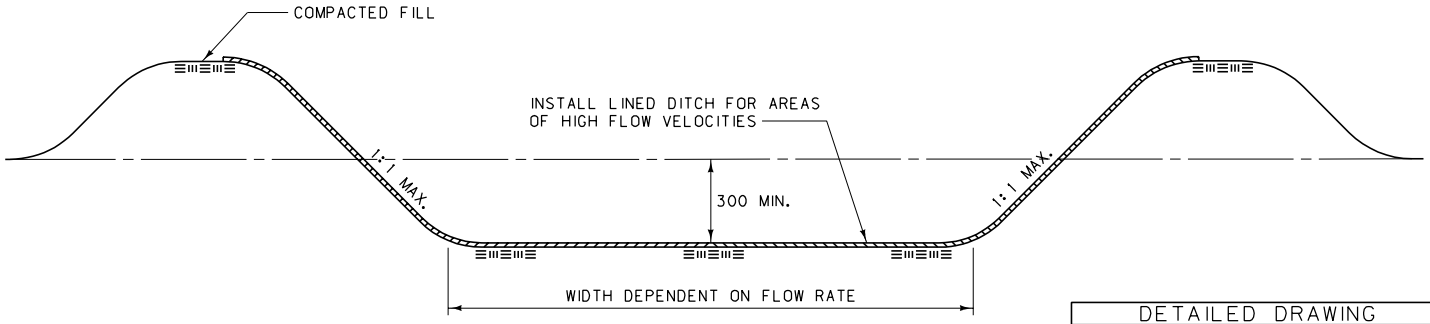

TYPICAL TRAPEZOIDAL DITCH

ALL DIMENSIONS ARE MILLIMETERS (mm) UNLESS OTHERWISE NOTED.

DETAILED DRAWING	
REFERENCE STANDARD SPEC. SECTION 208	DWG. NO. 208-16
EARTH DIKES/DRAINAGE SWALES & LINED DITCHES (SS-9)	
EFFECTIVE: APRIL 2006	
serving you with pride	MONTANA DEPARTMENT OF TRANSPORTATION

SYMBOL: (OP)

OUTLET PROTECTION/VELOCITY DISSIPATION DEVICES SS-10:

OUTLET PROTECTION AND VELOCITY DISSIPATION DEVICES ARE PLACED AT PIPE OUTLETS TO PREVENT SCOUR AND REDUCE THE VELOCITY AND/OR ENERGY OF EXITING STORM WATER FLOWS. THESE DEVICES CAN BE USED AT THE OUTLETS OF PIPES, DRAINS, CULVERTS, SLOPE DRAINS, DIVERSION DITCHES, SWALES, CONDUITS OR CHANNELS AND SHOULD BE IMPLEMENTED ON A PROJECT-BY-PROJECT BASIS WITH OTHER BMPs WHEN DETERMINED NECESSARY BY THE ENGINEER.

FOLLOW GUIDELINES BELOW FOR SIZING OUTLET PROTECTION AND VELOCITY DISSIPATION DEVICES. FOLLOWING ENGINEER'S APPROVAL, OTHER MATERIALS MAY BE SUBSTITUTED FOR RIPRAP. PERMANENT EROSION CONTROL GEOTEXTILE PLACEMENT MAY BE ELIMINATED FOLLOWING ENGINEERS APPROVAL. PLACE TYPE 1 OR TYPE 2 BANK PROTECTION AT PIPE OUTLET. FOR PIPE DIAMETERS LARGER THAN 600 mm AND/OR HIGH FLOWS, THE APPLICATION IS NOT CONSIDERED TEMPORARY AND A MONTANA REGISTERED ENGINEER'S DESIGN IS REQUIRED.

INSTALL PERMANENT EROSION CONTROL GEOTEXTILE IN ACCORDANCE WITH MANUFACTURER'S SPECIFICATIONS AND MDT STANDARD SPECIFICATIONS SECTION 622.

PROVIDE PERMANENT EROSION CONTROL GEOTEXTILE MEETING MDT STANDARD SPECIFICATIONS SECTION 716.

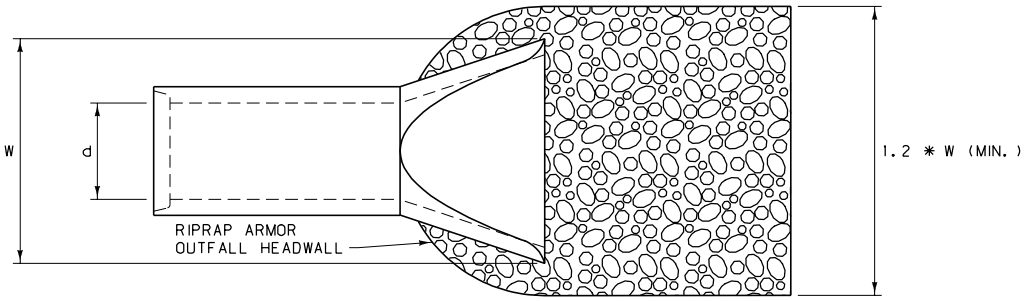

PLAN VIEW - CHANNELIZED FLOW
(OUTFALL TO CHANNEL OR DITCH)

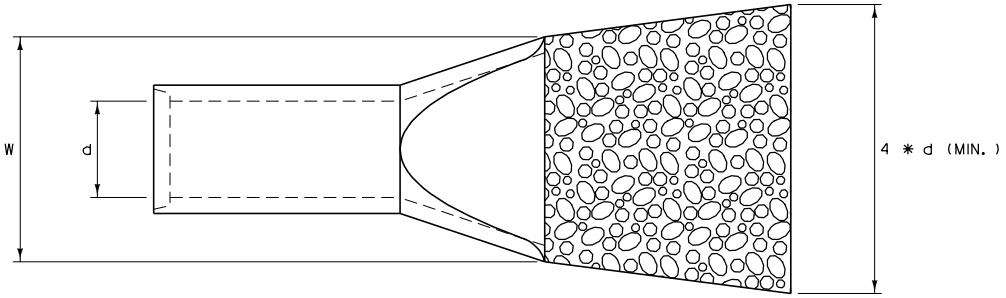

PLAN VIEW - UNCHANNELIZED FLOW
(OUTFALL TO UNCONFINED SURFACE-OVERLAND FLOW)

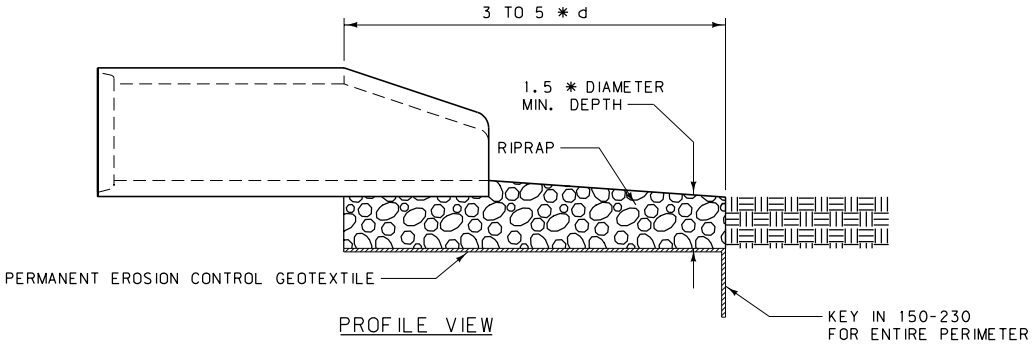

PROFILE VIEW

DETAILED DRAWING	
REFERENCE STANDARD SPEC. SECTION 208	DWG. NO. 208-18
OUTLET PROTECTION/VELOCITY DISSIPATION DEVICES (SS-10)	
EFFECTIVE: APRIL 2006	

ALL DIMENSIONS ARE MILLIMETERS (mm) UNLESS OTHERWISE NOTED.

serving you with pride — MONTANA DEPARTMENT OF TRANSPORTATION

SYMBOL: ——— SF ———

SILT FENCE SC-1:

SILT FENCE IS A SINGLE OR SERIES OF FILTER FABRIC SEDIMENT BARRIER STRETCHED AND ATTACHED TO SUPPORTING POSTS. THE FENCE BOTTOM IS ENTRENCHED.

SILT FENCES ARE USED FOR SHEET FLOWS TO ASSIST IN SEDIMENT CONTROL BY RETAINING SOME OF THE ERODED SOIL PARTICLES AND SLOWING THE RUNOFF VELOCITY TO ALLOW PARTICLE SETTLING. APPLICATIONS INCLUDE WATER RESOURCE PROTECTION, INLET PROTECTION, BANK PROTECTION, AND TOE OF SLOPE PROTECTION. INSTALL SILT FENCES PRIOR TO DISTURBING AREAS REQUIRING THIS BMP OR AS SLOPE GRADES ARE ACHIEVED. MAXIMUM CUT OR FILL SLOPE FOR A SILT FENCE IS 2:1. FOLLOW MDT STANDARD SPECIFICATION 622 FOR SILT FENCE INSTALLATION.

PROVIDE SILT FENCE MEETING MDT STANDARD SPECIFICATIONS SECTION 716.

THERE ARE TWO TYPE OF SILT FENCE INSTALLATIONS:
- UNSTABILIZED - SILT FENCE SUPPORTED WITH EITHER WOOD OR METAL FENCE POSTS.
- STABILIZED - SILT FENCE SUPPORTED WITH METAL POSTS AND WITH WOVEN WIRE BACKING.

ENTRENCHMENT - THE INITIAL SILT FENCE INSTALLATION REQUIRES ONLY THE VERTICAL ENTRENCHMENT COMPONENT UNLESS THE ENGINEER DETERMINES BOTH VERTICAL AND HORIZONTAL ENTRENCHMENT COMPONENTS ARE NECESSARY. IF THE FENCE REQUIRES REPLACEMENT DUE TO FAILURE FROM PULLOUT OR UNDERCUTTING, THE SUBSEQUENT INSTALLATION WILL INCLUDE BOTH VERTICAL AND HORIZONTAL ENTRENCHMENT COMPONENTS.

SILT FENCES ARE USED BETWEEN THE EDGE OF CONSTRUCTION DISTURBANCE AND A WATER RESOURCE, AND AT A CRITICAL RESOURCE OR RIGHT-OF-WAY LINE THAT IS ADJACENT TO CONSTRUCTION ACTIVITY. POSITION THE BARRIER TO PREVENT SEDIMENT FROM ENTERING DRAINAGES. DO NOT PLACE THE BARRIER ACROSS LIVE STREAMS. WOVEN WIRE BACKING IS NECESSARY WHEN DEALING WITH HEAVIER FLOW VELOCITIES AND SEDIMENT OR AS A ROCK BARRIER. REMOVE SEDIMENT FROM BEHIND THE FENCE WHEN IT ACCUMULATES TO ONE-THIRD THE ORIGINAL HEIGHT. EITHER GRADE AND SEED OR REMOVE THE SEDIMENT DEPOSITS PRIOR TO REMOVAL OF THE FENCE. DISTANCES BETWEEN SILT FENCE WHEN USED FOR SEDIMENT RETENTION ARE AS FOLLOWS:
- FROM 2% TO 3% PLACE SILT FENCE AT 150 METER SPACING
- FROM 3% TO 4% PLACE SILT FENCE AT 90 METER SPACING
- FROM 4% + PLACE SILT FENCE AT 45 METER SPACING

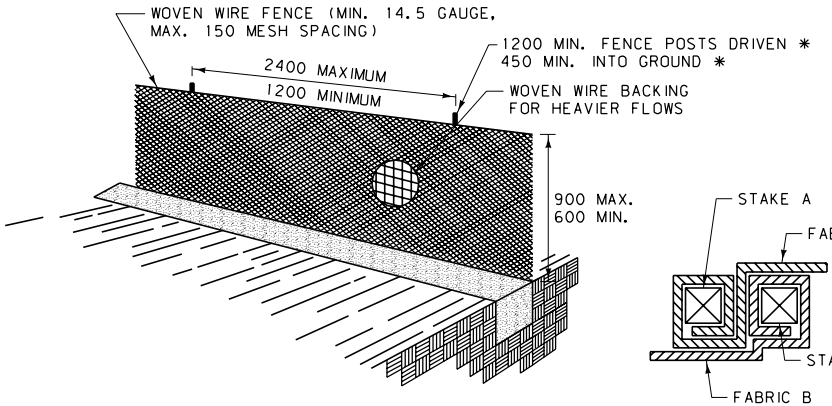

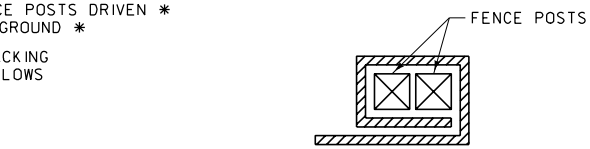

END STAKE DETAIL

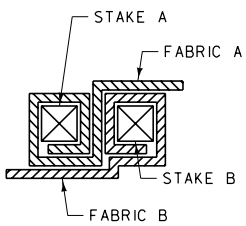

JOINING SECTION DETAIL

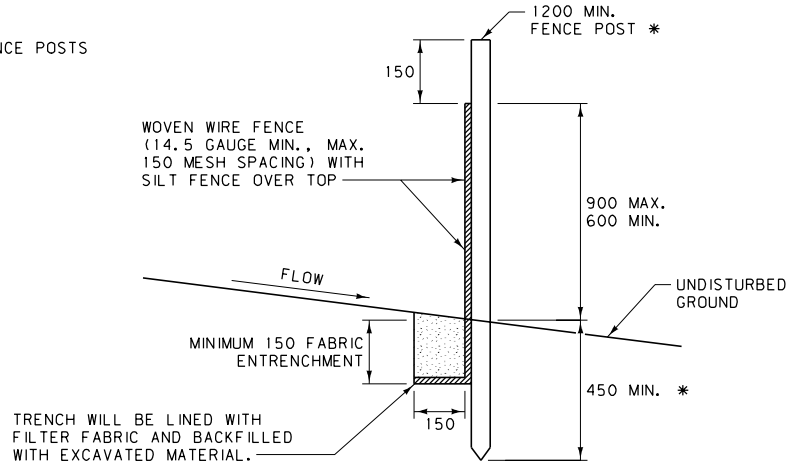

SILT FENCE - CROSS SECTION

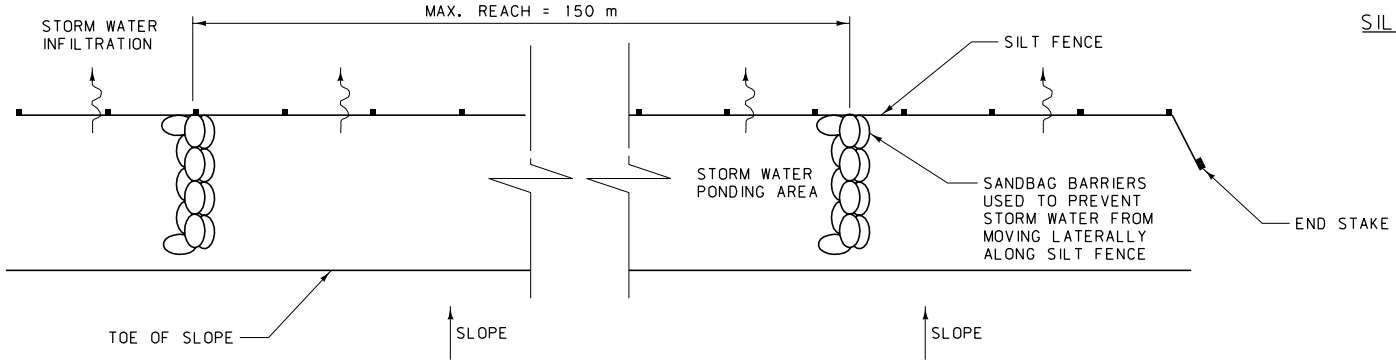

SILT FENCE - PLAN VIEW

* FOR CLEAR ZONE APPLICATIONS USE MAX. POST LENGTH OF 1500 mm WITH A MAX. BURIAL DEPTH OF 450 mm.

ALL DIMENSIONS ARE MILLIMETERS (mm) UNLESS OTHERWISE NOTED.

DETAILED DRAWING	
REFERENCE STANDARD SPEC. SECTION 208	DWG. NO. 208-30
SILT FENCE (SC-1)	
EFFECTIVE: APRIL 2006	

MDT serving you with pride — MONTANA DEPARTMENT OF TRANSPORTATION

SYMBOL: ——— DB ———

DESILTING BASIN SC-2:

A DESILTING BASIN IS A TEMPORARY BASIN FORMED BY EXCAVATION AND/OR CONSTRUCTING AN EMBANKMENT SO THAT SEDIMENT-LADEN RUNOFF IS TEMPORARILY DETAINED UNDER SLOW FLOWING CONDITIONS, ALLOWING SEDIMENT TO SETTLE OUT BEFORE THE RUNOFF IS DISCHARGED.

USE DESILTING BASINS FOR DISTURBED AREAS BETWEEN 2 ha AND 4 ha WHERE SEDIMENT-LADEN WATER MAY ENTER THE DRAINAGE SYSTEM OR WATERCOURSE.

DO NOT USE DESILTING BASINS FOR DRAINAGE AREAS GREATER THAN 30 ha AND DO NOT LOCATE BASINS WITHIN LIVE STREAMS.

SIZE DESILTING BASINS SUCH THAT THERE IS 100 m^3 PER 1 ha OF CONTRIBUTING AREA, LENGTH MUST BE EQUAL OR LARGER THAN TWICE THE WIDTH, DEPTH MUST BE BETWEEN 1 m AND 1.5 m. ANY BASIN MEETING THE DEFINITION OF A "HIGH HAZARD DAM" MUST BE DESIGNED BY A PROFESSIONAL CIVIL ENGINEER REGISTERED IN THE STATE OF MONTANA. BASINS LARGER THAN 1000 m^3 MUST ALSO BE DESIGNED BY A PROFESSIONAL CIVIL ENGINEER REGISTERED IN THE STATE OF MONTANA.

PLACE ROCK, VEGETATION, PERMANENT EROSION CONTROL GEOTEXTILE OR BLANKETS TO PROTECT THE BASIN INLET AND SLOPES AGAINST EROSION. SURROUND DESILTING BASINS WITH CHAIN LINK FENCE WHEN DESIGNED IN RESIDENTIAL/COMMERCIAL AREAS OR AS DIRECTED BY THE ENGINEER.

INSTALL PERMANENT EROSION CONTROL GEOTEXTILE IN ACCORDANCE WITH MANUFACTURER'S SPECIFICATIONS AND MDT STANDARD SPECIFICATIONS SECTION 622.

PROVIDE PERMANENT EROSION CONTROL GEOTEXTILE MEETING MDT STANDARD SPECIFICATIONS SECTION 716.

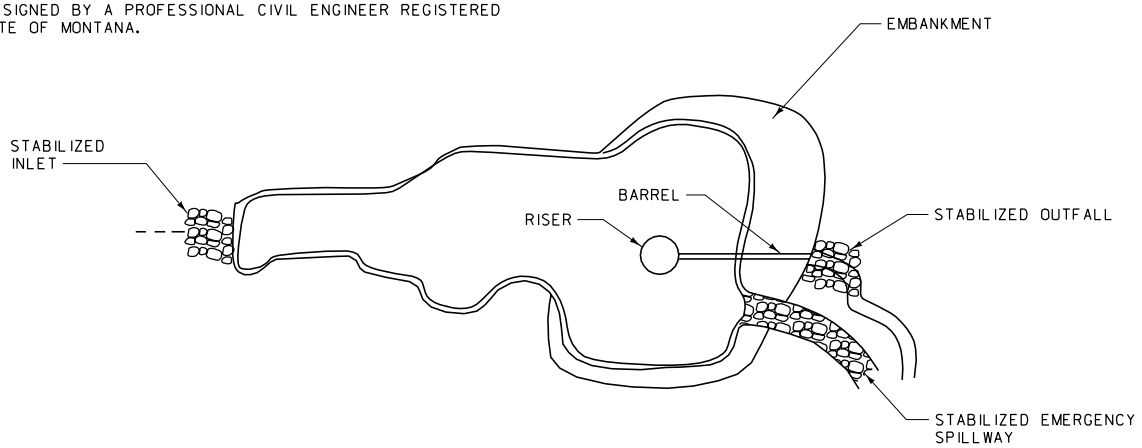

TYPICAL DESILTING BASIN - TOP VIEW

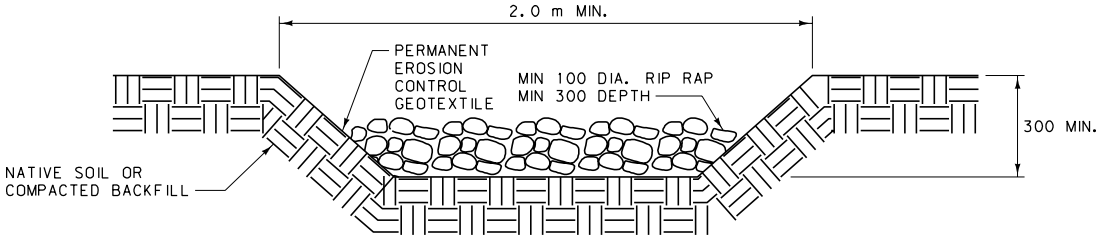

TYPICAL DESILTING BASIN - EMERGENCY SPILLWAY CROSS SECTION

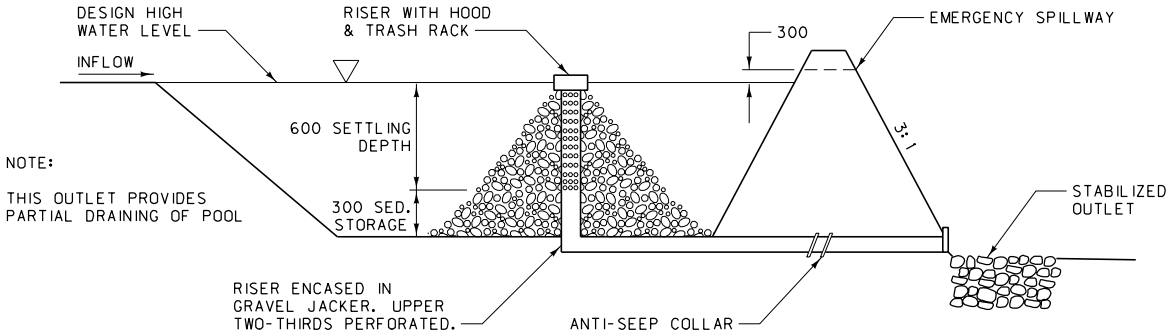

NOTE:

THIS OUTLET PROVIDES PARTIAL DRAINING OF POOL

TYPICAL DESILTING BASIN - OUTLET #1

ALL DIMENSIONS ARE MILLIMETERS (mm) UNLESS OTHERWISE NOTED.

DETAILED DRAWING	
REFERENCE STANDARD SPEC. SECTION 208	DWG. NO. 208-32A
DESILTING BASIN (SC-2) (SHEET 1)	
EFFECTIVE: APRIL 2006	
serving you with pride	MONTANA DEPARTMENT OF TRANSPORTATION

SYMBOL: ——— CD ———

CHECK DAMS SC-4:

A CHECK DAM IS A SMALL DEVICE CONSTRUCTED OF GRAVEL, SANDBAGS, OR FIBER ROLLS, PLACED ACROSS A NATURAL OR MAN-MADE CHANNEL OR DRAINAGE DITCH. CHECK DAMS REDUCE SCOUR AND CHANNEL EROSION BY REDUCING FLOW VELOCITIES AND ENCOURAGING SEDIMENT DROPOUT.

CHECK DAMS MAY BE INSTALLED IN SMALL CHANNELS WITH DRAINAGE AREAS OF 4 ha OR LESS AND/OR STEEP CHANNELS WHERE STORM WATER RUNOFF VELOCITIES EXCEED 1.5 m/s. THE MAXIMUM HEIGHT FOR CHECK DAMS WITHIN THE CLEAR ZONE IS 150 mm.

CHECK DAMS CANNOT BE USED IN LIVE STREAMS OR FOR DRAINAGE AREAS LARGER THAN 4 ha. IN ADDITION, CHECK DAMS CANNOT BE CONSTRUCTED FROM SILT FENCE.

PLACE CHECK DAMS AT A DISTANCE THAT WILL ALLOW SMALL POOLS TO BE FORMED BEHIND EACH DAM. INSTALL THE FIRST CHECK DAM APPROXIMATELY 5 METERS FROM THE OUTFALL DEVICE. PLACE MULTIPLE CHECK DAMS SUCH THAT BACKWATER FROM THE DOWNSTREAM DAM WILL REACH THE TOE OF THE UPSTREAM DAM. ROCK MAY BE PLACED BY HAND OR BY MECHANICAL METHOD TO ACHIEVE COMPLETE DITCH OR SWALE COVERAGE.

CHECK DAMS CONSTRUCTED FROM GRAVEL MUST BE 100% PASSING THE 50 mm SCREEN AND 10% MAXIMUM PASSING THE 4.75 mm SIEVE. DAM MATERIAL MAY BE PITRUN OR CRUSHED AGGREGATE. REFER TO BMPs SC-5 AND SC-8 FOR USE OF FIBER ROLLS AND SAND BAGS AS CHECK DAMS.

REMOVE SEDIMENT FROM BEHIND THE DAM WHEN IT ACCUMULATES TO ONE-HALF THE ORIGINAL HEIGHT UNLESS ITS DRAINAGE AREA HAS BEEN STABILIZED.

DISTANCES BETWEEN CHECK DAMS ARE AS FOLLOWS:
- FROM 1% TO 3% PLACE CHECK DAMS AT 90 METER SPACING
- FROM 3% TO 4% PLACE CHECK DAMS AT 60 METER SPACING
- FROM 4% + PLACE CHECK DAMS AT 30 METER SPACING

CHECK DAM SPACING MAY BE ADJUSTED ON A PROJECT-BY-PROJECT BASIS BY THE ENGINEER.
DO NOT USE CHECK DAMS ON 1-2% GRADES UNLESS DETERMINED NECESSARY BY THE ENGINEER.

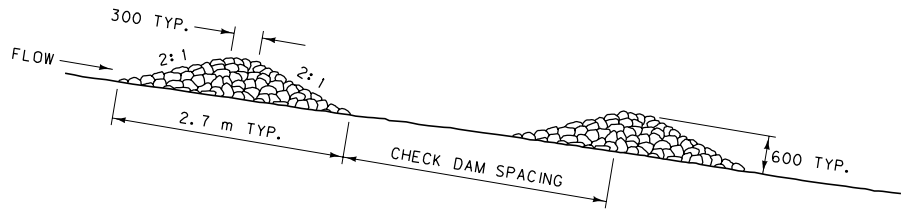

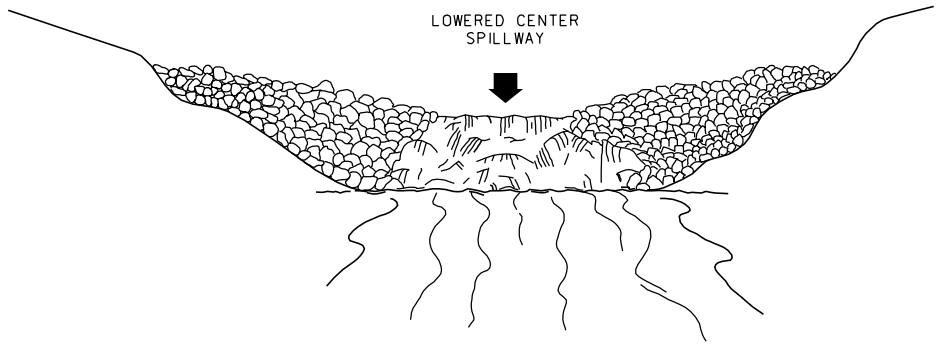

ALL DIMENSIONS ARE MILLIMETERS (mm) UNLESS OTHERWISE NOTED.

DETAILED DRAWING	
REFERENCE STANDARD SPEC. SECTION 208	DWG. NO. 208-36
CHECK DAMS (SC-4)	
EFFECTIVE: APRIL 2006	
serving you with pride	MONTANA DEPARTMENT OF TRANSPORTATION

SYMBOL: EETW

ENTRANCE/EXIT TIRE WASH TC-3:

A TIRE WASH IS AN AREA LOCATED AT A STABILIZED CONSTRUCTION ACCESS POINT WHERE PRESSURIZED WATER IS USED TO REMOVE SEDIMENT FROM TIRES AND UNDERCARRIAGE, AND TO PREVENT SEDIMENT FROM BEING TRANSPORTED ONTO PUBLIC ROADWAYS.

TIRE WASHES ARE MEANT TO BE USED ON A PROJECT-BY-PROJECT BASIS AND REQUIRES APPROVAL BY THE ENGINEER. THESE DEVICES REQUIRE A SUPPLY OF WASH WATER AND MAY REQUIRE A TURNOUT OR DOUBLE WIDE ACCESS.

FOLLOW BMP TC-1 FOR STABILIZED CONSTRUCTION ENTRANCES/EXITS. PROVIDE WASH RACK SUITABLE FOR SUPPORTING TRAFFIC LOADS. DIRECT WASH WATER FROM THE RACK, THROUGH A DRAINAGE DITCH, TO A SEDIMENT TRAP DEVICE. ENGINEERS APPROVAL IS REQUIRED PRIOR TO CONSTRUCTION.

TIRE WASH DEVICES OTHER THAN THOSE SHOWN MAY BE USED AS APPROVED BY THE ENGINEER.

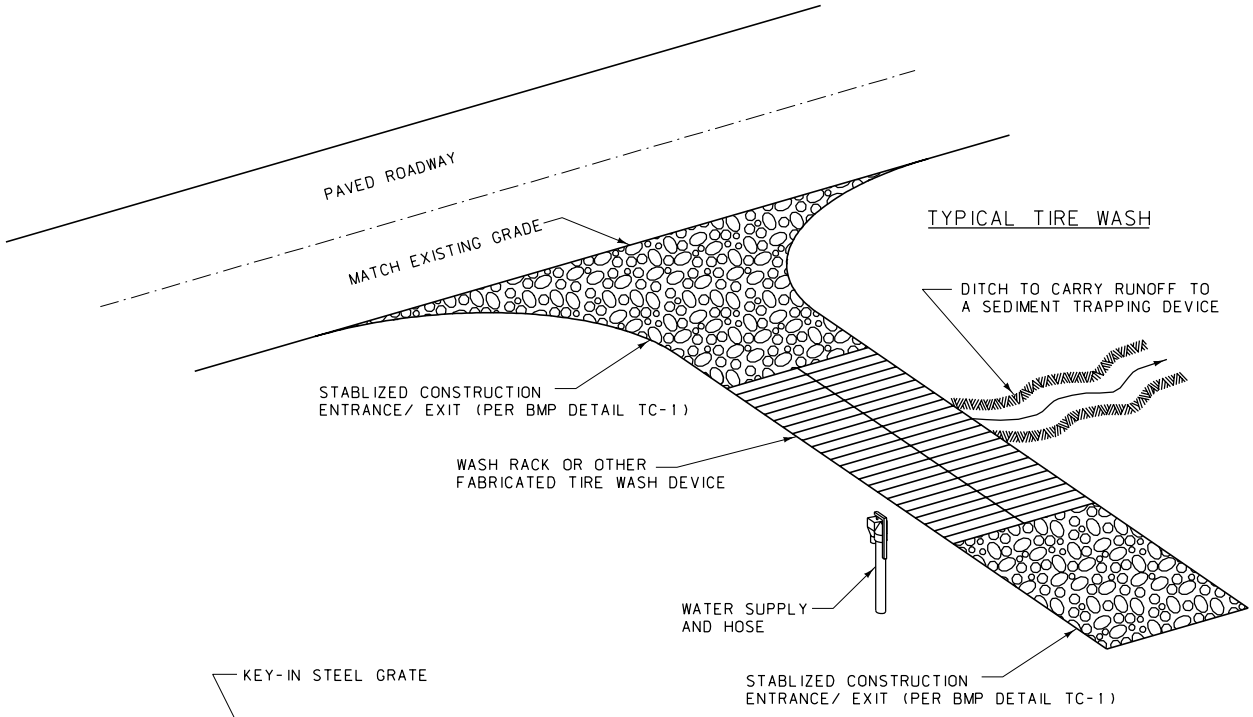

TYPICAL TIRE WASH

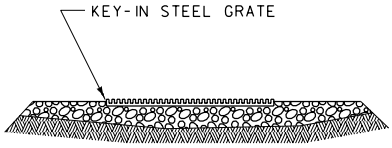

STEEL GRATE WASH RACK

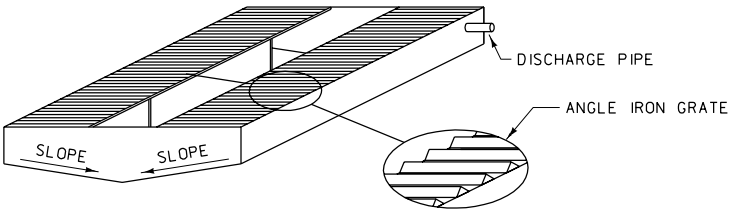

SELF-CONTAINED STEEL TIRE WASH

ALL DIMENSIONS ARE MILLIMETERS (mm) UNLESS OTHERWISE NOTED.

DETAILED DRAWING	
REFERENCE STANDARD SPEC. SECTION 208	DWG. NO. 208-58
ENTRANCE/EXIT TIRE WASH (TC-3)	
EFFECTIVE: APRIL 2006	
serving you with pride	MONTANA DEPARTMENT OF TRANSPORTATION

TEMPORARY STREAM CROSSINGS NS-4:

A TEMPORARY STREAM CROSSING IS A STRUCTURE PLACED ACROSS A WATERWAY THAT ALLOWS VEHICLES AND/OR HEAVY EQUIPMENT TO CROSS THE WATERWAY DURING CONSTRUCTION. THE STREAM CROSSINGS PROTECT THE STREAM BANKS AND CHANNELS FROM DAMAGE CAUSED BY VEHICLE MOVEMENT WHICH RELEASES SEDIMENT.

TEMPORARY STREAM CROSSINGS CAN CONSIST OF BRIDGES, CULVERTS OR FORDS. FOLLOW STREAM CROSSING GUIDELINES PROVIDED IN THE MDT/FWP TASK FORCE RECOMMENDATIONS REPORT. TEMPORARY STREAM CROSSINGS REQUIRE THE ACQUISITION OF SPECIAL PERMITS.

INSTALL PERMANENT EROSION CONTROL GEOTEXTILE IN ACCORDANCE WITH MANUFACTURER'S SPECIFICATIONS AND MDT STANDARD SPECIFICATIONS SECTION 622.

PROVIDE PERMANENT EROSION CONTROL GEOTEXTILE MEETING MDT STANDARD SPECIFICATIONS SECTION 716.

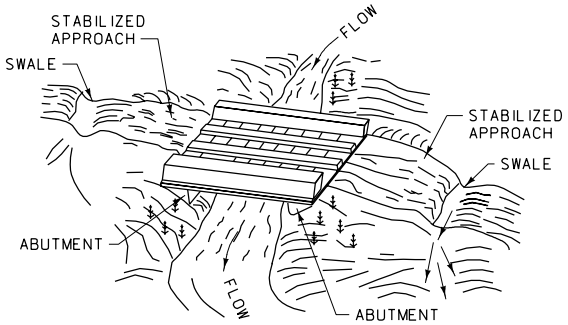

NOTE:

SURFACE FLOW OF ROAD DIVERTED BY SWALE AND/OR DIKE

TYPICAL BRIDGE CROSSING

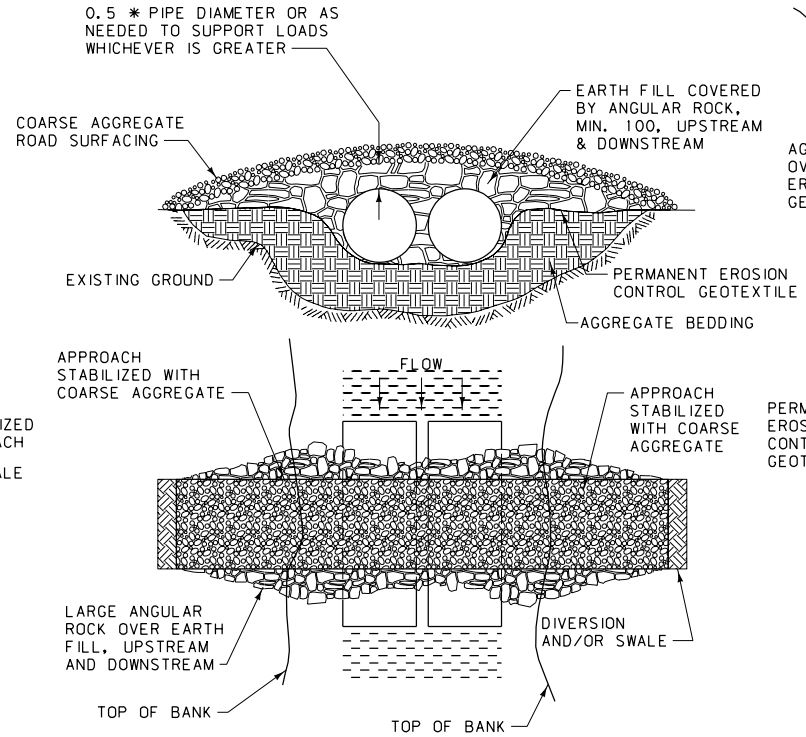

TYPICAL CULVERT CROSSING

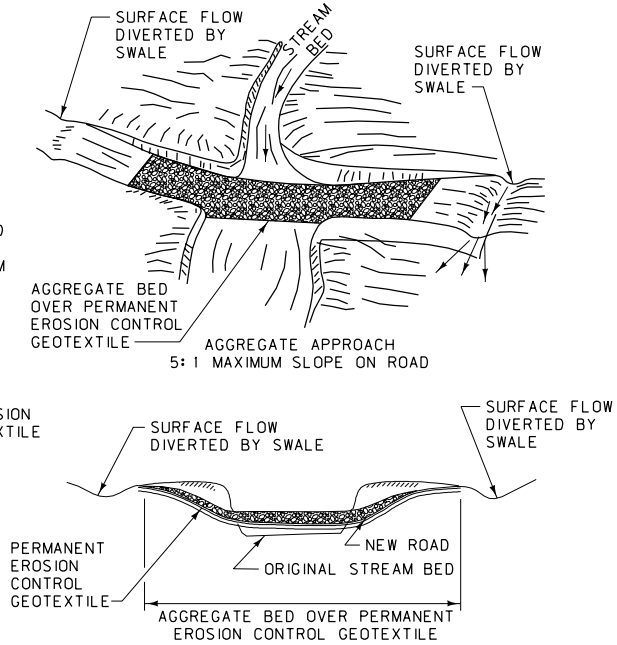

TYPICAL FORD CROSSING

ALL DIMENSIONS ARE MILLIMETERS (mm) UNLESS OTHERWISE NOTED.

DETAILED DRAWING	
REFERENCE STANDARD SPEC. SECTION 208	DWG. NO. 208-60
TEMPORARY STREAM CROSSINGS (NS-4)	
EFFECTIVE: APRIL 2006	

MDT serving you with pride — MONTANA DEPARTMENT OF TRANSPORTATION

DIAMETER OR SPAN x RISE (mm)	CUBIC METERS OF CLASS DD CONCRETE (EACH END)								CUBIC METERS OF RIPRAP (EACH END) ① (DTL. DWG. NO. 613-14)						m³ BEDDING MATERIAL ② PER METER OF PIPE (DTL. DWG. NO. 603-19)	
	CUTOFF WALL (DTL. DWG. NO. 552-00)		CONCRETE EDGE PROTECTION (DTL. DWG. NO. 613-08)													
			1.5:1		2:1		2.5:1		1.5:1		2:1		2.5:1			
	SING.	DBL.	SING.	DBL.	SING.	DBL.	SING.	DBL.	SING.	DBL.	SING.	DBL.	SING.	DBL.	SING.	DBL.
RCP (SQ. END)																
1350	1.0	1.7	1.7	2.5	2.0	3.0	~	~	6.7	10.8	8.3	13.4	~	~	2.57	5.14
1500	1.1	1.8	1.8	2.7	2.2	3.3	~	~	7.2	11.7	9.0	14.5	~	~	2.80	5.60
1650	1.2	2.0	2.0	3.0	2.4	3.6	~	~	7.7	12.6	9.8	15.9	~	~	3.03	6.06
1800	1.2	2.1	2.2	3.2	2.6	3.9	~	~	8.4	13.7	10.4	17.0	~	~	3.27	6.54
1950	1.3	2.2	2.3	3.5	2.8	4.2	~	~	9.0	14.6	11.1	18.1	~	~	3.52	7.04
2100	1.4	2.4	2.5	3.7	3.0	4.5	~	~	9.5	15.6	11.8	19.3	~	~	3.78	7.56
2250	1.4	2.5	2.6	4.0	3.2	4.8	~	~	10.1	16.5	12.5	20.5	~	~	4.04	8.08
2400	1.5	2.6	2.8	4.2	3.4	5.1	~	~	10.6	17.5	13.2	21.7	~	~	4.31	8.62
RCPA (SQ. END)																
1650 x 1015	0.9	1.5	1.6	2.5	1.9	2.9	~	~	6.7	11.0	8.3	13.6	~	~	2.60	5.20
1855 x 1145	1.0	1.6	1.8	2.7	2.1	3.3	~	~	7.3	12.0	9.0	15.0	~	~	2.84	5.68
2235 x 1370	1.1	1.8	2.1	3.3	2.6	3.9	~	~	8.6	14.5	10.7	17.9	~	~	3.27	6.54
2590 x 1575	1.1	2.0	2.5	3.8	3.0	4.6	~	~	9.8	16.6	12.2	20.5	~	~	3.66	7.32
2920 x 1830	1.3	2.2	2.7	4.3	3.3	5.2	~	~	10.8	18.3	13.3	22.7	~	~	4.15	8.30
3100 x 1960	1.3	2.2	2.9	4.6	3.6	5.6	~	~	11.5	19.6	14.3	24.4	~	~	4.33	8.66
3505 x 2215	1.4	2.4	3.4	5.3	4.1	6.4	~	~	13.1	22.4	16.2	27.8	~	~	4.81	9.62
3910 x 2460	1.5	2.6	3.8	6.1	4.6	7.4	~	~	14.7	25.3	18.2	31.4	~	~	5.31	10.62
4285 x 2705	1.6	2.8	4.0	6.4	4.9	7.8	~	~	15.4	26.7	19.1	33.1	~	~	5.73	11.46

DIAMETER OR SPAN x RISE (mm)	CUBIC METERS OF CLASS DD CONCRETE (EACH END)							CUBIC METERS OF RIPRAP (EACH END) ① (DTL. DWG. NO. 613-14)				SLOPE	m³ BEDDING MATERIAL ② PER LIN. m OF PIPE (DTL. DWG. NO. 603-19)	
	CUTOFF WALL (DTL. DWG. NO. 552-00)		CONCRETE EDGE PROTECTION (DTL. DWG. NO. 613-08)											
	SING.	DBL.		SING.	DBL.				SING.	DBL.			SING.	DBL.
RCP (FETS)														
1350	1.3	2.2		2.0	3.1				9.3	15.7			2.0:1	2.57	5.14
1500	1.4	2.4		1.9	2.9				8.8	14.9			1.9:1	2.80	5.60
1650	1.4	2.3		2.2	3.4				9.8	16.7			1.7:1	3.03	6.06
1800	1.5	2.5		2.3	3.7				10.5	17.9			1.9:1	3.27	6.54
1950	1.5	2.6		2.6	4.1				11.6	19.8			1.8:1	3.52	7.04
2100	1.6	2.7		2.7	4.2				11.7	20.1			1.5:1	3.78	7.56
2250	1.7	2.9		2.8	4.5				12.3	21.3			1.5:1	4.04	8.08
RCPA (FETS)															
1650 x 1015	1.3	2.2		2.2	3.4				11.3	19.2			3.0:1	2.60	5.20
1855 x 1145	1.4	2.3		2.3	3.6				11.9	20.4			3.0:1	2.84	5.68
2235 x 1370	1.5	2.6		2.1	3.4				10.4	18.0			2.0:1	3.27	6.54
2590 x 1575	1.6	2.8		3.1	4.9				14.1	24.4			2.0:1	2.98	5.97

NOTES:

① QUANTITIES ARE BASED ON A THICKNESS OF 600 mm AND ARE PROPORTIONED WHEN A DIFFERENT THICKNESS IS SPECIFIED.

② QUANTITIES ARE BASED ON BEDDING DETAILS SHOWN ON DTL. DWG. NO. 603-19 WITH A WIDTH EQUAL TO (DIAMETER OR SPAN) + 1200 mm + (2 TIMES SHELL THICKNESS FOR CONCRETE OR 2 TIMES CORRUGATION WIDTH FOR METAL) AND A DEPTH EQUAL TO 600 mm + "X" + (SHELL THICKNESS FOR CONCRETE OR CORRUGATION WIDTH FOR METAL). TO COMPUTE THE TOTAL BEDDING QUANTITY MULTIPLY BY (LENGTH OF PIPE MINUS 7.0 m).

③ SEE DTL. DWG. NO. 603-08 AND 603-10 FOR "X" DIMENSIONS OF CONCRETE PIPES.

ALL DIMENSIONS ARE MILLIMETERS (mm) UNLESS OTHERWISE NOTED.

DETAILED DRAWING

REFERENCE STANDARD SPEC. SECTION 552, 603, 613

DWG. NO. 552-04

CONCRETE, RIPRAP AND BEDDING MATERIAL QUANTITIES FOR SING. AND DBL. CULVERT INSTALLATION

EFFECTIVE: APRIL 2006

serving you with pride

MONTANA DEPARTMENT OF TRANSPORTATION

DIAMETER OR SPAN x RISE (m)	CUBIC METERS OF CLASS DD CONCRETE (EACH END) ④								CUBIC METERS OF RIPRAP (EACH END) ① ④ (DTL. DWG. NO. 613-14)						m³ BEDDING MATERIAL ② PER METER OF PIPE (DTL. DWG. NO. 603-19)	
	CUTOFF WALL (DTL. DWG. NO. 552-00)		CONCRETE EDGE PROTECTION (DTL. DWG. NO. 613-06)													
			1.5:1		2:1		2.5:1		1.5:1		2:1		2.5:1			
	SING.	DBL.	SING.	DBL.	SING.	DBL.	SING.	DBL.	SING.	DBL.	SING.	DBL.	SING.	DBL.	SING.	DBL.
SSPPA 152 mm x 51 mm CORRUGATIONS 457 mm CORNER RADIUS																
1.850 x 1.400	1.0	1.7	1.5	2.2	1.8	2.6	2.1	3.1	6.1	10.0	7.6	12.5	9.2	15.0	2.64	5.28
1.930 x 1.450	1.0	1.8	1.5	2.3	1.8	2.8	2.2	3.3	6.4	10.5	8.0	13.0	9.6	15.7	2.66	5.32
2.060 x 1.500	1.1	1.9	1.6	2.4	1.9	2.9	2.2	3.4	6.6	10.8	8.3	13.6	10.0	16.4	2.83	5.66
2.130 x 1.550	1.1	1.9	1.7	2.5	2.0	3.0	2.4	3.5	6.8	11.2	8.5	14.0	10.4	17.1	2.84	5.68
2.210 x 1.600	1.1	1.9	1.7	2.6	2.1	3.1	2.5	3.7	7.1	11.7	8.8	14.5	10.7	17.5	2.85	5.70
2.340 x 1.650	1.2	2.0	1.8	2.7	2.1	3.2	2.5	3.8	7.4	12.2	9.2	15.2	11.1	18.3	3.03	6.06
2.410 x 1.700	1.2	2.0	1.9	2.8	2.2	3.4	2.6	4.0	7.6	12.5	9.5	15.8	11.5	19.0	3.03	6.06
2.490 x 1.750	1.2	2.0	1.9	2.9	2.3	3.5	2.8	4.2	7.8	12.9	9.7	16.1	11.8	19.4	3.02	6.04
2.620 x 1.800	1.2	2.1	2.0	3.0	2.4	3.6	2.8	4.3	8.1	13.5	10.1	16.7	12.2	20.2	3.22	6.44
2.690 x 1.850	1.2	2.1	2.1	3.1	2.5	3.8	2.9	4.4	8.3	13.7	10.4	17.3	12.6	20.9	3.21	6.42
2.840 x 1.910	1.3	2.2	2.1	3.2	2.5	3.9	3.0	4.6	8.6	14.3	10.6	17.8	12.8	21.4	3.43	6.86
2.900 x 1.960	1.3	2.2	2.2	3.3	2.6	4.0	3.1	4.7	8.9	14.8	11.0	18.4	13.3	22.1	3.41	6.82
2.970 x 2.010	1.3	2.2	2.3	3.5	2.7	4.2	3.2	4.9	9.1	15.1	11.4	19.0	13.7	22.9	3.37	6.74
3.120 x 2.060	1.3	2.3	2.3	3.5	2.8	4.3	3.3	5.0	9.3	15.7	11.6	19.4	14.0	23.4	3.62	7.24
3.250 x 2.110	1.4	2.4	2.3	3.6	2.8	4.4	3.3	5.2	9.5	16.0	11.8	19.8	14.2	23.9	3.85	7.70
3.330 x 2.160	1.4	2.4	2.4	3.8	2.9	4.5	3.5	5.4	9.8	16.5	12.2	20.5	14.7	24.7	3.83	7.66
3.480 x 2.210	1.5	2.6	2.5	3.8	3.0	4.6	3.5	5.5	10.0	16.8	12.4	20.9	14.9	25.2	4.08	8.16
3.530 x 2.260	1.5	2.5	2.6	4.0	3.1	4.8	3.7	5.7	10.3	17.4	12.8	21.6	15.4	26.0	4.05	8.10
3.610 x 2.310	1.4	2.5	2.7	4.1	3.2	5.0	3.8	5.9	10.6	17.9	13.2	22.2	15.9	26.8	4.01	8.02
3.760 x 2.360	1.5	2.7	2.7	4.2	3.3	5.1	3.9	6.0	10.8	18.3	13.4	22.7	16.1	27.3	4.27	8.54
3.810 x 2.410	1.5	2.6	2.8	4.3	3.4	5.2	4.0	6.2	11.1	18.8	13.8	23.4	16.6	28.1	4.24	8.48
3.860 x 2.460	1.5	2.6	2.9	4.5	3.5	5.4	4.1	6.4	11.4	19.4	14.2	24.0	17.1	28.9	4.18	8.36
3.910 x 2.540	1.5	2.6	3.0	4.6	3.6	5.6	4.3	6.6	11.8	19.9	14.6	24.7	17.6	29.7	4.12	8.24
4.090 x 2.570	1.6	2.8	3.0	4.7	3.6	5.7	4.3	6.7	12.0	20.3	14.8	25.2	17.9	30.3	4.41	8.82
SSPPA 152 mm x 51 mm CORRUGATIONS 787 mm CORNER RADIUS																
4.040 x 2.840	1.8	3.2	2.8	4.4	3.4	5.3	4.0	6.3	11.2	19.0	13.9	23.6	16.7	28.5	5.23	10.46
4.110 x 2.900	1.8	3.2	2.9	4.5	3.5	5.5	4.1	6.5	11.4	19.5	14.2	24.2	17.1	29.2	5.19	10.38
4.270 x 2.950	1.9	3.3	2.9	4.7	3.5	5.6	4.2	6.6	11.7	19.9	14.5	24.8	17.5	29.9	5.46	10.92
4.320 x 3.000	1.9	3.3	3.1	4.8	3.7	5.8	4.4	6.9	12.1	20.7	15.0	25.7	18.1	31.0	5.39	10.78
4.390 x 3.050	1.9	3.3	3.2	5.0	3.8	6.0	4.5	7.1	12.4	21.2	15.4	26.3	18.6	31.8	5.34	10.68
4.550 x 3.100	2.0	3.4	3.2	5.0	3.8	6.1	4.6	7.2	12.5	21.5	15.6	26.7	18.8	32.2	5.66	11.32
4.670 x 3.150	2.1	3.6	3.2	5.1	3.9	6.1	4.6	7.3	12.6	21.7	15.7	27.0	18.9	32.6	5.98	11.96
4.750 x 3.200	2.0	3.6	3.3	5.3	4.0	6.4	4.8	7.6	13.1	22.5	16.3	27.9	19.6	33.7	5.90	11.80
4.830 x 3.250	2.0	3.5	3.5	5.5	4.2	6.6	5.0	7.8	13.5	23.2	16.8	28.8	20.3	34.7	5.82	11.64
4.950 x 3.300	2.1	3.7	3.4	5.5	4.2	6.6	4.9	7.9	13.6	23.4	16.8	29.0	20.3	35.0	6.19	12.38
5.030 x 3.350	2.1	3.7	3.6	5.7	4.3	6.9	5.1	8.2	14.0	24.1	17.4	29.9	21.0	36.1	6.10	12.20
5.180 x 3.400	2.2	3.8	3.6	5.8	4.3	6.9	5.1	8.2	14.1	24.4	17.5	30.3	21.1	36.5	6.45	12.90
5.230 x 3.450	2.2	3.8	3.7	5.9	4.5	7.1	5.3	8.5	14.5	25.0	18.0	31.0	21.7	37.4	6.40	12.80
5.310 x 3.510	2.1	3.8	3.8	6.1	4.6	7.4	5.5	8.8	14.9	25.7	18.5	32.0	22.3	38.5	6.30	12.60
5.460 x 3.560	2.2	3.9	3.9	6.2	4.7	7.5	5.6	8.9	15.1	26.2	18.8	32.5	22.6	39.2	6.62	13.24
5.510 x 3.610	2.2	3.9	4.0	6.4	4.8	7.7	5.7	9.1	15.5	26.8	19.2	33.3	23.2	40.2	6.55	13.10
5.660 x 3.660	2.3	4.1	4.0	6.5	4.8	7.8	5.7	9.2	15.6	27.1	19.4	33.7	23.4	40.6	6.92	13.84
5.720 x 3.710	2.3	4.1	4.1	6.6	5.0	8.0	5.9	9.5	16.1	27.9	19.9	34.6	24.0	41.7	6.82	13.64
5.870 x 3.760	2.4	4.2	4.2	6.7	5.0	8.1	6.0	9.6	16.2	28.2	20.1	35.0	24.3	42.2	7.19	14.38
5.940 x 3.810	2.4	4.2	4.3	6.9	5.2	8.4	6.2	9.9	16.7	29.0	20.7	36.0	25.0	43.4	7.09	14.18
5.990 x 3.860	2.3	4.2	4.4	7.1	5.3	8.6	6.3	10.2	17.0	29.6	21.2	36.8	25.5	44.3	7.02	14.04
6.070 x 3.910	2.3	4.1	4.5	7.3	5.5	8.8	6.5	10.5	17.5	30.3	21.7	37.6	26.2	45.4	6.90	13.80
6.220 x 3.960	2.4	4.3	4.6	7.4	5.5	8.9	6.6	10.6	17.6	30.7	21.9	38.2	26.4	46.0	7.29	14.58
6.270 x 4.010	2.4	4.3	4.7	7.5	5.7	9.1	6.7	10.8	18.0	31.3	22.4	38.9	27.0	46.9	7.20	14.40

NOTES:

① QUANTITIES ARE BASED ON A THICKNESS OF 600 mm AND ARE PROPORTIONED WHEN A DIFFERENT THICKNESS IS SPECIFIED.

② QUANTITIES ARE BASED ON BEDDING DETAILS SHOWN ON DTL. DWG. NO. 603-19 WITH A WIDTH EQUAL TO (DIAMETER OR SPAN) + 1200 mm + (2 TIMES SHELL THICKNESS FOR CONCRETE OR 2 TIMES CORRUGATION WIDTH FOR METAL) AND A DEPTH EQUAL TO 600 mm + "X" + (SHELL THICKNESS FOR CONCRETE OR CORRUGATION WIDTH FOR METAL). TO COMPUTE THE TOTAL BEDDING QUANTITY MULTIPLY BY (LENGTH OF PIPE MINUS 7.0 m).

③ SEE DTL. DWG. NO 603-32 AND 603-34 FOR "X" DIMENSIONS OF METAL PIPES.

④ FOR PIPES WITH SKEW BEVEL ENDS - DIVIDE THE QUANTITIES SHOWN BY COSINE OF SKEW ANGLE.

ALL DIMENSIONS ARE MILLIMETERS (mm) UNLESS OTHERWISE NOTED.

DETAILED DRAWING

REFERENCE
STANDARD SPEC.
SECTION 552, 603, 613

DWG. NO.
552-06

CONCRETE, RIPRAP AND BEDDING MATERIAL QUANTIES FOR SING. AND DBL. CULVERT INSTALLATION

EFFECTIVE: APRIL 2006

serving you with pride

MONTANA DEPARTMENT OF TRANSPORTATION

DIAMETER OR SPAN x RISE (mm OR m)	CUBIC METERS OF CLASS DD CONCRETE (EACH END) ④								CUBIC METERS OF RIPRAP (EACH END) ① ④ (DTL. DWG. NO. 613-14)						m³ BEDDING MATERIAL ② PER METER OF PIPE (DTL. DWG. NO. 603-19)	
	CUTOFF WALL (DTL. DWG. NO. 552-00)		CONCRETE EDGE PROTECTION (DTL. DWG. NO. 613-06)													
			1.5:1		2:1		2.5:1		1.5:1		2:1		2.5:1			
	SING.	DBL.	SING.	DBL.	SING.	DBL.	SING.	DBL.	SING.	DBL.	SING.	DBL.	SING.	DBL.	SING.	DBL.
CSP 75 mm x 25 mm OR 125 mm x 25 mm CORRUGATIONS																
1350	0.9	1.4	1.5	2.2	1.8	2.6	2.2	3.3	6.1	9.7	7.5	12.0	9.6	15.3	2.09	4.18
1500	0.9	1.5	1.6	2.4	2.0	2.9	2.4	3.6	6.5	10.4	8.1	13.0	10.3	16.5	2.27	4.54
1650	1.0	1.6	1.8	2.6	2.1	3.1	2.6	3.9	7.0	11.2	8.7	13.9	11.0	17.7	2.45	4.90
1800	1.0	1.7	1.9	2.8	2.3	3.4	2.9	4.2	7.4	12.0	9.2	14.9	11.7	18.8	2.63	5.26
1950	1.1	1.8	2.0	3.0	2.5	3.6	3.1	4.5	7.9	12.8	9.8	15.8	12.4	20.0	2.82	5.64
2100	1.1	1.9	2.2	3.2	2.6	3.9	3.3	4.8	8.4	13.6	10.4	16.8	13.1	21.2	3.01	6.02
2250	1.2	2.0	2.3	3.5	2.8	4.2	3.5	5.2	8.8	14.4	11.1	18.2	13.8	22.4	3.20	6.40
2400	1.3	2.2	2.5	3.7	3.0	4.4	3.7	5.5	9.5	15.5	11.7	19.2	14.5	23.6	3.40	6.80
2550	1.3	2.3	2.6	3.9	3.2	4.7	3.9	5.8	9.9	16.3	12.3	20.2	15.2	24.9	3.61	7.22
2700	1.4	2.4	2.7	4.1	3.3	5.0	4.1	6.2	10.4	17.1	12.9	21.2	16.0	26.2	3.82	7.64
2850	1.4	2.5	2.9	4.3	3.5	5.2	4.4	6.5	10.9	18.0	13.6	22.3	16.8	27.5	4.03	8.06
3000	1.5	2.6	3.0	4.6	3.7	5.5	4.6	6.9	11.4	18.8	14.2	23.3	17.5	28.8	4.25	8.50
SSPP 152 mm x 51 mm CORRUGATIONS																
3.205	1.6	2.7	3.3	4.9	4.0	6.0	4.8	7.3	12.2	20.1	15.1	24.9	18.2	29.8	4.52	9.04
3.360	1.6	2.9	3.4	5.2	4.2	6.3	5.1	7.6	12.7	21.0	15.8	26.1	19.0	31.2	4.75	9.50
3.515	1.7	3.0	3.6	5.4	4.3	6.6	5.3	8.0	13.3	22.0	16.5	27.2	19.8	32.5	4.99	9.98
3.670	1.8	3.1	3.7	5.7	4.5	6.9	5.5	8.3	13.8	22.9	17.1	28.4	20.6	33.9	5.23	10.46
3.825	1.8	3.2	3.9	5.9	4.7	7.2	5.8	8.7	14.4	23.9	17.8	29.6	21.4	35.3	5.48	10.96
3.980	1.9	3.4	4.1	6.2	4.9	7.5	6.0	9.1	14.9	24.8	18.5	30.8	22.2	36.7	5.73	11.46
4.135	2.0	3.5	4.2	6.4	5.1	7.8	6.3	9.5	15.5	25.8	19.2	32.0	23.0	38.2	5.99	11.98
4.290	2.1	3.6	4.4	6.7	5.3	8.1	6.5	9.9	16.1	26.8	20.0	33.3	23.9	39.6	6.25	12.50
4.445	2.1	3.8	4.6	7.0	5.5	8.5	6.7	10.3	16.7	27.8	20.7	34.5	24.7	41.1	6.52	13.04
4.600	2.2	3.9	4.7	7.2	5.8	8.8	7.0	10.6	17.3	28.9	21.4	35.8	25.6	42.6	6.79	13.58
4.755	2.3	4.0	4.9	7.5	6.0	9.1	7.2	11.0	17.8	29.9	22.1	37.1	26.5	44.1	7.06	14.12
4.910	2.3	4.2	5.1	7.8	6.2	9.5	7.5	11.5	18.4	30.9	22.9	38.4	27.3	45.6	7.34	14.68
5.065	2.4	4.3	5.2	8.1	6.4	9.8	7.8	11.9	19.0	32.0	23.6	39.7	28.2	47.2	7.63	15.26
5.220	2.5	4.5	5.4	8.4	6.6	10.1	8.0	12.3	19.7	33.1	24.4	41.0	29.1	48.8	7.92	15.84
5.375	2.6	4.6	5.6	8.6	6.8	10.5	8.3	12.7	20.3	34.2	25.2	42.4	30.0	50.3	8.21	16.42
5.530	2.7	4.8	5.8	8.9	7.0	10.8	8.5	13.1	20.9	35.3	25.9	43.7	30.9	51.9	8.51	17.02
5.685	2.7	4.9	5.9	9.2	7.2	11.2	8.8	13.5	21.5	36.4	26.7	45.1	31.9	53.6	8.82	17.64
5.840	2.8	5.1	6.1	9.5	7.5	11.6	9.1	14.0	22.2	37.5	27.5	46.5	32.8	55.2	9.13	18.26
5.995	2.9	5.2	6.3	9.8	7.7	11.9	9.3	14.4	22.8	38.6	28.3	47.9	33.8	56.9	9.44	18.88
6.150	3.0	5.4	6.5	10.1	7.9	12.3	9.6	14.9	23.5	39.8	29.1	49.3	34.7	58.5	9.76	19.52
6.305	3.1	5.5	6.7	10.4	8.1	12.7	9.9	15.3	24.1	40.9	29.9	50.8	35.7	60.2	10.08	20.16
6.460	3.1	5.7	6.9	10.7	8.4	13.0	10.1	15.7	24.8	42.1	30.7	52.2	36.6	61.9	10.41	20.82
CSPA 68 mm x 13 mm CORRUGATIONS																
1620 x 1100	0.9	1.5	1.3	1.9	1.5	2.3	1.8	2.7	5.5	8.9	6.8	11.0	8.5	13.8	2.23	4.46
1800 x 1200	1.0	1.6	1.4	2.0	1.6	2.4	2.0	2.9	5.8	9.5	7.2	11.8	9.0	14.6	2.42	4.84
1950 x 1320	1.0	1.7	1.5	2.2	1.7	2.6	2.1	3.2	6.2	10.1	7.7	12.5	9.5	15.5	2.58	5.16
2100 x 1450	1.1	1.8	1.6	2.4	1.9	2.8	2.3	3.4	6.6	10.8	8.1	13.4	10.0	16.4	2.74	5.48
CSPA 75 mm x 25 mm CORRUGATIONS																
1520 x 1170	1.0	1.6	1.2	1.9	1.5	2.2	1.8	2.7	5.3	8.6	6.6	10.7	8.1	13.1	2.38	4.76
1670 x 1300	1.0	1.7	1.4	2.0	1.6	2.4	2.0	2.9	5.8	9.4	7.2	11.7	8.6	13.9	2.59	5.18
1850 x 1400	1.1	1.8	1.4	2.2	1.7	2.6	2.1	3.1	6.1	9.9	7.5	12.3	9.1	14.7	2.81	5.62
2050 x 1500	1.1	1.9	1.6	2.4	1.9	2.9	2.3	3.5	6.6	10.9	8.2	13.5	9.9	16.0	2.86	5.72
2200 x 1620	1.2	2.0	1.7	2.6	2.0	3.1	2.5	3.7	7.0	11.6	8.7	14.4	10.4	16.9	3.07	6.14
2400 x 1720	1.2	2.1	1.8	2.7	2.2	3.3	2.6	4.0	7.4	12.2	9.2	15.2	10.9	17.8	3.27	6.54
2600 x 1820	1.3	2.2	1.9	2.9	2.3	3.5	2.8	4.2	7.8	12.9	9.7	16.1	11.4	18.7	3.50	7.00
2840 x 1920	1.4	2.4	2.0	3.1	2.4	3.7	2.9	4.5	8.2	13.6	10.1	16.9	11.9	19.6	3.72	7.44
2970 x 2020	1.5	2.5	2.1	3.3	2.5	3.9	3.1	4.7	8.6	14.3	10.6	17.8	12.4	20.5	3.94	7.88
3240 x 2120	1.5	2.6	2.2	3.4	2.7	4.1	3.2	5.0	9.0	15.0	11.1	18.7	12.9	21.4	4.16	8.32
3470 x 2220	1.6	2.7	2.3	3.6	2.8	4.3	3.4	5.2	9.4	15.8	11.6	19.6	13.5	22.4	4.38	8.76
3600 x 2320	1.7	2.9	2.4	3.8	2.9	4.6	3.6	5.5	9.8	16.5	12.1	20.5	14.0	23.3	4.62	9.24

NOTES:

① QUANTITIES ARE BASED ON A THICKNESS OF 600 mm AND ARE PROPORTIONED WHEN A DIFFERENT THICKNESS IS SPECIFIED.

② QUANTITIES ARE BASED ON BEDDING DETAILS SHOWN ON DTL. DWG. NO. 603-19 WITH A WIDTH EQUAL TO (DIAMETER OR SPAN) + 1200 mm + (2 TIMES SHELL THICKNESS FOR CONCRETE OR 2 TIMES CORRUGATION WIDTH FOR METAL) AND A DEPTH EQUALTO 600 mm + "X" + (SHELL THICKNESS FOR CONCRETE OR CORRUGATION WIDTH FOR METAL). TO COMPUTE THE TOTAL BEDDING QUANTITY MULTIPLY BY (LENGTH OF PIPE MINUS 7.0 m).

③ SEE DTL. DWG. NO. 603-32 AND 603-34 FOR "X" DIMENSIONS OF METAL PIPES.

④ FOR PIPES WITH SKEW BEVEL ENDS - DIVIDE THE QUANTITIES SHOWN BY COSINE OF SKEW ANGLE.

ALL DIMENSIONS ARE MILLIMETERS (mm) UNLESS OTHERWISE NOTED.

DETAILED DRAWING

REFERENCE STANDARD SPEC. SECTION 552, 603, 613

DWG. NO. 552-08

CONCRETE, RIPRAP AND BEDDING MATERIAL QUANTITIES FOR SING. AND DBL. CULVERT INSTALLATION

EFFECTIVE: APRIL 2006

serving you with pride

MONTANA DEPARTMENT OF TRANSPORTATION

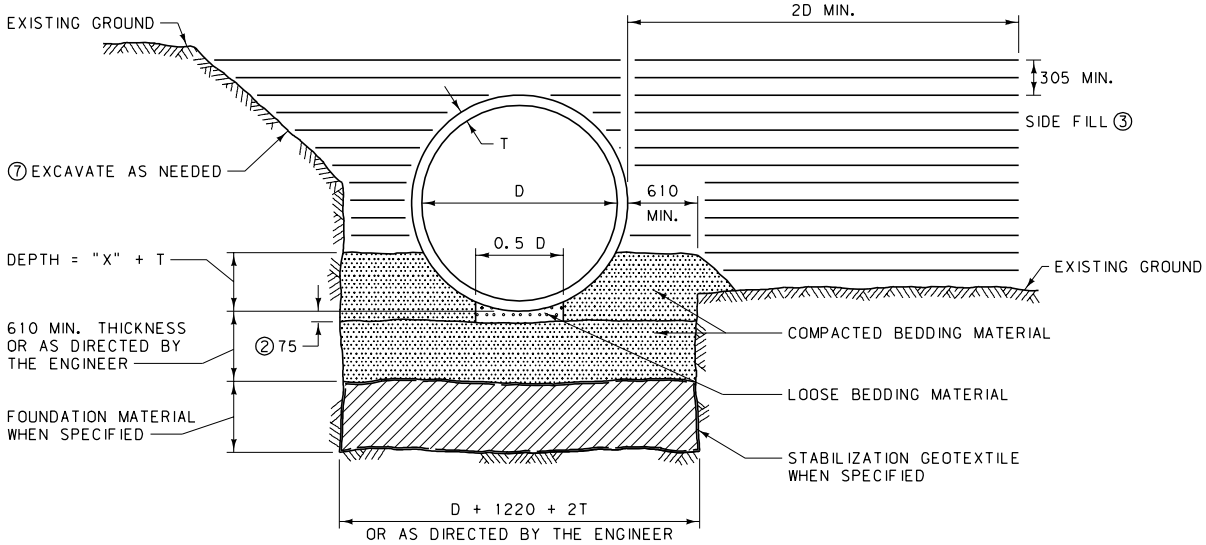

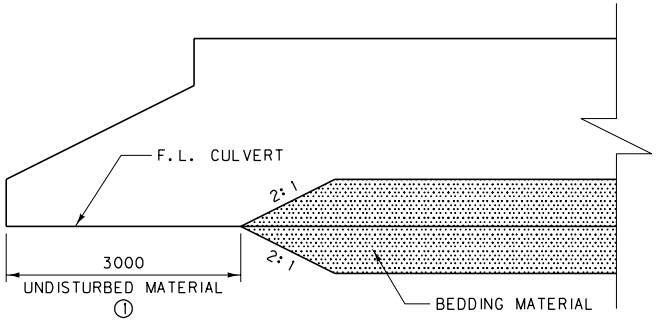

PIPE END DETAIL

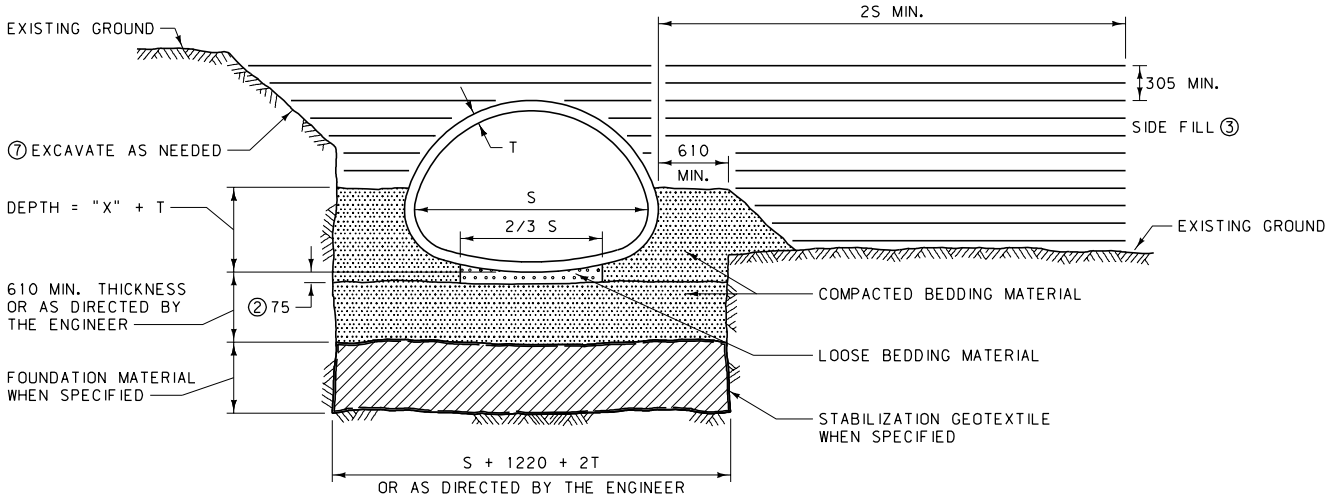

NOTES:

① DO NOT EXTEND BEDDING MATERIAL TO THE END OF THE PIPE. LEAVE 3000 mm OF UNDISTURBED MATERIAL AT EACH END UNLESS OTHERWISE NOTED IN PLANS. SEE PIPE END DETAIL.

② PLACE LOOSE BEDDING MATERIAL UNIFORMLY IN THE BOTTOM OF THE TRENCH AND SHAPE TO FIT BOTTOM OF PIPE. THE MINIMUM THICKNESS BEFORE PLACING PIPE IS 75 mm. RCP IRR. REQUIRE GREATER THAN 75 mm OF LOOSE BEDDING MATERIAL TO ACCOMODATE BELL THICKNESS. AFTER LAYING CULVERT, COMPACT BEDDING MATERIAL AT HAUNCHES AND SIDES OF PIPE.

③ COMPACT SIDE FILL IN 155 mm LOOSE LAYERS TO DENSITY SPECIFIED FOR ADJACENT EMBANKMENT. SEE SECTION 203.03.3 OF THE STANDARD SPECIFICATIONS FOR THE DENSITY REQUIREMENTS.

④ SEE SECTION 701.04 OF THE STANDARD SPECIFICATIONS FOR BEDDING AND FOUNDATION MATERIAL REQUIREMENTS.

⑤ DIMENSIONS D, S, AND R ARE THE INSIDE PIPE DIAMETER, SPAN, AND RISE. DIMENSION T IS THE CULVERT SHELL THICKNESS FOR CONCRETE OR CORRUGATION WIDTH FOR METAL.

⑥ SEE DTL. DWG. NO. 603-08 AND 603-10 FOR "X" DIMENSIONS OF CONCRETE PIPES. SEE DTL. DWG. NO. 603-32 AND 603-34 FOR "X" DIMENSIONS OF METAL PIPES.

⑦ EXCAVATE A SUFFICIENT AMOUNT TO PROVIDE A SAFE WORKING ENVIRONMENT AND TO ALLOW ACHIEVEMENT OF ALL CULVERT INSTALLATION AND COMPACTION REQUIREMENTS. SLOPE, BENCH OR PROVIDE SHORING FOR ALL EXCAVATIONS IN ACCORDANCE WITH THE U.S. DEPARTMENT OF LABOR, OCCUPATIONAL SAFETY AND HEALTH ADMINISTRATION (OSHA) SAFETY AND HEALTH REGULATIONS FOR CONSTRUCTION.

ALL DIMENSIONS ARE MILLIMETERS (mm) UNLESS OTHERWISE NOTED.

DETAILED DRAWING	
REFERENCE STANDARD SPEC. SECTION 207, 603, 701	DWG. NO. 603-19
CULVERT BEDDING FOR MAINLINE CROSSINGS 1350 mm EQUIVALENT & LARGER	
EFFECTIVE: APRIL 2006	
serving you with pride	MONTANA DEPARTMENT OF TRANSPORTATION

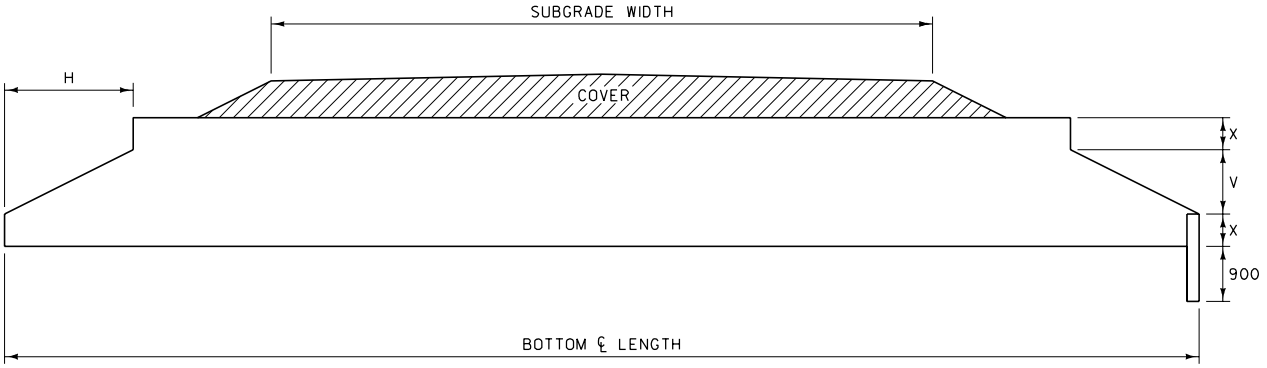

NOTE:
FOR DETAILS COVERING CUTOFF WALLS
SEE DTL. DWG. NO. 552-00.

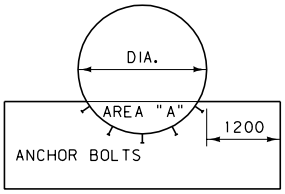

DIA.	X (m)	V (m)	H (m) FOR BEVELS:		AREA "A" (m²) *
			1.5:1	2:1	
CSP 75 x 25 OR 125 x 25 CORRUGATIONS					
1350	0.338	0.674	1.011	1.348	0.30
1500	0.375	0.750	1.125	1.500	0.37
1650	0.412	0.826	1.239	1.652	0.44
1800	0.450	0.900	1.350	1.800	0.52
1950	0.488	0.974	1.461	1.948	0.61
2100	0.525	1.050	1.575	2.100	0.70
2250	0.563	1.124	1.686	2.248	0.81
2400	0.600	1.200	1.800	2.400	0.92
2550	0.637	1.276	1.914	2.552	1.03
2700	0.675	1.350	2.025	2.700	1.15
2850	0.712	1.426	2.139	2.852	1.28
3000	0.750	1.500	2.250	3.000	1.42

DIA.	X (m)	V (m)	H (m) FOR BEVELS:		AREA "A" (m²) *
			1.5:1	2:1	
SSPP 152 x 51 CORRUGATIONS					
3.205	0.802	1.605	2.408	3.210	1.67
3.360	0.841	1.682	2.523	3.364	1.83
3.515	0.880	1.760	2.640	3.520	2.00
3.670	0.919	1.837	2.756	3.674	2.17
3.825	0.957	1.916	2.874	3.832	2.36
3.980	0.996	1.993	2.990	3.986	2.55
4.135	1.035	2.071	3.107	4.142	2.74
4.290	1.074	2.148	3.222	4.296	2.95
4.445	1.113	2.225	3.338	4.450	3.16
4.600	1.152	2.302	3.453	4.604	3.38
4.755	1.190	2.381	3.572	4.762	3.61
4.910	1.229	2.459	3.689	4.918	3.84
5.065	1.268	2.536	3.804	5.072	4.09
5.220	1.307	2.613	3.920	5.226	4.34
5.375	1.346	2.690	4.035	5.380	4.59
5.530	1.384	2.770	4.155	5.540	4.86
5.685	1.423	2.847	4.271	5.694	5.13
5.840	1.462	2.924	4.386	5.848	5.41
5.995	1.501	3.001	4.502	6.002	5.69
6.150	1.540	3.079	4.619	6.158	5.99
6.305	1.578	3.158	4.737	6.316	6.29
6.460	1.617	3.235	4.853	6.470	6.60

* AREA "A" IS TO THE MIDDLE OF THE CORRUGATIONS.

NOMINAL DIAMETER

ALL DIMENSIONS ARE MILLIMETERS (mm) UNLESS OTHERWISE NOTED.

DETAILED DRAWING

REFERENCE
STANDARD SPEC.
SECTION 603

DWG. NO.
603-32

STEP BEVEL FOR
CIRCULAR METAL CULVERT

EFFECTIVE: APRIL 2006

serving you with pride

MONTANA DEPARTMENT OF TRANSPORTATION

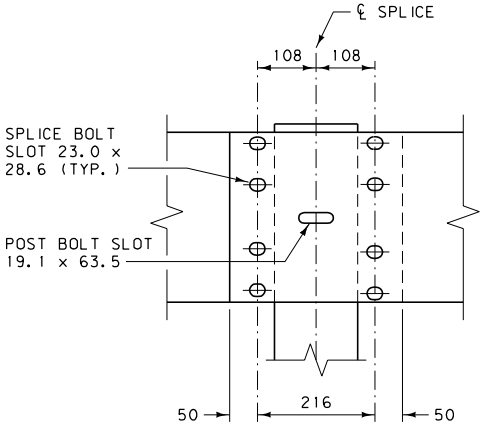

BEAM SPLICE

(LAP IN DIRECTION OF ADJACENT TRAFFIC)

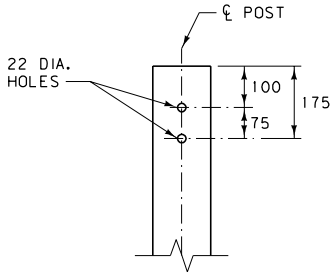

POST HOLE DETAIL

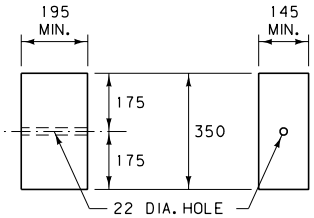

WOOD BLOCK

PDB01*

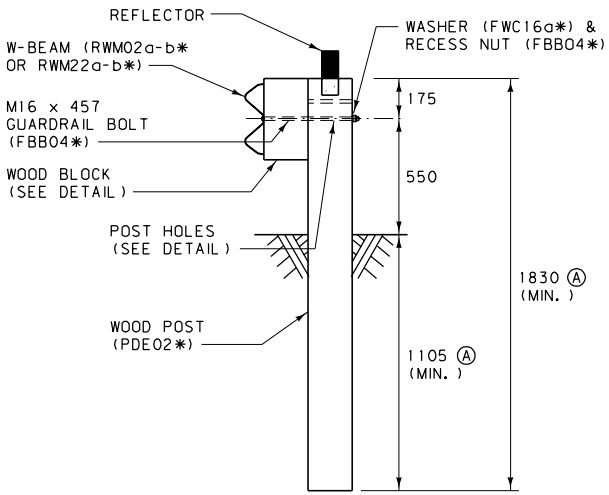

WOOD POST AND MOUNTING DETAIL

Ⓐ STANDARD UNLESS SPECIFIED OTHERWISE IN PLANS.

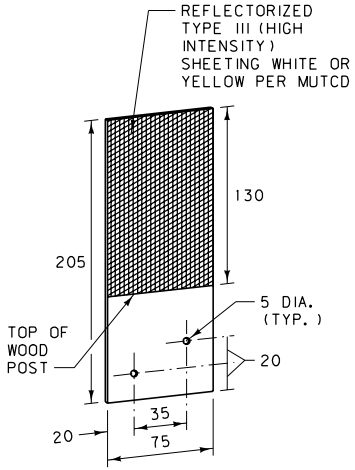

REFLECTOR

(SEE NOTES)

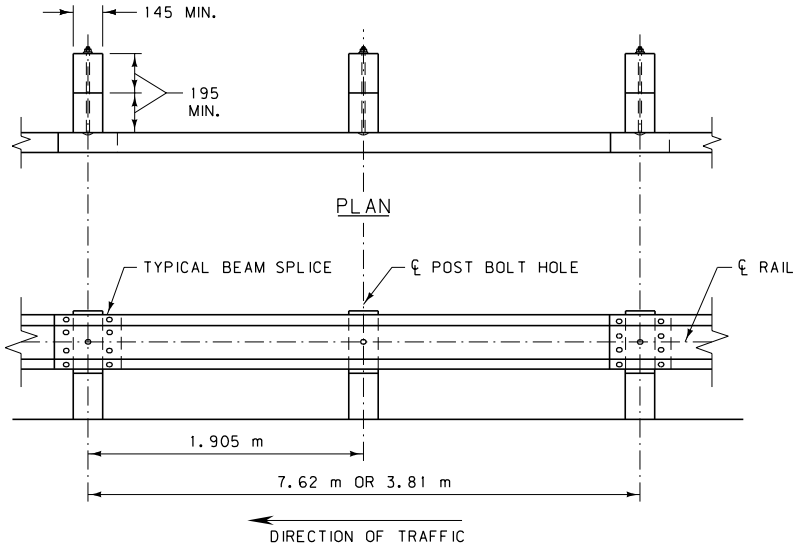

ELEVATION

TYPICAL INSTALLATION

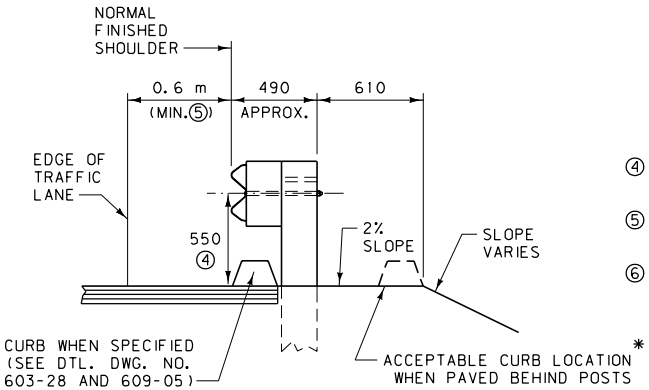

NOTES:

① INSTALL ALL BOLTS WITH HEADS ON TRAFFIC SIDE OF INSTALLATION.

② USE WOOD BLOCKS OR OTHER NCHRP 350 APPROVED BLOCKS. AFFIX WOOD BLOCKS TO POSTS WITH TWO 16 PENNY GALV. NAILS OR 14 GAGE WIRE WRAP.

③ ATTACH REFLECTORS TO POSTS EVERY 7.62 m, INCLUDING TERMINAL SECTIONS, WITH THE REFLECTORIZED SURFACE FACING ADJACENT TRAFFIC. FABRICATE REFLECTORS FROM 1.6 mm THICK ALUMINUM ALLOY MEETING THE REQUIREMENTS OF STD. SPEC. 704. FASTEN REFLECTOR TO WOOD POST USING TWO 16 PENNY RING-SHANKED GALVANIZED NAILS AND TWO 4.8 mm DIA. WASHERS IN PRE-DRILLED HOLES.

④ ON EXISTING GUARDRAIL INSTALLATIONS, THE MINIMUM RAIL HEIGHT IS 460 mm.

⑤ WIDENING IS REQUIRED IF FINISHED SHOULDER IS LESS THAN 0.6 m FROM TRAFFIC LANE.

⑥ DO NOT INSTALL W-BEAM GUARDRAIL FOR OBSTACLES WITHIN 1.7 m OF THE FACE OF THE RAIL.

* SEE DTL. DWG. NO. 606-80 FOR SCHEDULE OF GUARDRAIL HARDWARE.

ALL DIMENSIONS ARE MILLIMETERS (mm) UNLESS OTHERWISE NOTED.

DETAILED DRAWING	
REFERENCE STANDARD SPEC. SECTION 606	DWG. NO. 606-05A
METAL GUARDRAIL - WOOD POSTS	
EFFECTIVE: APRIL 2006	

MDT serving you with pride — MONTANA DEPARTMENT OF TRANSPORTATION

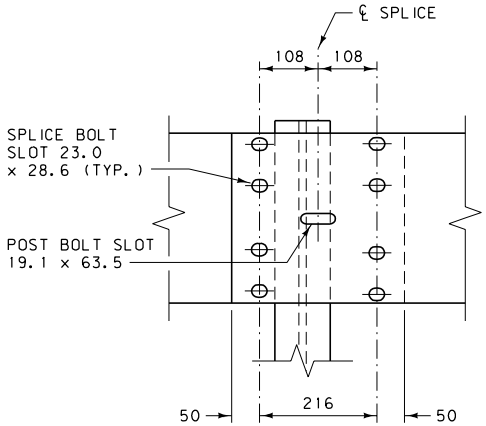

BEAM SPLICE

(LAP IN DIRECTION OF ADJACENT TRAFFIC)

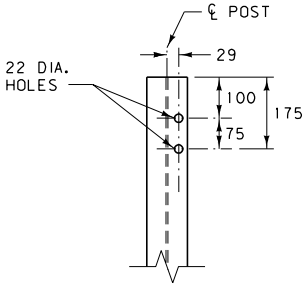

POST HOLE DETAIL

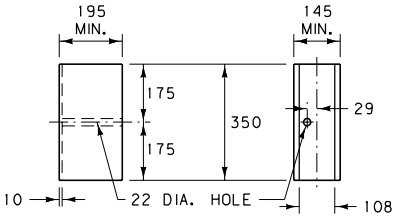

ROUTED WOOD BLOCK

PDB01*

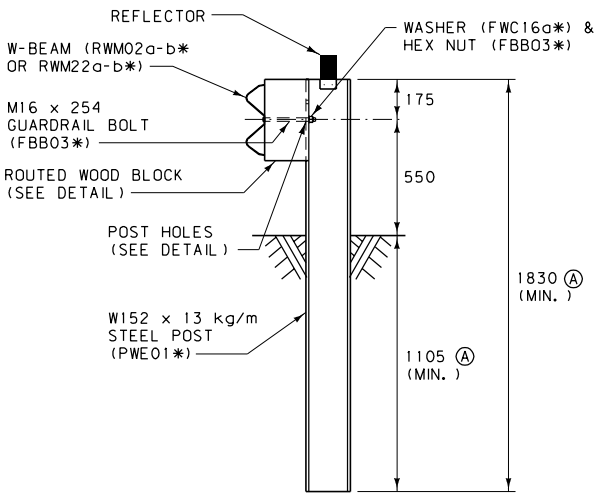

STEEL POST AND MOUNTING DETAIL

Ⓐ STANDARD UNLESS SPECIFIED OTHERWISE IN PLANS.

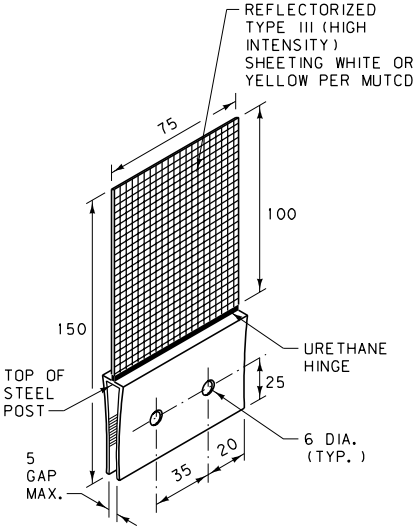

REFLECTOR

(SEE NOTES)

NOTES:

1. INSTALL ALL BOLTS WITH HEADS ON TRAFFIC SIDE OF INSTALLATION.
2. USE ROUTED WOOD BLOCKS OR OTHER NCHRP 350 APPROVED BLOCKS.
3. ATTACH REFLECTORS TO POSTS EVERY 7.62 m, INCLUDING TERMINAL SECTIONS, WITH THE REFLECTORIZED SURFACE FACING ADJACENT TRAFFIC. FASTEN REFLECTOR TO STEEL POST USING AN APPROVED ADHESIVE. REFLECTORS MAY BE BOLTED TO POSTS PROVIDED HOLES IN POST ARE DRILLED BEFORE BEING GALVANIZED.
4. ON EXISTING GUARDRAIL INSTALLATIONS, THE MINIMUM RAIL HEIGHT IS 460 mm.
5. WIDENING IS REQUIRED IF FINISHED SHOULDER IS LESS THAN 0.6 m FROM THE THE TRAFFIC LANE.
6. STEEL POSTS WITH OTHER HOLE CONFIGURATIONS MAY BE ACCEPTED, PROVIDED THEY HAVE AT LEAST THE HOLES DETAILED ON THIS DRAWING AND THEY MEET AASHTO'S PUBLICATION, "A GUIDE TO STANDARDIZED HIGHWAY BARRIER HARDWARE" AND NCHRP 350 REQUIREMENTS.
7. DO NOT INSTALL W-BEAM GUARDRAIL FOR OBSTACLES WITHIN 1.7 m OF THE FACE OF THE RAIL.

* SEE DTL. DWG. NO. 606-80 FOR SCHEDULE OF GUARDRAIL HARDWARE.

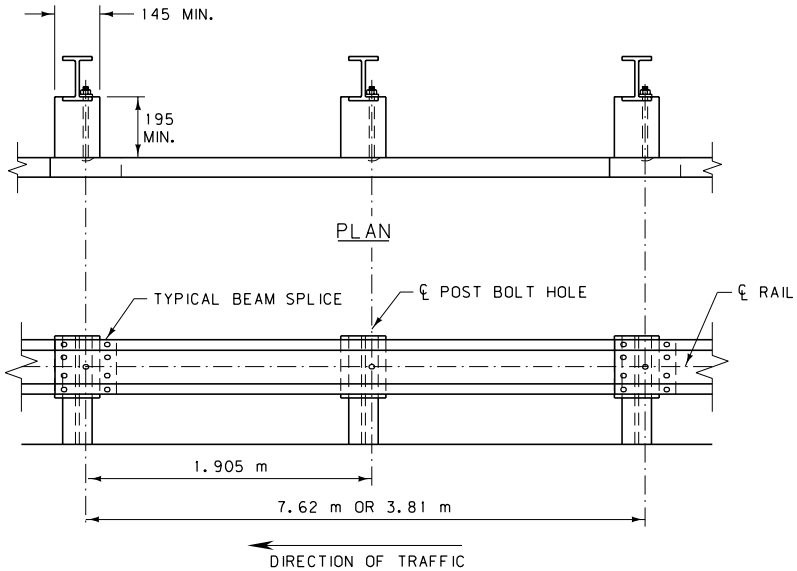

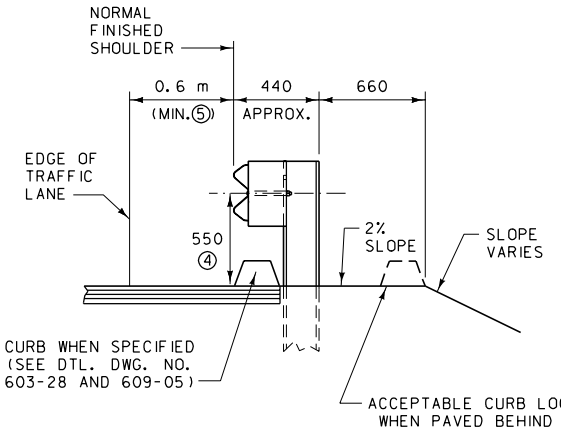

TYPICAL INSTALLATION

ALL DIMENSIONS ARE MILLIMETERS (mm) UNLESS OTHERWISE NOTED.

DETAILED DRAWING	
REFERENCE STANDARD SPEC. SECTION 606	DWG. NO. 606-05B
METAL GUARDRAIL - STEEL POSTS	
EFFECTIVE: APRIL 2006	

MDT serving you with pride — MONTANA DEPARTMENT OF TRANSPORTATION

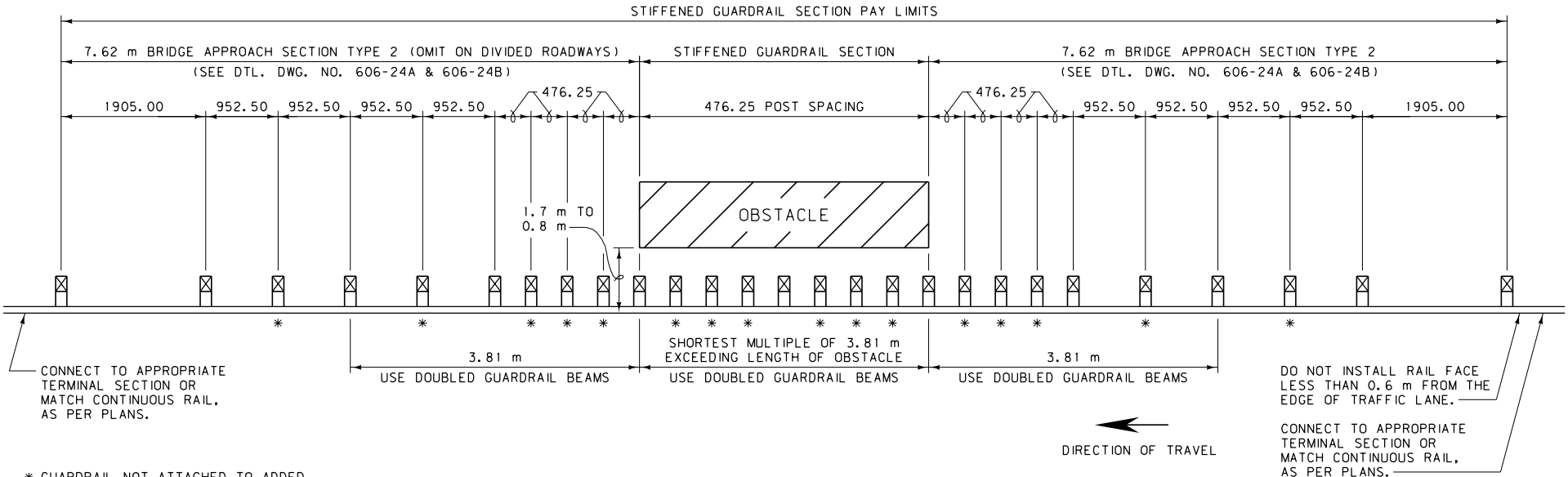

LINE OBSTACLE APPLICATION

* GUARDRAIL NOT ATTACHED TO ADDED POSTS. BLOCK-OUT FASTENED TO POST WITH STANDARD POST BOLT.

GUARDRAIL ATTACHED TO POSTS ONLY AT STANDARD MULTIPLES OF 1.905 m THROUGH OBSTACLE SECTION.

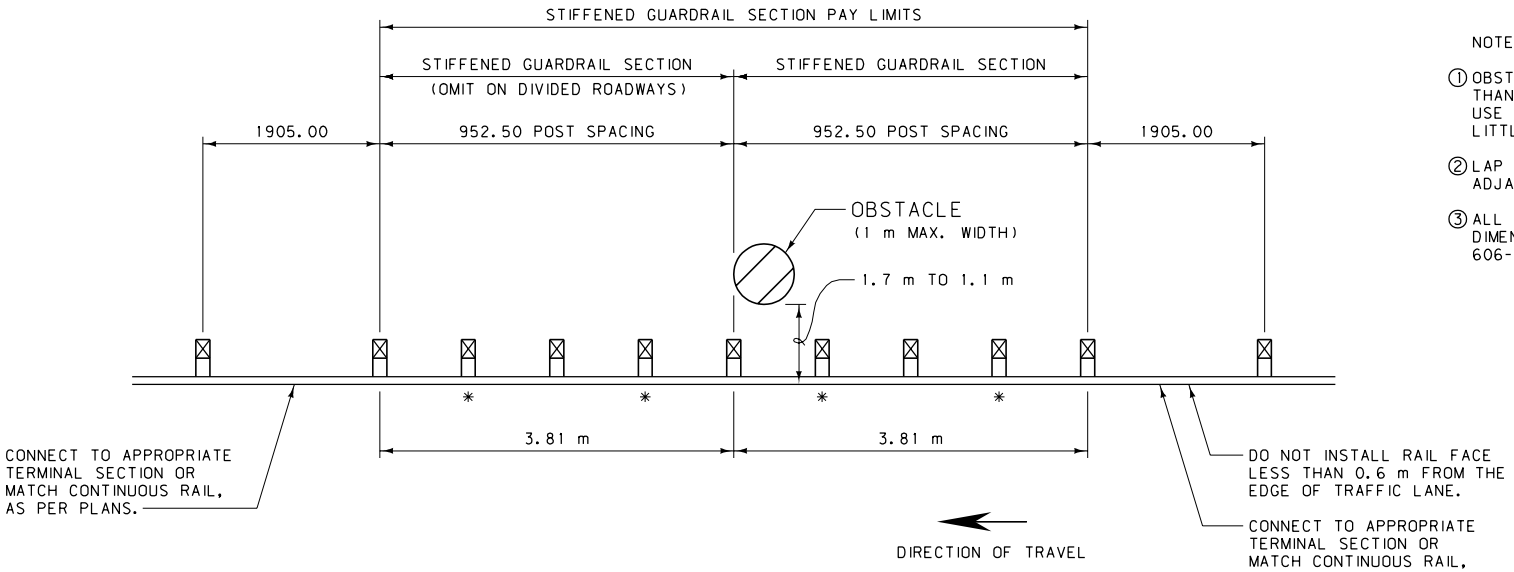

POINT OBSTACLE APPLICATION

NOTES:

1. OBSTACLES CLOSER TO THE FACE OF RAIL THAN THE INDICATED LIMITS REQUIRE THE USE OF A RIGID BARRIER SYSTEM WITH LITTLE TO NO DYNAMIC DEFLECTION.
2. LAP ALL DOUBLED RAIL IN THE DIRECTION OF ADJACENT TRAFFIC.
3. ALL POSTS AND BLOCKS ARE STANDARD DIMENSIONS AS PER DETAILED DRAWING NO. 606-05A AND 606-05B.

ALL DIMENSIONS ARE MILLIMETERS (mm) UNLESS OTHERWISE NOTED.

DETAILED DRAWING	
REFERENCE STANDARD SPEC. SECTION 606	DWG. NO. 606-07
STIFFENED GUARDRAIL SECTIONS	
EFFECTIVE: APRIL 2006	

MDT serving you with pride — MONTANA DEPARTMENT OF TRANSPORTATION

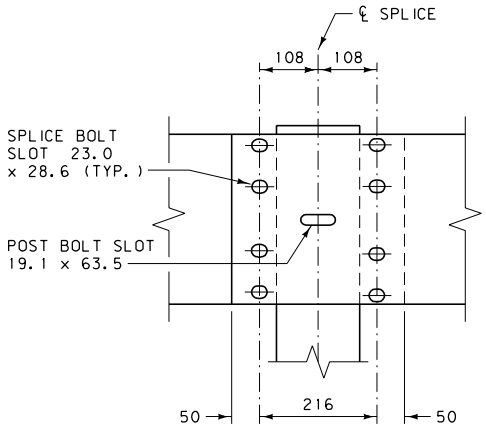

BEAM SPLICE

(LAP IN DIRECTION OF ADJACENT TRAFFIC)

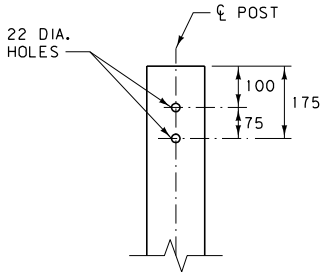

POST HOLE DETAIL

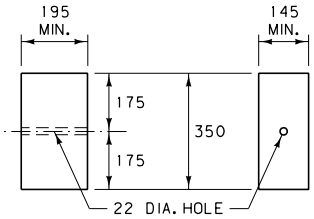

WOOD BLOCK

PDB01✱

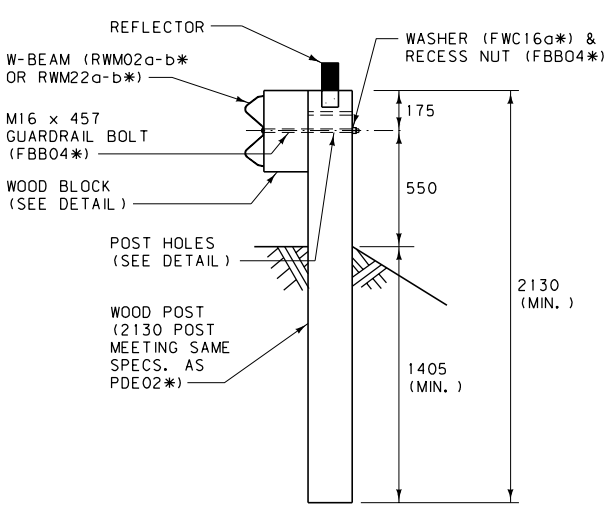

WOOD POST AND MOUNTING DETAIL

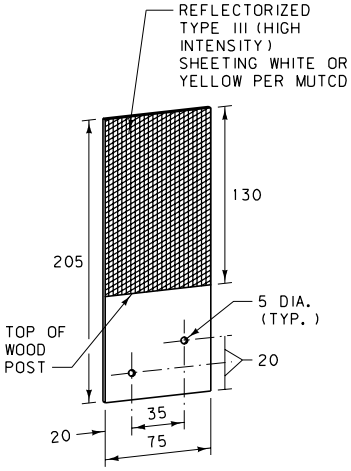

REFLECTOR

(SEE NOTES)

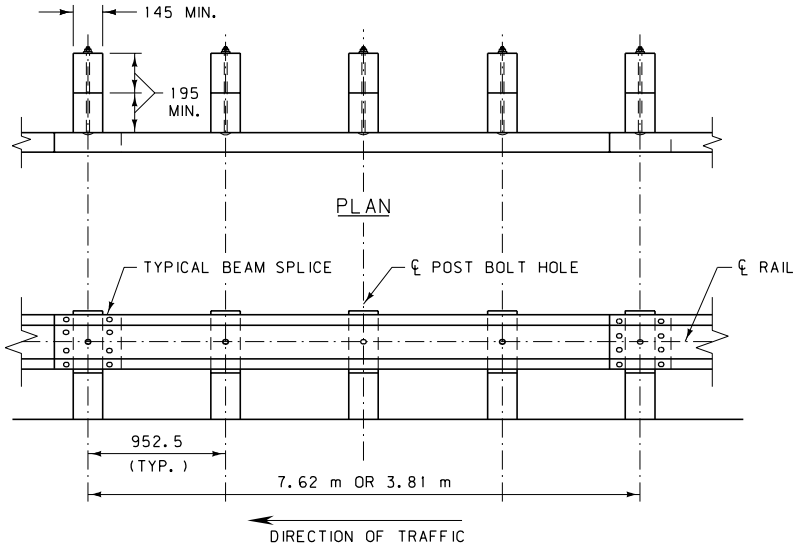

ELEVATION

NOTES:

1. INSTALL ALL BOLTS WITH HEADS ON TRAFFIC SIDE OF INSTALLATION.
2. USE WOOD BLOCKS OR OTHER NCHRP 350 APPROVED BLOCKS. AFFIX BLOCKS TO POSTS WITH TWO 16 PENNY GALV. NAILS OR 14 GAGE WIRE WRAP.
3. ATTACH REFLECTORS TO POSTS EVERY 7.62 m, INCLUDING TERMINAL SECTIONS, WITH THE REFLECTORIZED SURFACE FACING ADJACENT TRAFFIC. FABRICATE REFLECTORS FROM 1.6 mm THICK ALUMINUM ALLOY MEETING THE REQUIREMENTS OF STD. SPEC. 704. FASTEN REFLECTOR TO WOOD POST USING TWO 16 PENNY RING-SHANKED GALVANIZED NAILS AND TWO 4.8 mm DIA. WASHERS IN PRE-DRILLED HOLES.
4. ON EXISTING GUARDRAIL INSTALLATIONS, THE MINIMUM RAIL HEIGHT IS 460 mm.
5. THE W-BEAM RAIL ON THIS SYSTEM REQUIRES ADDITIONAL HOLES TO ACCOMODATE BEING BOLTED TO POSTS AT HALF THE NORMAL POST SPACING. DRILL ADDITIONAL HOLES IN THE W-BEAM RAIL PRIOR TO APPLYING CORROSION PROTECTION.
6. DO NOT INSTALL W-BEAM GUARDRAIL WITH 2.1 m POSTS FOR OBSTACLES WITHIN 1.4 m OF THE FACE OF THE RAIL.

✱ SEE DTL. DWG. NO. 606-80 FOR SCHEDULE OF GUARDRAIL HARDWARE.

ALL DIMENSIONS ARE MILLIMETERS (mm) UNLESS OTHERWISE NOTED.

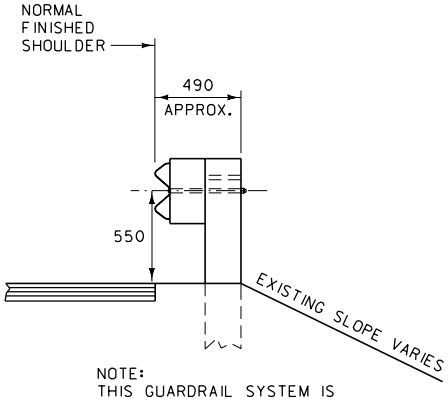

NOTE:
THIS GUARDRAIL SYSTEM IS USED WHEN THE 610 mm WIDENING BEHIND THE POSTS CANNOT BE PROVIDED, AS PER DTL. DWG. NO. 606-05A & 606-05B.

PROFILE

DETAILED DRAWING	
REFERENCE STANDARD SPEC. SECTION 606	DWG. NO. 606-11A
METAL GUARDRAIL - 2.1 m WOOD POSTS	
EFFECTIVE: APRIL 2006	

MDT serving you with pride — MONTANA DEPARTMENT OF TRANSPORTATION

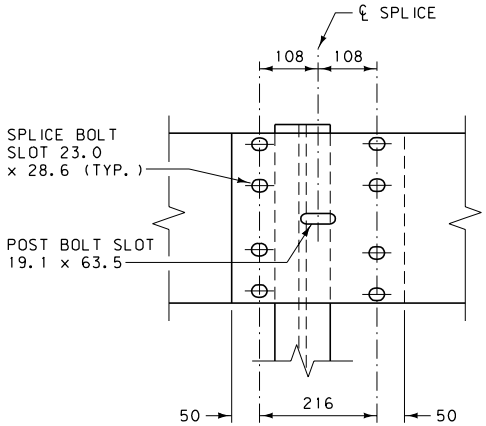

BEAM SPLICE

(LAP IN DIRECTION OF ADJACENT TRAFFIC)

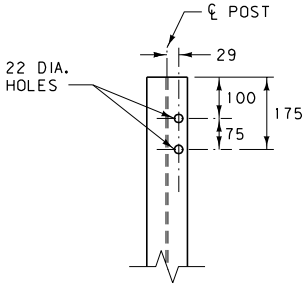

POST HOLE DETAIL

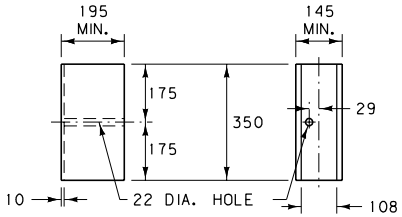

ROUTED WOOD BLOCK

PDB01*

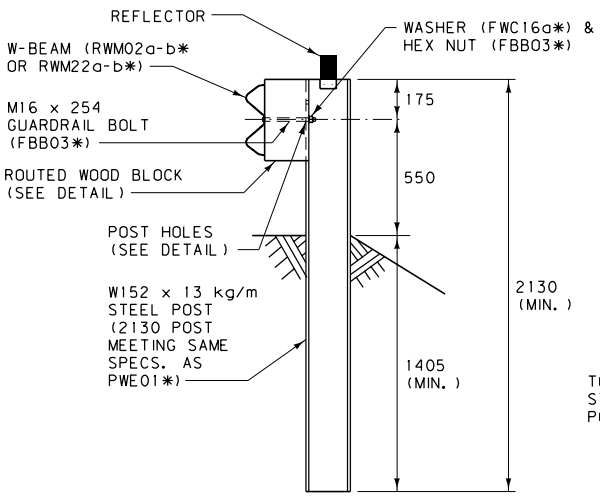

STEEL POST AND MOUNTING DETAIL

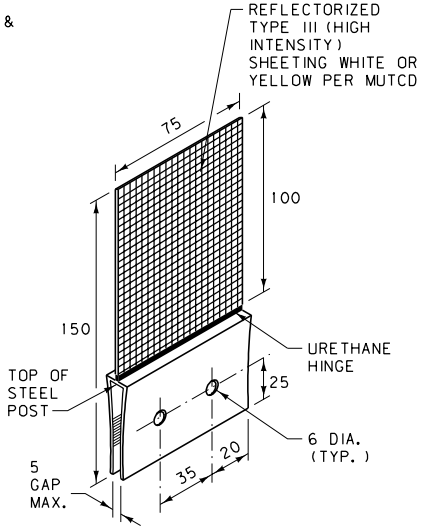

REFLECTOR

(SEE NOTES)

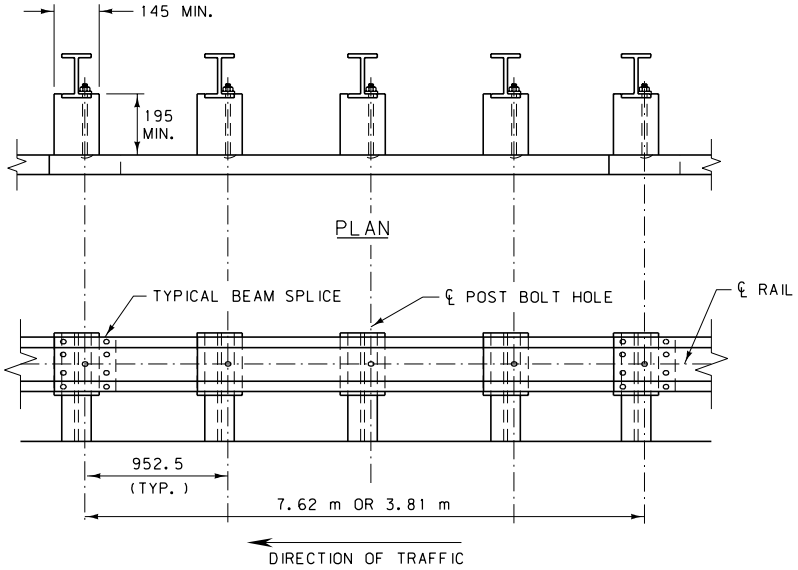

ELEVATION

NOTES:

1. INSTALL ALL BOLTS WITH HEADS ON TRAFFIC SIDE OF INSTALLATION.
2. USE ROUTED WOOD BLOCKS OR OTHER NCHRP 350 APPROVED BLOCKS.
3. ATTACH REFLECTORS TO POSTS EVERY 7.62 m, INCLUDING TERMINAL SECTIONS, WITH THE REFLECTORIZED SURFACE FACING ADJACENT TRAFFIC. FASTEN REFLECTOR TO STEEL POST USING AN APPROVED ADHESIVE. REFLECTORS MAY BE BOLTED TO POSTS PROVIDED HOLES IN POSTS ARE DRILLED BEFORE BEING GALVANIZED.
4. ON EXISTING GUARDRAIL INSTALLATIONS, THE MINIMUM RAIL HEIGHT IS 460 mm.
5. STEEL POSTS WITH OTHER POST HOLE CONFIGURATIONS MAY BE ACCEPTED, PROVIDED THEY HAVE AT LEAST THE HOLES DETAILED ON THIS DRAWING AND THEY MEET AASHTO'S PUBLICATION, "A GUIDE TO STANDARDIZED HIGHWAY BARRIER HARDWARE" AND NCHRP 350 REQUIRMENTS.
6. THE W-BEAM RAIL ON THIS SYSTEM REQUIRES ADDITIONAL HOLES TO ACCOMODATE BEING BOLTED TO POSTS AT HALF THE NORMAL POST SPACING. DRILL ADDITIONAL HOLES IN THE W-BEAM RAIL PRIOR TO APPLYING CORROSION PROTECTION.
7. DO NOT INSTALL W-BEAM GUARDRAIL WITH 2.1 m POSTS FOR OBSTACLES WITHIN 1.4 m OF THE FACE OF THE RAIL.

* SEE DTL. DWG. NO. 606-80 FOR SCHEDULE OF GUARDRAIL HARDWARE.

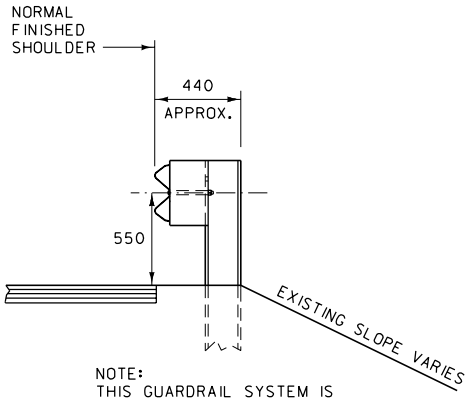

NOTE:
THIS GUARDRAIL SYSTEM IS USED WHEN THE 610 mm WIDENING BEHIND THE POSTS CANNOT BE PROVIDED, AS PER DTL. DWG. NO. 606-05A & 606-05B.

PROFILE

ALL DIMENSIONS ARE MILLIMETERS (mm) UNLESS OTHERWISE NOTED.

DETAILED DRAWING	
REFERENCE STANDARD SPEC. SECTION 606	DWG. NO. 606-11B
METAL GUARDRAIL - 2.1 m STEEL POSTS	
EFFECTIVE: APRIL 2006	
serving you with pride	MONTANA DEPARTMENT OF TRANSPORTATION

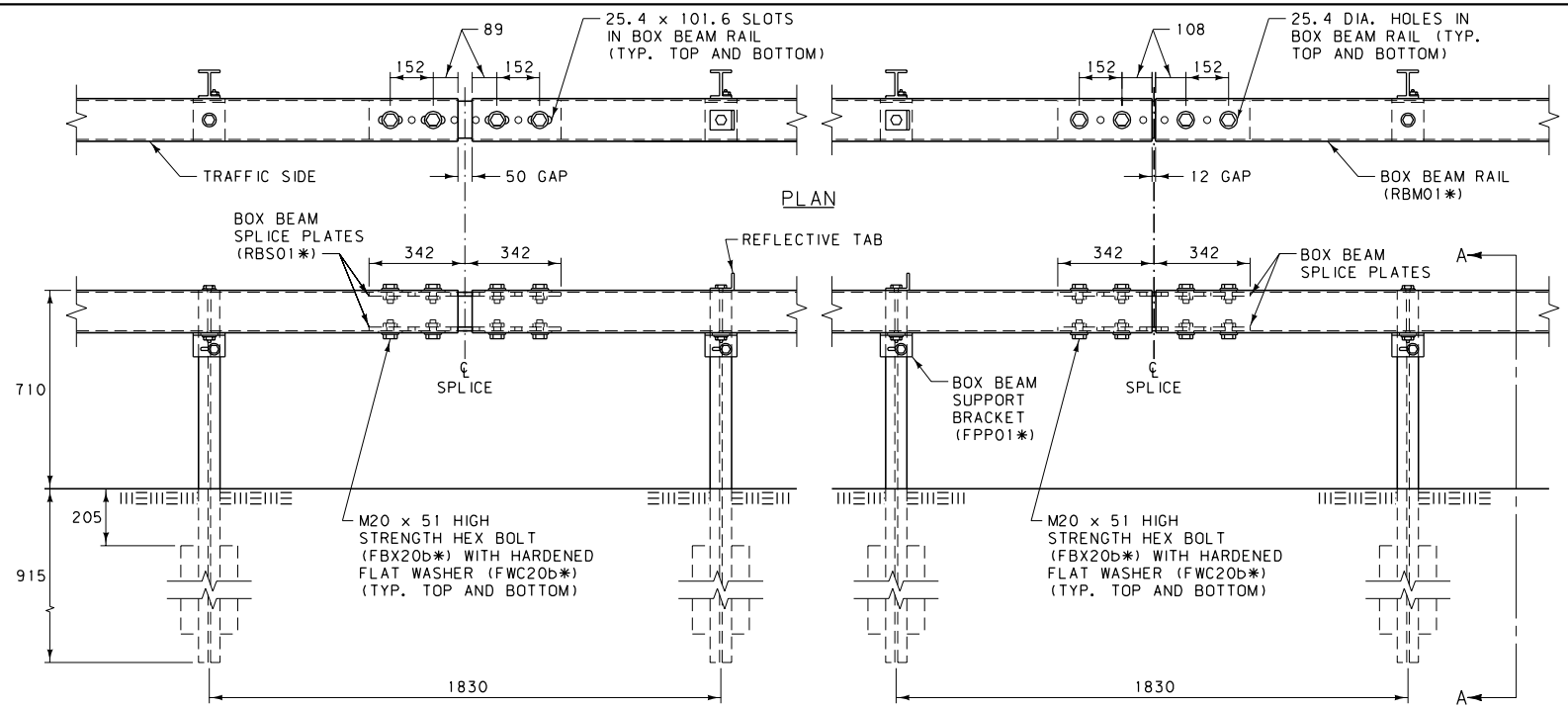

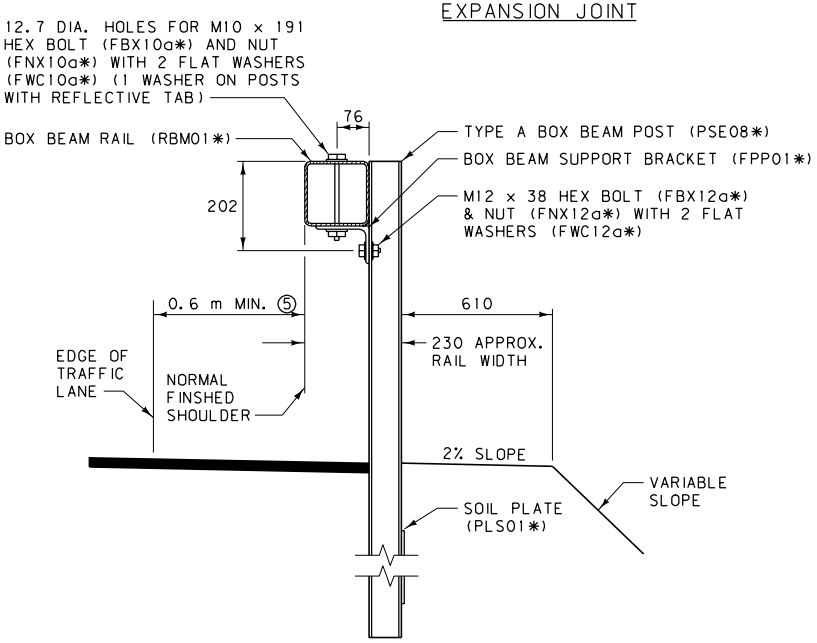

NOTES:

① USE BOX BEAM RAIL IN MINIMUM NOMINAL LENGTHS OF 5.49 m UNLESS APPROVED BY THE ENGINEER.

② INSTALL EXPANSION JOINTS ON ALL BOX BEAM GUARDRAIL INSTALLATIONS GREATER THAN 90 m IN LENGTH AT INTERVALS NOT TO EXCEED 150 m.

③ ATTACH REFLECTIVE TABS TO EVERY FOURTH POST (7.32 m TYP.) ANGLE TABS SLIGHTLY TOWARDS TRAFFIC. DO NOT USE REFLECTIVE TABS ON WY-BET TERMINALS. WY-BET TERMINALS RECEIVE REFLECTIVE CHANNELS.

④ DO NOT INSTALL BOX BEAM GUARDRAIL FOR OBSTACLES WITHIN 1.8 m OF THE FACE OF THE RAIL.

⑤ WIDENING IS REQUIRED IF FINISHED SHOULDER IS LESS THAN 0.6 m FROM THE TRAFFIC LANE.

* SEE DTL. DWG. NO. 606-80 FOR SCHEDULE OF GUARDRAIL HARDWARE.

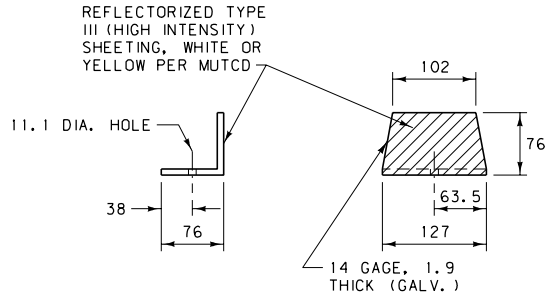

REFLECTIVE TAB

ALL DIMENSIONS ARE MILLIMETERS (mm) UNLESS OTHERWISE NOTED.

DETAILED DRAWING	
REFERENCE STANDARD SPEC. SECTION 606	DWG. NO. 606-50
BOX BEAM GUARDRAIL	
EFFECTIVE: APRIL 2006	

MDT serving you with pride — MONTANA DEPARTMENT OF TRANSPORTATION

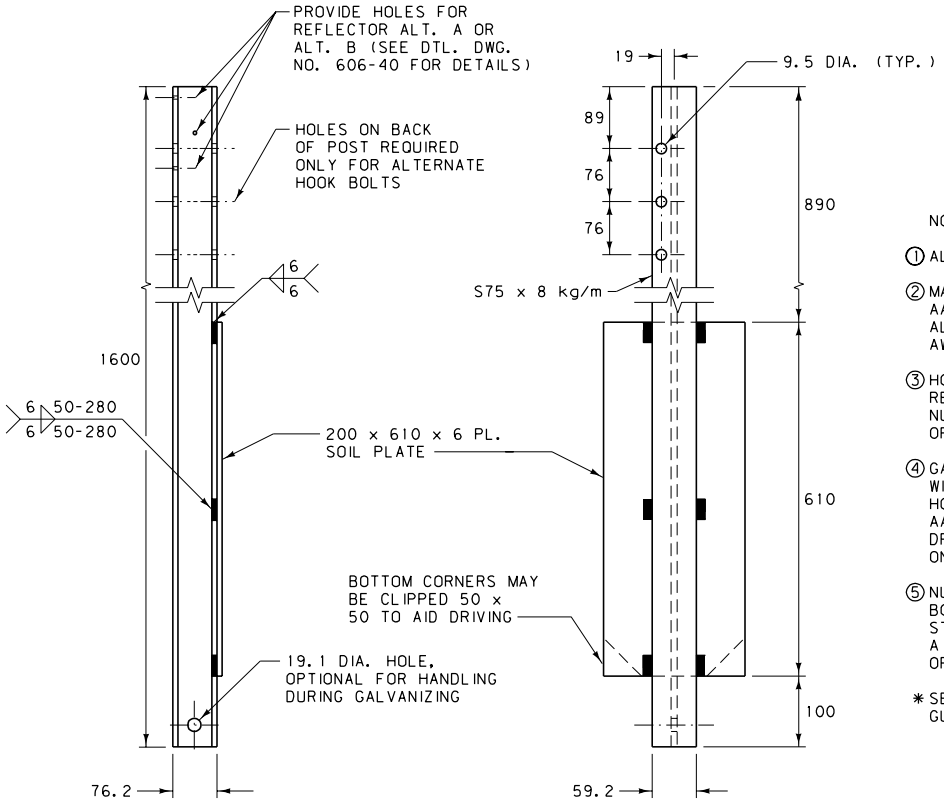

NOTES:

1. ALL HOLES ARE 9.5 mm DIA. EXCEPT AS NOTED.
2. MANUFACTURE POSTS AND SOIL PLATES USING AASHTO M270M (ASTM A709M) GRADE 250 STEEL. ALL WELDING IS TO CONFORM TO THE APPLICABLE AWS CODE.
3. HOOK BOLTS ARE TO CONFORM TO THE REQUIREMENTS OF ASTM 568M CLASS 4.6. NUTS ARE TO CONFORM TO THE REQUIREMENTS OF AASHTO M291M (ASTM A563M) CLASS 5.
4. GALVANIZE FABRICATED PARTS IN ACCORDANCE WITH AASHTO M111M (ASTM A123M). GALVANIZE HOOK BOLTS AND NUTS IN ACCORDANCE WITH AASHTO M232M (ASTM A153M). NO PUNCHING, DRILLING, WELDING OR CUTTING IS PERMITTED ON COMPONENTS AFTER GALVANIZING.
5. NUTS ARE OF THE HEAVY HEX TYPES. INSTALL BOLTS TO DEVELOP AN ULTIMATE PULL OPEN STRENGTH FROM 2225 N TO 4450 N APPLIED IN A DIRECTION NORMAL TO THE LONGITUDINAL AXIS OF THE POST.

* SEE DTL. DWG. NO. 606-80 FOR SCHEDULE OF GUARDRAIL HARDWARE.

CABLE GUARDRAIL POST AND SOIL PLATE

PSE01* AND PLS01*

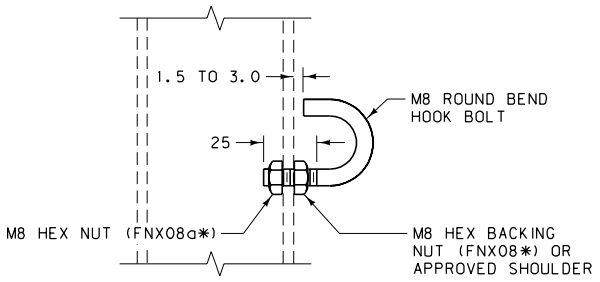

M8 HOOK BOLT

FBH01*

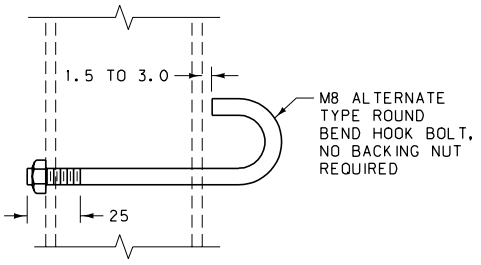

ALTERNATE M8 HOOK BOLT

FBH02*

ALL DIMENSIONS ARE MILLIMETERS (mm) UNLESS OTHERWISE NOTED.

DETAILED DRAWING	
REFERENCE STANDARD SPEC. SECTION 606	DWG. NO. 606-92
CABLE GUARDRAIL HARDWARE	
EFFECTIVE: APRIL 2006	
serving you with pride	MONTANA DEPARTMENT OF TRANSPORTATION

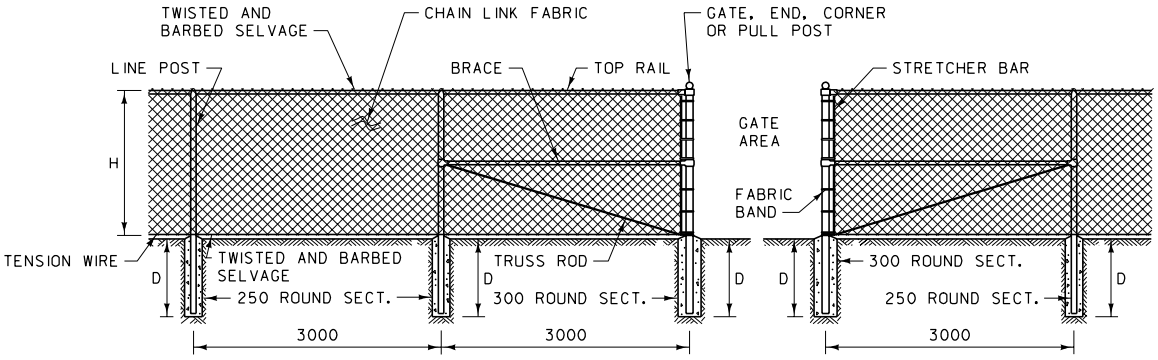

CHAIN LINK FENCE - 1.8 m AND 2.4 m

SINGLE PANEL

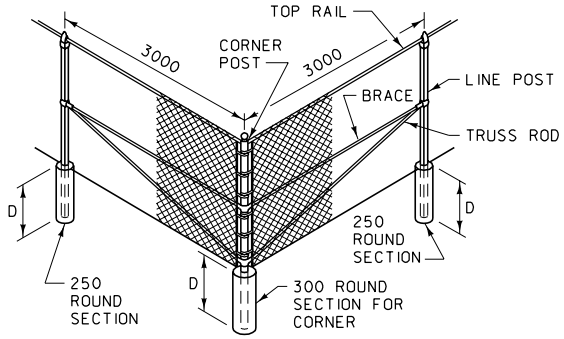

DOUBLE PANEL

PULL POST AND CORNER POST BRACING

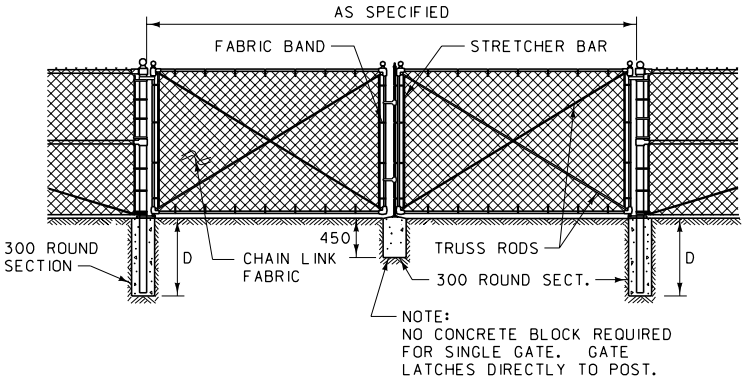

GATES

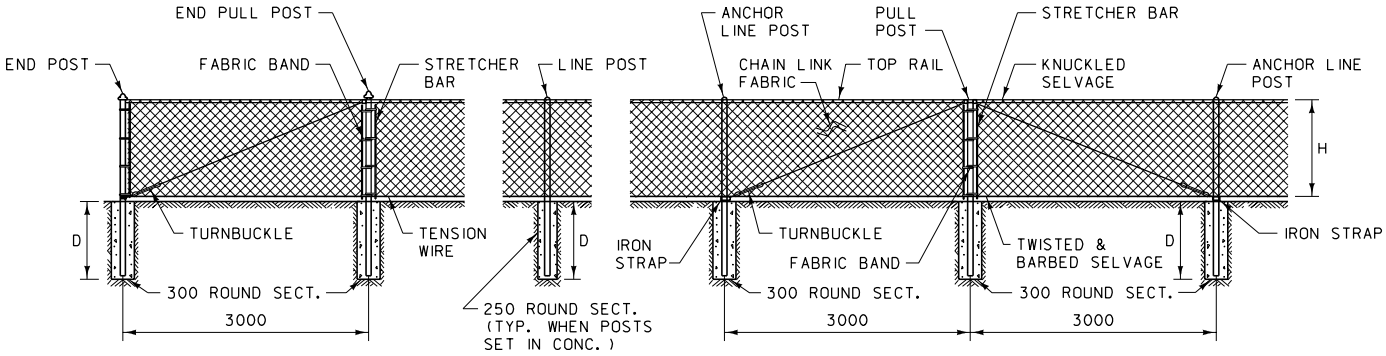

CHAIN LINK FENCE - 0.9 m, 1.2 m AND 1.5 m

NOTES:

SEE THE STANDARD SPECIFICATIONS FOR FURTHER REQUIREMENTS.

DO NOT INSTALL DOUBLE PANELS MORE THAN 90 m APART ON TANGENTS OR MORE THAN 75 m APART ON ANY CURVE. FOR CURVES WITH A RADIUS SHARPER THAN 350 m, INSTALL A DOUBLE PANEL ON EACH CURVE END, PLUS ONE ADDITIONAL PANEL FOR EACH 10° OF DEFLECTION, EVENLY SPACED, BETWEEN THE CURVE ENDS.

PULL POST BRACING ON 1.8 m AND 2.4 m FENCE IS THE SAME AS CORNER BRACING.

A DROP BAR LOCKING DEVICE IS REQUIRED FOR ALL DOUBLE GATE INSTALLATIONS. THE DROP BAR MUST BE ABLE TO BE INSERTED INTO THE CONCRETE BLOCK AT LEAST 150 mm.

ALL CONCRETE IS CLASS "F" OR BETTER.

WHEN FENCE IS LESS THAN 15 m FROM THE EDGE OF A DRIVING LANE, USE A 9.5 mm DIA. GALVANIZED STEEL CABLE IN PLACE OF THE TOP METAL BRACE RAIL.

HEIGHT OF FABRIC, H	WIRE FABRIC ABOVE GROUND	DEPTH OF CONCRETE, D	DEPTH OF POST IN CONC. (MIN.)
2440	25 TO 50	1050	950
1830	25 TO 50	900	800
1525	25 TO 50	900	800
1220	25 TO 50	750	650
915	25 TO 50	750	650

ALL DIMENSIONS ARE MILLIMETERS (mm) UNLESS OTHERWISE NOTED.

DETAILED DRAWING

REFERENCE STANDARD SPEC. SECTION 607

DWG. NO. 607-25

CHAIN LINK FENCE

EFFECTIVE: APRIL 2006

serving you with pride

MONTANA DEPARTMENT OF TRANSPORTATION

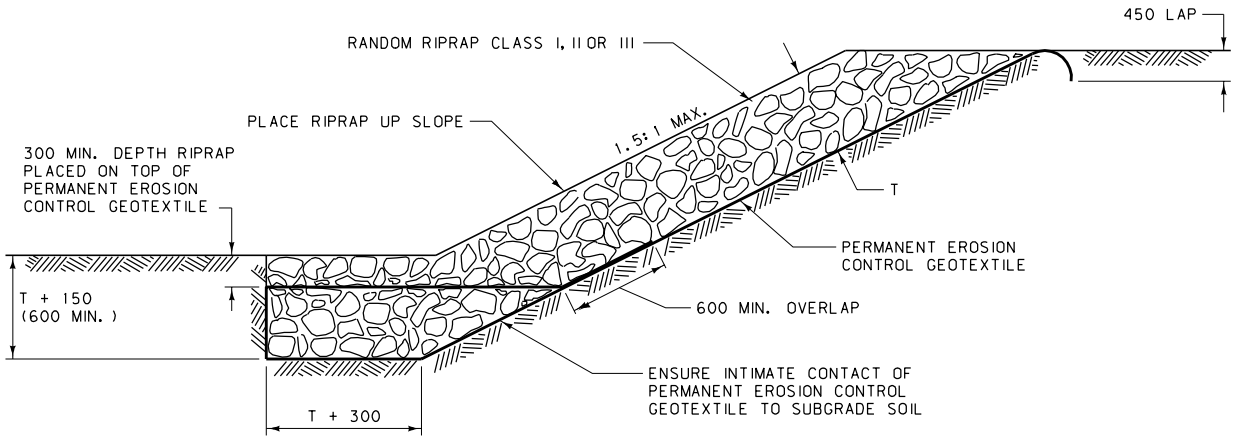

EMBANKMENT PROTECTION

MINIMUM T FOR:
CLASS I RIPRAP = 450
CLASS II RIPRAP = 750
CLASS III RIPRAP = 900

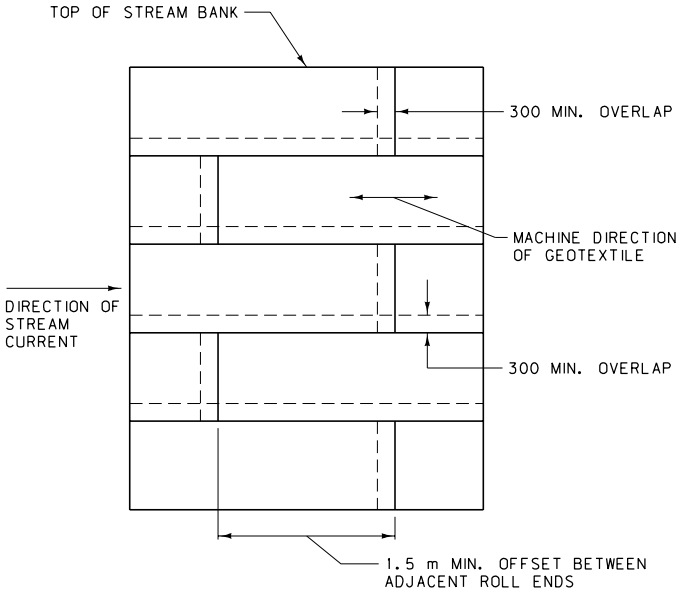

GEOTEXTILE PLACEMENT DETAIL

METHOD FOR PLACING PERMANENT EROSION CONTROL GEOTEXTILE FOR PROTECTION OF SREAM BANKS

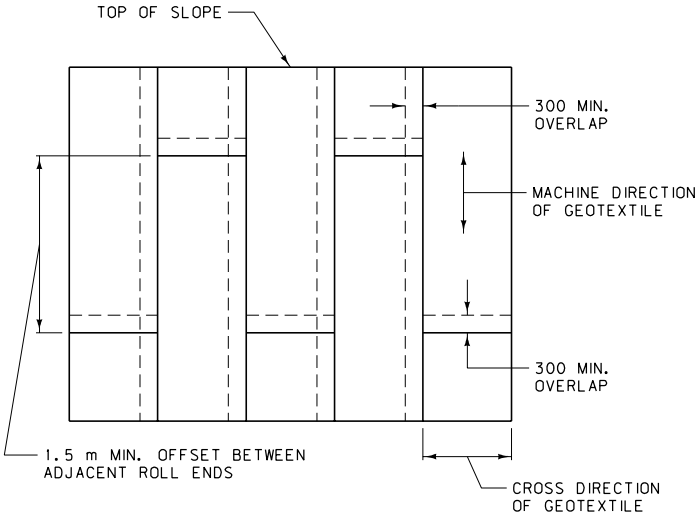

GEOTEXTILE PLACEMENT DETAIL

METHOD FOR PLACING PERMANENT EROSION CONTROL GEOTEXTILE FOR PROTECTION OF CUT AND FILL SLOPES

NOTES:

INSTALL PERMANENT EROSION CONTROL GEOTEXTILE IN ACCORDANCE WITH MANUFACTURER'S SPECIFICATIONS AND MDT STANDARD SPECIFICATIONS SECTION 622.

PROVIDE PERMANENT EROSION CONTROL GEOTEXTILE MEETING MDT STANDARD SPECIFICATIONS SECTION 716.

ALL DIMENSIONS ARE MILLIMETERS (mm) UNLESS OTHERWISE NOTED.

DETAILED DRAWING	
REFERENCE STANDARD SPEC. SECTION 613, 622	DWG. NO. 613-16
EMBANKMENT PROTECTION	
EFFECTIVE: APRIL 2006	
serving you with pride	MONTANA DEPARTMENT OF TRANSPORTATION

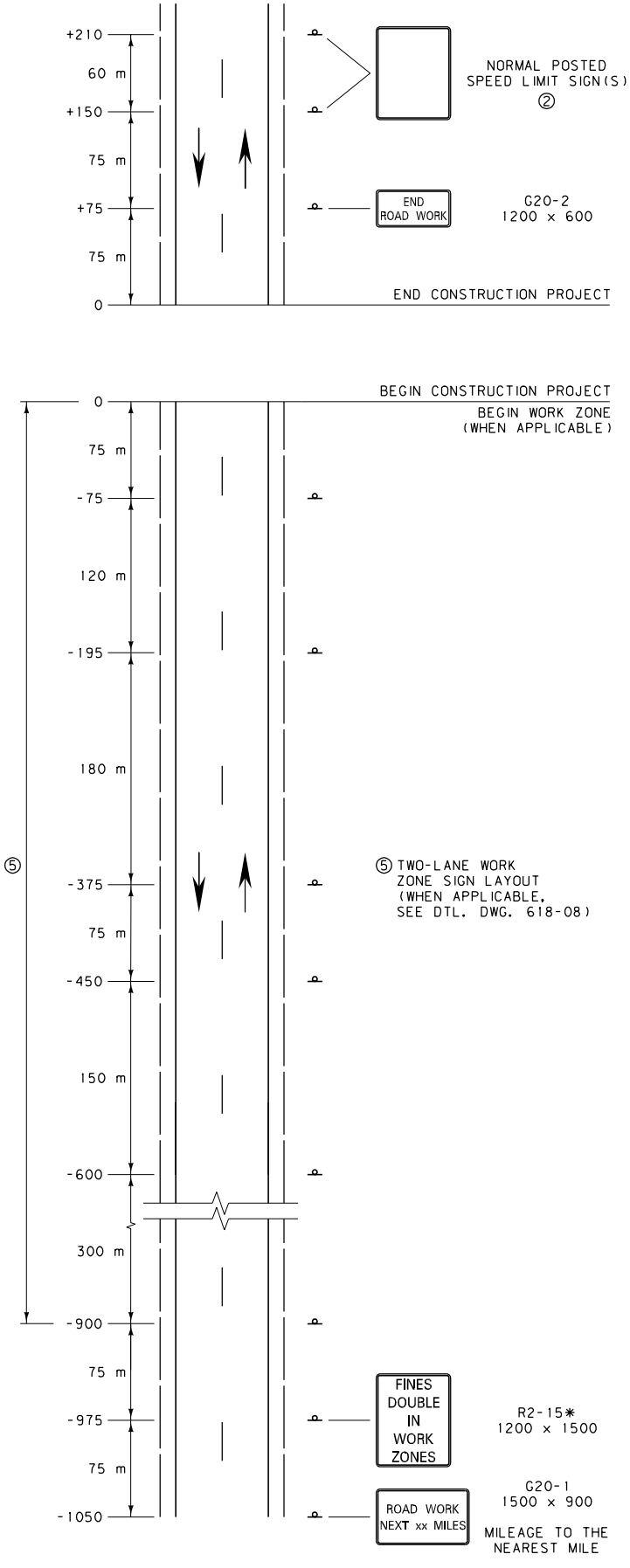

NOTES:

① THIS SIGN LAYOUT IS INTENDED TO BE A PERMANENT INSTALLATION FOR THE DURATION OF THE CONSTRUCTION PROJECT, AS APPROVED BY THE ENGINEER. COVER OR REMOVE ANY SIGNS WHEN NOT IN USE, INCLUDING SPEED LIMIT SIGNS NOT WARRANTED. REMOVE ANY SIGN SUPPORTS IF THEY WILL NOT BE NEEDED WITHIN 90 DAYS.

② POST THE END OF CONSTRUCTION PROJECT SPEED LIMIT CONSISTING OF ONE SIGN WHEN THE NORMAL POSTED SPEED LIMIT FOR ALL VEHICLES IS THE SAME. USE TWO SIGNS WHEN CAR, TRUCK AND NIGHTTIME SPEED LIMITS ARE DIFFERENT.

③ INCLUDE REGULATORY SIGNING ONLY IF THE CONSTRUCTION PROJECT CONTAINS A WORK ZONE OR HAS ROADWAY CONDITIONS THAT WARRANT SPEED RESTRICTIONS. MODIFY REGULATORY SIGNS TO MATCH ADJACENT REGULATIONS.

④ THE WORK ZONE REFERS TO THE AREA WITHIN THE CONSTRUCTION PROJECT WHERE WORK IS ACTUALLY TAKING PLACE.

⑤ IN ADDITION TO THE SIGNS SHOWN, INCLUDE THE APPROPRIATE TWO-LANE WORK ZONE SIGNS (DTL. DWG. NO. 618-08) WHEN A WORK ZONE IS LOCATED AT THE BEGINNING OR END OF THE CONSTRUCTION PROJECT.

⑥ SET UP THIS SIGN LAYOUT IN EACH TRAFFIC DIRECTION.

* DENOTES SIGNS THAT ARE UNIQUE TO MONTANA.

ALL DIMENSIONS ARE MILLIMETERS (mm) UNLESS OTHERWISE NOTED.

DETAILED DRAWING	
REFERENCE STANDARD SPEC. SECTION 618	DWG. NO. 618-04
TWO-LANE CONSTRUCTION PROJECT	
EFFECTIVE: APRIL 2006	

serving you with pride — MONTANA DEPARTMENT OF TRANSPORTATION

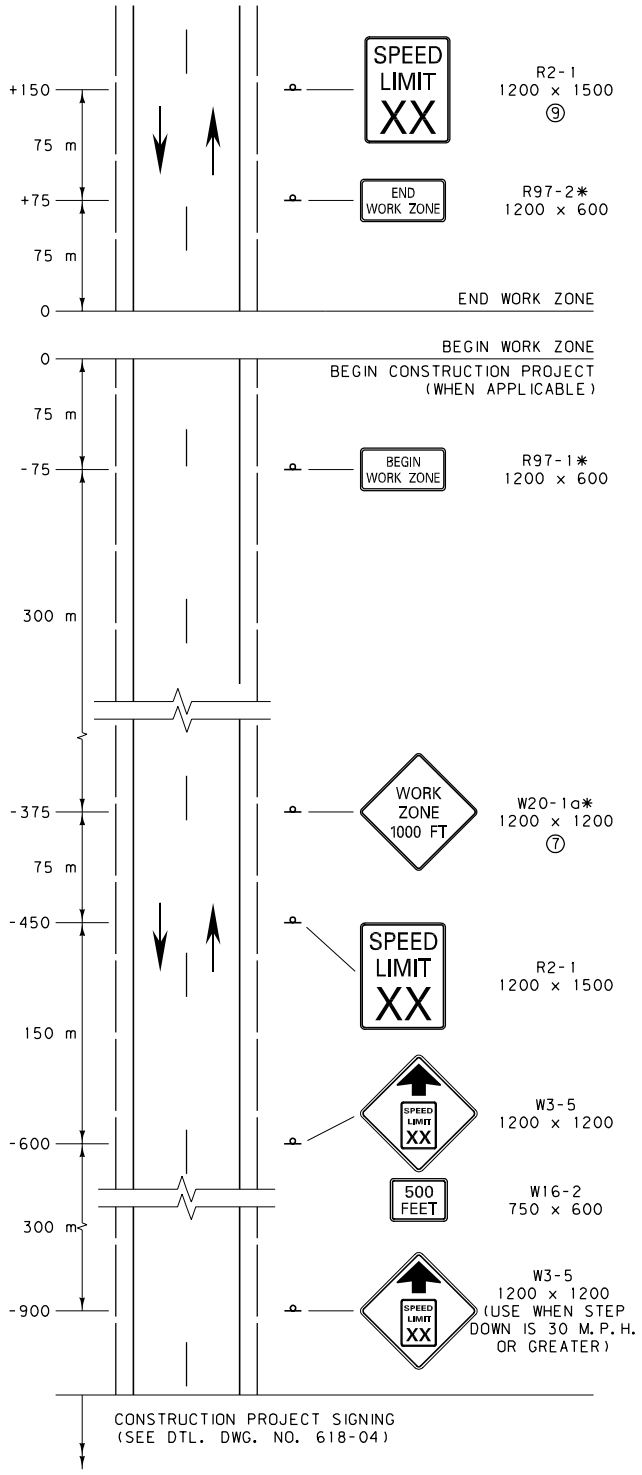

WORK ZONE WITH NO FLAGGER

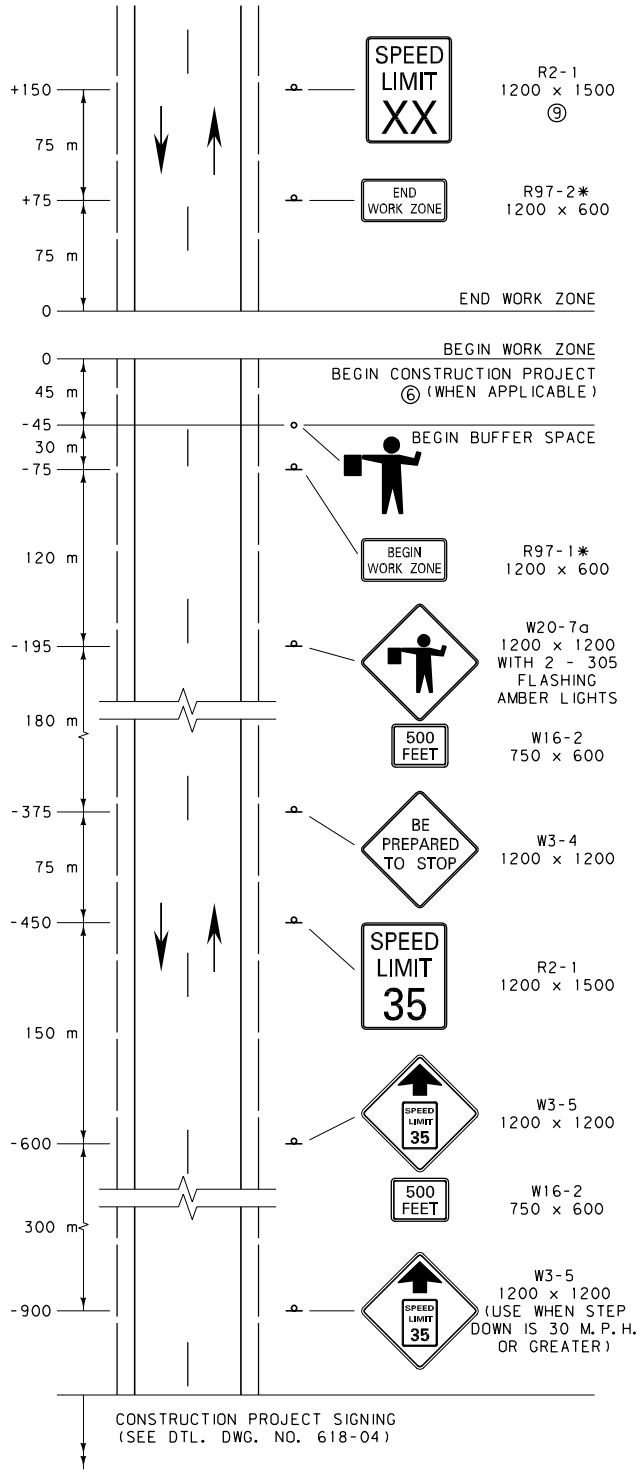

WORK ZONE WITH FLAGGER

NOTES:

① THESE SIGN LAYOUTS WORK IN CONJUNCTION WITH THE PERMANENT LAYOUT ILLUSTRATED ON DTL. DWG. NO. 618-04 FOR WORK ZONES LOCATED AT THE BEGIN AND END OF THE CONSTRUCTION PROJECT.

② XX = SPEED DETERMINED BY THE ENGINEER.

③ INCLUDE REGULATORY SIGNING ONLY IF THERE IS REASON TO RESTRICT SPEED WITHIN THE WORK ZONE. MODIFY REGULATORY SIGNS TO MATCH ADJACENT REGULATIONS.

④ SET UP THIS SIGN LAYOUT IN EACH TRAFFIC DIRECTION. COMBINE SUCCESSIVE WORK ZONES WHEN LESS THAN 1.6 KILOMETERS APART.

⑤ THE WORK ZONE REFERS TO THE AREA WITHIN THE CONSTRUCTION PROJECT WHERE WORK IS ACTUALLY TAKING PLACE.

⑥ THE BUFFER SPACE MAY BE INCREASED FOR DOWNGRADES AND OTHER CONDITIONS THAT AFFECT STOPPING DISTANCE.

⑦ USE MORE SPECIFIC SIGNS, WHERE APPLICABLE, SUCH AS W8-3 "PAVEMENT ENDS."

⑧ PROVIDE A SECOND FLAGGER WHEN REQUIRED BY STANDARD SPECIFICATIONS, SECTION 618.

⑨ POST THE END OF WORK ZONE SPEED LIMIT APPROPRIATE FOR ALL VEHICLES FOR THE REMAINDER OF THE CONSTRUCTION PROJECT BEFORE RESUMING TO NORMAL POSTED SPEED LIMITS AT THE END OF THE CONSTRUCTION PROJECT.

✱ DENOTES SIGNS THAT ARE UNIQUE TO MONTANA.

ALL DIMENSIONS ARE MILLIMETERS (mm) UNLESS OTHERWISE NOTED.

DETAILED DRAWING	
REFERENCE STANDARD SPEC. SECTION 618	DWG. NO. 618-08
TWO-LANE CONSTRUCTION PROJECT WORK ZONES	
EFFECTIVE: APRIL 2006	

MDT serving you with pride — MONTANA DEPARTMENT OF TRANSPORTATION

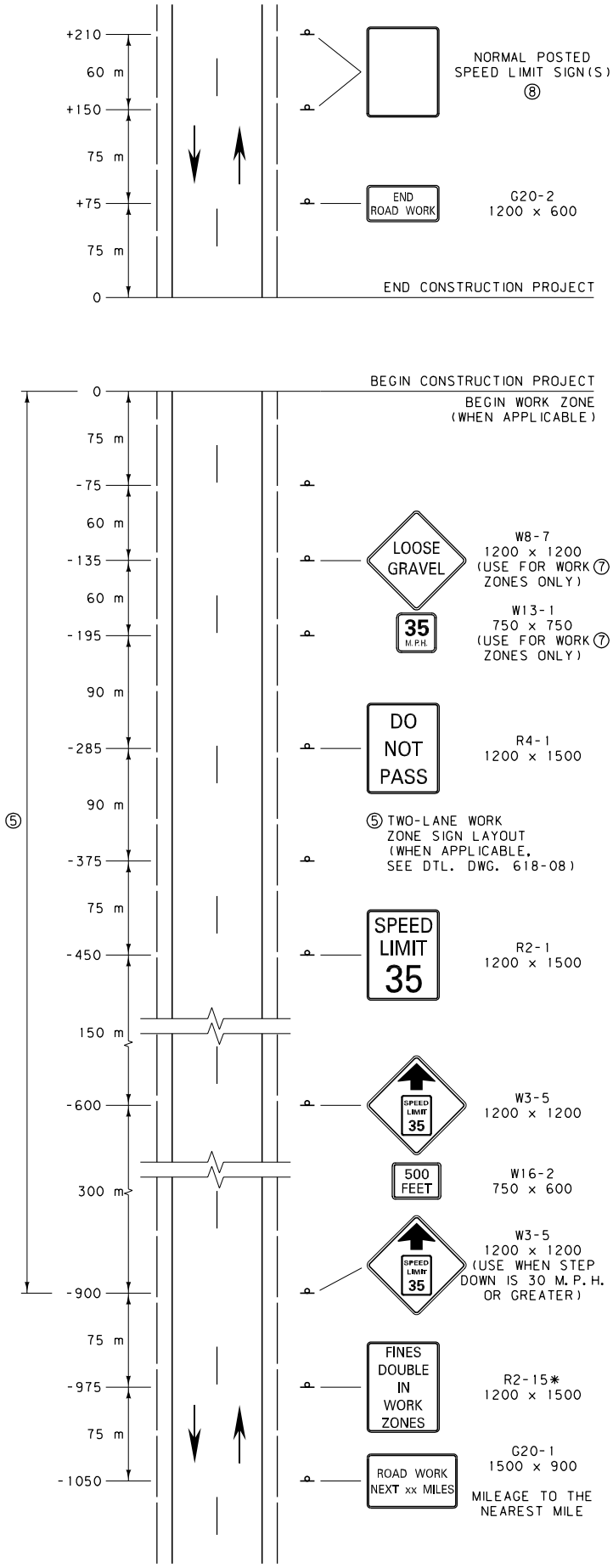

NOTES:

① THIS SIGN LAYOUT WORKS IN CONJUNCTION WITH THE PERMANENT LAYOUT ILLUSTRATED ON DTL. DWG. NO. 618-04. COVER OR REMOVE SIGNS WHEN NOT IN USE, INCLUDING SPEED LIMIT SIGNS NOT WARRANTED.

② INCLUDE REGULATORY SIGNING ONLY IF THERE IS REASON TO RESTRICT SPEED WITHIN THE CONSTRUCTION PROJECT. MODIFY REGULATORY SIGNS TO MATCH ADJACENT REGULATIONS.

③ THE WORK ZONE REFERS TO THE AREA WITHIN THE CONSTRUCTION PROJECT WHERE WORK IS ACTUALLY TAKING PLACE.

④ FOR SEAL COAT WORK ZONE ACTIVITIES, USE THE FLAGGER APPLICATION OF THE WORK ZONE LAYOUT FROM DTL. DWG. NO. 618-08.

⑤ IN ADDITION TO THE SIGNS SHOWN, INCLUDE THE APPROPRIATE TWO-LANE WORK ZONE SIGNS WHEN A WORK ZONE IS LOCATED AT THE BEGINNING OR END OF THE CONSTRUCTION PROJECT.

⑥ SET UP THIS SIGN LAYOUT IN EACH TRAFFIC DIRECTION.

⑦ PLACE THE W8-7 AND W13-1 SIGNS AT THE BEGINING OF EACH WORK ZONE AND AT 3.2 km INTERVALS WITHIN THE WORK ZONES FOR EACH DIRECTION OF TRAVEL.

⑧ POST THE END OF CONSTRUCTION PROJECT SPEED LIMIT CONSISTING OF ONE SIGN WHEN THE NORMAL POSTED SPEED LIMIT FOR ALL VEHICLES IS THE SAME. USE TWO SIGNS WHEN CAR, TRUCK AND NIGHTTIME SPEED LIMITS ARE DIFFERENT.

* DENOTES SIGNS THAT ARE UNIQUE TO MONTANA.

ALL DIMENSIONS ARE MILLIMETERS (mm) UNLESS OTHERWISE NOTED.

DETAILED DRAWING	
REFERENCE STANDARD SPEC. SECTION 618	DWG. NO. 618-10
TWO-LANE CONSTRUCTION PROJECT SEAL COAT	
EFFECTIVE: APRIL 2006	

MDT serving you with pride — MONTANA DEPARTMENT OF TRANSPORTATION

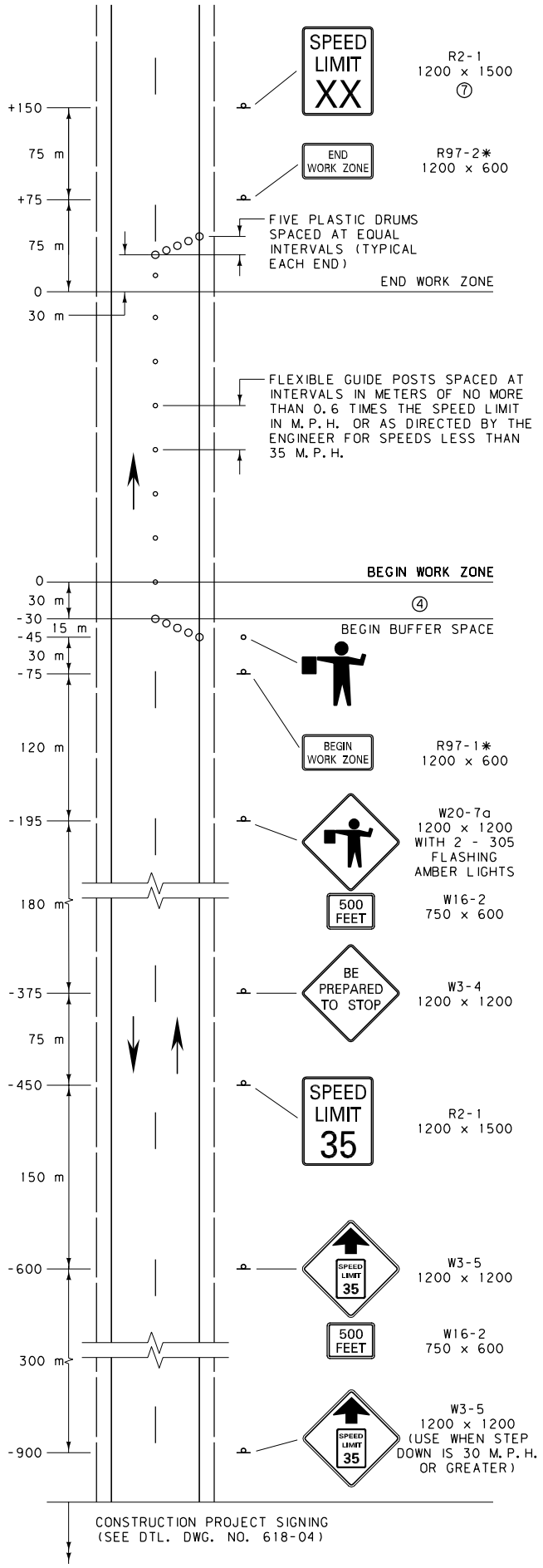

NOTES:

① MODIFY REGULATORY SIGNS TO MATCH ADJACENT REGULATIONS.

② SET UP THIS SIGN LAYOUT IN EACH TRAFFIC DIRECTION.

③ THE WORK ZONE REFERS TO THE AREA WITHIN THE CONSTRUCTION PROJECT WHERE WORK IS ACTUALLY TAKING PLACE.

④ THE BUFFER SPACE MAY BE INCREASED FOR DOWNGRADES AND OTHER CONDITIONS THAT AFFECT STOPPING DISTANCE.

⑤ PROVIDE A SECOND FLAGGER WHEN REQUIRED BY STANDARD SPECIFICATIONS, SECTION 618.

⑥ XX = SPEED DETERMINED BY THE ENGINEER.

⑦ POST THE END OF WORK ZONE SPEED LIMIT APPROPRIATE FOR ALL VEHICLES FOR THE REMAINDER OF THE CONSTRUCTION PROJECT BEFORE RESUMING TO NORMAL POSTED SPEED LIMITS AT THE END OF THE CONSTRUCTION PROJECT.

* DENOTES SIGNS THAT ARE UNIQUE TO MONTANA.

ALL DIMENSIONS ARE MILLIMETERS (mm) UNLESS OTHERWISE NOTED.

DETAILED DRAWING	
REFERENCE STANDARD SPEC. SECTION 618	DWG. NO. 618-12
TWO-LANE CONSTRUCTION PROJECT LANE CLOSURE-FLAGGER CONTROLLED	
EFFECTIVE: APRIL 2006	
serving you with pride	MONTANA DEPARTMENT OF TRANSPORTATION

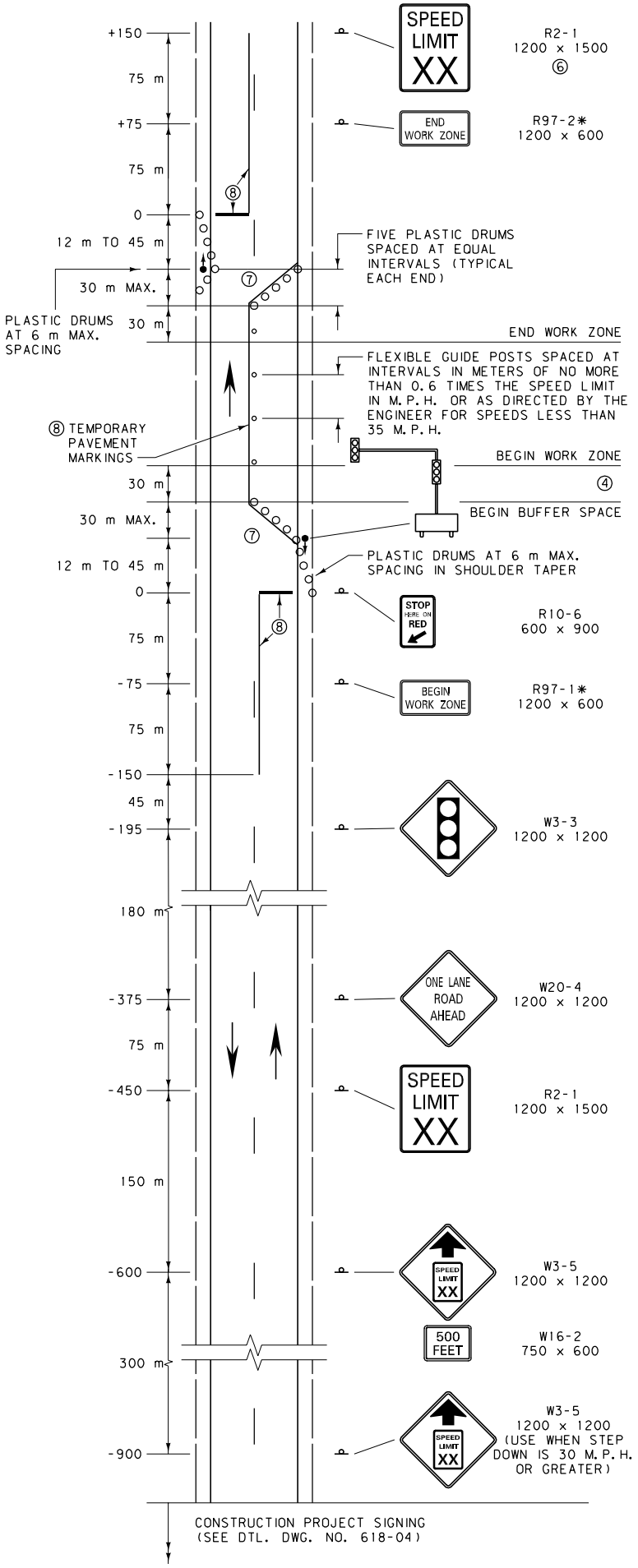

NOTES:

① MODIFY REGULATORY SIGNS TO MATCH ADJACENT REGULATIONS.

② SET UP THIS SIGN LAYOUT IN EACH TRAFFIC DIRECTION.

③ THE WORK ZONE REFERS TO THE AREA WITHIN THE CONSTRUCTION PROJECT WHERE WORK IS ACTUALLY TAKING PLACE.

④ THE BUFFER SPACE MAY BE INCREASED FOR DOWNGRADES AND OTHER CONDITIONS THAT AFFECT STOPPING DISTANCE.

⑤ XX = SPEED DETERMINED BY THE ENGINEER.

⑥ POST THE END OF WORK ZONE SPEED LIMIT APPROPRIATE FOR ALL VEHICLES FOR THE REMAINDER OF THE CONSTRUCTION PROJECT BEFORE RESUMING TO NORMAL POSTED SPEED LIMITS AT THE END OF THE CONSTRUCTION PROJECT.

⑦ REMOVE ANY CONFLICTING PAVEMENT MARKINGS BETWEEN THE STOP LINE AND WORK ZONE BOUNDARY.

⑧ PLACE TEMPORARY PAVEMENT MARKINGS AS SHOWN WHEN ROADWAY SURFACE IS PAVED. (REMOVABLE PAVEMENT MARKINGS MAY BE USED.) UPON REMOVAL OF THE TEMPORARY TRAFFIC CONTROL SIGNALS, REMOVE ALL TEMPORARY PAVEMENT MARKINGS AND RESTORE PERMANENT OR INTERIM PAVEMENT MARKINGS.

⑨ TEMPORARY TRAFFIC CONTROL SIGNALS ARE TO MEET THE PHYSICAL DISPLAY AND OPERATIONAL REQUIREMENTS OF PERMANENT TRAFFIC CONTROL SIGNALS.

⑩ ESTABLISH TEMPORARY TRAFFIC CONTROL SIGNAL TIMING BY CONSULTING WITH AN AUTHORIZED TRAFFIC ENGINEER. ENSURE THAT THE DURATIONS OF RED CLEARANCE INTERVALS ARE ADEQUATE TO CLEAR THE ONE-LANE SECTION OF CONFLICTING VEHICLES. INCORPORATE SAFEGUARDS TO AVOID THE POSSIBILITY OF CONFLICTING SIGNAL INDICATIONS AT EACH END OF THE WORK ZONE.

⑪ INCORPORATE ANY SIDE APPROACH TRAFFIC THAT OCCURS WITHIN THE WORK ZONE BOUNDARIES INTO THE MAINLINE SIGNAL CONTROLLED OPERATION VIA. THE USE OF TEMPORARY TRAFFIC CONTROL SIGNS, DEVICES, ETC.

* DENOTES SIGNS THAT ARE UNIQUE TO MONTANA.

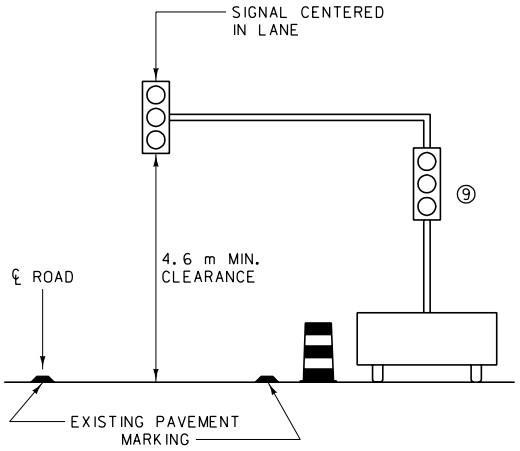

TEMPORARY TRAFFIC CONTROL SIGNAL DETAIL

ALL DIMENSIONS ARE MILLIMETERS (mm) UNLESS OTHERWISE NOTED.

DETAILED DRAWING	
REFERENCE STANDARD SPEC. SECTION 618	DWG. NO. 618-13
TWO-LANE CONSTRUCTION PROJECT LANE CLOSURE-SIGNAL CONTROLLED	
EFFECTIVE: APRIL 2006	
serving you with pride	MONTANA DEPARTMENT OF TRANSPORTATION

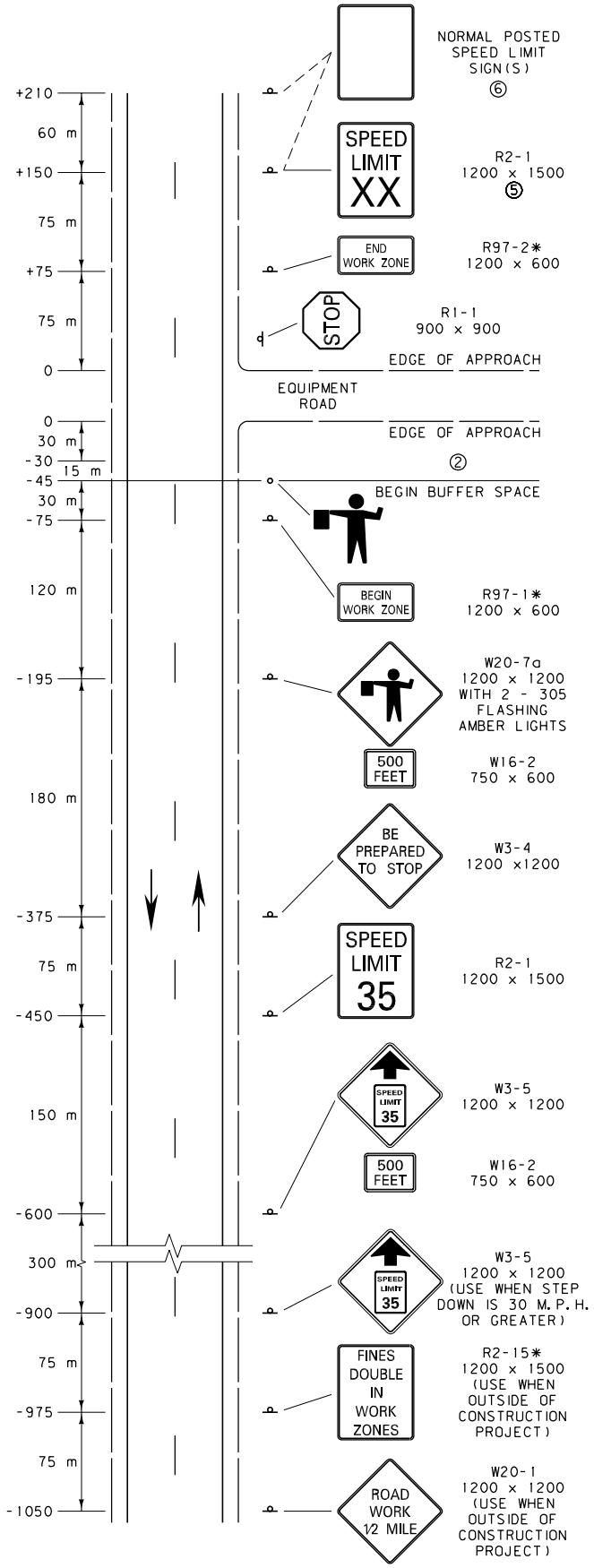

EQUIPMENT ENTRANCE WITH FLAGGER

NOTES:

① SET UP THIS SIGN LAYOUT IN EACH TRAFFIC DIRECTION, AS NEEDED.

② THE BUFFER SPACE MAY BE INCREASED FOR DOWNGRADES AND OTHER CONDITIONS THAT AFFECT STOPPING DISTANCE.

③ XX = SPEED DETERMINED BY THE ENGINEER.

④ THE WORK ZONE REFERS TO THE AREA WHERE WORK IS ACTUALLY TAKING PLACE. WHEN THIS OCCURS OUTSIDE OF A CONSTRUCTION PROJECT INCLUDE THE W20-1 AND R2-15* SIGNS.

⑤ POST THE END OF WORK ZONE SPEED LIIT APPROPRIATE FOR ALL VEHICLES FOR THE REMAINDER OF THE CONSTRUCTION PROJECT BEFORE RESUMING TO NORMAL POSTED SPEED LIMITS AT THE END OF THE CONSTRUCTION PROJECT.

⑥ WHEN OUTSIDE OF A CONSTRUCTION PROJECT, POST THE SPEED LIMIT CONSISTING OF ONE SIGN WHEN THE NORMAL POSTED SPEED LIMIT FOR ALL VEHICLES IS THE SAME. USE TWO SIGNS WHEN CAR, TRUCK AND NIGHTTIME SPEED LIMITS ARE DIFFERENT.

* DENOTES SIGNS THAT ARE UNIQUE TO MONTANA.

ALL DIMENSIONS ARE MILLIMETERS (mm) UNLESS OTHERWISE NOTED.

DETAILED DRAWING	
REFERENCE STANDARD SPEC. SECTION 618	DWG. NO. 618-16
TWO-LANE EQUIPMENT ENTRANCES	
EFFECTIVE: APRIL 2006	

serving you with pride — MONTANA DEPARTMENT OF TRANSPORTATION

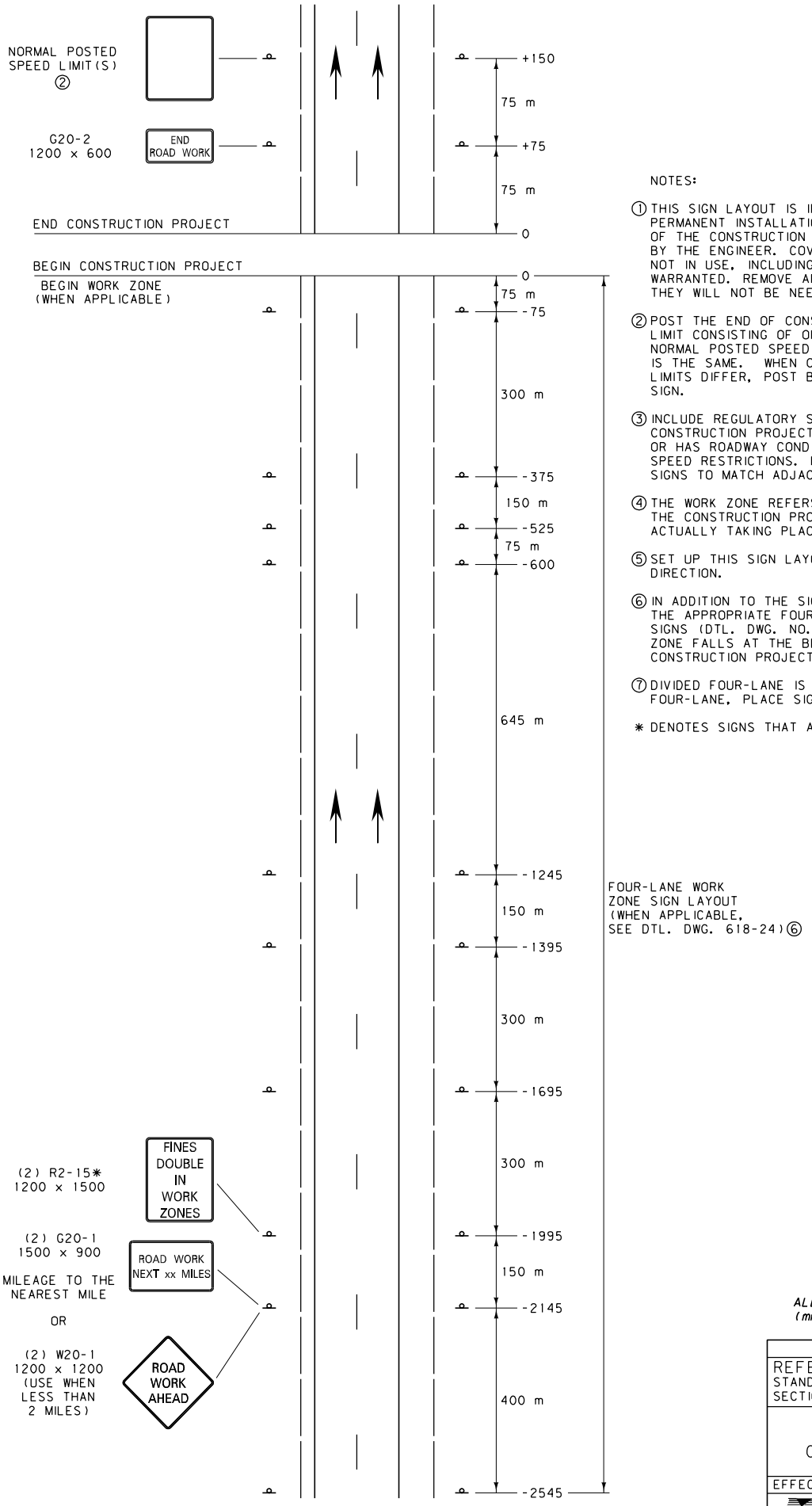

NOTES:

① THIS SIGN LAYOUT IS INTENDED TO BE A PERMANENT INSTALLATION FOR THE DURATION OF THE CONSTRUCTION PROJECT, AS APPROVED BY THE ENGINEER. COVER OR REMOVE SIGNS WHEN NOT IN USE, INCLUDING SPEED LIMIT SIGNS NOT WARRANTED. REMOVE ANY SIGN SUPPORTS IF THEY WILL NOT BE NEEDED WITHIN 90 DAYS.

② POST THE END OF CONSTRUCTION PROJECT SPEED LIMIT CONSISTING OF ONE LIMIT WHEN THE NORMAL POSTED SPEED LIMIT FOR ALL VEHICLES IS THE SAME. WHEN CAR AND TRUCK SPEED LIMITS DIFFER, POST BOTH LIMITS ON A SINGLE SIGN.

③ INCLUDE REGULATORY SIGNING ONLY IF THE CONSTRUCTION PROJECT CONTAINS A WORK ZONE OR HAS ROADWAY CONDITIONS THAT WARRANT SPEED RESTRICTIONS. MODIFY REGULATORY SIGNS TO MATCH ADJACENT REGULATIONS.

④ THE WORK ZONE REFERS TO THE AREA WITHIN THE CONSTRUCTION PROJECT WHERE WORK IS ACTUALLY TAKING PLACE.

⑤ SET UP THIS SIGN LAYOUT IN EACH TRAFFIC DIRECTION.

⑥ IN ADDITION TO THE SIGNS SHOWN, INCLUDE THE APPROPRIATE FOUR-LANE WORK ZONE SIGNS (DTL. DWG. NO. 618-24) WHEN A WORK ZONE FALLS AT THE BEGIN OR END OF THE CONSTRUCTION PROJECT.

⑦ DIVIDED FOUR-LANE IS SHOWN. FOR UN-DIVIDED FOUR-LANE, PLACE SIGNS ON RIGHT SIDE ONLY.

* DENOTES SIGNS THAT ARE UNIQUE TO MONTANA.

ALL DIMENSIONS ARE MILLIMETERS (mm) UNLESS OTHERWISE NOTED.

DETAILED DRAWING	
REFERENCE STANDARD SPEC. SECTION 618	DWG. NO. 618-20
DIVIDED FOUR-LANE CONSTRUCTION PROJECT	
EFFECTIVE: APRIL 2006	

serving you with pride — MONTANA DEPARTMENT OF TRANSPORTATION

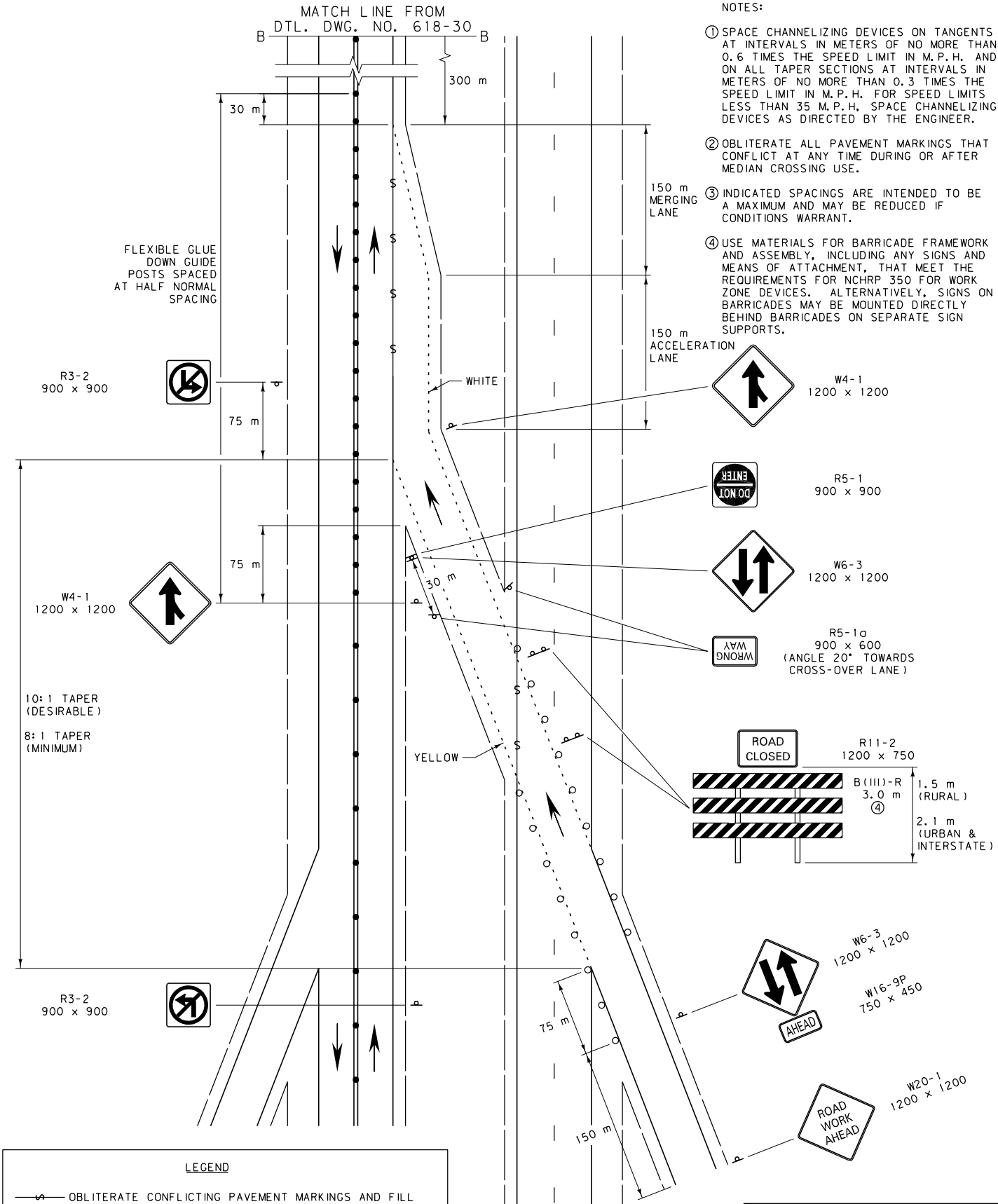

NOTES:

1. SPACE CHANNELIZING DEVICES ON TANGENTS AT INTERVALS IN METERS OF NO MORE THAN 0.6 TIMES THE SPEED LIMIT IN M.P.H. AND ON ALL TAPER SECTIONS AT INTERVALS IN METERS OF NO MORE THAN 0.3 TIMES THE SPEED LIMIT IN M.P.H. FOR SPEED LIMITS LESS THAN 35 M.P.H, SPACE CHANNELIZING DEVICES AS DIRECTED BY THE ENGINEER.
2. OBLITERATE ALL PAVEMENT MARKINGS THAT CONFLICT AT ANY TIME DURING OR AFTER MEDIAN CROSSING USE.
3. INDICATED SPACINGS ARE INTENDED TO BE A MAXIMUM AND MAY BE REDUCED IF CONDITIONS WARRANT.
4. USE MATERIALS FOR BARRICADE FRAMEWORK AND ASSEMBLY, INCLUDING ANY SIGNS AND MEANS OF ATTACHMENT, THAT MEET THE REQUIREMENTS FOR NCHRP 350 FOR WORK ZONE DEVICES. ALTERNATIVELY, SIGNS ON BARRICADES MAY BE MOUNTED DIRECTLY BEHIND BARRICADES ON SEPARATE SIGN SUPPORTS.

LEGEND

- OBLITERATE CONFLICTING PAVEMENT MARKINGS AND FILL ANY EXISTING RUMBLE STRIPS WITH PMS
- PLASTIC DRUMS (SEE NOTES FOR SPACING)
- RAISED RIGID PAVEMENT MARKERS TYPE I OR II AT 1.5 m SPACING
- DOUBLE YELLOW PAINT OR DOUBLE PLASTIC PAVEMENT MARKING TABS AT 1.5 m SPACING
- FLEXIBLE GLUE-DOWN GUIDE POSTS ON TWO-LANE (SEE NOTES FOR SPACING EXCEPT AS SHOWN)

ALL DIMENSIONS ARE MILLIMETERS (mm) UNLESS OTHERWISE NOTED.

DETAILED DRAWING	
REFERENCE STANDARD SPEC. SECTION 618	DWG. NO. 618-21
TEMPORARY ENTRANCE RAMP MEDIAN CROSSING	
EFFECTIVE: APRIL 2006	

MDT serving you with pride — MONTANA DEPARTMENT OF TRANSPORTATION

LEGEND

- —s— OBLITERATE CONFLICTING PAVEMENT MARKINGS AND FILL ANY EXISTING RUMBLE STRIPS WITH PMS
- o PLASTIC DRUMS (SEE NOTES FOR SPACING)
- - - - - - RAISED RIGID PAVEMENT MARKERS TYPE I OR II AT 1.5 m SPACING
- ═══ DOUBLE YELLOW PAINT OR DOUBLE PLASTIC PAVEMENT MARKING TABS AT 1.5 m SPACING
- ● FLEXIBLE GLUE-DOWN GUIDE POSTS ON TWO-LANE (SEE NOTES FOR SPACING EXCEPT AS SHOWN)

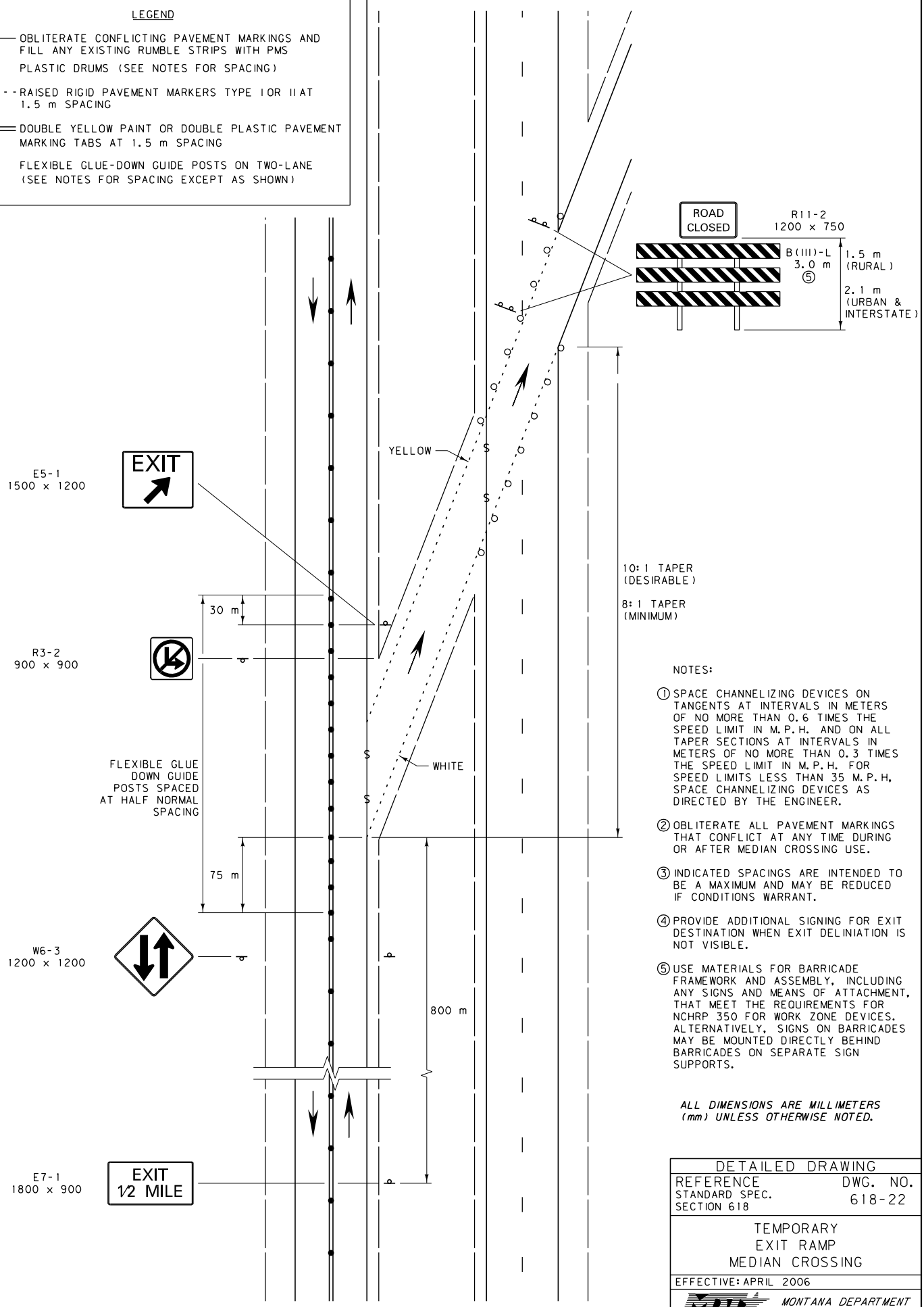

NOTES:

① SPACE CHANNELIZING DEVICES ON TANGENTS AT INTERVALS IN METERS OF NO MORE THAN 0.6 TIMES THE SPEED LIMIT IN M.P.H. AND ON ALL TAPER SECTIONS AT INTERVALS IN METERS OF NO MORE THAN 0.3 TIMES THE SPEED LIMIT IN M.P.H. FOR SPEED LIMITS LESS THAN 35 M.P.H, SPACE CHANNELIZING DEVICES AS DIRECTED BY THE ENGINEER.

② OBLITERATE ALL PAVEMENT MARKINGS THAT CONFLICT AT ANY TIME DURING OR AFTER MEDIAN CROSSING USE.

③ INDICATED SPACINGS ARE INTENDED TO BE A MAXIMUM AND MAY BE REDUCED IF CONDITIONS WARRANT.

④ PROVIDE ADDITIONAL SIGNING FOR EXIT DESTINATION WHEN EXIT DELINIATION IS NOT VISIBLE.

⑤ USE MATERIALS FOR BARRICADE FRAMEWORK AND ASSEMBLY, INCLUDING ANY SIGNS AND MEANS OF ATTACHMENT, THAT MEET THE REQUIREMENTS FOR NCHRP 350 FOR WORK ZONE DEVICES. ALTERNATIVELY, SIGNS ON BARRICADES MAY BE MOUNTED DIRECTLY BEHIND BARRICADES ON SEPARATE SIGN SUPPORTS.

ALL DIMENSIONS ARE MILLIMETERS (mm) UNLESS OTHERWISE NOTED.

DETAILED DRAWING	
REFERENCE STANDARD SPEC. SECTION 618	DWG. NO. 618-22
TEMPORARY EXIT RAMP MEDIAN CROSSING	
EFFECTIVE: APRIL 2006	

MDT serving you with pride — MONTANA DEPARTMENT OF TRANSPORTATION

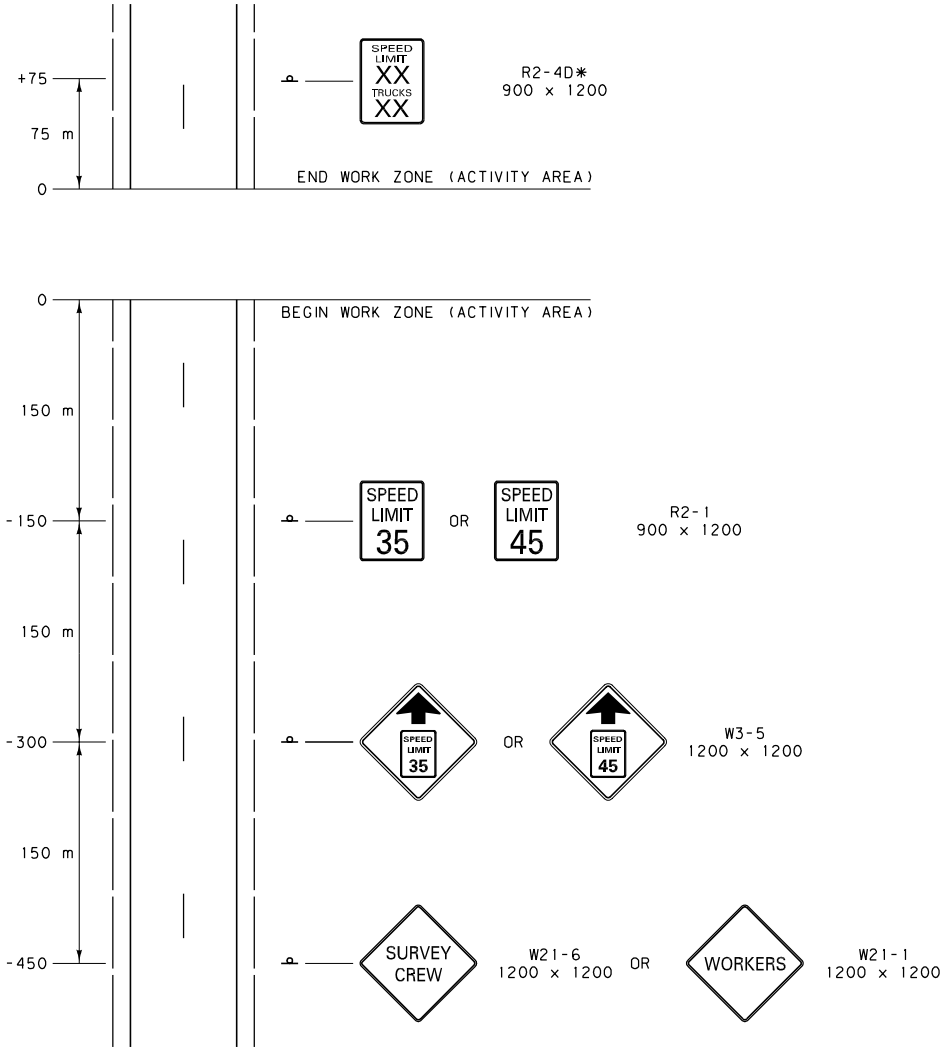

NOTES:

1. SHORT DURATION ACTIVITIES ARE DEFINED AS THOSE LASTING UP TO ONE HOUR.
2. USE THIS SIGN LAYOUT WHEN WORK IS TO TAKE PLACE ON THE TRAVELED WAY. SIGNING FOR WORK ON OR NEAR THE SHOULDER MAY BE LIMITED TO THE USE OF ONE 1200 mm WARNING SIGN FOR EACH TRAVEL DIRECTION. SIGNING FOR WORK OUTSIDE THE SHOULDER MAY BE LIMITED TO THE USE OF ONE 1200 mm WARNING SIGN FOR THE TRAVEL DIRECTION ADJACENT TO THE WORK.
3. SIGN BOTH TRAVEL DIRECTIONS ON TWO-LANE, TWO-WAY ROADWAYS OR BOTH SHOULDERS ON TWO-LANE, ONE-WAY ROADWAYS.
4. PROVIDE AT LEAST THE DISTANCE SHOWN FOR DELINEATOR MOUNTED SIGNS.
5. SEE DTL. DWG. NO. 618-36 "SHORT-TERM STATIONARY CREW SIGNING" IF THE DOUBLE PENALTY REGULATION IS TO BE UTILIZED.
6. XX = NORMAL POSTED SPEED LIMIT(S).

* DENOTES SIGNS THAT ARE UNIQUE TO MONTANA.

ALL DIMENSIONS ARE MILLIMETERS (mm) UNLESS OTHERWISE NOTED.

DETAILED DRAWING	
REFERENCE STANDARD SPEC. SECTION 618	DWG. NO. 618-34
SHORT DURATION CREW SIGNING	
EFFECTIVE: APRIL 2006	
serving you with pride	MONTANA DEPARTMENT OF TRANSPORTATION

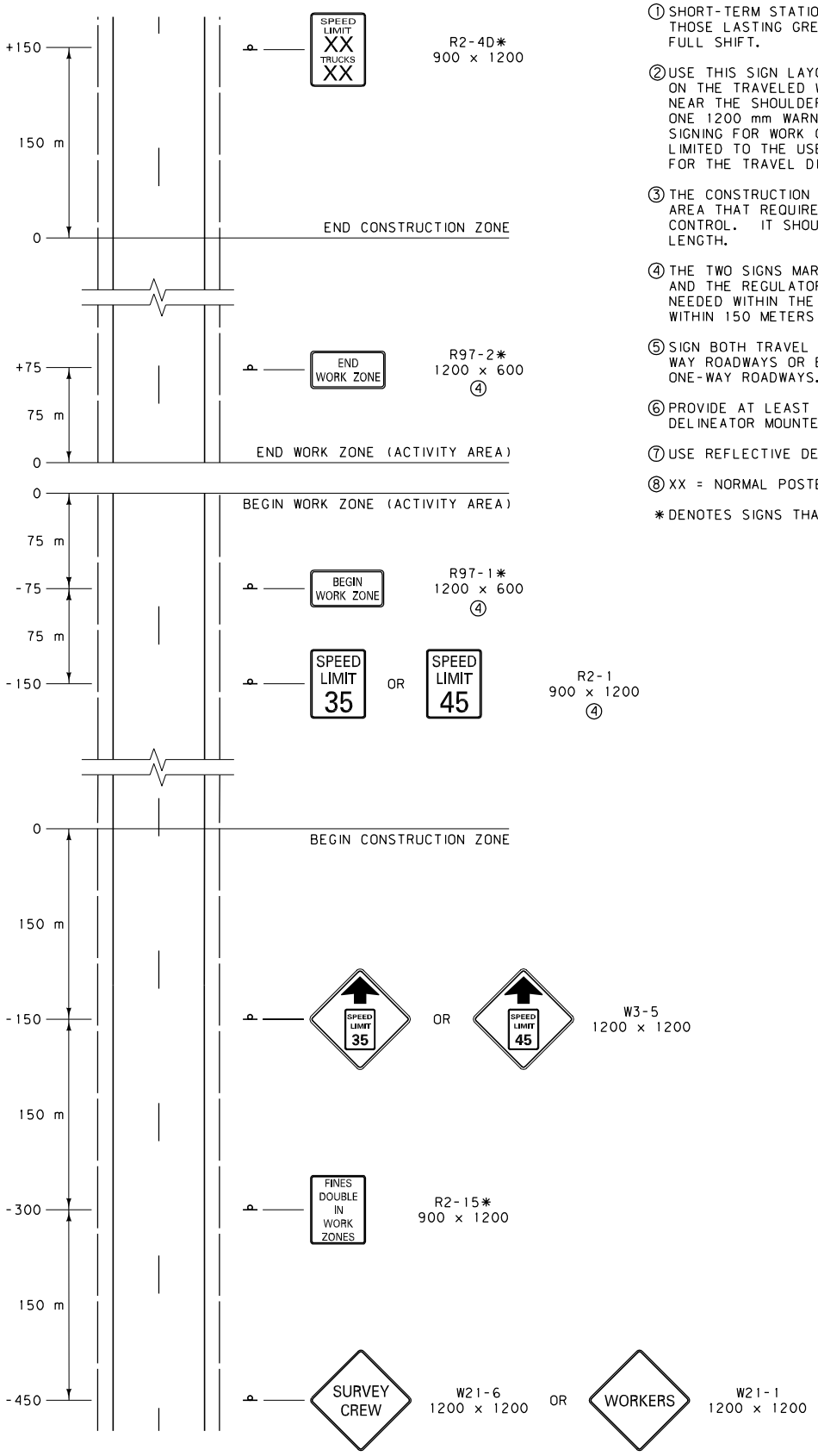

NOTES:

① SHORT-TERM STATIONARY ACTIVITIES ARE DEFINED AS THOSE LASTING GREATER THAN ONE HOUR, UP TO A FULL SHIFT.

② USE THIS SIGN LAYOUT WHEN WORK IS TO TAKE PLACE ON THE TRAVELED WAY. SIGNING FOR WORK ON OR NEAR THE SHOULDER MAY BE LIMITED TO THE USE OF ONE 1200 mm WARNING SIGN FOR EACH TRAVEL DIRECTION. SIGNING FOR WORK OUTSIDE THE SHOULDER MAY BE LIMITED TO THE USE OF ONE 1200 mm WARNING SIGN FOR THE TRAVEL DIRECTION ADJACENT TO THE WORK.

③ THE CONSTRUCTION ZONE REFERS TO THE GENERAL AREA THAT REQUIRES TEMPORARY WORK ZONE TRAFFIC CONTROL. IT SHOULD NOT EXCEED 4.8 KILOMETERS IN LENGTH.

④ THE TWO SIGNS MARKING THE WORK ZONE BOUNDARIES AND THE REGULATORY SPEED SIGN MUST MOVE AS NEEDED WITHIN THE CONSTRUCTION ZONE TO REMAIN WITHIN 150 METERS OF THE WORK ACTIVITY.

⑤ SIGN BOTH TRAVEL DIRECTIONS ON TWO-LANE, TWO-WAY ROADWAYS OR BOTH SHOULDERS ON TWO-LANE, ONE-WAY ROADWAYS.

⑥ PROVIDE AT LEAST THE DISTANCE SHOWN FOR DELINEATOR MOUNTED SIGNS.

⑦ USE REFLECTIVE DEVICES.

⑧ XX = NORMAL POSTED SPEED LIMIT(S).

* DENOTES SIGNS THAT ARE UNIQUE TO MONTANA.

ALL DIMENSIONS ARE MILLIMETERS (mm) UNLESS OTHERWISE NOTED.

DETAILED DRAWING	
REFERENCE STANDARD SPEC. SECTION 618	DWG. NO. 618-36
SHORT-TERM STATIONARY CREW SIGNING	
EFFECTIVE: APRIL 2006	
serving you with pride	MONTANA DEPARTMENT OF TRANSPORTATION

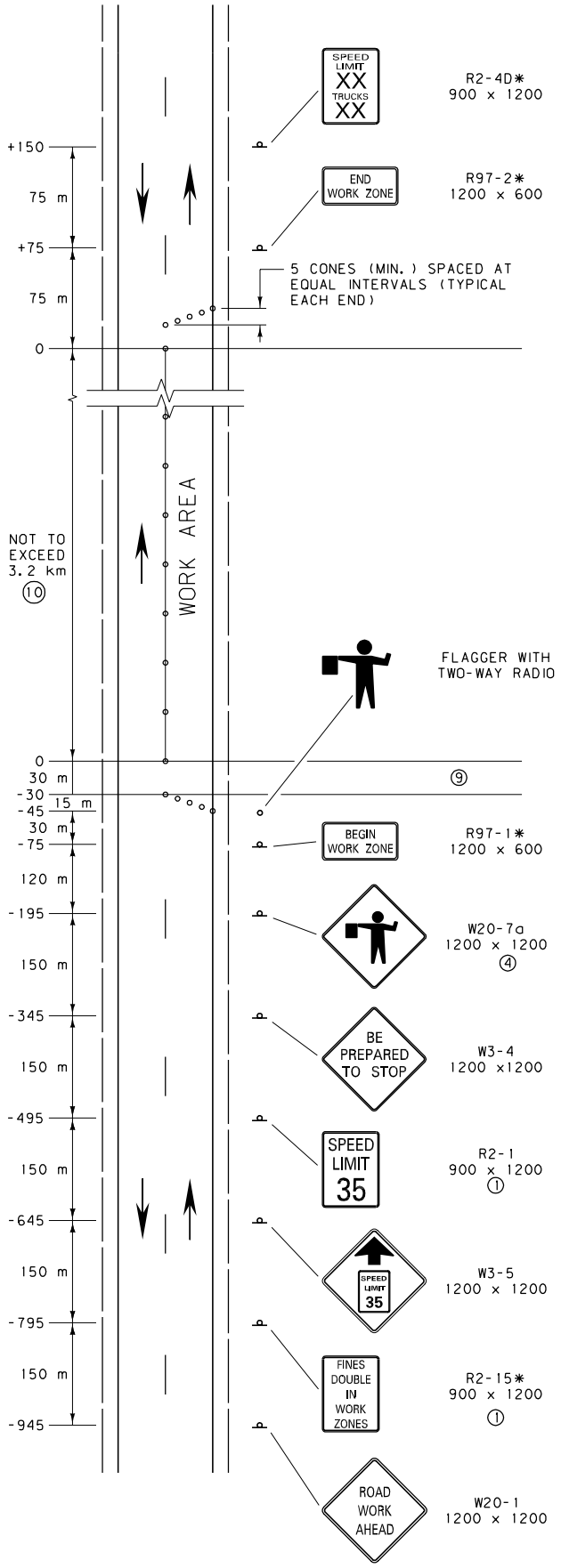

NOTES:

1. MINIMUM REGULATORY SIGN SIZE IS 600 mm x 750 mm ON TWO-LANE ROADS.
2. ON ROADWAYS WITH HIGH TRAFFIC VOLUMES OR VISIBILITY RESTRICTIONS, A 150 m SPACING FOR ALL SIGNS IS RECOMMENDED.
3. SPACE CHANNELIZING DEVICES AT INTERVALS IN METERS OF 0.6 TIMES THE SPEED LIMIT IN M.P.H. THROUGH THE BUFFER AND WORK AREA.
4. IF A NEED ARISES TO INCREASE VEHICLE STORAGE, ADD AN ADDITIONAL W20-7a "FLAGGER AHEAD" SIGN BETWEEN THE R2-1 AND W3-4 SIGNS AND/OR CONSIDER AN ADDITIONAL ADVANCE FLAGGER.
5. A MIRROR IMAGE OF THIS SIGN SEQUENCE IS REQUIRED FOR THE TRAFFIC FROM THE OPPOSITE DIRECTION.
6. FOR MORE INFORMATION OR CLARIFICATION CONTACT THE DISTRICT TRAFFIC ENGINEER. FOR EXAMPLE, IF WORK ZONE IS CLOSE TO A HORIZONTAL CURVE, A VERTICAL CURVE, A BRIDGE, INTERCHANGE, POOR SIGHT DISTANCE, OR OTHER SPECIAL CONDITION.
7. COVER ANY CONFLICTING SIGNS IN THE WORK ZONE.
8. SHORT-TERM WORK ZONE SIGNING IS NOT REQUIRED TO BE POST MOUNTED.
9. THE BUFFER SPACE CAN BE LATERAL AND LONGITUDINAL AND MAY BE INCREASED FOR DOWNGRADES AND OTHER CONDITIONS THAT AFFECT STOPPING DISTANCE.
10. TYPICALLY 3.2 KILOMETERS IS THE MAX. WORK AREA. HOWEVER, WHEN SIGHT DISTANCE, BUFFER ZONES OR ACCOMPLISHMENT RATES FOR EQUIPMENT ARE CONSIDERED, SOME MINOR ADJUSTMENTS TO THIS MAX. MAY BE CONSIDERED.
11. XX = NORMAL POSTED SPEED LIMIT(S).

* DENOTES SIGNS THAT ARE UNIQUE TO MONTANA.

ALL DIMENSIONS ARE MILLIMETERS (mm) UNLESS OTHERWISE NOTED.

DETAILED DRAWING	
REFERENCE STANDARD SPEC. SECTION 618	DWG. NO. 618-M1
MAINTENANCE GUIDELINE FOR SHORT-TERM TWO-LANE CRACK SEALING WORK ZONE	
EFFECTIVE: APRIL 2006	
serving you with pride	MONTANA DEPARTMENT OF TRANSPORTATION

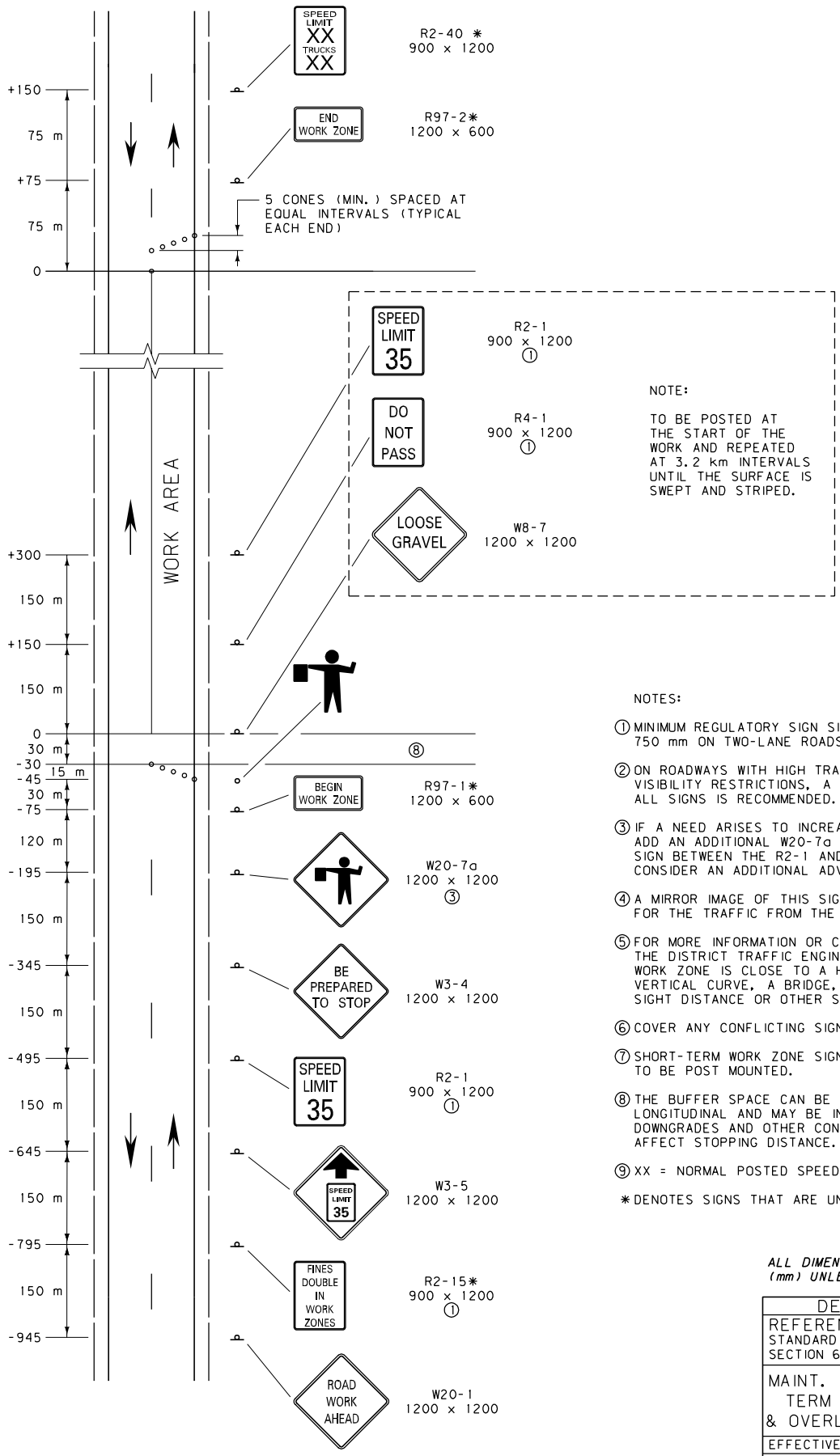

NOTES:

① MINIMUM REGULATORY SIGN SIZE IS 600 mm x 750 mm ON TWO-LANE ROADS.

② ON ROADWAYS WITH HIGH TRAFFIC VOLUMES OR VISIBILITY RESTRICTIONS, A 150 m SPACING FOR ALL SIGNS IS RECOMMENDED.

③ IF A NEED ARISES TO INCREASE VEHICLE STORAGE, ADD AN ADDITIONAL W20-7a "FLAGGER AHEAD" SIGN BETWEEN THE R2-1 AND W3-4 SIGNS AND/OR CONSIDER AN ADDITIONAL ADVANCE FLAGGER.

④ A MIRROR IMAGE OF THIS SIGN SEQUENCE IS REQUIRED FOR THE TRAFFIC FROM THE OPPOSITE DIRECTION.

⑤ FOR MORE INFORMATION OR CLARIFICATION CONTACT THE DISTRICT TRAFFIC ENGINEER. FOR EXAMPLE, IF WORK ZONE IS CLOSE TO A HORIZONTAL CURVE, A VERTICAL CURVE, A BRIDGE, INTERCHANGE, POOR SIGHT DISTANCE OR OTHER SPECIAL CONDITION.

⑥ COVER ANY CONFLICTING SIGNS IN THE WORK ZONE.

⑦ SHORT-TERM WORK ZONE SIGNING IS NOT REQUIRED TO BE POST MOUNTED.

⑧ THE BUFFER SPACE CAN BE LATERAL AND LONGITUDINAL AND MAY BE INCREASED FOR DOWNGRADES AND OTHER CONDITIONS THAT AFFECT STOPPING DISTANCE.

⑨ XX = NORMAL POSTED SPEED LIMIT(S).

✱ DENOTES SIGNS THAT ARE UNIQUE TO MONTANA.

ALL DIMENSIONS ARE MILLIMETERS (mm) UNLESS OTHERWISE NOTED.

DETAILED DRAWING	
REFERENCE STANDARD SPEC. SECTION 618	DWG. NO. 618-M2
MAINT. GUIDELINE FOR SHORT-TERM TWO-LANE CHIP SEAL & OVERLAY (PILOTED TRAFFIC)	
EFFECTIVE: APRIL 2006	
serving you with pride	MONTANA DEPARTMENT OF TRANSPORTATION

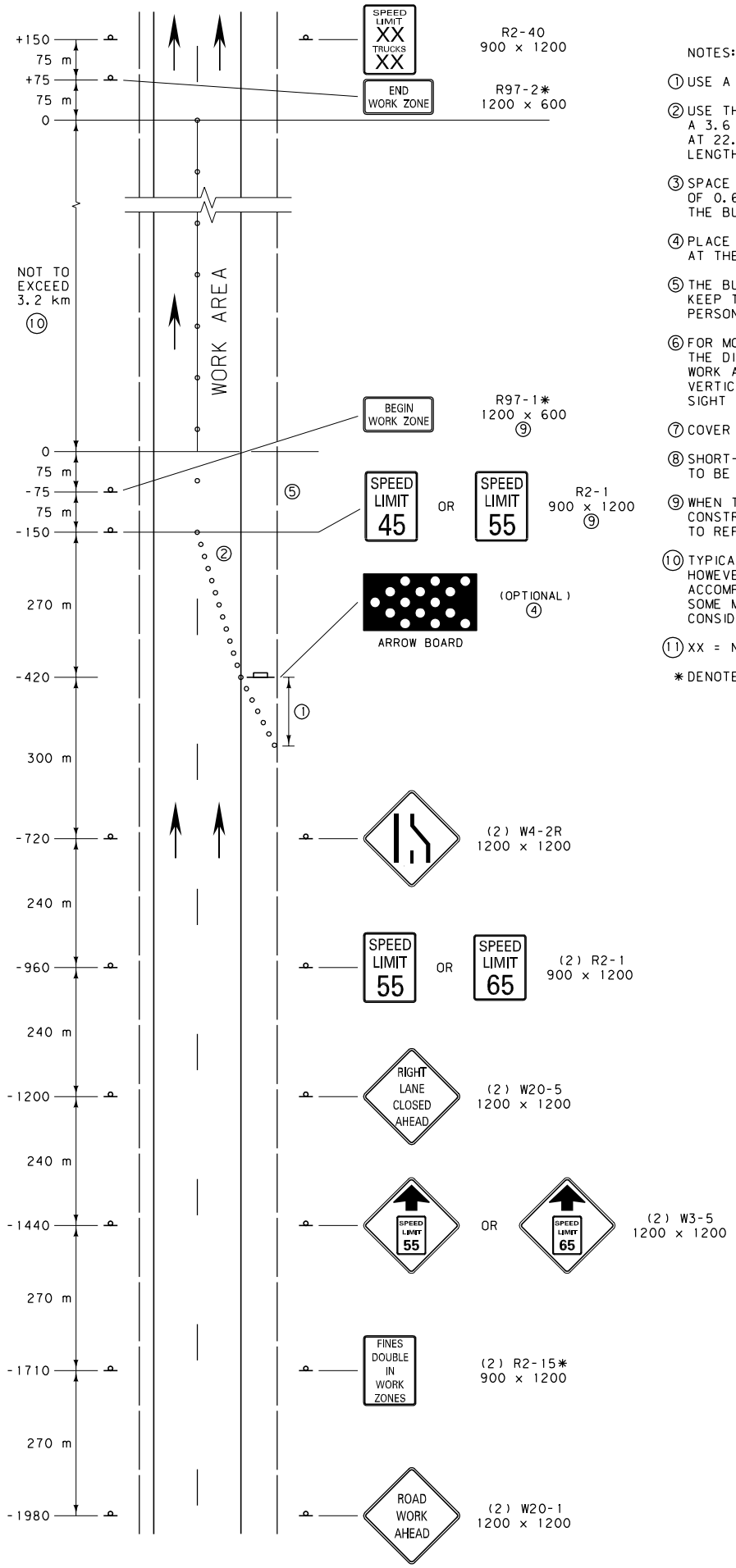

NOTES:

① USE A MINIMUM 90 m SHOULDER TAPER.

② USE THIRTEEN APPROVED CHANNELIZING DEVICES FOR A 3.6 m LANE CLOSURE TAPER (75 M.P.H. SPACED AT 22.5 m.) ASSURE THAT THE TAPER IS A MINIMUM LENGTH OF 270 m.

③ SPACE CHANNELIZING DEVICES AT INTERVALS IN METERS OF 0.6 TIMES THE SPEED LIMIT IN M.P.H. THROUGH THE BUFFER AND WORK AREA.

④ PLACE THE ARROW BOARD (IF USED) ON THE SHOULDER AT THE START OF THE TRAVEL LANE CLOSURE TAPER.

⑤ THE BUFFER SPACE CAN BE LATERAL AND LONGITUDINAL. KEEP THE BUFFER SPACE CLEAR OF EQUIPMENT AND PERSONNEL.

⑥ FOR MORE INFORMATION OR CLARIFICATION CONTACT THE DISTRICT TRAFFIC ENGINEER. FOR EXAMPLE, IF WORK AREA IS CLOSE TO A HORIZONTAL CURVE, A VERTICAL CURVE, A BRIDGE, INTERCHANGE, POOR SIGHT DISTANCE OR OTHER SPECIAL CONDITION.

⑦ COVER ANY CONFLICTING SIGNS IN THE WORK AREA.

⑧ SHORT-TERM WORK ZONE SIGNING IS NOT REQUIRED TO BE POST MOUNTED.

⑨ WHEN THE WORK ZONE CHANGES WITHIN THE CONSTRUCTION ZONE THESE SIGNS SHOULD BE MOVED TO REFLECT THE ACTUAL WORK ZONE.

⑩ TYPICALLY 3.2 KILOMETERS IS THE MAX. WORK AREA. HOWEVER, WHEN SIGHT DISTANCE, BUFFER ZONES OR ACCOMPLISHMENT RATES FOR EQUIPMENT ARE CONSIDERED, SOME MINOR ADJUSTMENTS TO THIS MAX. MAY BE CONSIDERED.

⑪ XX = NORMAL POSTED SPEED LIMIT(S).

* DENOTES SIGNS THAT ARE UNIQUE TO MONTANA.

ALL DIMENSIONS ARE MILLIMETERS (mm) UNLESS OTHERWISE NOTED.

DETAILED DRAWING	
REFERENCE STANDARD SPEC. SECTION 618	DWG. NO. 618-M3
MAINTENANCE GUIDELINE FOR SHORT-TERM LANE CLOSURE ON INTERSTATE	
EFFECTIVE: APRIL 2006	
serving you with pride	MONTANA DEPARTMENT OF TRANSPORTATION

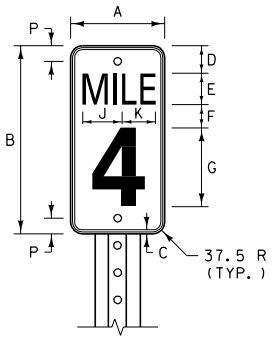

D10-1 AND D10-4

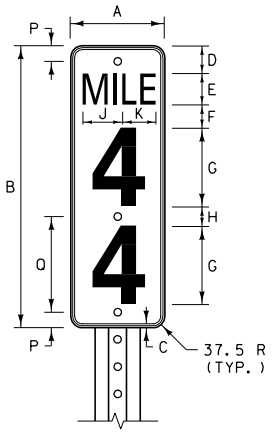

D10-2 AND D10-5

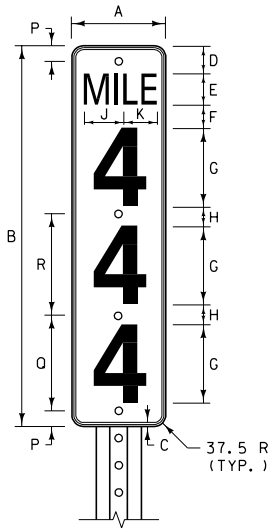

D10-3 AND D10-6

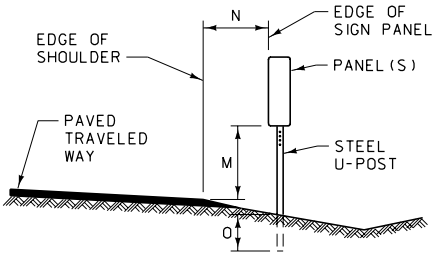

DIMENSION	INTERSTATE	NON-INTERSTATE
M	1.2 m	1.2 m
N	1.8 m	0.6 m TO 1.8 m ✱
O	0.9 m MIN.	0.9 m MIN.

✱ NORMALLY IN LINE WITH DELINEATORS

TYPICAL PLACEMENT

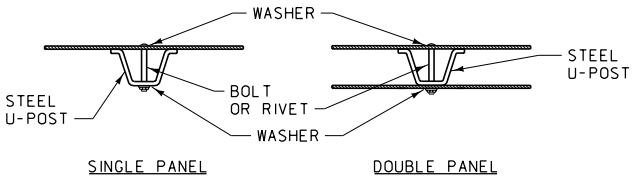

TYPICAL PANEL MOUNTING

PANEL DIMENSION INFORMATION

INTERSTATE			
DIMENSION	D10-4 (1 DIGIT)	D10-5 (2 DIGIT)	D10-6 (3 DIGIT)
A	300	300	300
B	600	900	1200
C	12.5	12.5	12.5
D	87.5	75	75
E	100 SERIES "C"	100 SERIES "C"	100 SERIES "C"
F	75	75	75
G ⊛	250 SERIES "C"	250 SERIES "C"	250 SERIES "C"
H	~	75	62.5
J	115	115	115
K	120	120	120
P	50	50	50
Q	~	325	300
R	~	~	325

NON-INTERSTATE			
DIMENSION	D10-1 (1 DIGIT)	D10-2 (2 DIGIT)	D10-3 (3 DIGIT)
A	250	250	250
B	450	675	900
C	12.5	12.5	12.5
D	50	50	50
E	100 SERIES "B"	100 SERIES "B"	100 SERIES "B"
F	50	50	50
G ⊛	150 SERIES "C"	150 SERIES "C"	150 SERIES "C"
H	~	75	75
J	90	90	90
K	95	95	95
P	37.5	37.5	37.5
Q	~	250	250
R	~	~	225

⊛ OPTICALLY CENTER DIGITS ON VERTICAL ℄ OF PANEL.

NOTES:

REFERENCE POST PANELS CONSIST OF A RETRO-REFLECTORIZED WHITE LEGEND AND BORDER ON A RETRO-REFLECTORIZED GREEN BACKGROUND.

MOUNT ALL REFERENCE POSTS ON STEEL U-POSTS (MIN. 3 kg/m) EXCEPT THE D10-6, WHICH IS MOUNTED ON A STEEL U-POST (MIN. 4.5 kg/m) AS NOTED IN THE SIGNING PLANS.

USE GALVANIZED OR CADMIUM PLATED M8 BOLT, NUT AND WASHER, AND JAM THREADS AFTER TIGHTENING. USE 8 mm DIA. ALUMINUM OR CADMIUM PLATED BOLT RIVETS OR PAINT RIVET HEADS WITH BRILLIANT GREEN SIGN ENAMEL.

DO NOT RELOCATE OR MOVE A REFERENCE POST ONCE IT HAS BEEN PROPERLY PLACED.

ALL DIMENSIONS ARE MILLIMETERS (mm) UNLESS OTHERWISE NOTED.

DETAILED DRAWING

REFERENCE
STANDARD SPEC.
SECTION 619

DWG. NO.
619-32

REFERENCE POST DETAILS

EFFECTIVE: APRIL 2006

MDT serving you with pride

MONTANA DEPARTMENT OF TRANSPORTATION

DESIGN A USAGE:

USE FOR CONTINUOUS DELINEATION AND RT. SHOULDER OF ALL ROUTES.

DESIGN H USAGE:

USE ON LT. SHOULDER OF INTERSTATE ROUTES.

DESIGN B USAGE:

USE ON LT. SHOULDER OF INTERSTATE RAMPS.

DESIGN G USAGE:

USE ON RT. SHOULDER OF INTERSTATE RAMPS.

DESIGN J USAGE:

USE FOR TRUCK ESCAPE RAMPS ONLY.

DESIGN C USAGE:

USE FOR CURVES WITH RADII 170 m OR LESS, BOTH OUTSIDE AND INSIDE OF CURVE.

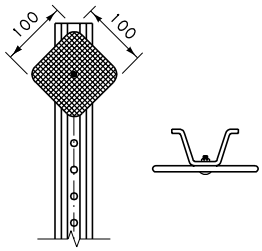

DESIGN A (WHITE)
DESIGN H (YELLOW)

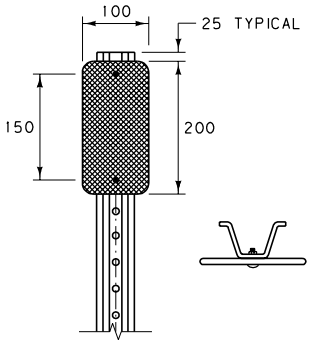

DESIGN B (YELLOW)
DESIGN G (WHITE)
DESIGN J (RED)

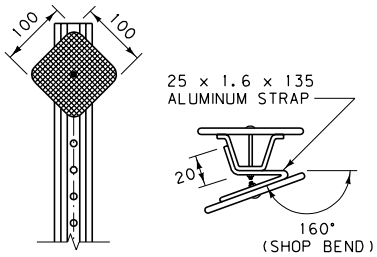

DESIGN C (WHITE)

DESIGN D USAGE:

NON-INTERSTATE ROUTES:
USE AT APPROACHES WITH STOP OR YIELD SIGNS.
INTERSTATE ROUTES:
USE FOR RAMP TERMINATION AT CROSS ROAD.

DESIGN E USAGE:

SPECIAL USE ONLY.
FORMERLY USED AT GORES AND ISLAND NOSES.

DESIGN F USAGE:

USE FOR CURVES WITH RADII GREATER THAN 170 m;
450 m TO 231 m RADIUS:
OUTSIDE ONLY.
230 m TO 171 m RADIUS:
OUTSIDE AND INSIDE OF CURVE.

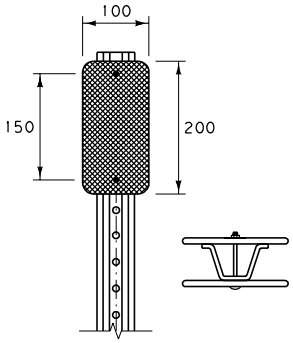

DESIGN D (YELLOW)

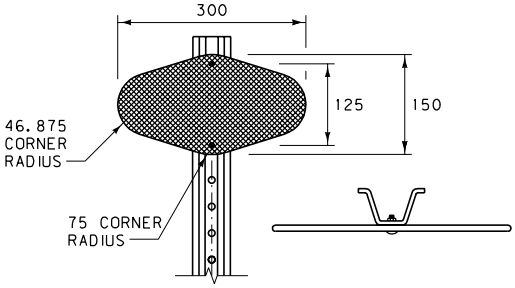

DESIGN E (YELLOW)

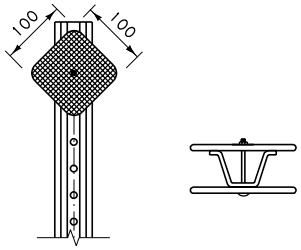

DESIGN F (WHITE)

DELINEATOR LEGEND	
DESIGN "A"	
DESIGN "B"	
DESIGN "C"	
DESIGN "D"	
DESIGN "E"	
DESIGN "F"	
DESIGN "G"	
DESIGN "H"	
DESIGN "J"	

NOTE:
SOME TYPICAL USES ARE SHOWN FOR EACH DESIGN. REFER TO THE MUTCD FOR SPECIFIC GUIDANCE.

ALL DIMENSIONS ARE MILLIMETERS (mm) UNLESS OTHERWISE NOTED.

DETAILED DRAWING

REFERENCE
STANDARD SPEC.
SECTION 619

DWG. NO.
619-34

DELINEATOR DETAILS

EFFECTIVE: APRIL 2006

serving you with pride

MONTANA DEPARTMENT OF TRANSPORTATION

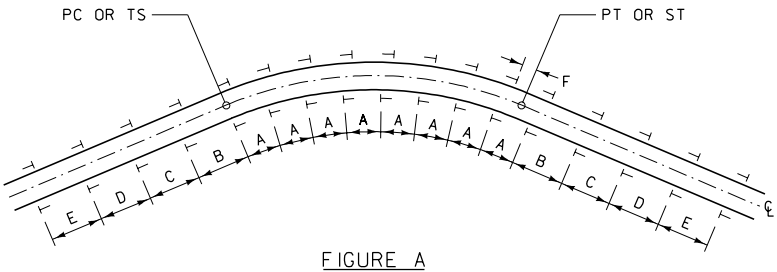

FIGURE A

SEE TABLE BELOW FOR SPACING VALUES

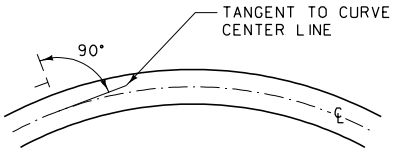

FIGURE B

HORIZONTAL CURVE SPACING TABLE					
RADIUS, m	SPACING ON CURVE, m	SPACING ON BOTH APPROACH TANGENTS, m			
	A	B	C	D	E
1750 & UP	90	120	120	120	120
900 - 1749	65	120	120	120	120
600 - 899	50	95	120	120	120
450 - 599	40	75	120	120	120
300 - 449	35	65	100	120	120
200 - 299	25	55	80	120	120
150 - 199	20	45	70	90	120
100 - 149	20	35	55	90	120
0 - 99	15	25	40	80	120

NOTES:

FURNISH RETRO-REFLECTIVE SHEETING ACCORDING TO THE STANDARD SPECIFICATIONS FOR RETRO-REFLECTIVE SHEETING B (HIGH INTENSITY). POSITION DELINEATOR FACES PERPENDICULAR TO TANGENT TO CENTERLINE OF CURVE AS SHOWN IN FIGURE B.

MOUNT DELINEATORS ON METAL U-POSTS (1.7 kg/m MIN. AND 3 kg/m MAX.) WITH 5 mm DIA. CADMIUM PLATED BOLT(S). DRILL OR PUNCH A MINIMUM OF TWELVE 9.5 mm MAXIMUM DIAMETER HOLES ON 25 mm CENTERS FROM THE TOP OF THE POST. 6.4 mm SQUARE HOLES MAY BE USED. IF SQUARE HOLES ARE USED, USE A LARGE HEADED BOLT OR AN APPROPRIATE WASHER. JAM THREADS AFTER TIGHTENING THE NUT TO PREVENT REMOVAL.

PLACE DELINEATORS AT A CONSTANT CLEARANCE DISTANCE FROM THE EDGE OF THE PAVEMENT EXCEPT WHERE GUARDRAIL OR OTHER OBSTRUCTIONS INTERFERE. ALIGN THE DELINEATORS WITH THE INSIDE EDGE OF THE OBSTRUCTION. CLEARANCE FOR DELINEATORS IS 1.8 m ON INTERSTATE HIGHWAYS, 0.6 m TO 1.8 m ON PRIMARY AND SECONDARY HIGHWAYS OR AS DETERMINED BY THE ENGINEER. THE STANDARD MOUNTING HEIGHT IS 1.2 m TO THE TOP OF THE POST. SUPPLY POST LENGTHS TO MAINTAIN THE PROPER MOUNTING HEIGHT AND A MINIMUM OF 0.45 m EMBEDMENT.

SPACE DELINEATORS ACCORDING TO THE DISTANCES FOUND IN THE TABLE ABOVE OR AS SPECIFIED IN THE PLANS. IN FIGURE A, IF "F" IS GREATER THAN 6 m ADD ONE REGULAR DELINEATOR IN AT "A" SPACING. UNDER NORMAL SPACING, SHOULD A DELINEATOR FALL WITHIN A CROSSROAD OR APPROACH, IT MAY BE MOVED IN EITHER DIRECTION A DISTANCE NOT TO EXCEED ONE QUARTER OF THE NORMAL SPACING. ELIMINATE DELINEATORS STILL FALLING IN SUCH AREAS.

ALL DELINEATOR REFLECTORS HAVE 18.75 mm CORNER RADII EXCEPT DESIGN "E".

MOUNT THE DELINEATOR REFLECTOR 25 mm BELOW THE TOP OF THE METAL U-POST.

WHEN THE ROADWAY ADT IS LESS THAN 900, DELINEATE ALL CURVES WITH 450 METER RADII OR LESS.

CONTINUOUSLY DELINEATE ROADWAYS WHEN THE ADT IS 900 AND GREATER, OR BY ENGINEERING JUDGEMENT.

ALL DIMENSIONS ARE MILLIMETERS (mm) UNLESS OTHERWISE NOTED.

DETAILED DRAWING

REFERENCE
STANDARD SPEC.
SECTION 619, 704

DWG. NO.
619-36

DELINEATOR PLACEMENT DETAILS

EFFECTIVE: APRIL 2006

serving you with pride

MONTANA DEPARTMENT OF TRANSPORTATION