NOTE:
WHEN MEDIAN INLET COVER IS INSTALLED OVER PIPES LARGER THAN 900 mm, WITHOUT ADEQUATE COVER TO PERMIT THE USE OF TYPE 1 INSTALLATION, PROVIDE A DETAIL OF THE INSTALLATION IN THE PLANS.

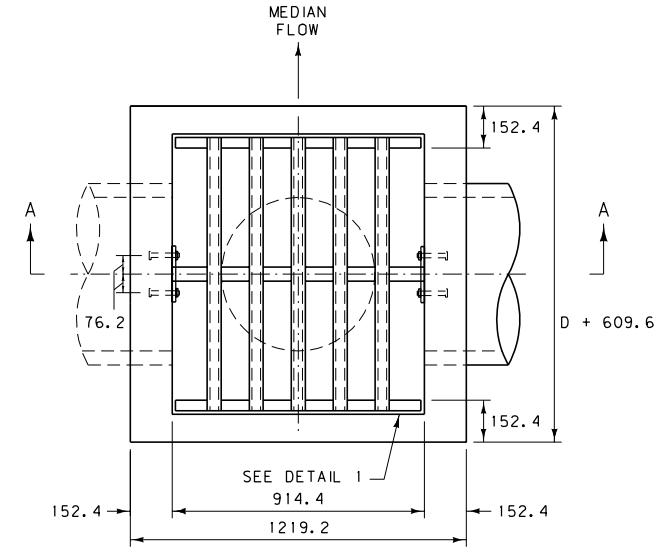

PLAN VIEW

TYPICAL FOR TYPES 1, 2 AND 3

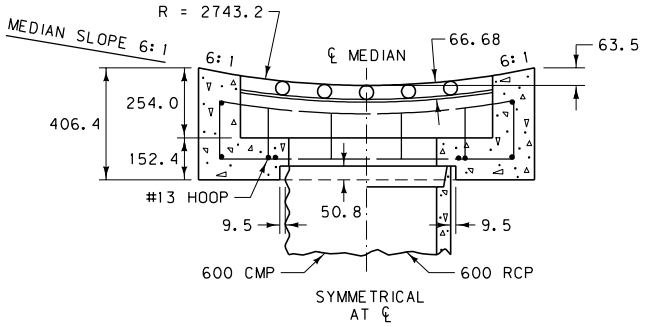

SECTION A-A

TYPE 1

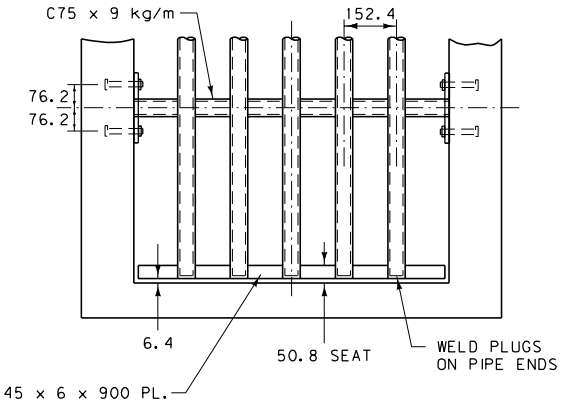

DETAIL 1

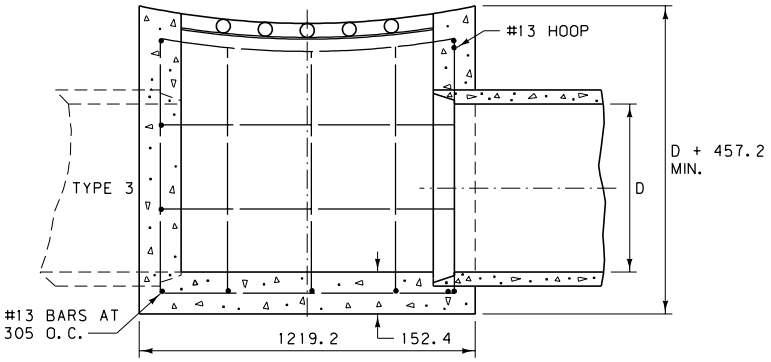

SECTION A-A

TYPE 2 HAS 1 PIPE CONNECTION
TYPE 3 HAS 2 PIPE CONNECTIONS

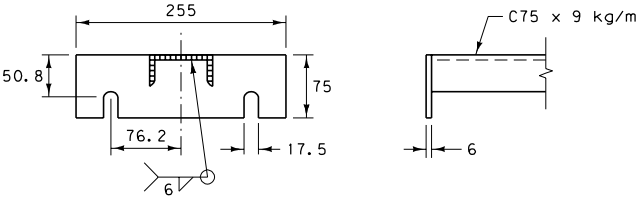

DETAIL 2

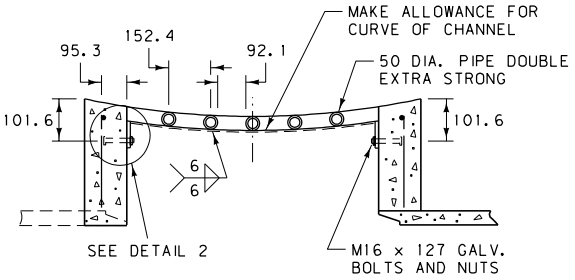

COVER DETAIL

TYPES 2 & 3

GRATE AND REINFORCING STEEL (kg) ✱			
TYPE	CMP AND RCP		
	600 mm	750 mm	900 mm
1	22.7	~	~
2	38.6	43.1	47.6
3	38.6 ⊛	43.1 ⊛	47.6 ⊛
GRATE	74.8	83.9	95.3

CLASS "DD" CONC. OR EQUAL (CUBIC METERS) ✱						
TYPE	600 mm		750 mm		900 mm	
	CMP	RCP	CMP	RCP	CMP	RCP
1	0.31	0.31	~	~	~	~
2	0.76	0.76	0.84	0.76	0.92	0.84
3	0.69 ⊛	0.69 ⊛	0.76 ⊛	0.69 ⊛	0.76 ⊛	0.69 ⊛

✱ QUANTITIES ARE FOR ESTIMATING PURPOSES ONLY.
⊛ TYPE 3 IS A SPECIAL CASE TO BE FIGURED FOR THE PARTICULAR INSTALLATION.

NOTE:
PAINT ALL EXPOSED METAL PARTS WITH ONE COAT OF ZINC RICH PAINT AND TWO COATS OF ALUMINUM PAINT IN ACCORDANCE WITH SECTION 710 OF THE STANDARD SPECIFICATIONS.

ALL DIMENSIONS ARE MILLIMETERS (mm) UNLESS OTHERWISE NOTED.

DETAILED DRAWING

REFERENCE STANDARD SPEC. SECTION 604

DWG. NO. 604-00

MEDIAN INLET COVER

EFFECTIVE: FEBRUARY 2005

MDT serving you with pride — MONTANA DEPARTMENT OF TRANSPORTATION

* MINIMUM WEIGHT FOR FRAME AND LID IS 180 kg. TOOL RING AND COVER TO A MACHINE FIT.

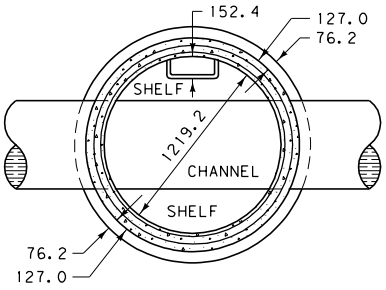

SECTION A-A

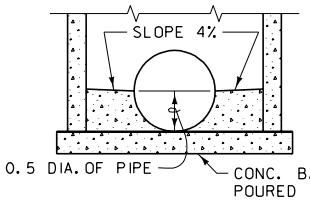

SECTION B-B

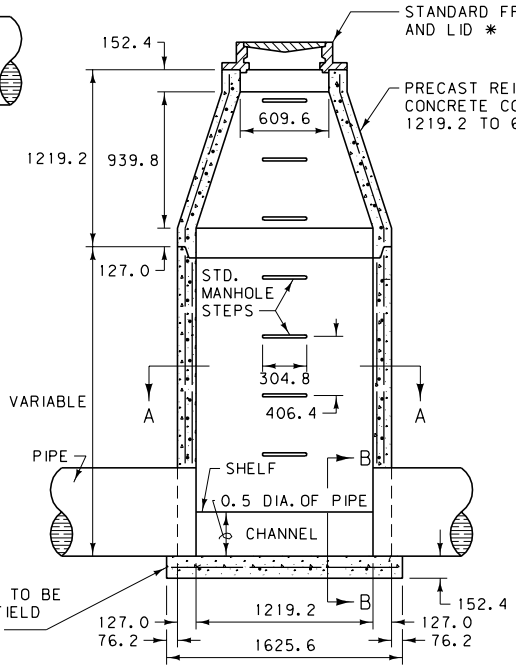

ELEVATION

TYPE 1 MANHOLE

UPPER PART IS A CONE TO REDUCE DIAMETER FROM 1219.2 mm TO 609.6 mm. CUT BOTTOM OF LOWER SECTION SQUARE TO FIT BASE. GROUT JOINT BETWEEN BASE AND WALL. A GROUT CONSISTING OF ONE PART PORTLAND CEMENT AND TWO PARTS APPROVED SAND MAY BE USED; AN APPROVED PREMIXED GROUT, AVAILABLE COMMERCIALLY, MAY BE USED.

CONFORM ALL MANHOLE CONSTRUCTION, EXCEPTING FRAME, LID, AND BASE, TO AASHTO M 199M. THIS PROVIDES THAT REINFORCEMENT MAY BE MADE OF (1) COLD DRAWN STEEL WIRE- AASHTO M 32M, (2) STEEL WIRE FABRIC- AASHTO M 55M, OR (3) STEEL BARS- AASHTO M 31M.

THE CONSTRUCTION AND REINFORCEMENT OF THE BASE FOR EACH TYPE MUST BE COMPATIBLE WITH THE CONDITIONS AND THE WEIGHT OF THE SUPERSTRUCTURE. AASHTO M 199M PROVIDES FOR 27.6 MPa CONCRETE. THE MIX CALLS FOR 335 kg OF CEMENT PER CUBIC METER. REINFORCEMENT SHOWN IS ILLUSTRATIVE ONLY. SEE AASHTO M 199M.

THE ECCENTRIC CONE TRANSITION WILL BE PERMITTED WHEN ITS USE WILL BE AS GOOD OR BETTER THAN THE ONES SHOWN, OR IF IT IS MORE ADAPTABLE TO EXISTING CONDITIONS.

USE MANHOLE STEPS THAT ARE METALLIC AND COATED WITH COPOLYMER POLYPROPYLENE, OR AN APPROVED EQUAL. THE MINIMUM DESIGN LIVE LOAD FOR A SINGLE CONCENTRATED LOAD IS 135 kg.

TYPE 3 MANHOLE ROOF SLAB					
PIPE DIA.	SLAB DIA.	T	K	BOTTOM BARS	TOP BARS
1200	1473.2	152.4	152.4	#13 AT 150	~
1350	1651.0	203.2	152.4	#13 AT 150	~
1500	1828.8	203.2	177.8	#13 AT 150	#10 AT 150
1650	2006.6	203.2	177.8	#13 AT 150	#10 AT 150
1800	2184.4	203.2	203.2	#13 AT 150	#10 AT 150
1950	2362.2	203.2	203.2	#13 AT 100	#13 AT 100
2100	2540.0	203.2	228.6	#13 AT 100	#13 AT 100
2250	2717.8	203.2	228.6	#13 AT 100	#13 AT 100
2400	2895.6	203.2	228.6	#16 AT 100	#13 AT 100
2550	3073.4	203.2	228.6	#16 AT 100	#13 AT 100

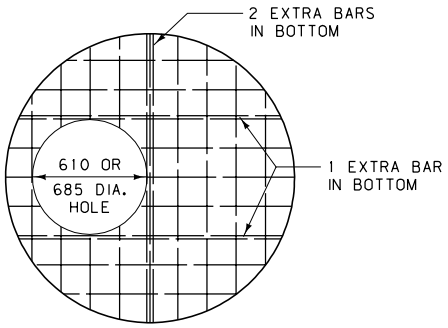

TYPE 3 MANHOLE ROOF SLAB

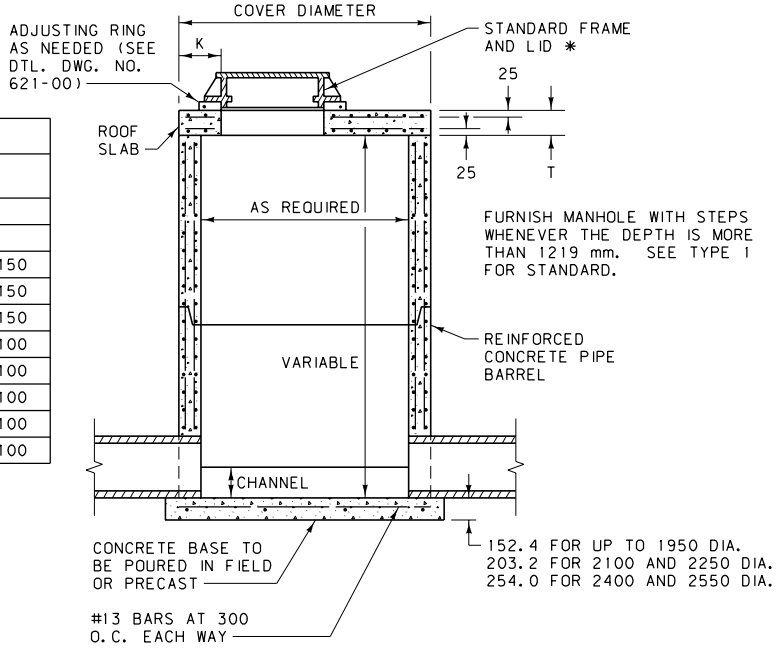

FURNISH MANHOLE WITH STEPS WHENEVER THE DEPTH IS MORE THAN 1219 mm. SEE TYPE 1 FOR STANDARD.

TYPE 3 MANHOLE

ALL DIMENSIONS ARE MILLIMETERS (mm) UNLESS OTHERWISE NOTED.

DETAILED DRAWING	
REFERENCE STANDARD SPEC. SECTION 604, 711	DWG. NO. 604-02
CONCRETE MANHOLE	
EFFECTIVE: FEBRUARY 2005	

MDT serving you with pride — MONTANA DEPARTMENT OF TRANSPORTATION

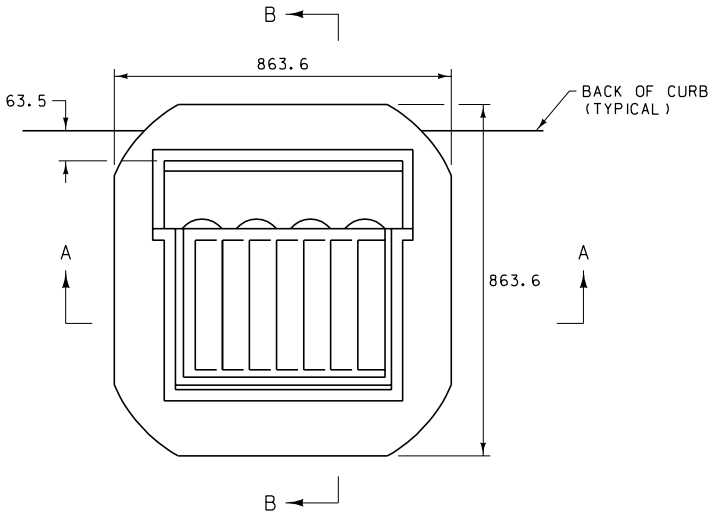

PLAN

NEENAH FOUNDRY R-3286-8V (JUNE 1992 REVISION) OR APPROVED EQUAL (VANE STYLE)

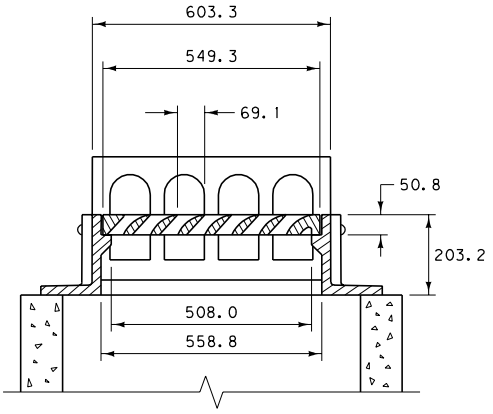

SECTION A-A

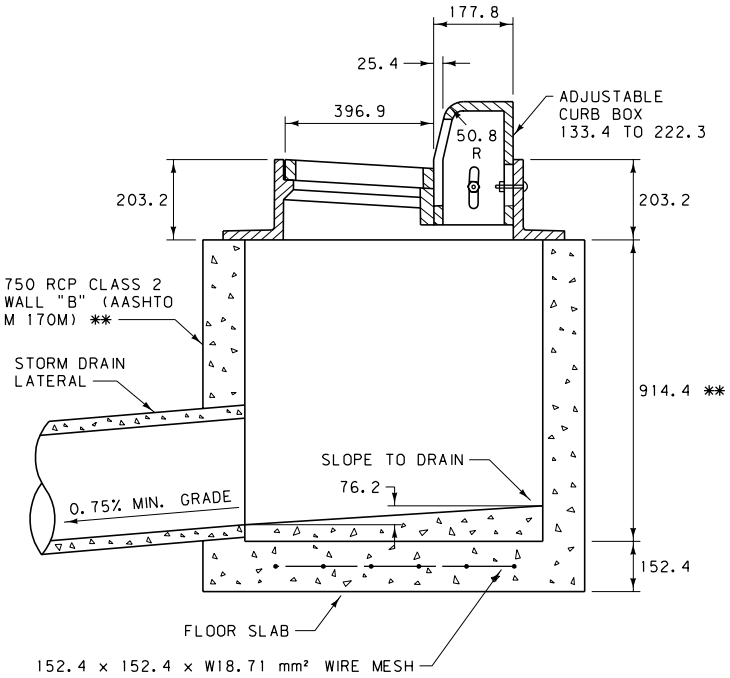

SECTION B-B

** STANDARD UNLESS OTHERWISE NOTED ON THE PLANS.

COMBINATION

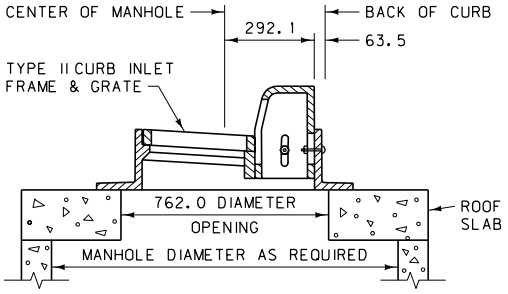

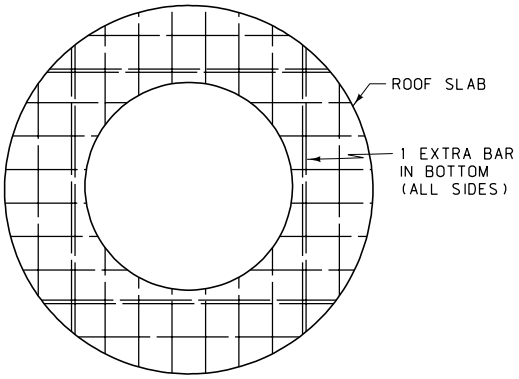

ROOF SLAB

SEE DETAILED DRAWING NO. 604-02 FOR DIAMETER, SLAB THICKNESS AND REINFORCING REQUIREMENTS FOR COMBINATION TYPE 3 MANHOLE, TYPE II CURB INLET.

NOTE:
ALL CONCRETE IS CLASS "DD" OR APPROVED EQUAL.

ALL DIMENSIONS ARE MILLIMETERS (mm) UNLESS OTHERWISE NOTED.

DETAILED DRAWING	
REFERENCE STANDARD SPEC. SECTION 604	DWG. NO. 604-03
CURB INLET TYPE II	
EFFECTIVE: FEBRUARY 2005	

MDT serving you with pride — MONTANA DEPARTMENT OF TRANSPORTATION

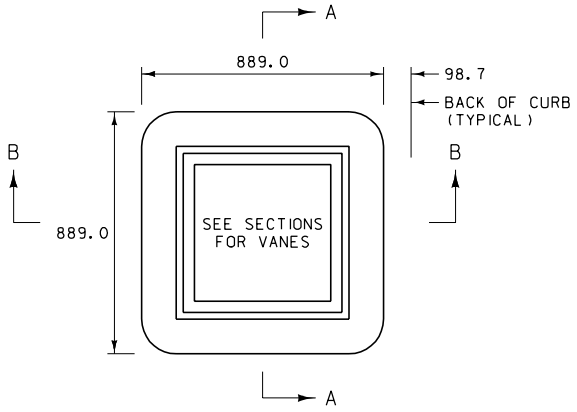

PLAN

NEENAH CASTING R-3210-L (VANE STYLE) OR APPROVED EQUAL

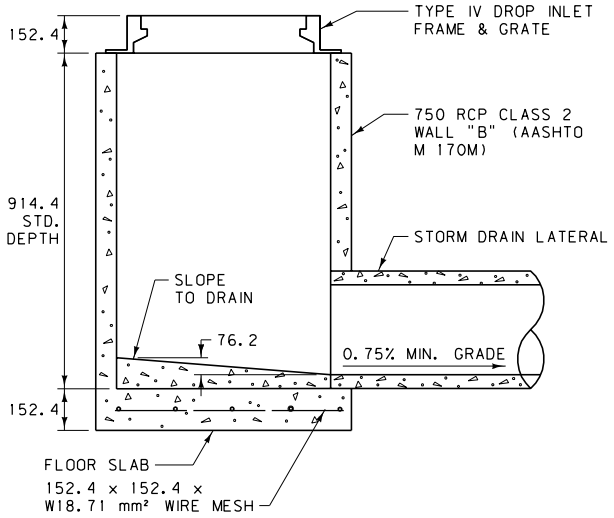

SINGLE DROP INLET
TYPE IV

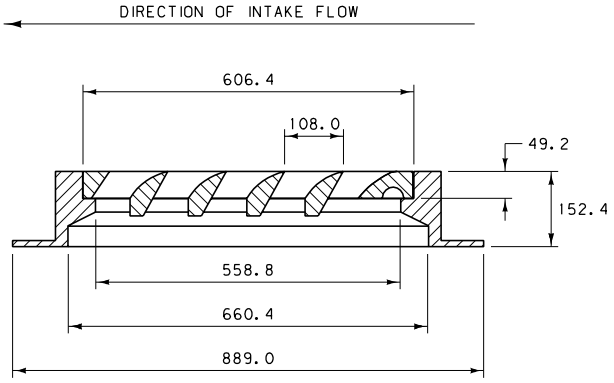

SECTION A-A

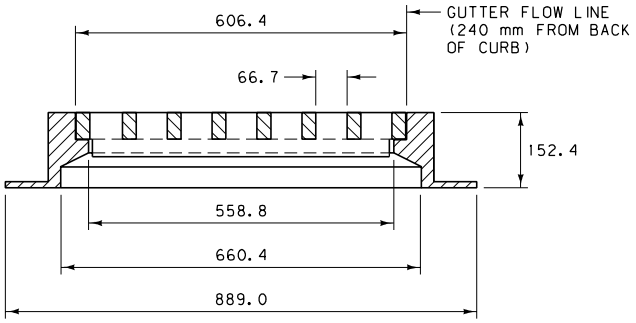

SECTION B-B

COMBINATION

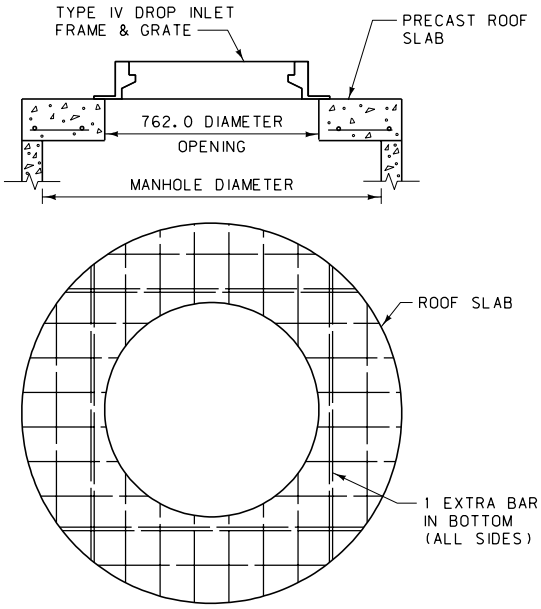

ROOF SLAB

SEE DETAILED DRAWING NO. 604-02 FOR DIAMETER, SLAB THICKNESS AND REINFORCING REQUIREMENTS FOR COMBINATION TYPE 3 MANHOLE, TYPE IV DROP INLET.

NOTE:
ALL CONCRETE IS CLASS "DD" OR APPROVED EQUAL.

ALL DIMENSIONS ARE MILLIMETERS (mm) UNLESS OTHERWISE NOTED.

DETAILED DRAWING	
REFERENCE STANDARD SPEC. SECTION 604	DWG. NO. 604-04
DROP INLET TYPE IV	
EFFECTIVE: FEBRUARY 2005	

serving you with pride — MONTANA DEPARTMENT OF TRANSPORTATION

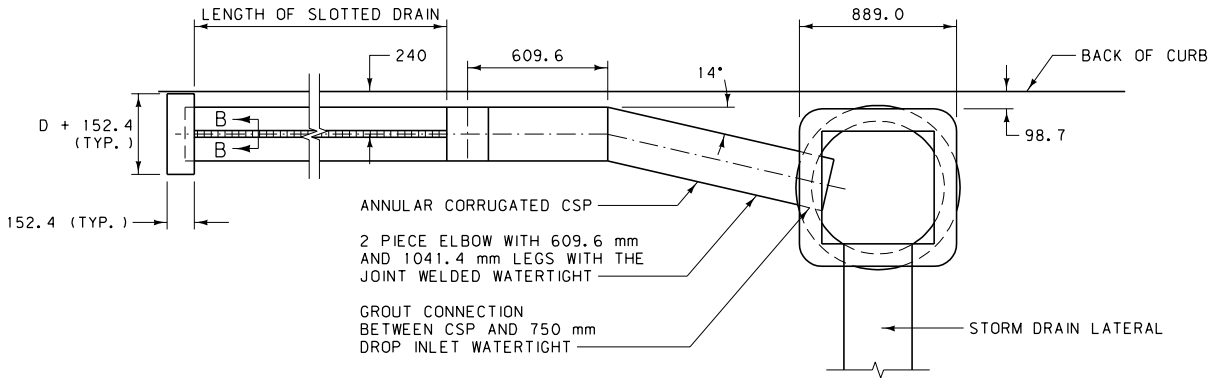

PLAN

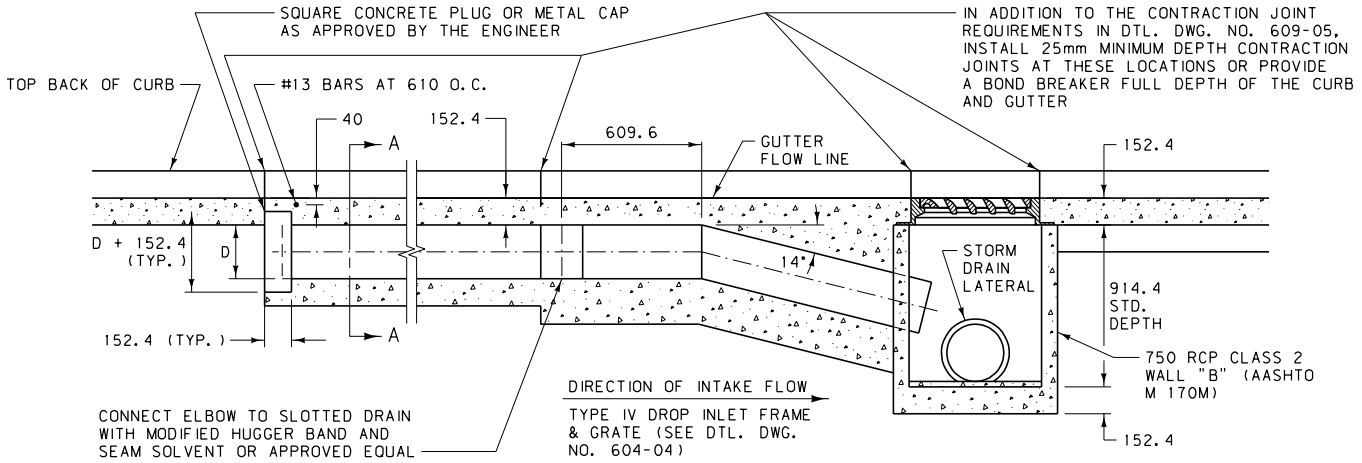

ELEVATION

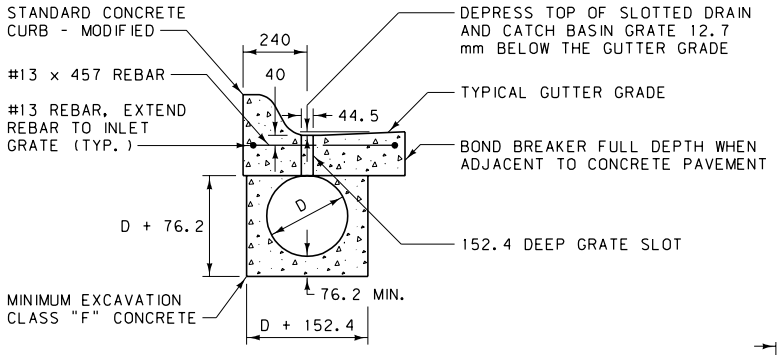

SECTION A-A

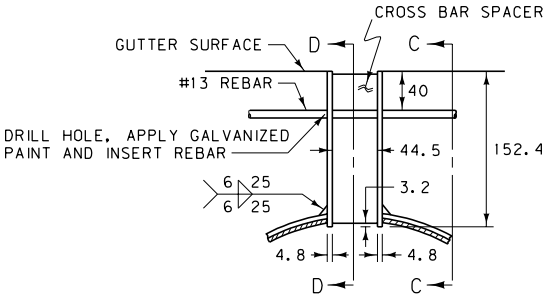

SECTION B-B

GRATE SLOT DETAIL

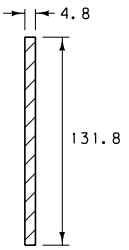

SECTION D-D

CROSS BAR SPACER

NOTES:

PAINT ALL WELDS AND OTHER NON-GALVANIZED PARTS, EXCEPT REBAR IN ACCORDANCE WITH STD. SPEC. SECTION 710.

USE A 6.8 OR 13.6 KILOGRAM ROOFING FELT MATERIAL, OR OTHER PRODUCT AS APPROVED BY THE ENGINEER, FOR A BOND BREAKER.

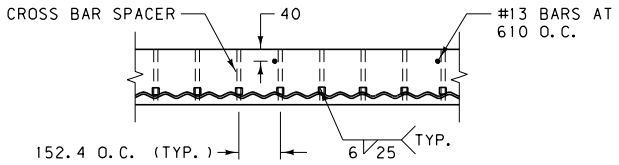

SECTION C-C

GRATE SLOT WELDING DETAIL

ALL DIMENSIONS ARE MILLIMETERS (mm) UNLESS OTHERWISE NOTED.

DETAILED DRAWING	
REFERENCE STANDARD SPEC. SECTION 604	DWG. NO. 604-06
TYPE IV DROP INLET WITH SLOTTED DRAIN	
EFFECTIVE: FEBRUARY 2005	

MDT serving you with pride — MONTANA DEPARTMENT OF TRANSPORTATION

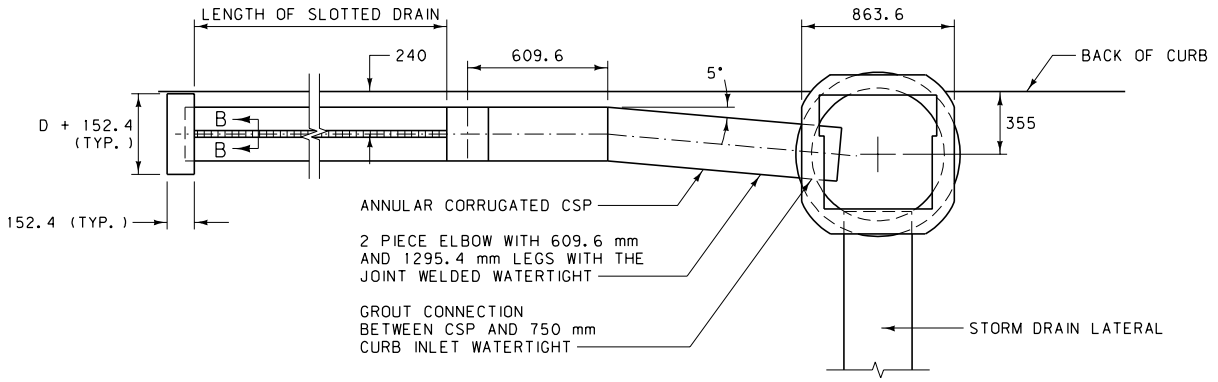

PLAN

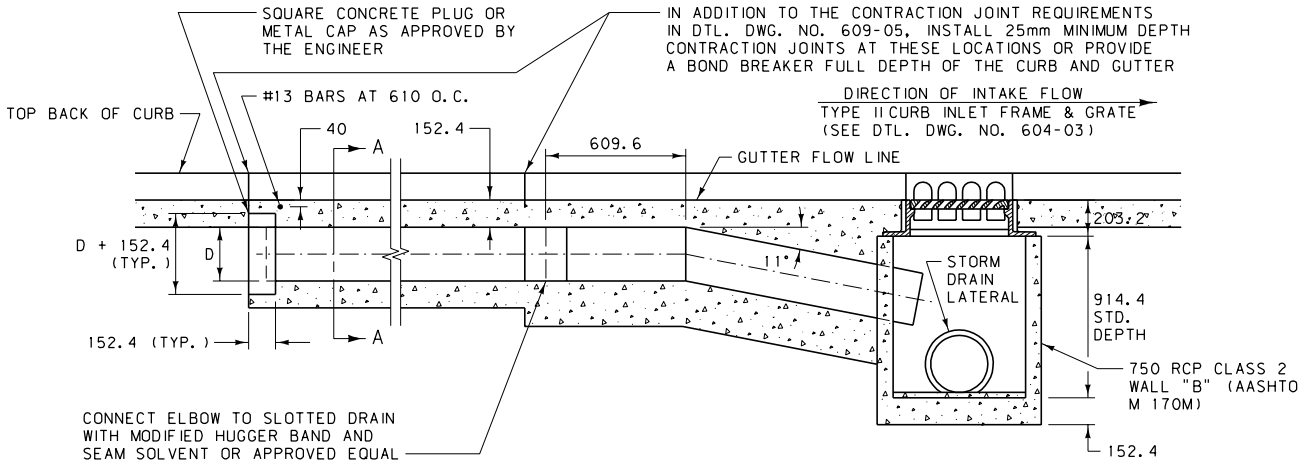

ELEVATION

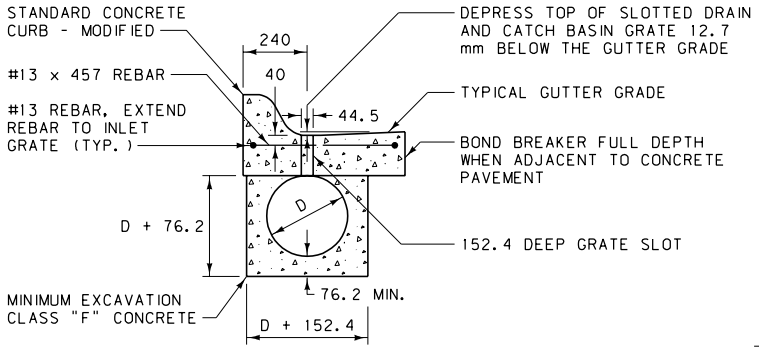

SECTION A-A

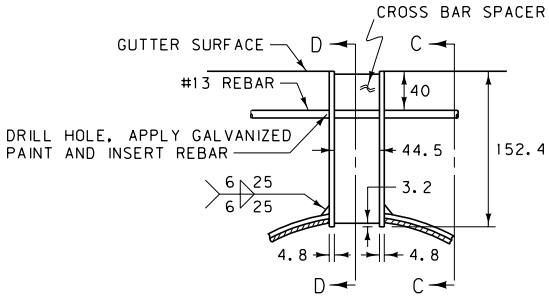

SECTION B-B

GRATE SLOT DETAIL

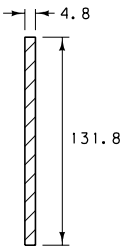

SECTION D-D

CROSS BAR SPACER

NOTES:

PAINT ALL WELDS AND OTHER NON-GALVANIZED PARTS, EXCEPT REBAR IN ACCORDANCE WITH STD. SPEC. SECTION 710.

USE A 6.8 OR 13.6 KILOGRAM ROOFING FELT , MATERIAL, OR OTHER PRODUCT AS APPROVED BY THE ENGINEER, FOR A BOND BREAKER.

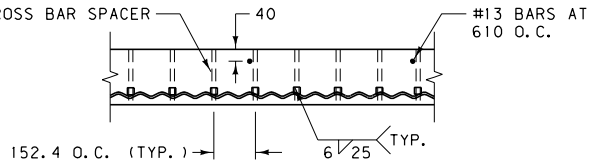

SECTION C-C

GRATE SLOT WELDING DETAIL

ALL DIMENSIONS ARE MILLIMETERS (mm) UNLESS OTHERWISE NOTED.

DETAILED DRAWING	
REFERENCE STANDARD SPEC. SECTION 604	DWG. NO. 604-08
TYPE II CURB INLET WITH SLOTTED DRAIN	
EFFECTIVE: FEBRUARY 2005	

MDT serving you with pride — MONTANA DEPARTMENT OF TRANSPORTATION

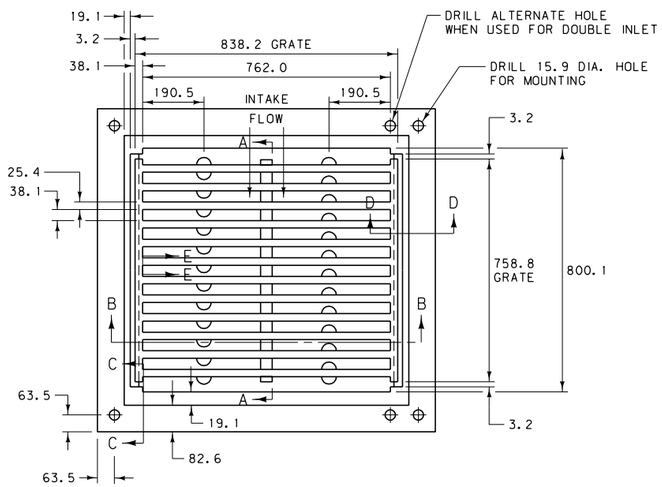

PLAN

NOTE: INSTALL GRATE WITH BARS PERPENDICULAR TO INTAKE FLOW

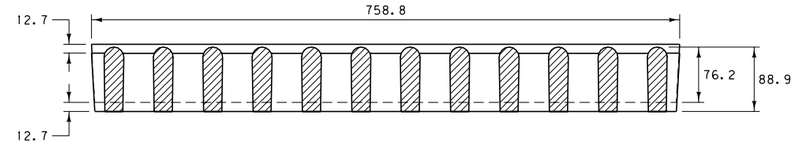

SECTION A-A

GRATE

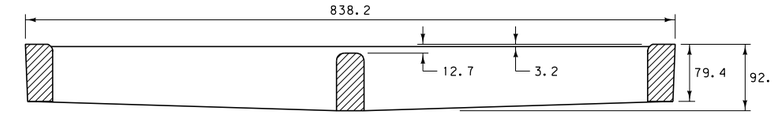

SECTION B-B

GRATE

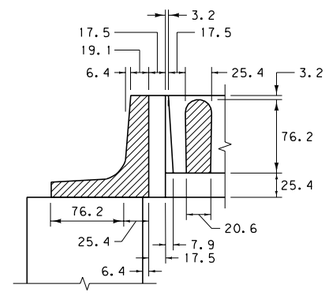

SECTION C-C

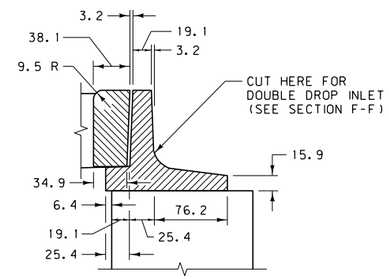

SECTION D-D

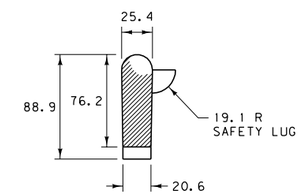

SECTION E-E

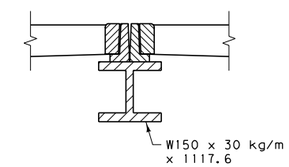

SECTION F-F

(FOR DOUBLE INLET)

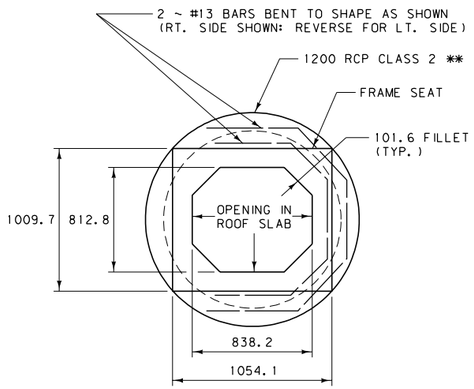

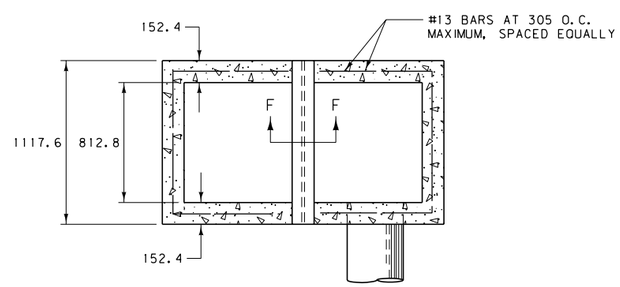

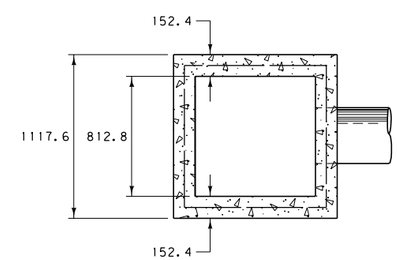

QUANTITIES *		
	CONCRETE	REINF. STL.
TYPE I	0.344 m³	18.1 kg
TYPE II	1.147 m³	65.8 kg
TYPE III	0.765 m³	40.8 kg

* FOR ESTIMATING PURPOSES ONLY

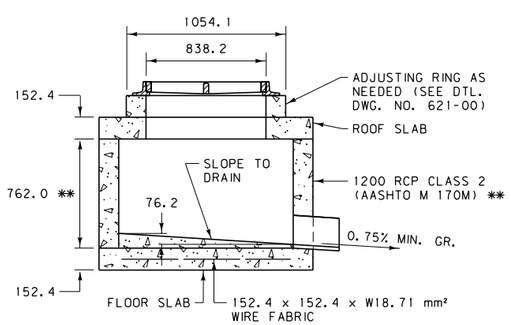

ROUND, SINGLE DROP INLET

TYPE I

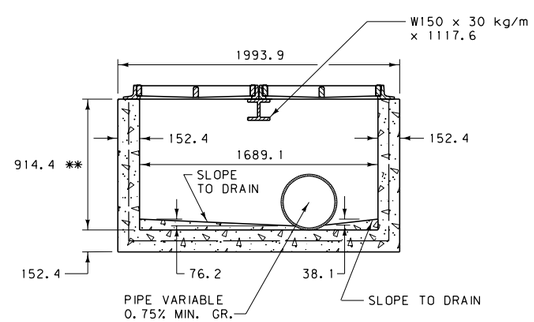

DOUBLE DROP INLET

TYPE II

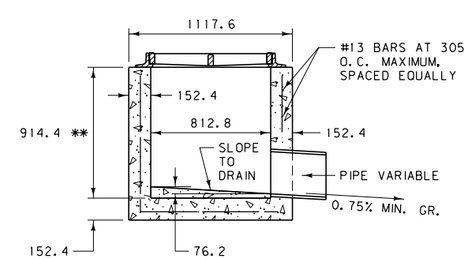

SINGLE DROP INLET

TYPE III

NOTES:

USE TYPE I, TYPE II AND TYPE III DROP INLETS IN SAG LOCATIONS ONLY.

ALL CONCRETE IS CLASS "DD" OR APPROVED EQUAL.

SEE PLANS FOR DETAILS AND QUANTITIES.

** STANDARD UNLESS OTHERWISE NOTED ON PLANS.

ALL DIMENSIONS ARE MILLIMETERS (mm) UNLESS OTHERWISE NOTED.

DETAILED DRAWING	
REFERENCE STANDARD SPEC. SECTION 604	DWG. NO. 604-14
DROP INLETS	
EFFECTIVE: FEBRUARY 2005	

serving you with pride — MONTANA DEPARTMENT OF TRANSPORTATION