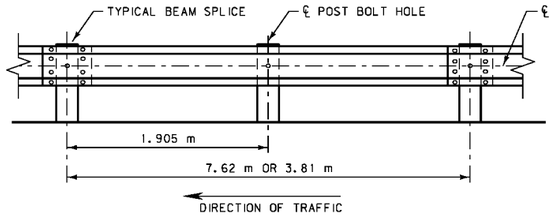

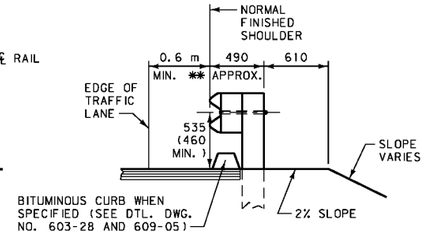

** WIDENING IS REQUIRED IF FINISHED SHOULDER IS LESS THAN 0.6 m FROM TRAFFIC LANE.

TYPICAL INSTALLATION

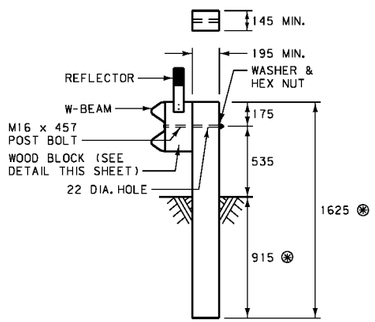

WOOD POST AND MOUNTING DETAIL

⊛ STANDARD UNLESS SPECIFIED OTHERWISE IN PLANS.

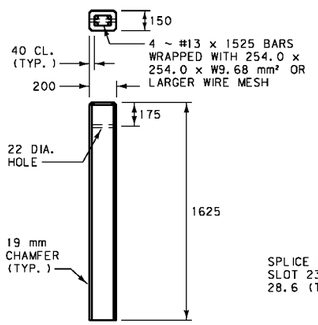

CONCRETE POST DETAIL

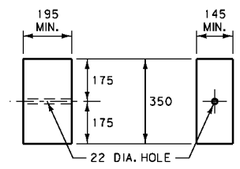

WOOD BLOCK

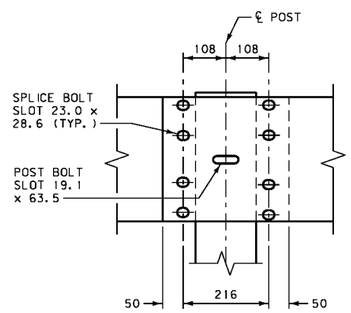

BEAM SPLICE

(LAP IN DIRECTION OF ADJACENT TRAFFIC)

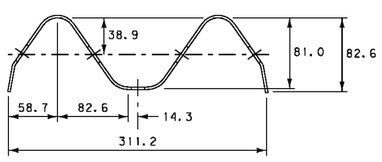

W-BEAM

RE-3-73 *

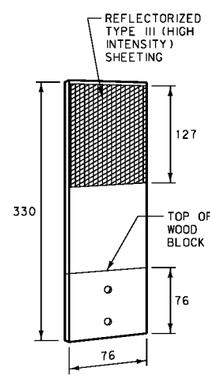

REFLECTOR

(SEE NOTES)

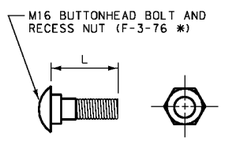

SPLICE BOLT, L = 31
POST BOLT, L = 457

SPLICE AND POST BOLT & NUT

NOTES:

INSTALL ALL BOLTS WITH HEADS ON TRAFFIC SIDE OF INSTALLATION.

AFFIX BLOCKS TO POSTS WITH CONSTRUCTION ADHESIVE OR TWO 16 PENNY GALV. NAILS OR 14 GAGE WIRE WRAP.

ATTACH REFLECTORS TO WOOD BLOCKS EVERY 7.62 m, WITH THE REFLECTORIZED SURFACE FACING ADJACENT TRAFFIC. FASTEN REFLECTOR TO BLOCK USING TWO 16 PENNY GALVANIZED NAILS AND TWO 4.8 mm DIA. WASHERS IN PRE-DRILLED HOLES.

* SEE DTL. DWG. NO. 606-80 FOR SCHEDULE OF GUARDRAIL HARDWARE.

ALL DIMENSIONS ARE MILLIMETERS (mm) UNLESS OTHERWISE NOTED.

DETAILED DRAWING	
REFERENCE STANDARD SPEC. SECTION 606	DWG. NO. 606-05
METAL GUARDRAIL	
EFFECTIVE: AUGUST 1999	

MDT MONTANA DEPARTMENT OF TRANSPORTATION — MONTANA CADD

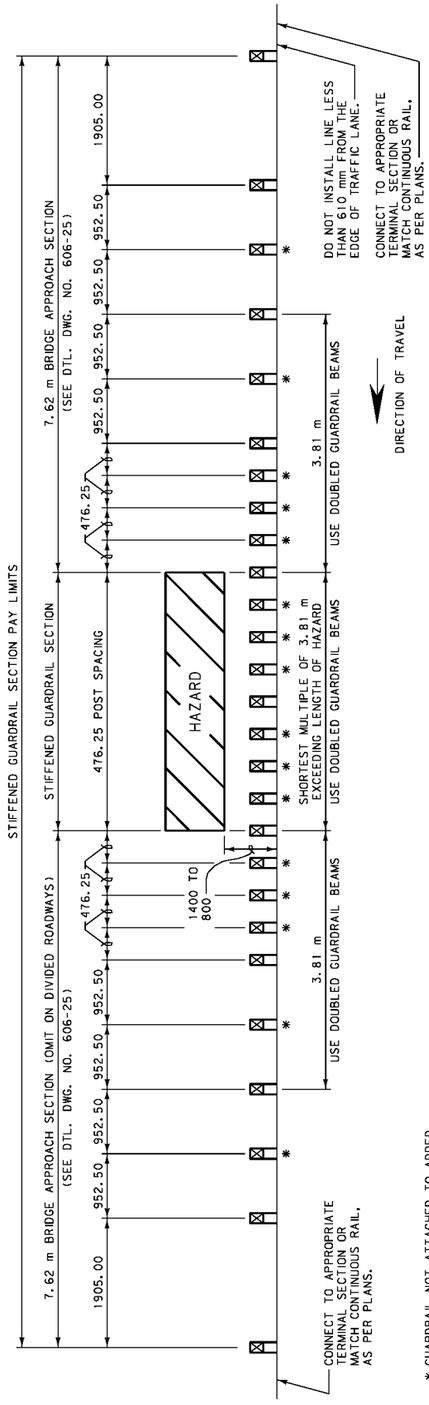

LINE HAZARD APPLICATION

* GUARDRAIL NOT ATTACHED TO ADDED POSTS. BLOCK-OUT FASTENED TO POST WITH STANDARD POST BOLT.

GUARDRAIL ATTACHED TO POSTS ONLY AT STANDARD MULTIPLES OF 1.905 m THROUGH HAZARD SECTION.

NOTES:

HAZARDS CLOSER TO THE INSTALLATION LINE THAN THE INDICATED LIMITS REQUIRE THE USE OF CONCRETE BARRIER RAIL.

LAP ALL DOUBLED RAIL IN THE DIRECTION OF ADJACENT TRAFFIC.

ALL POSTS AND BLOCKS ARE STANDARD DIMENSIONS AS PER DETAILED DRAWING NO. 606-05.

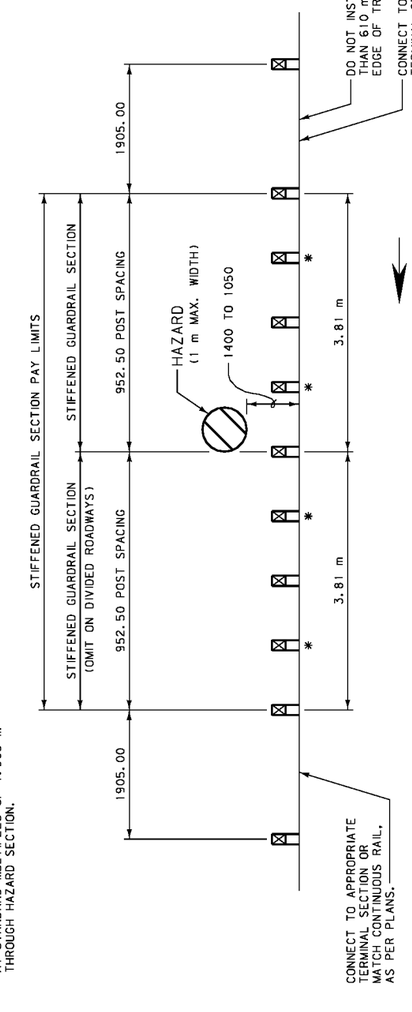

POINT HAZARD APPLICATION

ALL DIMENSIONS ARE MILLIMETERS (mm) UNLESS OTHERWISE NOTED.

DETAILED DRAWING	
REFERENCE STANDARD SPEC. SECTION 606	DWG. NO. 606-07
STIFFENED GUARDRAIL SECTIONS	
EFFECTIVE: AUGUST 1999	

MDT MONTANA DEPARTMENT OF TRANSPORTATION — MONTANA CADD

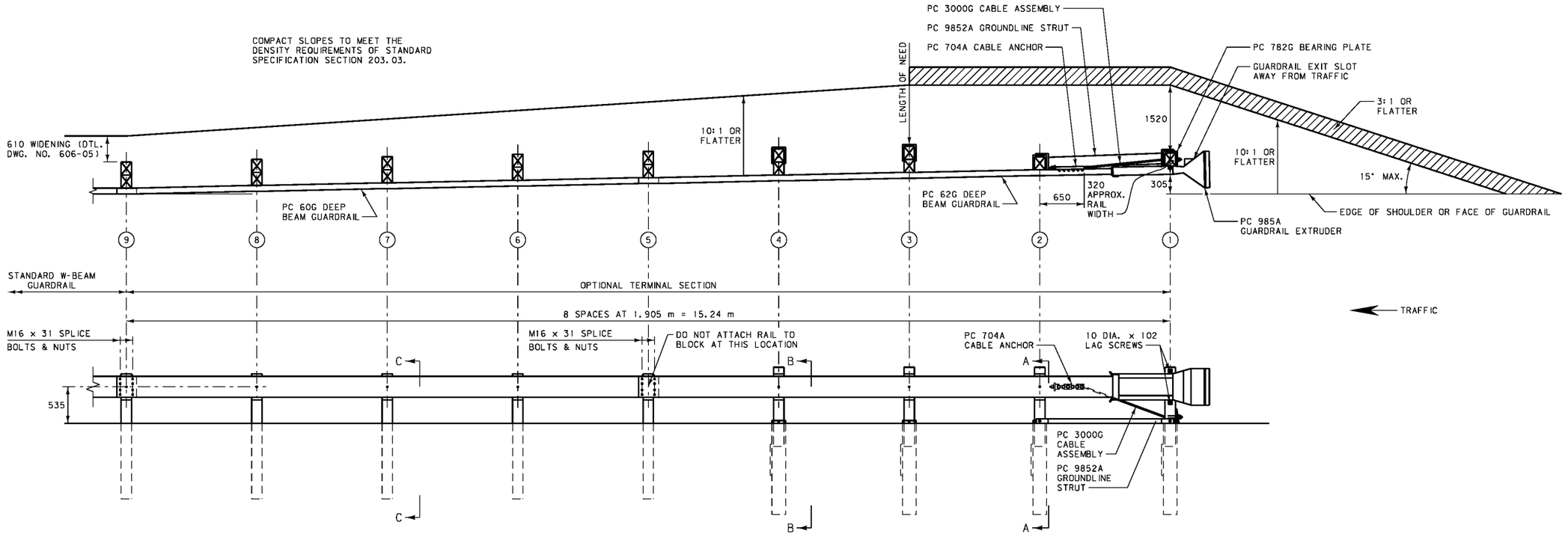

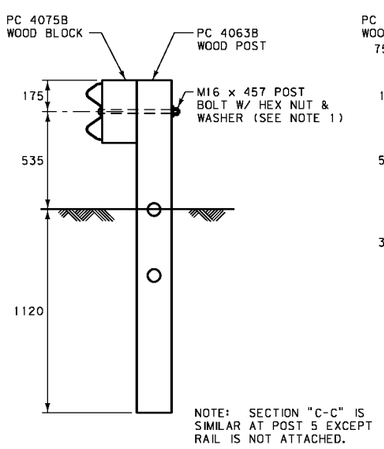

SECTION "C-C"
(TYP. AT POSTS 6, 7 AND 8)

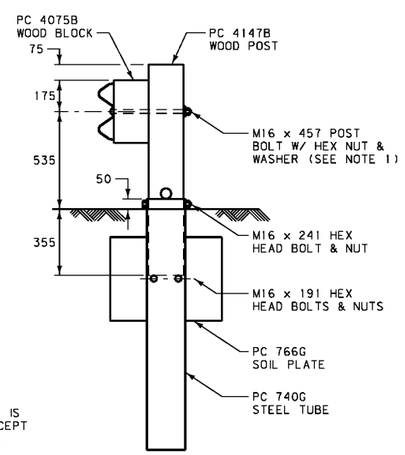

SECTION "B-B"
(TYP. AT POSTS 3 AND 4)

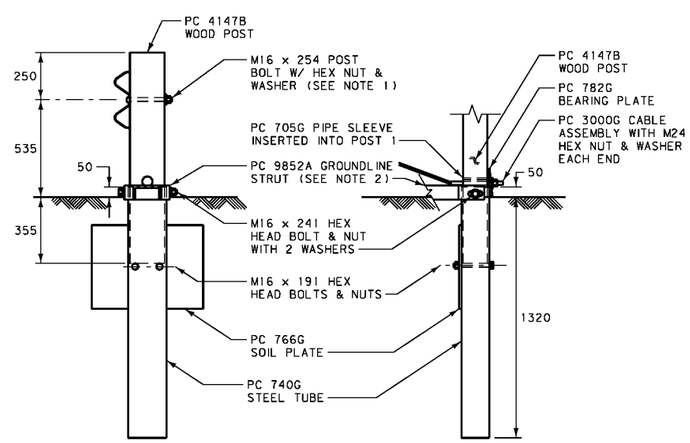

SECTION "A-A"
(AT POST 2)

PARTIAL VIEW AT POST 1
(DO NOT ATTACH RAIL TO POST 1)

BILL OF MATERIAL		
PC	QTY	DESCRIPTION
60G	1	DEEP BEAM G.R. (12 GA., 2.7 THK.), 7.62 m
62G	1	DEEP BEAM G.R. (12 GA., 2.7 THK.), 7.62 m
704A	1	CABLE ANCHOR
705G	1	PIPE SLEEVE, 50 DIA. x 140
740G	4	STEEL TUBE, 152 x 203 x 1370
766G	4	SOIL PLATE, 460 x 610 x 6
782G	1	BEARING PLATE, 200 x 200 x 16
985A	1	GUARDRAIL EXTRUDER
3000G	1	CABLE ASSEMBLY
3300G	11	M16 WASHER
3340G	35	M16 NUT
3360G	16	M16 x 31 SPLICE BOLT
3478G	8	M16 x 191 HEX HEAD BOLT
3497G	4	M16 x 241 HEX HEAD BOLT
3500G	1	M16 x 254 POST BOLT
3580G	6	M16 x 457 POST BOLT
3900G	2	M24 WASHER
3910G	2	M24 HEX NUT
4063B	4	WOOD POST, 150 x 200 x 1830
4075B	6	WOOD BLOCK, 150 x 200 x 350
4147B	4	WOOD POST, 140 x 190 x 1145
4228G	2	10 DIA. x 102 LAG SCREW
9852A	1	GROUNDLINE STRUT (LEFT OR RIGHT)

NOTES:

1. THE M16 FLAT WASHER IS USED UNDER THE NUT, BEHIND THE POST ONLY. NO WASHER IS USED AT THE RAIL.
2. STRUT CHANNEL IS SHOWN LEGS DOWN. FOR OPPOSITE HAND INSTALL LEGS UP.
3. USE THE ET-2000 TERMINAL SECTION ON DIVIDED ROADWAYS IF THE WIDTH IS 7.5 m OR GREATER BETWEEN FINISHED SURFACES. CONSIDER OTHER TERMINAL SECTIONS IF THE WIDTH IS LESS THAN 7.5 m BETWEEN FINISHED SURFACES.
4. FLARE THE END SECTION AWAY FROM TRAFFIC AT A RATE OF 50:1 FOR 15.24 m (ILLUSTRATED). FLARES OF 50:1 FOR 30.48 m MAY ALSO BE USED. THE FLARE MAY BE OMITTED ON ROADS WITH SHOULDERS GREATER THAN 0.6 m IN WIDTH.
5. PLACE A SELF-ADHESIVE OBJECT MARKER ON THE GUARDRAIL EXTRUDER FACE, HAVING ALTERNATING RETRO-REFLECTIVE BLACK AND YELLOW STRIPES SLOPED DOWNWARD AT AN ANGLE OF 45° TOWARDS THE SIDE ON WHICH TRAFFIC IS TO PASS.

ALL DIMENSIONS ARE MILLIMETERS (mm) UNLESS OTHERWISE NOTED.

DETAILED DRAWING

REFERENCE STANDARD SPEC. SECTION 606

DWG. NO. 606-13A

OPTIONAL TERMINAL SECTION - ET-2000

EFFECTIVE: AUGUST 1999

MDT MONTANA DEPARTMENT OF TRANSPORTATION

MONTANA CADD

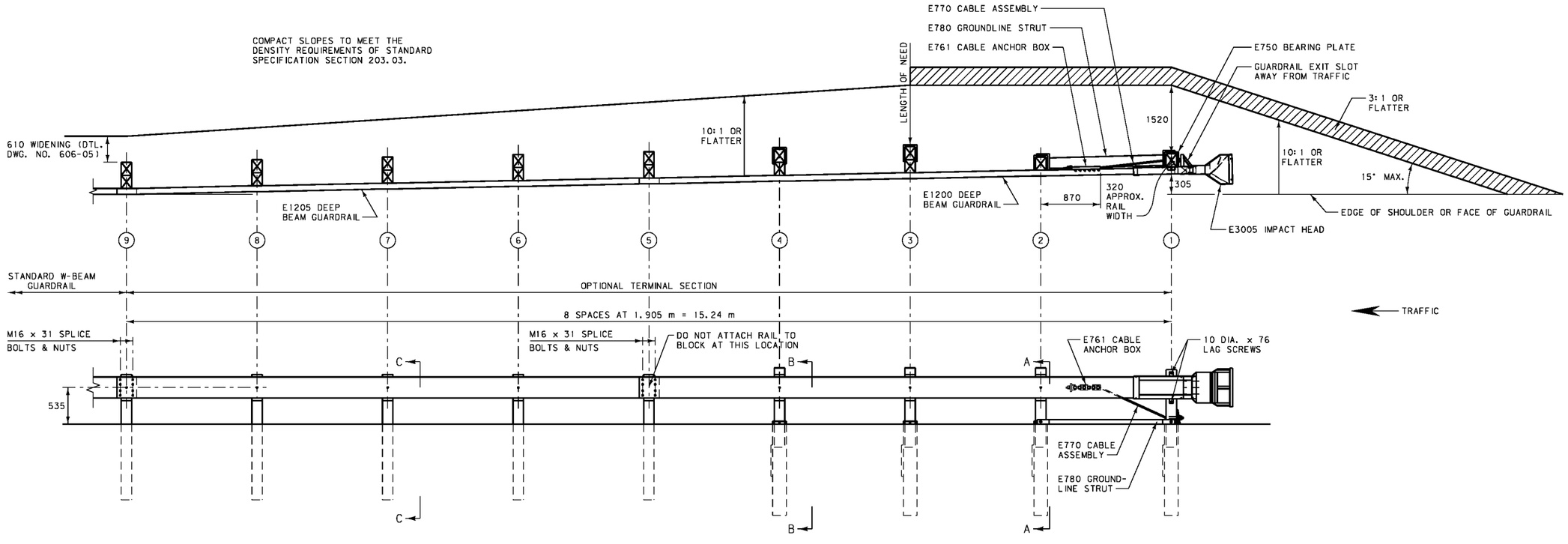

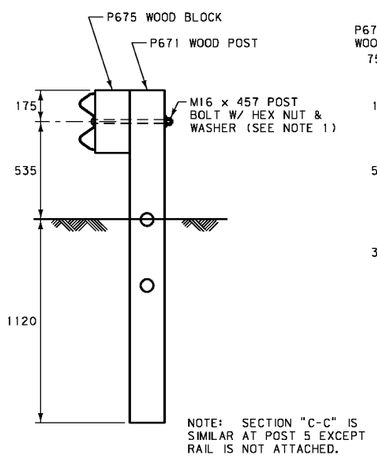

SECTION "C-C"
(TYP. AT POSTS 6, 7 AND 8)

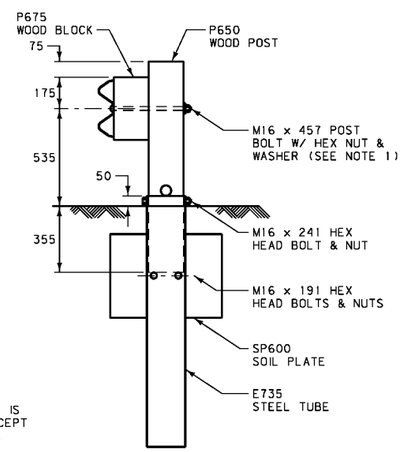

SECTION "B-B"
(TYP. AT POSTS 3 AND 4)

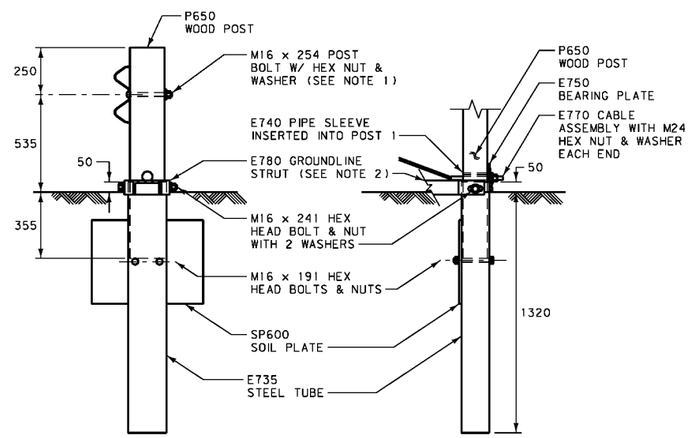

SECTION "A-A"
(AT POST 2)

PARTIAL VIEW AT POST 1
(DO NOT ATTACH RAIL TO POST 1)

BILL OF MATERIAL		
CODE	QTY	DESCRIPTION
E1200	1	DEEP BEAM G.R. (12 GA., 2.7 THK.), 8089.9
E1205	1	DEEP BEAM G.R. (12 GA., 2.7 THK.), 7937.5
E735	4	STEEL TUBE, 152 x 203 x 1370
SP600	4	SOIL PLATE, 460 x 610 x 6
E740	1	PIPE SLEEVE, 50 DIA. x 140
E750	1	BEARING PLATE, 200 x 200 x 16
E761	1	CABLE ANCHOR BOX
E770	1	CABLE ASSEMBLY
E780	1	GROUNDLINE STRUT (LEFT OR RIGHT)
E3005	1	BEST IMPACT HEAD
P650	4	WOOD POST, 140 x 190 x 1145
P671	4	WOOD CRT POST, 150 x 200 x 1830
P675	6	WOOD BLOCK, 150 x 200 x 350
B580122	16	M16 x 31 SPLICE BOLT
B580754	8	M16 x 191 HEX HEAD BOLT
B580954	4	M16 x 241 HEX HEAD BOLT
B581002	1	M16 x 254 POST BOLT
B581802	6	M16 x 457 POST BOLT
E350	2	10 x 76 LAG SCREW
N050	35	M16 NUT
W050	11	M16 FLAT WASHER
N100	2	M24 HEX NUT
W100	2	M24 WASHER

NOTES:

1. THE M16 FLAT WASHER IS USED UNDER THE NUT, BEHIND THE POST ONLY. NO WASHER IS USED AT THE RAIL.
2. STRUT CHANNEL IS SHOWN LEGS DOWN. FOR OPPOSITE HAND INSTALL LEGS UP.
3. USE THE BEST TERMINAL SECTION ON DIVIDED ROADWAYS IF THE WIDTH IS 7.5 m OR GREATER BETWEEN FINISHED SURFACES. CONSIDER OTHER TERMINAL SECTIONS IF THE WIDTH IS LESS THAN 7.5 m BETWEEN FINISHED SURFACES.
4. FLARE THE END SECTION AWAY FROM TRAFFIC AT A RATE OF 50:1 FOR 15.24 m (ILLUSTRATED). FLARES OF 50:1 FOR 30.48 m MAY ALSO BE USED. THE FLARE MAY BE OMITTED ON ROADS WITH SHOULDERS GREATER THAN 0.6 m IN WIDTH.
5. PLACE A SELF-ADHESIVE OBJECT MARKER ON THE GUARDRAIL EXTRUDER FACE, HAVING ALTERNATING RETRO-REFLECTIVE BLACK AND YELLOW STRIPES SLOPED DOWNWARD AT AN ANGLE OF 45° TOWARDS THE SIDE ON WHICH TRAFFIC IS TO PASS.

ALL DIMENSIONS ARE MILLIMETERS (mm) UNLESS OTHERWISE NOTED.

DETAILED DRAWING

REFERENCE STANDARD SPEC. SECTION 606

DWG. NO. 606-13B

OPTIONAL TERMINAL SECTION - BEST

EFFECTIVE: AUGUST 1999

MDT MONTANA DEPARTMENT OF TRANSPORTATION

MONTANA CADD

This Frame left blank

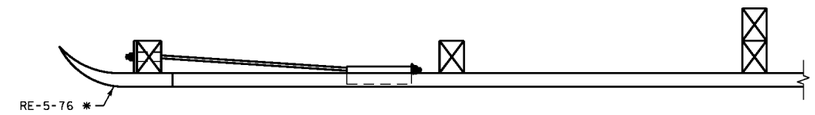

PLAN

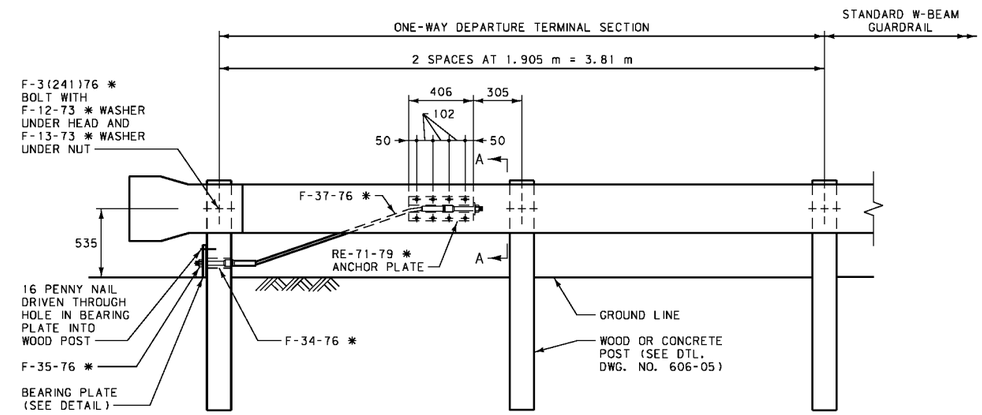

ELEVATION

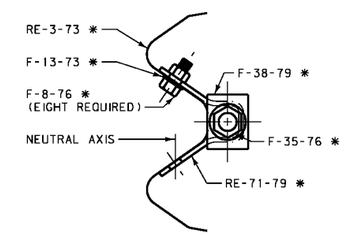

SECTION A-A

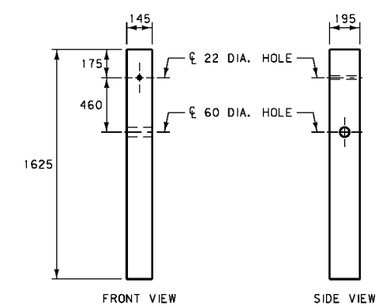

END POST DETAILS

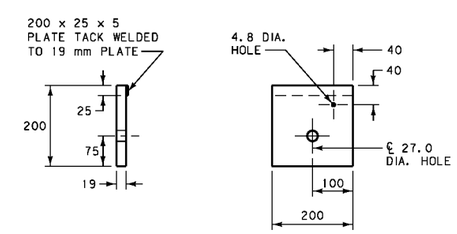

BEARING PLATE DETAIL

ALL DIMENSIONS ARE MILLIMETERS (mm) UNLESS OTHERWISE NOTED.

NOTE:
* SEE DTL. DWG. NO. 606-80 FOR SCHEDULE OF GUARDRAIL HARDWARE.

DETAILED DRAWING	
REFERENCE STANDARD SPEC. SECTION 606	DWG. NO. 606-18
ONE-WAY DEPARTURE TERMINAL SECTION	
EFFECTIVE: AUGUST 1999	
MDT MONTANA DEPARTMENT OF TRANSPORTATION	MONTANA CADD

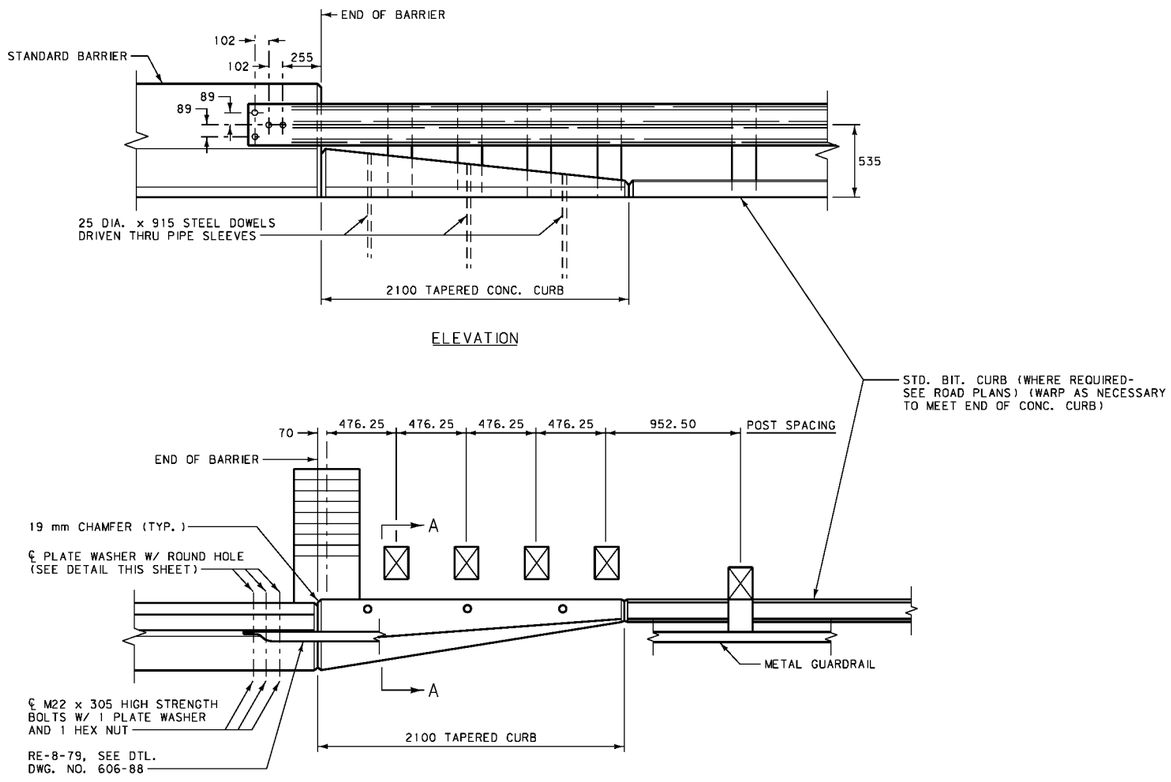

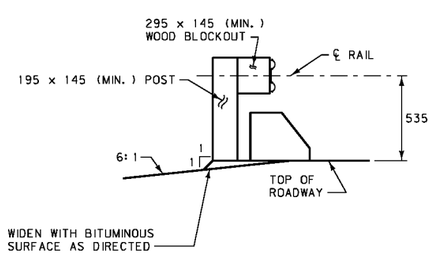

DETAIL "A"

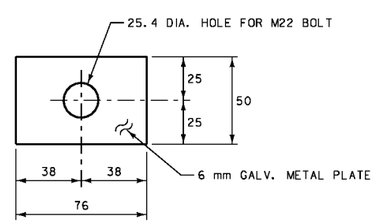

NOTES:

TAPERED CONCRETE CURBS:
TYPE 1, SEE DTL. DWG. NO. 606-26
TYPE 3, SEE DTL. DWG. NO. 606-27

CURB TAPERS ARE NOT REQUIRED WHEN EXISTING APPROACH SLABS ARE IN PLACE.

PORTIONS OF GUARDRAIL & BLOCKOUTS ARE OMITTED FOR CLARITY.

LAP GUARDRAIL IN THE DIRECTON OF THE ADJACENT TRAFFIC LANE. (SEE DTL. DWG. NO. 606-05.)

DO NOT FLARE BRIDGE APPROACH SECTIONS.

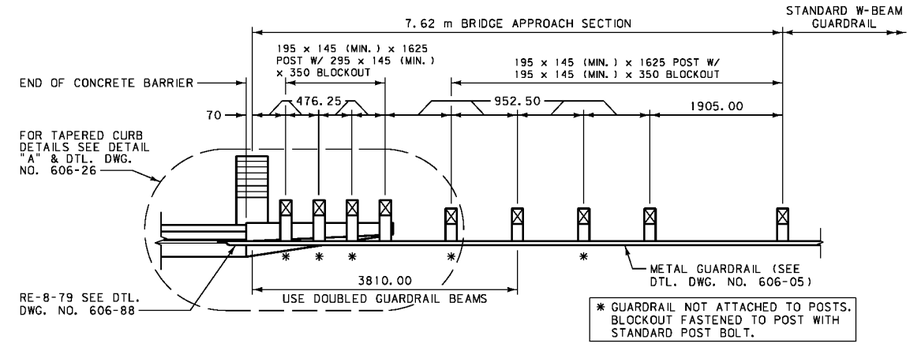

METAL GUARDRAIL-BRIDGE APPROACH SECTION TYPE 1
(FOR BRIDGES USING CONCRETE BARRIER RAIL)

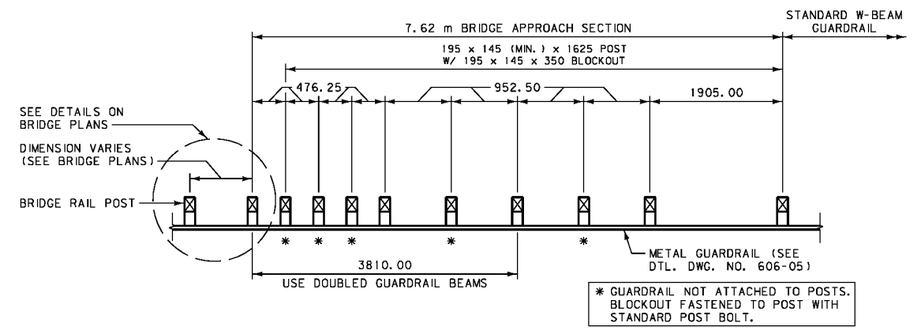

METAL GUARDRAIL-BRIDGE APPROACH SECTION TYPE 2
(FOR BRIDGES WITHOUT CURBS)

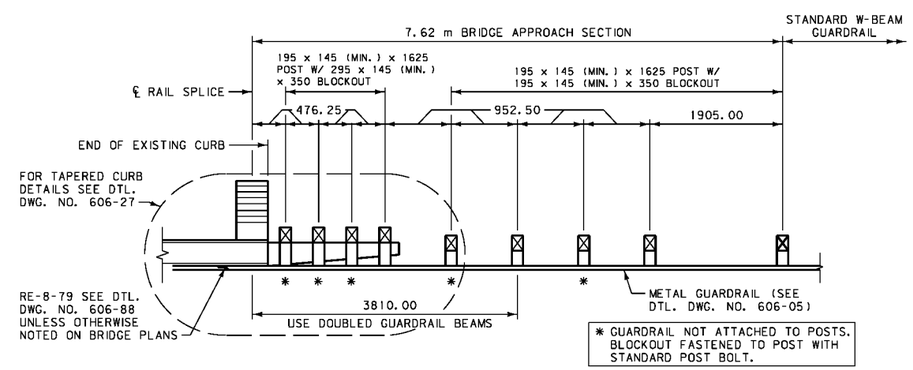

METAL GUARDRAIL-BRIDGE APPROACH SECTION TYPE 3
(FOR BRIDGES WITH EXISTING CONCRETE CURBS)

ALL DIMENSIONS ARE MILLIMETERS (mm) UNLESS OTHERWISE NOTED.

DETAILED DRAWING	
REFERENCE STANDARD SPEC. SECTION 606	DWG. NO. 606-25
BRIDGE APPROACH SECTIONS	
EFFECTIVE: AUGUST 1999	

MDT MONTANA DEPARTMENT OF TRANSPORTATION — MONTANA CADD

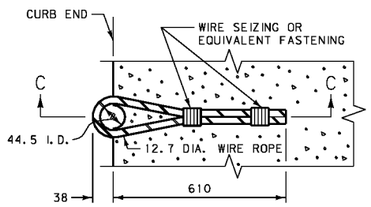

WIRE ROPE DETAIL

BILL OF REINFORCING STEEL (ONE SECTION ONLY)

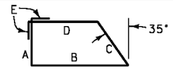

TYPE I

BENT BARS (ALL DIMENSIONS ARE OUT TO OUT)

MARK	SIZE	NO.	TYPE	LENGTH	A	B	C	D	E
C1	#13	1	1	1360	270	395	330	205	80
C2				1225	240	350	290	185	
C3				1090	205	310	255	160	
C4				955	175	265	215	140	
C5				820	145	220	175	120	
C6				695	115	180	140	100	
C7				555	80	135	100	80	
C8		1	1	415	50	90	60	55	80
B1	#13	4	STRAIGHT	2020	~	~	~	~	~

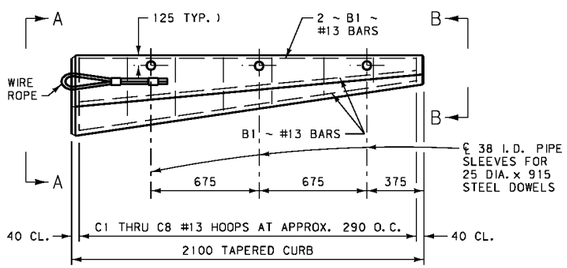

PLAN

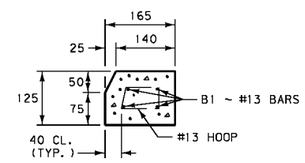

VIEW B-B

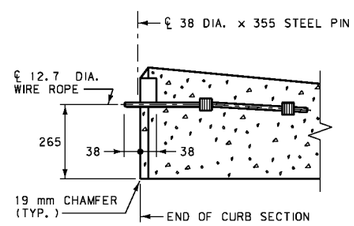

SECTION C-C

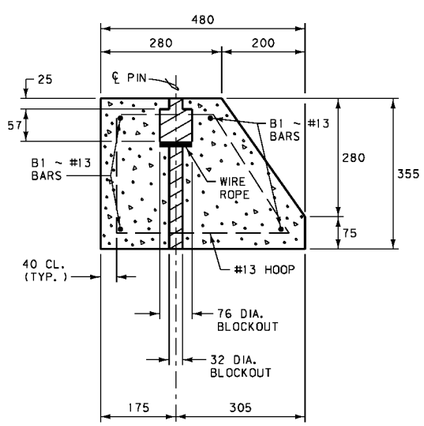

VIEW A-A

NOTES:

TAPERED CONCRETE CURB IS USED WITH BRIDGE APPROACH SECTION TYPE 1 (SEE DTL. DWG. NO. 606-25).

WIRE ROPE CONSISTS OF ZINC-COATED STEEL WIRE 7 STRAND UTILITY GRADE WITH A MINIMUM BREAKING STRENGTH OF 111.2 kN, COMFORMING TO ASTM SPECIFICATION A 475.

ALL REINFORCING STEEL IS OF THE DEFORMED TYPE, MEETING THE REQUIREMENTS OF AASHTO M 31M (ASTM A 615M, GRADE 420).

ALL CONCRETE IS CLASS "DD".
TOTAL CONCRETE PER 2100 mm TAPERED CURB EST. = 0.17 m³.
TOTAL REBAR WEIGHT PER 2100 mm TAPERED CURB EST. = 15.1 kg.

ALL DIMENSIONS ARE MILLIMETERS (mm) UNLESS OTHERWISE NOTED.

DETAILED DRAWING

REFERENCE STANDARD SPEC. SECTION 606	DWG. NO. 606-26

TAPERED CONCRETE CURB DETAIL

EFFECTIVE: AUGUST 1999

MDT MONTANA DEPARTMENT OF TRANSPORTATION — MONTANA CADD

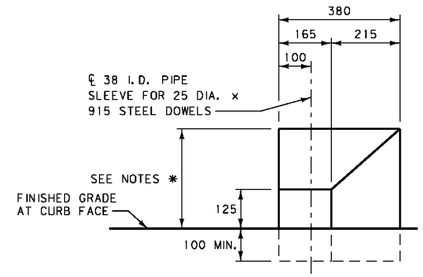

END VIEW

BILL OF REINFORCING STEEL (ONE SECTION ONLY)

TYPE I

BENT BARS (ALL DIMENSIONS ARE OUT TO OUT)

MARK	SIZE	NO.	TYPE	LENGTH	A	B
C1	#13	1	1	390	150	90
C2				480	175	130
C3				570	200	170
C4				665	225	215
C5				755	250	255
C6		1	1	845	270	295
B1		4	STRAIGHT	1720	~	~
B2	#13	2	STRAIGHT	600	~	~

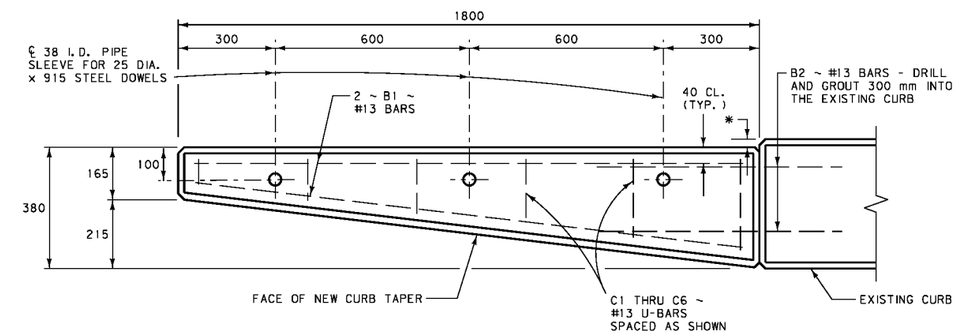

PLAN

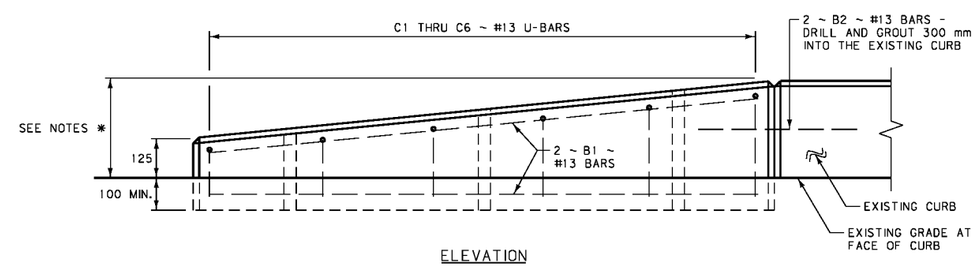

ELEVATION

NOTES:

REMOVE THE EXISTING SURFACE UNDER THE NEW CONCRETE CURB TAPERS AS APPROVED BY THE ENGINEER. EMBED THE CURB TAPER A MINIMUM OF 100 mm BELOW THE GRADE MEASURED AT THE INSIDE FACE OF THE TAPER.

ALL REINFORCING STEEL IS OF THE DEFORMED TYPE, MEETING THE REQUIREMENTS OF AASHTO M 31M (ASTM A 615M, GRADE 420).

ALL CONCRETE IS CLASS "DD".
TOTAL CONCRETE PER 1800 mm TAPERED CURB EST. = 0.16 m³.
TOTAL REBAR WEIGHT PER 1800 mm TAPERED CURB EST. = 11.7 kg.

TAPERED CONCRETE CURB IS USED WITH BRIDGE APPROACH SECTION TYPE 3 (SEE DTL. DWG. NO. 606-25).

✱ ADJUST DIMENSION TO MATCH EXISTING CURB.

ALL DIMENSIONS ARE MILLIMETERS (mm) UNLESS OTHERWISE NOTED.

DETAILED DRAWING

REFERENCE STANDARD SPEC. SECTION 606	DWG. NO. 606-27

TAPERED CONCRETE CURB DETAIL

EFFECTIVE: AUGUST 1999

MDT MONTANA DEPARTMENT OF TRANSPORTATION — MONTANA CADD

TERMINAL DETAILS						
POST	DISTANCE FROM ANCHOR	OFFSET FROM INSTALL. LINE	CABLE FASTENER			BASE PLATES
			TYPE	QUANTITY	DESCRIPTION	
5	12 800	0	F-1-76	3	HOOK BOLT	~
4	10 970	50	F-1-76	3	HOOK BOLT	~
3	9140	150	F-1-76	3	HOOK BOLT	~
2	7310	300	P-2-79	1	END CAP	P-2-79
1	5480	500	P-2-79	1	END CAP	P-2-79
ANCHOR	0	1220	THREE CABLE END ASSEMBLIES *			

SCHEDULE OF HARDWARE *		
DESIGNATION	DESCRIPTION	DTL. DWG. NO.
F-1-76	M8 HOOK BOLT	606-82
F-10(114)-79	M20 HEX BOLT & NUT & WASHER	606-82
P-1-76	STRUCTURAL SHAPE LINE POST (STEEL)	606-92
P-2-79	END POST FITTINGS	606-90
P-46-76	BENT PLATE LINE POST (STEEL)	606-92
RE-1-76	19.1 DIA. WIRE ROPE (3x7)	606-94

* SEE ARTBA TECHNICAL BULLETIN NO. 268-B (AGC STD. FORM NO. 131) "A GUIDE TO STANDARDIZED HIGHWAY BARRIER RAIL HARDWARE."

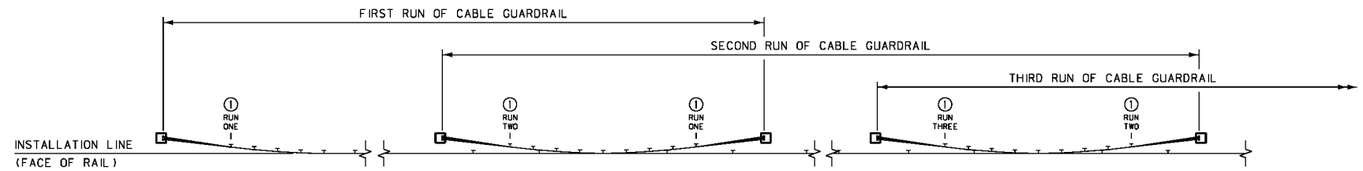

TYPICAL LAYOUT FOR MULTIPLE RUNS OF CABLE GUARDRAIL

EACH RUN OF CABLE GUARDRAIL CONTAINS TWO TERMINAL SECTIONS WITH ANCHOR ASSEMBLIES.

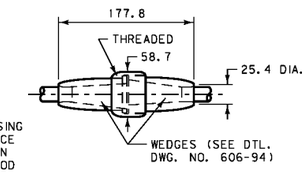

SPLICE CABLE USING A COUPLING DEVICE AS SHOWN, OR AN ALTERNATE METHOD APPROVED BY THE ENGINEER.

CABLE SPLICE

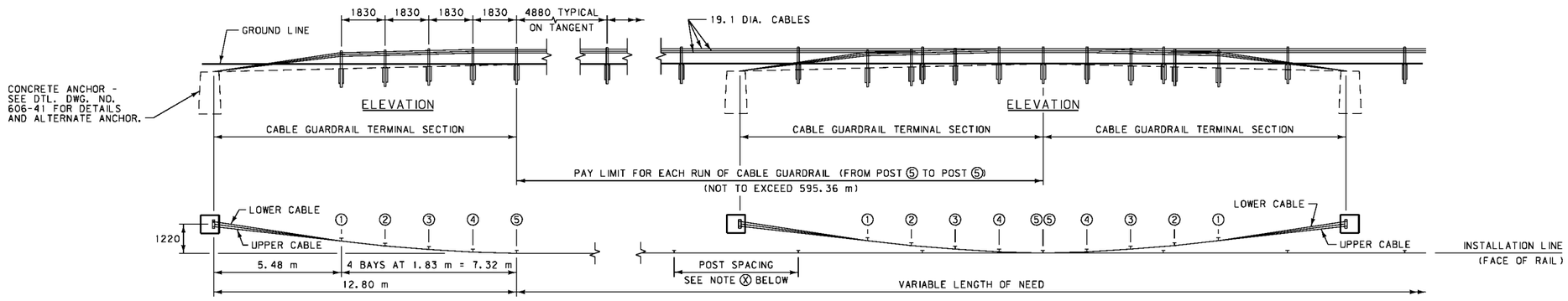

PLAN

NOTE:
EITHER LINE POST (STRUCTURAL SHAPE OR BENT PLATE) MAY BE USED THROUGH THE RUN, BUT USE ONLY STRUCTURAL SHAPE POSTS ON THE ENDS. MAINTAIN A CONSISTENT TYPE OF POST ON ALL RUNS OF CABLE RAIL FOR THE PROJECT.

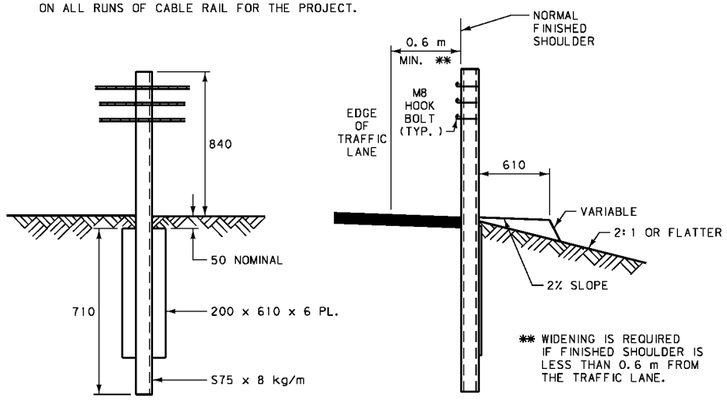

TYPICAL INSTALLATION DETAIL

INTERMEDIATE POST

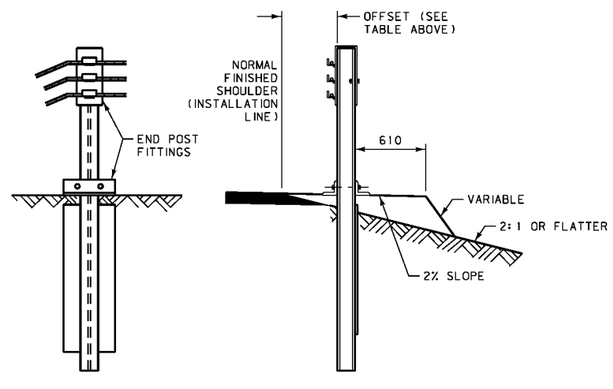

TYPICAL INSTALLATION DETAIL

END POSTS

NOTES:

FOR CABLE GUARDRAIL RUNS OF:
162.24 m OR LESS: USE COMPENSATING ASSEMBLY ON ONE END AND TURNBUCKLE END ASSEMBLY ON THE OTHER END OF EACH CABLE.
GREATER THAN 162.24 m, UP TO 620.96 m MAXIMUM: USE COMPENSATING END ASSEMBLY ON BOTH ENDS OF EACH CABLE.

SEE DTL. DWG. NO. 606-94 FOR TURNBUCKLE AND COMPENSATING END ASSEMBLY DETAILS.

ⓧ LINE POST SPACING:
TANGENTS AND CURVES WITH RADII 220 m AND GREATER: 4880 mm.
CURVES WITH RADII LESS THAN 220 m DOWN TO 70 m: 3660 mm.
NOTE: DO NOT INSTALL CABLE GUARDRAIL ON THE INSIDE SHOULDER OF ANY CURVE.

UNIFORMLY TENSION ALL CABLES TO COMPRESS SPRINGS BY 90 mm.

DO NOT INSTALL CABLE GUARDRAIL FOR OBSTACLES WITHIN 3.7 m OF THE INSTALLATION LINE.

DO NOT USE CABLE GUARDRAIL WITH FILL SLOPES STEEPER THAN 2:1, UNLESS THE DISTANCE BETWEEN THE BACK OF THE POSTS AND THE BREAK IN THE FILL SLOPE IS AT LEAST 2.5 m.

ALL DIMENSIONS ARE MILLIMETERS (mm) UNLESS OTHERWISE NOTED.

DETAILED DRAWING

REFERENCE STANDARD SPEC. SECTION 606

DWG. NO. 606-40

CABLE GUARDRAIL

EFFECTIVE: AUGUST 1999

MONTANA DEPARTMENT OF TRANSPORTATION

MONTANA CADD

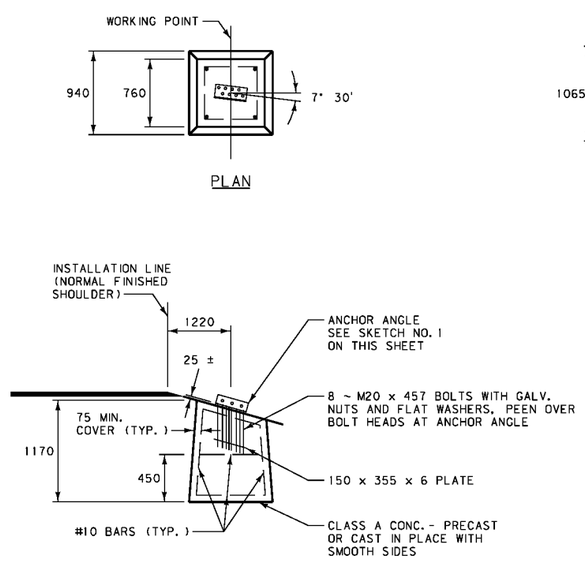

CONCRETE ANCHOR

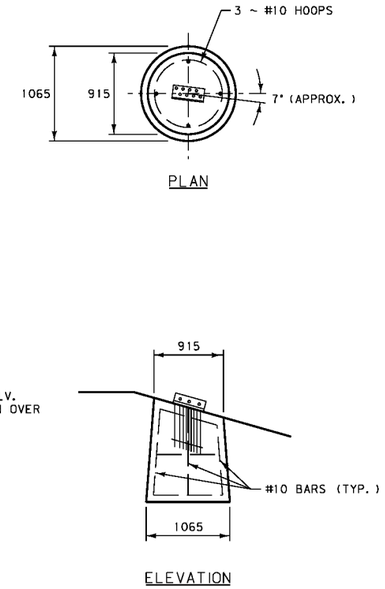

ALTERNATE CONCRETE ANCHOR
SIMILAR EXCEPT AS NOTED

TERMINAL AND INTERMEDIATE ANCHOR SYSTEMS

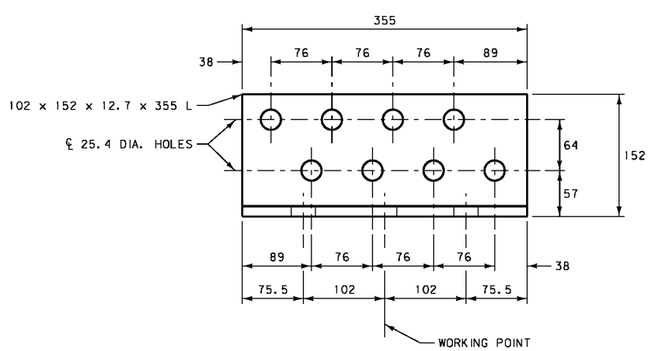

SKETCH NO. 1
ANCHOR ANGLE

ALL DIMENSIONS ARE MILLIMETERS (mm) UNLESS OTHERWISE NOTED.

DETAILED DRAWING	
REFERENCE STANDARD SPEC. SECTION 606	DWG. NO. 606-41
CABLE GUARDRAIL ANCHOR DETAILS	
EFFECTIVE: AUGUST 1999	
MDT MONTANA DEPARTMENT OF TRANSPORTATION	MONTANA CADD

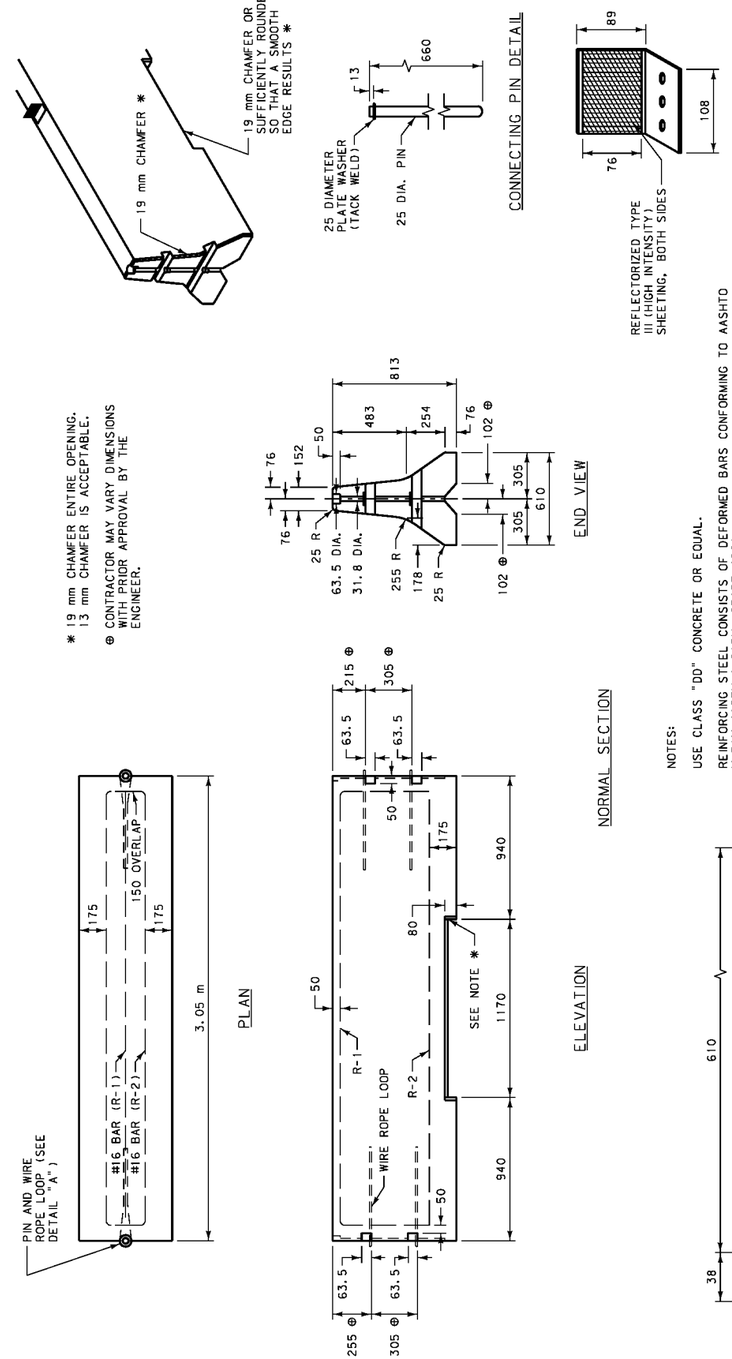

NOTES:

USE CLASS "DD" CONCRETE OR EQUAL.

REINFORCING STEEL CONSISTS OF DEFORMED BARS CONFORMING TO AASHTO M 31M (ASTM A 615M, GRADE 420).

CONNECT EACH 3050 mm SECTION WITH A 25 mm DIA. x 660 mm PIN.

PLACE NOTCHES ON BOTH ENDS OF EACH SECTION, AS SHOWN, TO FACILITATE EASY REMOVAL.

THE CONTRACTOR IS RESPONSIBLE FOR THE PROPER FIT-UP OF THE PRECAST CONCRETE MEDIAN BARRIER RAIL. ASSEMBLE AND PIN SUFFICIENT PRECAST SECTIONS IN THE FABRICATIONS PLANT TO DETERMINE THAT PROPER FIT-UP CAN BE MAINTAINED ON ALL ROADWAY ALIGNMENT, CURVES AS WELL AS ON TANGENT. THIS IS TO BE DETERMINED EARLY IN FABRICATION.

WIRE ROPE CONSISTS OF ZINC-COATED STEEL WIRE WITH MINIMUM BREAKING STRENGTH OF 71.2 kN.

CONNECTING PIN MUST CONFORM TO AASHTO M 227M (ASTM A 663M, GRADE 3107 OR BETTER AND NEED NOT BE PAINTED.

ATTACH REFLECTORS TO RAIL EVERY 9.15 METERS. FOLLOW THE MANUFACTURER'S SPECIFICATIONS FOR ADHESIVE MOUNTING.

ALL DIMENSIONS ARE MILLIMETERS (mm) UNLESS OTHERWISE NOTED.

DETAILED DRAWING	
REFERENCE STANDARD SPEC. SECTION 554, 606	DWG. NO. 606-44
CONCRETE MEDIAN BARRIER RAIL	
EFFECTIVE: AUGUST 1999	
MDT MONTANA DEPARTMENT OF TRANSPORTATION	MONTANA CADD

This Frame left blank

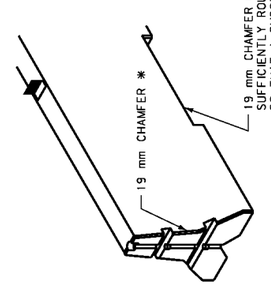

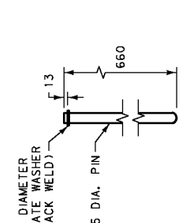

CONNECTING PIN DETAIL

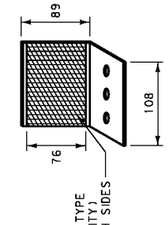

REFLECTOR
(SEE NOTES)

ALL DIMENSIONS ARE MILLIMETERS (mm) UNLESS OTHERWISE NOTED.

DETAILED DRAWING	
REFERENCE STANDARD SPEC. SECTION 554, 606	DWG. NO. 606-45
ALTERNATE CONCRETE MEDIAN BARRIER RAIL	
EFFECTIVE: AUGUST 1999	MONTANA DEPARTMENT OF TRANSPORTATION — MONTANA CADD

* 19 mm CHAMFER ENTIRE OPENING. 13 mm CHAMFER IS ACCEPTABLE.

⊕ CONTRACTOR MAY VARY DIMENSIONS WITH PRIOR APPROVAL BY THE ENGINEER.

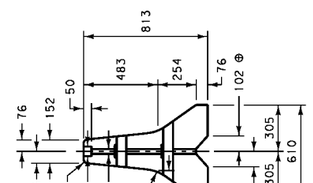

END VIEW

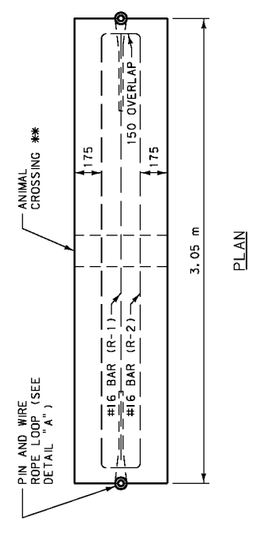

PLAN

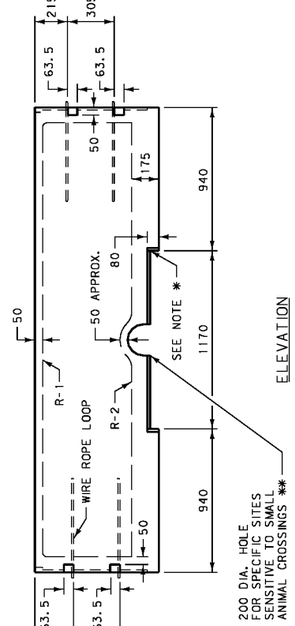

ELEVATION

NORMAL SECTION

NOTES:

USE CLASS "DD" CONCRETE OR EQUAL.

REINFORCING STEEL CONSISTS OF DEFORMED BARS CONFORMING TO AASHTO M 31M (ASTM A 615M, GRADE 420).

CONNECT EACH 3050 mm SECTION WITH A 25 mm DIA. x 660 mm PIN.

PLACE NOTCHES ON BOTH ENDS OF EACH SECTION, AS SHOWN, TO FACILITATE EASY REMOVAL.

THE CONTRACTOR IS RESPONSIBLE FOR THE PROPER FIT-UP OF THE PRECAST CONCRETE MEDIAN BARRIER RAIL ASSEMBLE AND PIN SUFFICIENT PRECAST SECTIONS IN THE FABRICATIONS PLANT TO DETERMINE THAT PROPER FIT-UP CAN BE MAINTAINED ON ALL ROADWAY ALIGNMENT, CURVES AS WELL AS ON TANGENT. THIS IS TO BE DETERMINED EARLY IN FABRICATION.

WIRE ROPE CONSISTS OF ZINC-COATED STEEL WIRE WITH MINIMUM BREAKING STRENGTH OF 71.2 kN.

CONNECTING PIN MUST CONFORM TO AASHTO M 227M (ASTM A 663M, GRADE 310) OR BETTER AND NEED NOT BE PAINTED.

ATTACH REFLECTORS TO RAIL EVERY 9.15 METERS. FOLLOW THE MANUFACTURER'S SPECIFICATIONS FOR ADHESIVE MOUNTING.

** USE THIS RAIL ON A CASE-BY-CASE BASIS AS SPECIFIED IN THE PLANS.

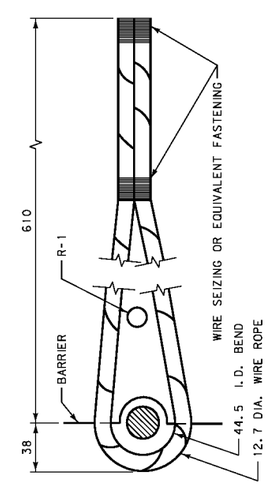

DETAIL "A"

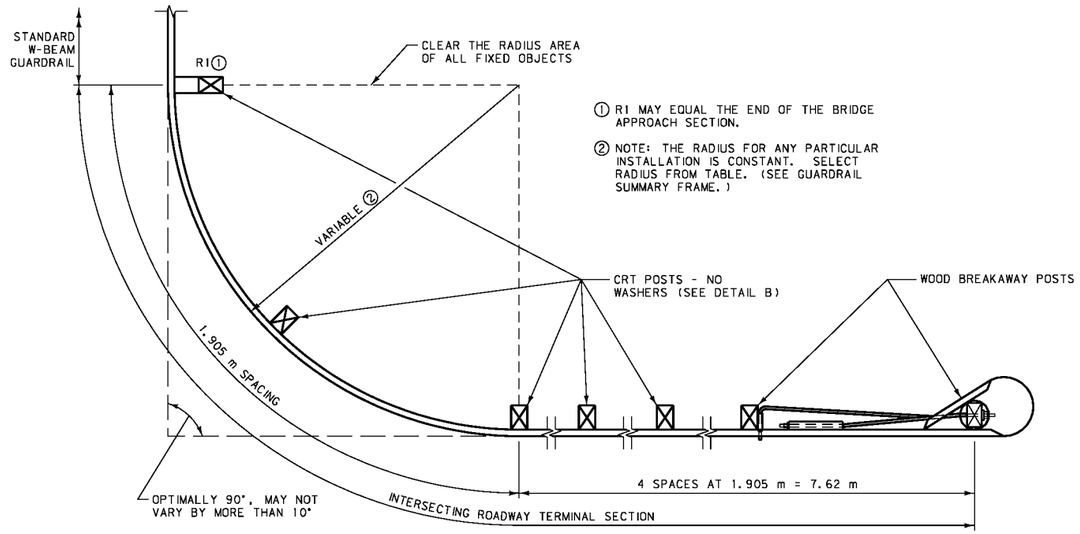

PLAN

RADIUS TABLE	
RADIUS	LENGTH OF BENT RAIL
2450	3.81 m
4850	7.62 m
7300	11.43 m
9700	15.24 m

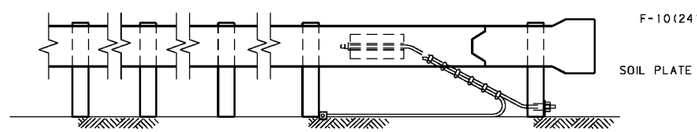

ELEVATION

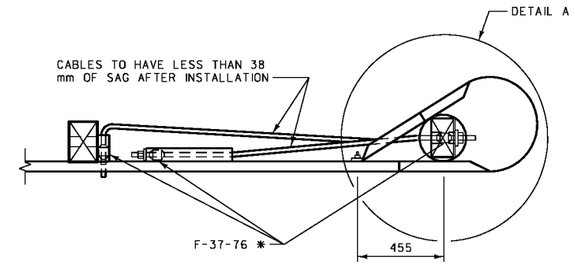

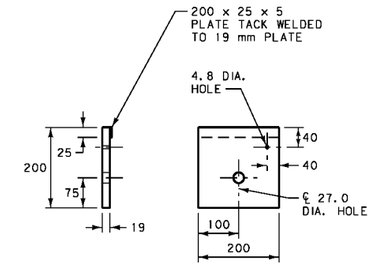

BEARING PLATE DETAIL

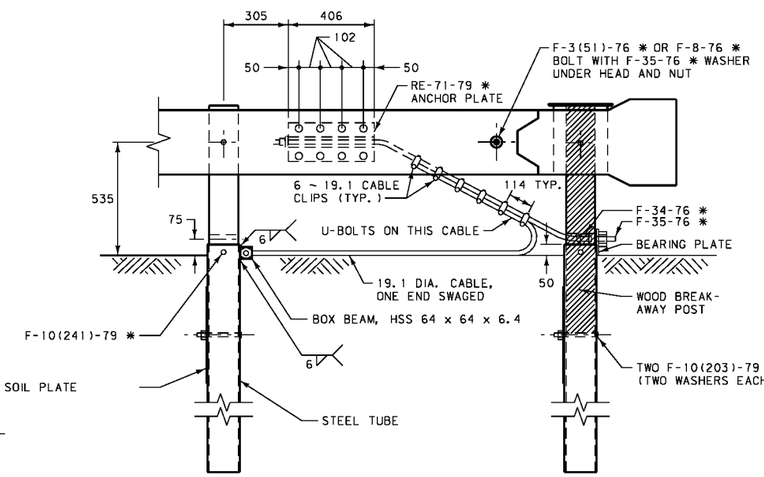

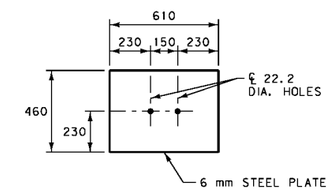

SOIL PLATE DETAIL

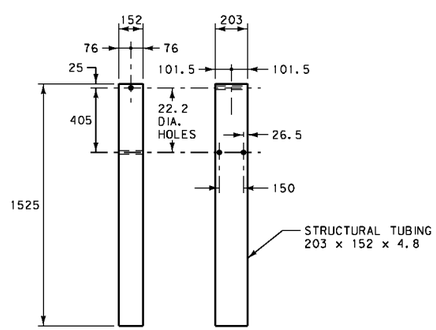

STEEL TUBE DETAILS

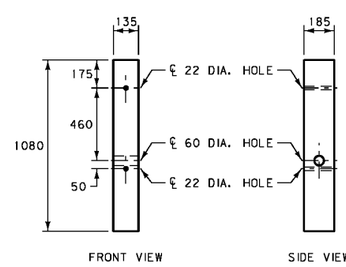

WOOD BREAKAWAY POST DETAILS

NOTES:

SEE DTL. DWG. NO. 606-05 FOR GUARDRAIL WIDENING REQUIREMENTS.

✱ SEE DTL. DWG. NO. 606-80 FOR SCHEDULE OF GUARDRAIL HARDWARE.

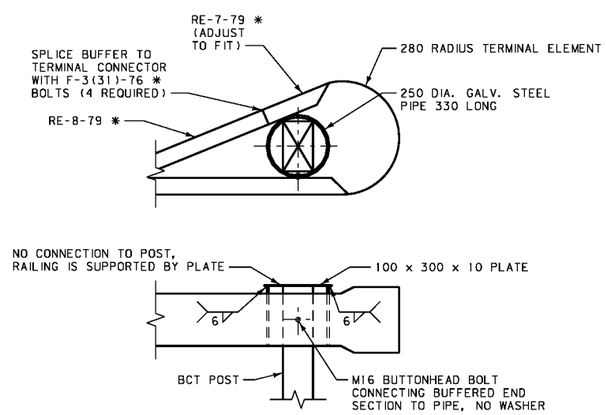

DETAIL A

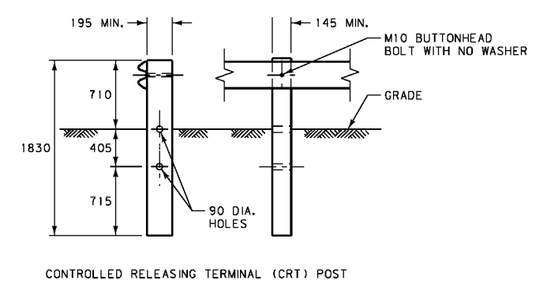

CONTROLLED RELEASING TERMINAL (CRT) POST

DETAIL B

ALL DIMENSIONS ARE MILLIMETERS (mm) UNLESS OTHERWISE NOTED.

DETAILED DRAWING	
REFERENCE STANDARD SPEC. SECTION 606	DWG. NO. 606-46
INTERSECTING ROADWAY TERMINAL SECTION	
EFFECTIVE: AUGUST 1999	

MDT MONTANA DEPARTMENT OF TRANSPORTATION — MONTANA CADD

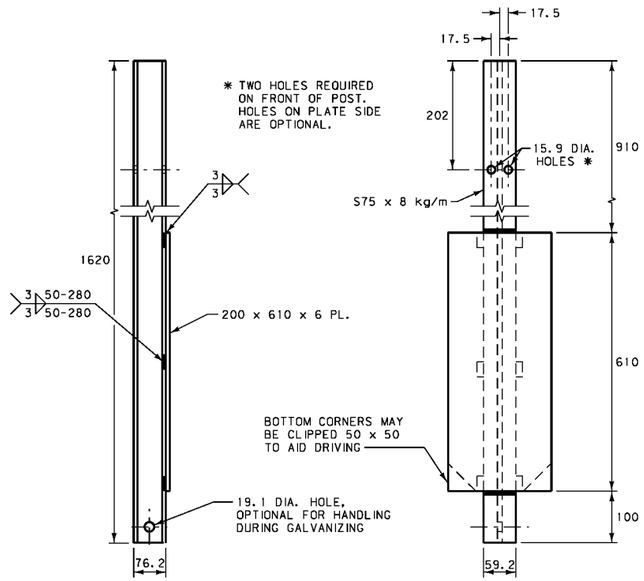

STRUCTURAL SHAPE POST (STEEL)

MODIFIED ARTBA P-4-76

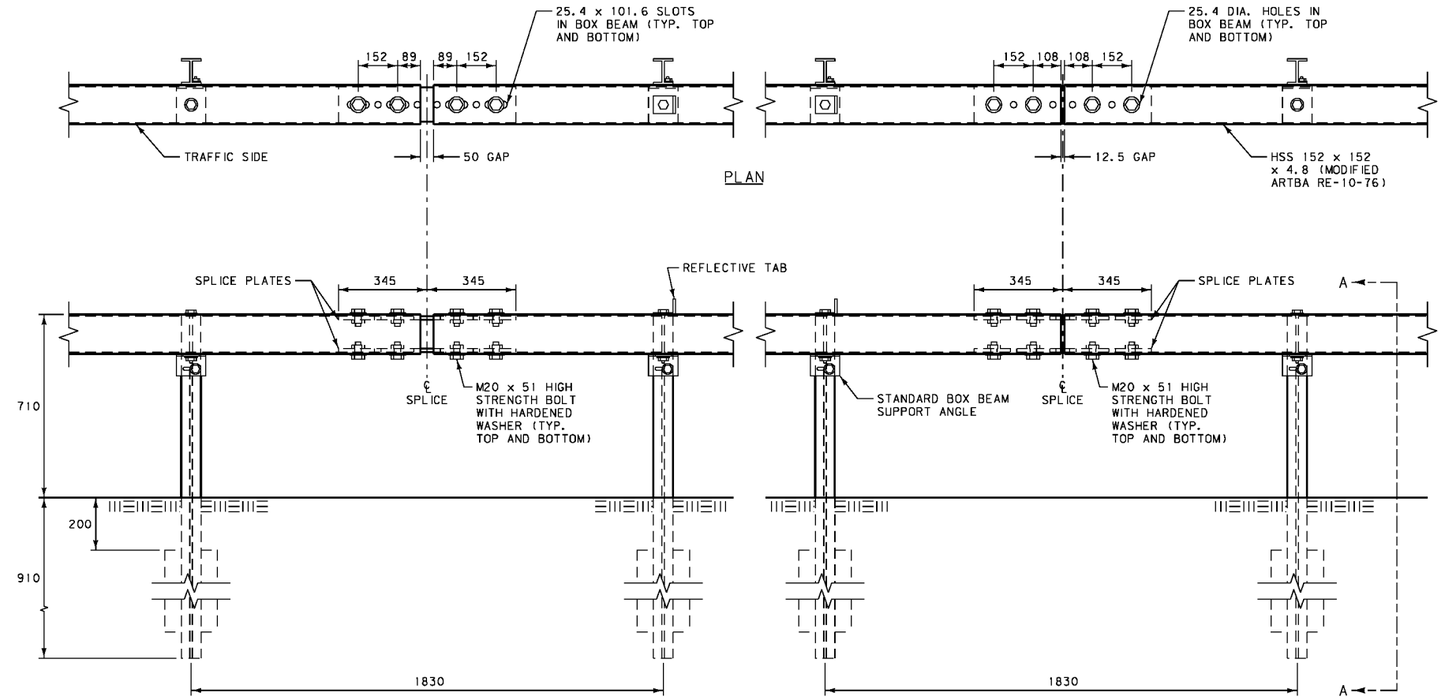

EXPANSION JOINT

SPLICE DETAIL

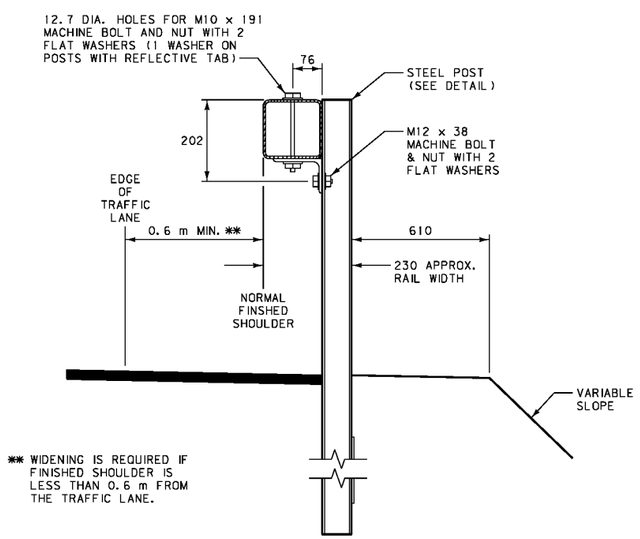

SECTION A-A

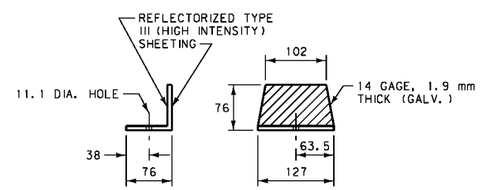

REFLECTIVE TAB

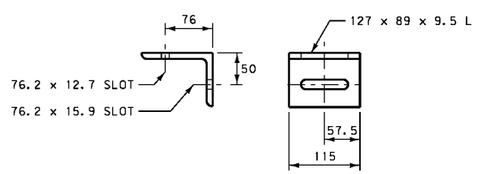

STANDARD BOX BEAM SUPPORT ANGLE

MODIFIED ARTBA P-5-76

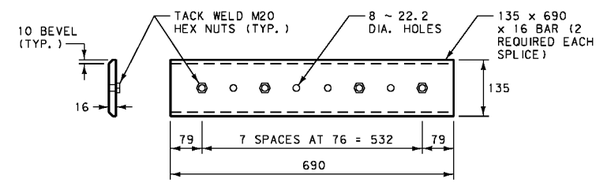

SPLICE PLATE

MODIFIED ARTBA RE-11-73

NOTES:

USE RAIL IN MINIMUM NOMINAL LENGTHS OF 5.49 m UNLESS APPROVED BY THE ENGINEER.

INSTALL EXPANSION JOINTS ON ALL BOX BEAM INSTALLATIONS GREATER THAN 90 m IN LENGTH AT INTERVALS NOT TO EXCEED 150 m.

ATTACH REFLECTIVE TABS TO EVERY FOURTH POST (7.32 m TYP.).

ALL DIMENSIONS ARE MILLIMETERS (mm) UNLESS OTHERWISE NOTED.

DETAILED DRAWING	
REFERENCE STANDARD SPEC. SECTION 606	DWG. NO. 606-50
BOX BEAM GUARDRAIL	
EFFECTIVE: AUGUST 1999	

MDT MONTANA DEPARTMENT OF TRANSPORTATION — MONTANA CADD

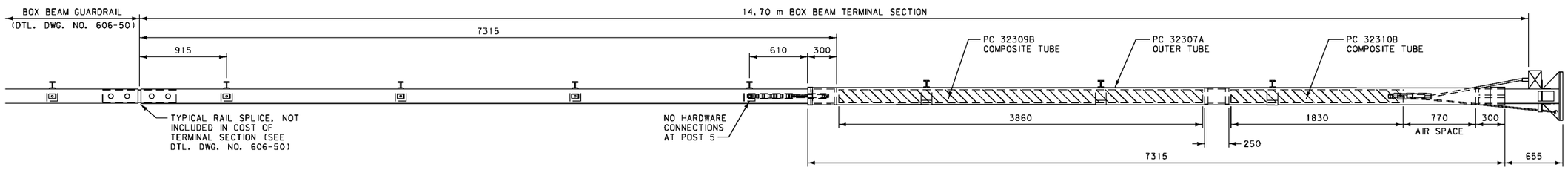

PLAN

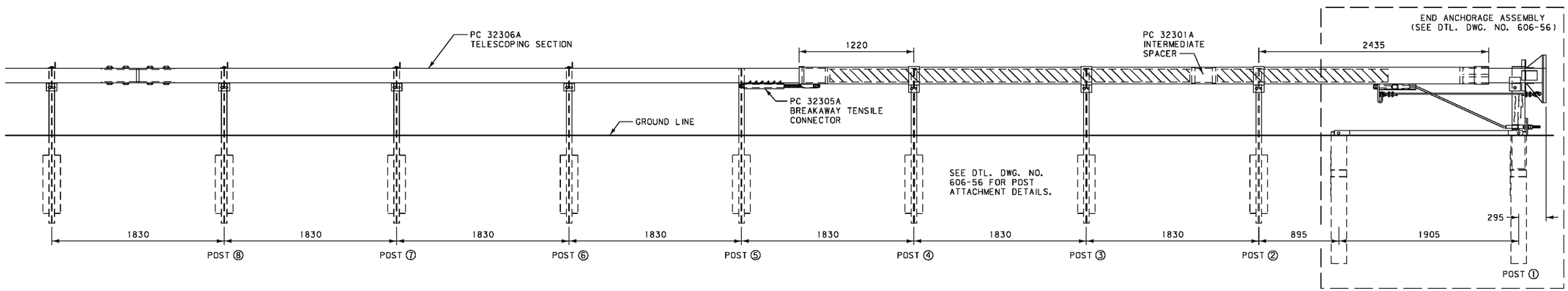

ELEVATION

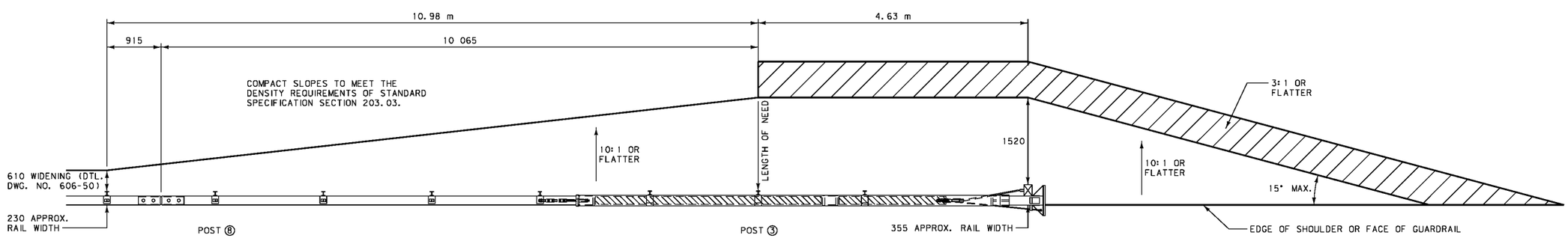

GUARDRAIL WIDENING

NOTES:

PLACE A SELF-ADHESIVE OBJECT MARKER ON THE FACE OF THE NOSE ASSEMBLY, HAVING ALTERNATING RETRO-REFLECTIVE BLACK AND YELLOW STRIPES SLOPED DOWNWARD AT AN ANGLE OF 45° TOWARDS THE SIDE ON WHICH TRAFFIC IS TO PASS.

DO NOT FLARE THE WY-BET TERMINAL SECTION.

ALL DIMENSIONS ARE MILLIMETERS (mm) UNLESS OTHERWISE NOTED.

DETAILED DRAWING	
REFERENCE STANDARD SPEC. SECTION 606	DWG. NO. 606-55
WY-BET BOX BEAM TERMINAL SECTION	
EFFECTIVE: AUGUST 1999	

MDT MONTANA DEPARTMENT OF TRANSPORTATION — MONTANA CADD

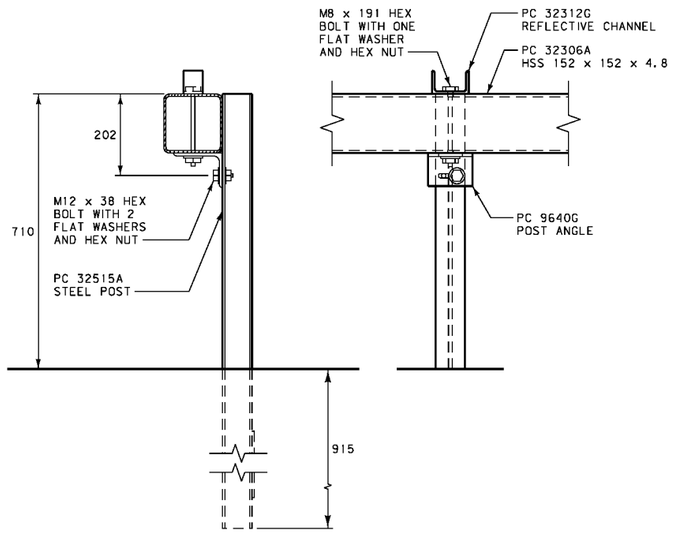

POST ATTACHMENT DETAIL
(TYP. AT POSTS 6, 7 AND 8)

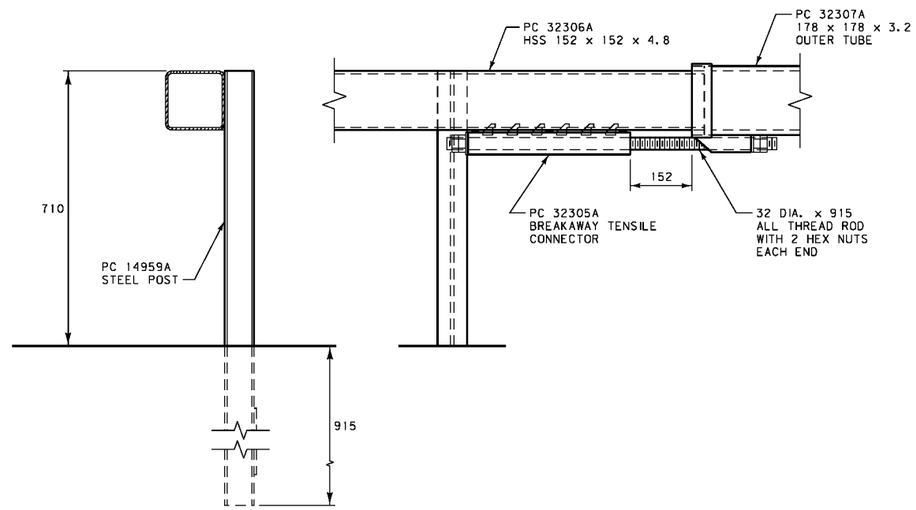

POST ATTACHMENT DETAIL
(POST 5)

BILL OF MATERIAL		
PC	QTY	DESCRIPTION
706G	1	PIPE SLEEVE, 50 DIA. x 150
721G	1	PLATE WASHER, 75 x 100 x 10
722G	1	NOSE RESTRAINT CABLE BRACKET
736G	2	STEEL TUBE, 152 x 203 x 1525
766G	2	SOIL PLATE, 460 x 610 x 6
774A	1	SLOTTED BEARING PLATE
3000G	1	CABLE ASSEMBLY
3148G	2	6 DIA. x 51 LAG SCREW
3240G	3	M8 ROUND WASHER
3245G	3	M8 HEX NUT
3254G	3	10 DIA. x 38 LAG SCREW
3255G	5	M10 ROUND WASHER
3264G	2	10 DIA. x 127 LAG SCREW
3350G	4	M16 HEX NUT
3478G	4	M16 x 191 HEX BOLT
3700G	4	M20 ROUND WASHER
3710G	2	M20 HEX NUT
4044G	4	32 DIA. HEX NUT
4066B	1	WOOD POST, 150 x 200 x 1080
4106B	3	RUBBER PAD, 38.1 x 88.9 x 101.6
4192G	4	6.4 mm CABLE CLAMP
4300G	18	M12 ROUND WASHER
4303G	9	M12 HEX NUT
4308G	9	M12 x 38 HEX BOLT
4719G	2	M20 x 254 HEX BOLT
4902G	2	M24 ROUND WASHER
4903G	4	M24 HEX NUT
5044G	1	AIRCRAFT CABLE, 6.4 DIA. x 2080
5092G	2	6.4 mm AIRCRAFT CABLE THIMBLE
5188G	3	M8 x 191 HEX BOLT
5423G	1	32 DIA. x 915 ALL THREAD ROD
9640G	3	POST ANGLE, 127 x 89 x 9.5 x 115
9641G	3	SHELF ANGLE, 115 x 3.2 x 486
9642G	1	SHELF ANGLE, 115 x 3.2 x 283
9852A	1	STRUT AND YOKE ASSEMBLY
14959A	1	1625 mm STEEL POST
32300A	1	WY-BET NOSE ASSEMBLY
32301A	1	HSS 152 x 152 x 250 INTERMEDIATE SPACER
32305A	1	BREAKAWAY TENSILE CONNECTOR
32306A	1	HSS 152 x 152 x 4.8 TELESCOPING SECTION
32307A	1	OUTER TUBE
32309B	1	152.4 O.D. x 6.4 x 3860 COMPOSITE TUBE
32310B	1	152.4 O.D. x 3.2 x 1830 COMPOSITE TUBE
32312G	3	REFLECTOR CHANNEL
32515A	6	1625 mm STEEL POST

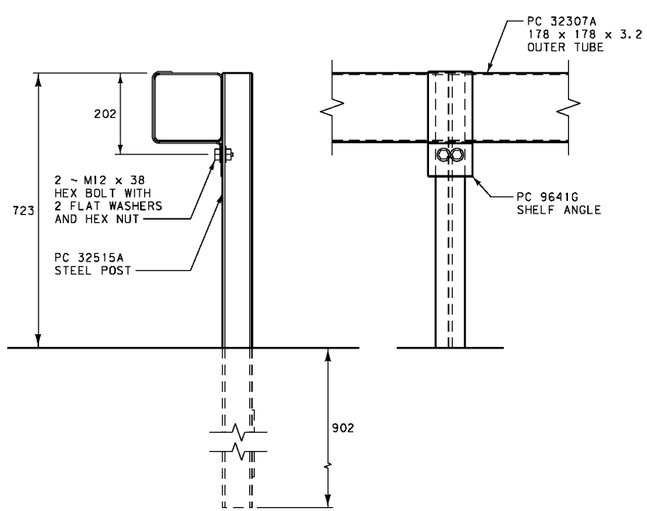

POST ATTACHMENT DETAIL
(TYP. AT POSTS 2, 3 AND 4)

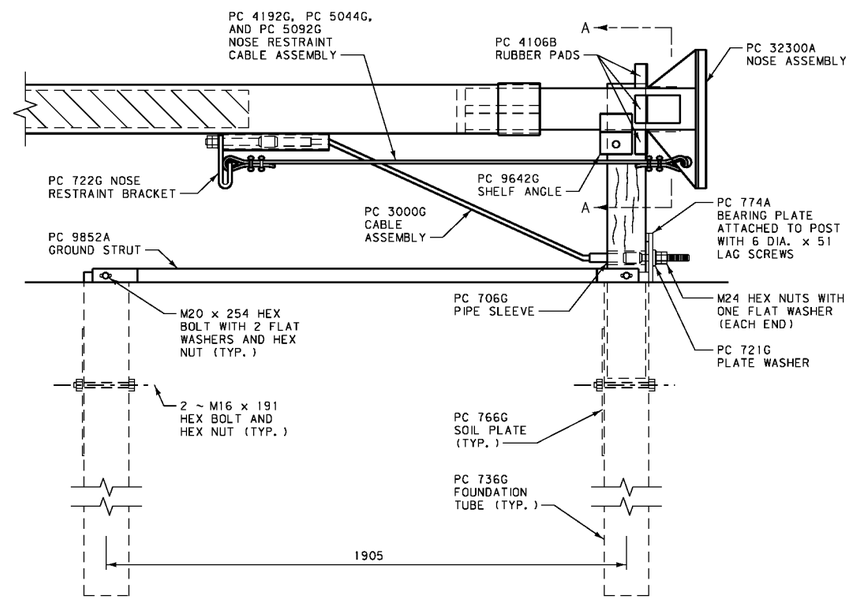

END ANCHORAGE ASSEMBLY

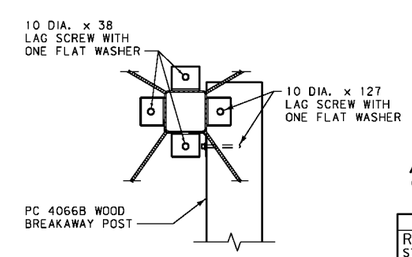

SECTION A-A

ALL DIMENSIONS ARE MILLIMETERS (mm) UNLESS OTHERWISE NOTED.

DETAILED DRAWING

REFERENCE STANDARD SPEC. SECTION 606

DWG. NO. 606-56

WY-BET BOX BEAM TERMINAL SECTION DETAILS

EFFECTIVE: AUGUST 1999

MDT MONTANA DEPARTMENT OF TRANSPORTATION — MONTANA CADD

SCHEDULE OF HARDWARE *

DESIGNATION	DESCRIPTION	DTL. DWG. NO.
F-1-76	M8 HOOK BOLTS	606-82
F-3( )-76	M16 BUTTONHEAD BOLT AND NUT	606-82
F-8-76	M16 HEX BOLT AND NUT	606-82
F-10( )-79	M20 HEX BOLT AND NUT	606-82
F-12-73	RECTANGULAR PLATE WASHER	606-84
F-13-73	STEEL WASHER FOR M16 BOLT	606-84
F-34-76	PIPE SLEEVE	606-84
F-35-76	STEEL WASHER AND NUT FOR M24 BOLT	606-84
F-37-76	CABLE ASSEMBLY	606-86
F-38-79	END PLATE	606-84
P-1-76	STRUCTURAL SHAPE LINE POST (STEEL)	606-92
P-2-79	END POST FITTINGS	606-90
P-46-76	BENT PLATE LINE POST (STEEL)	606-92
RE-1-76	19.1 DIA. WIRE ROPE (3 x 7)	606-94
RE-3-73	W-BEAM	606-88
RE-5-76	W-BEAM END SECTION (FLARED)	606-88
RE-7(610)-79	W-BEAM END SECTION (BUFFER)	606-88
RE-8-79	W-BEAM TERMINAL CONNECTOR	606-88
RE-71-79	ANCHOR PLATE	606-86

* SEE ARTBA TECHNICAL BULLETIN NO. 268-B (AGC STANDARD FORM NO. 131) "A GUIDE TO STANDARDIZED HIGHWAY BARRIER RAIL HARDWARE."

ALL DIMENSIONS ARE MILLIMETERS (mm) UNLESS OTHERWISE NOTED.

DETAILED DRAWING

REFERENCE STANDARD SPEC. SECTION 606 — DWG. NO. 606-80

SCHEDULE OF GUARDRAIL HARDWARE

EFFECTIVE: AUGUST 1999

MDT MONTANA DEPARTMENT OF TRANSPORTATION — MONTANA CADD

NOTE:
NUTS ARE OF THE HEAVY HEX TYPES. INSTALL BOLTS TO DEVELOP AN ULTIMATE PULL OPEN STRENGTH FROM 2225 N TO 4450 N APPLIED IN A DIRECTION NORMAL TO THE LONGITUDINAL AXIS OF THE POST.

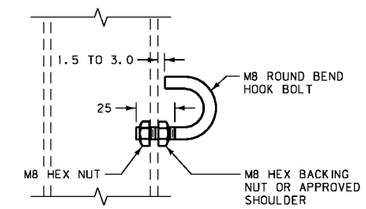

M8 HOOK BOLT

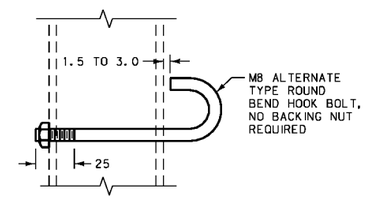

ALTERNATE M8 HOOK BOLT

F-1-76

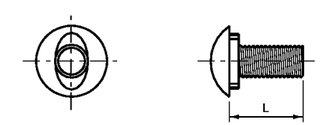

M16 OVAL SHOULDERED BUTTONHEAD BOLT

L	THREAD LENGTH
31	FULL
51	38 MIN.
241	44 MIN.
457	63 MIN.
635	51 MIN.

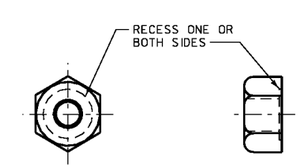

M16 RECESS NUT

F-3( )-76

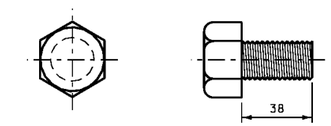

M16 HEX BOLT

M16 HEX NUT

F-8-76

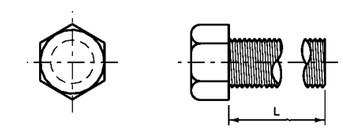

M20 HEX BOLT

L	THREAD LENGTH
38	FULL
114	51
191	51
241	51

M20 HEX NUT

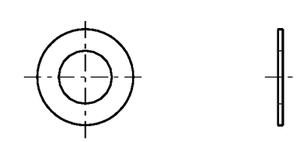

STEEL WASHER FOR M20 BOLT

F-10( )-79

ALL DIMENSIONS ARE MILLIMETERS (mm) UNLESS OTHERWISE NOTED.

DETAILED DRAWING

REFERENCE STANDARD SPEC. SECTION 606 — DWG. NO. 606-82

GUARDRAIL HARDWARE

EFFECTIVE: AUGUST 1999

MDT MONTANA DEPARTMENT OF TRANSPORTATION — MONTANA CADD

NOTE:
CONFORM WASHER TO THE REQUIREMENTS OF AASHTO M 180.

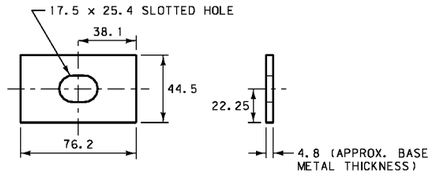

RECTANGULAR PLATE WASHER

F-12-73

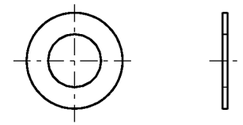

STEEL WASHER FOR M16 BOLT

F-13-73

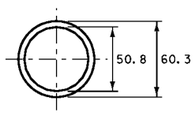

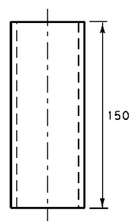

NOTE:
SLEEVE CONSISTS OF 50 mm GALVANIZED STANDARD PIPE, CONFORMING TO THE REQUIREMENTS OF ASTM A 53.

POST SLEEVE

F-34-76

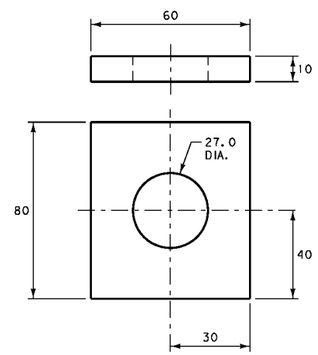

NOTE:
END PLATES ARE TO CONFORM TO THE REQUIREMENTS OF ASTM A 36M AND BE GALVANIZED IN ACCORDANCE WITH AASHTO M 111 (ASTM A 123M).

END PLATE

F-38-79

M24 HEX NUT

NOTE:

NUTS ARE TO CONFORM TO THE REQUIREMENTS OF ASTM A 325M AND WASHERS ARE TO BE MADE OF STEEL; GALVANIZE BOTH IN ACCORDANCE WITH AASHTO M 232M (ASTM A 153M). AFTER GALVANIZING, THE PITCH DIAMETER OF THE NUT MAY BE TAPPED 0.6 mm OVER THE ANSI CLASS 2B TOLERANCE.

WASHERS ARE TO MEET THE DIMENSIONAL REQUIREMENTS OF ANSI B27.2 TYPE A PLAIN WASHERS. NO PUNCHING, DRILLING OR CUTTING IS PERMITTED AFTER GALVANIZING.

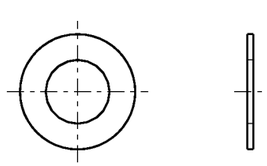

STEEL WASHER FOR M24 BOLT

F-35-76

ALL DIMENSIONS ARE MILLIMETERS (mm) UNLESS OTHERWISE NOTED.

DETAILED DRAWING	
REFERENCE STANDARD SPEC. SECTION 606	DWG. NO. 606-84
GUARDRAIL HARDWARE	
EFFECTIVE: AUGUST 1999	
MDT MONTANA DEPARTMENT OF TRANSPORTATION — MONTANA CADD	

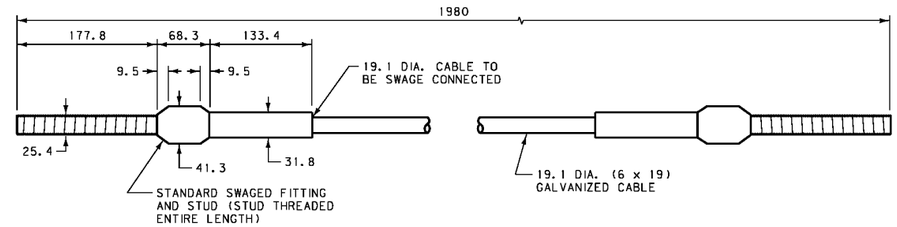

NOTES:

FOR RELATED FASTENER HARDWARE SEE F-35-76 AND F-38-79.

MACHINE THE SWAGED FITTING FROM HOT-ROLLED CARBON STEEL, CONFORMING TO THE REQUIREMENTS OF ASTM A 576, GRADE 1035, AND ANNEAL SUITABLE FOR COLD SWAGING. GALVANIZE THE SWAGED FITTING IN ACCORDANCE WITH ASTM A 123M BEFORE SWAGING. DRILL A LOCK PIN HOLE TO ACCOMMODATE A 6.4 mm, PLATED SPRING STEEL PIN THROUGH THE HEAD OF THE SWAGED FITTING TO RETAIN THE STUD IN THE PROPER POSITION. AFTER GALVANIZING THE HEAD MAY BE TAPPED 0.6 mm OVER THE ANSI CLASS 2B TOLERANCE.

THE STUD IS TO CONFORM TO THE REQUIREMENTS OF ASTM A 449 AND BE GALVANIZED IN ACCORDANCE WITH ASTM A 153M. THE THREADS MUST HAVE A CLASS 2A FIT BEFORE GALVANIZING. PRIOR TO GALVANIZING, MILL A 9.5 mm SLOT INTO THE STUD END FOR THE LOCKING PIN.

WIRE ROPE IS TO CONFORM TO THE REQUIREMENTS OF AASHTO M 30 AND BE 19.1 mm PREFORMED, 6 x 19, WIRE STRAND CORE OR INDEPENDENT WIRE ROPE CORE (IWRC), GALVANIZED, RIGHT REGULAR LAY, MANUFACTURED OF IMPROVED PLOW STEEL WITH A MINIMUM BREAKING STRENGTH OF 190.4 kN.

THE SWAGED FITTING, STUD AND NUT (F-35-76) MUST DEVELOP THE BREAKING STRENGTH OF THE WIRE ROPE.

CABLE ASSEMBLY

F-37-76

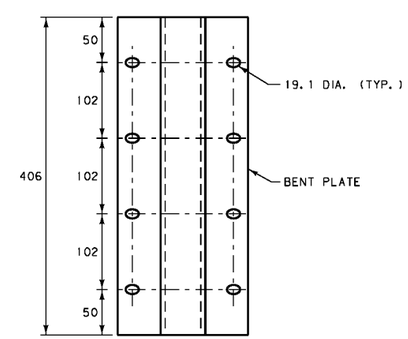

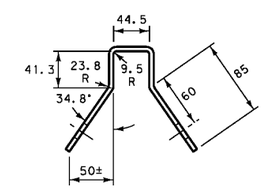

NOTES:

ANCHOR PLATES ARE TO CONFORM TO THE REQUIREMENTS OF AASHTO M 183M (ASTM A 36M) AND BE GALVANIZED IN ACCORDANCE WITH AASHTO M 111 (ASTM A 123M).

NO PUNCHING, DRILLING OR CUTTING IS PERMITTED AFTER GALVANIZING.

ANCHOR PLATE

RE-71-79

ALL DIMENSIONS ARE MILLIMETERS (mm) UNLESS OTHERWISE NOTED.

DETAILED DRAWING	
REFERENCE STANDARD SPEC. SECTION 606	DWG. NO. 606-86
GUARDRAIL HARDWARE	
EFFECTIVE: AUGUST 1999	
MDT MONTANA DEPARTMENT OF TRANSPORTATION — MONTANA CADD	

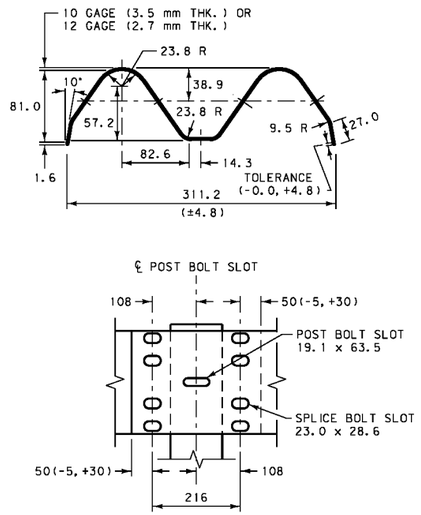

W-BEAM

RE-3-73

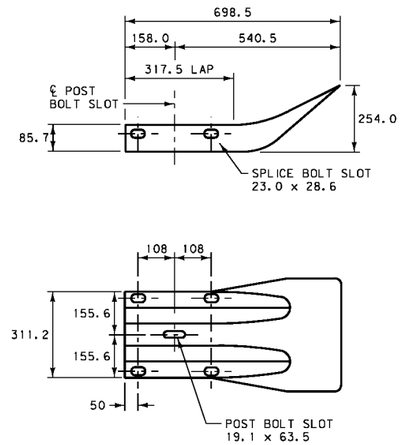

W-BEAM END SECTION (FLARED)

RE-5-76

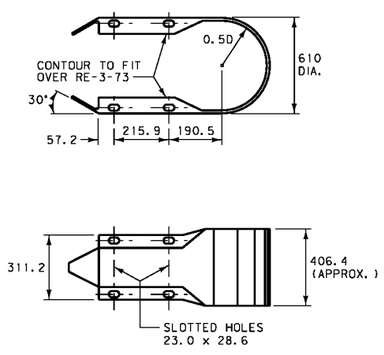

W-BEAM END SECTION (BUFFER)

RE-7(610)-79

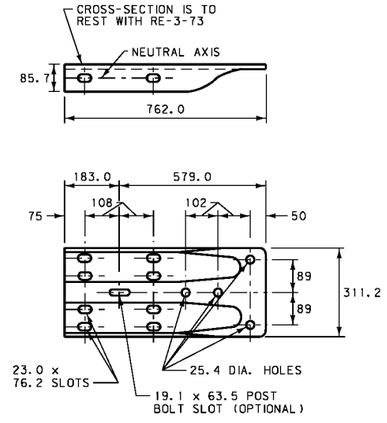

W-BEAM TERMINAL CONNECTOR

RE-8-79

ALL DIMENSIONS ARE MILLIMETERS (mm) UNLESS OTHERWISE NOTED.

DETAILED DRAWING	
REFERENCE STANDARD SPEC. SECTION 606	DWG. NO. 606-88
GUARDRAIL HARDWARE	
EFFECTIVE: AUGUST 1999	
MDT MONTANA DEPARTMENT OF TRANSPORTATION	MONTANA CADD

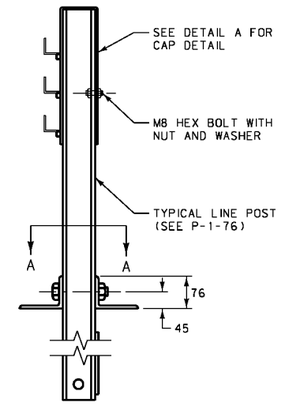

FITTINGS ON END POST

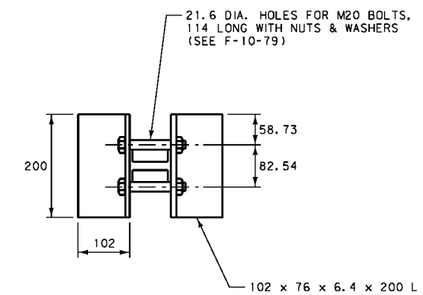

SECTION A-A

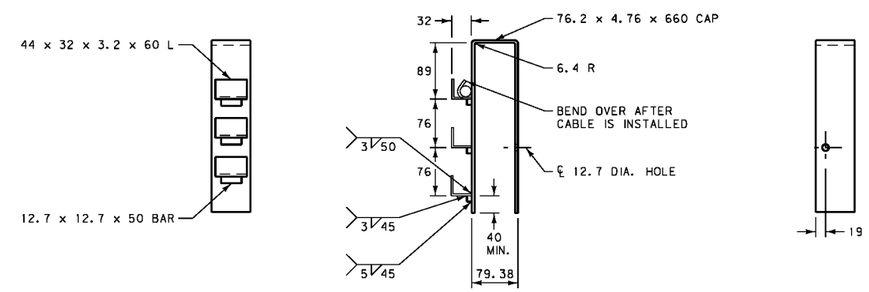

DETAIL A

END POST FITTINGS

P-2-79

NOTES:

ANGLES AND PLATES ARE TO CONFORM TO AASHTO M 183M (ASTM A 36M) AND BE GALVANIZED IN ACCORDANCE WITH AASHTO M 111 (ASTM A 123M).

BOLTS AND NUTS ARE TO CONFORM TO THE REQUIREMENTS OF ASTM A 307 AND A 563M, CLASS A OR BETTER, RESPECTIVELY. WASHERS ARE MADE OF STEEL, MEETING THE DIMENSIONAL REQUIREMENTS OF ANSI B27.2 TYPE A NARROW WASHER. GALVANIZE BOLTS, NUTS AND WASHERS IN ACCORDANCE WITH ASTM A 153M.

WELDING IS TO CONFORM TO THE CURRENT REQUIREMENTS OF THE AMERICAN WELDING SOCIETY STRUCTURAL WELDING CODE, A.W.S. D1.1.

NO PUNCHING, DRILLING, CUTTING OR WELDING IS PERMITTED AFTER GALVANIZING.

ALL DIMENSIONS ARE MILLIMETERS (mm) UNLESS OTHERWISE NOTED.

DETAILED DRAWING	
REFERENCE STANDARD SPEC. SECTION 606	DWG. NO. 606-90
CABLE GUARDRAIL HARDWARE	
EFFECTIVE: AUGUST 1999	
MDT MONTANA DEPARTMENT OF TRANSPORTATION	MONTANA CADD

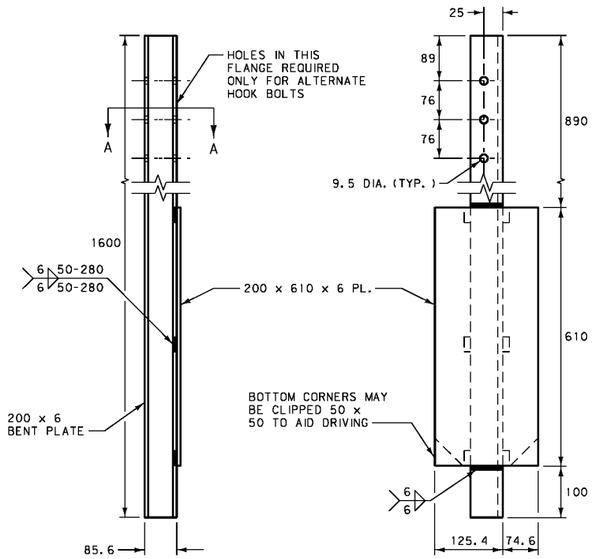

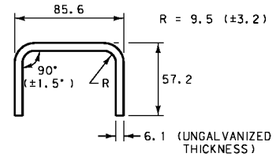

SECTION A-A

NOTES:

POSTS AND POST PLATES ARE TO CONFORM TO THE MECHANICAL REQUIREMENTS OF AASHTO M 183M (ASTM A 36M) AND BE WELDED TO MEET THE CURRENT REQUIREMENTS OF THE AMERICAN WELDING SOCIETY STRUCTURAL WELDING CODE, A.W.S. D1.1. GALVANIZE FABRICATED POSTS IN ACCORDANCE WITH AASHTO M 111 (ASTM A 123M).

NO PUNCHING, DRILLING, CUTTING OR WELDING IS PERMITTED AFTER GALVANIZING.

BENT PLATE LINE POST (STEEL)

P-46-76

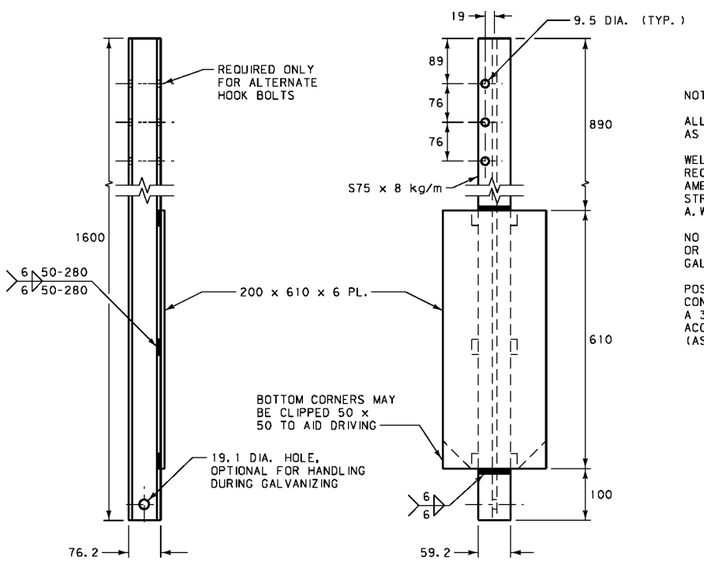

NOTES:

ALL HOLES ARE 9.5 mm EXCEPT AS NOTED.

WELDING IS TO CONFORM TO THE REQUIREMENTS OF THE CURRENT AMERICAN WELDING SOCIETY STRUCTURAL WELDING CODE, A.W.S. D1.1.

NO PUNCHING, DRILLING, CUTTING OR WELDING IS PERMITTED AFTER GALVANIZING.

POSTS AND POST PLATES ARE TO CONFORM TO AASHTO M 183M (ASTM A 36M) AND BE GALVANIZED IN ACCORDANCE WITH AASHTO M 111 (ASTM A 123M).

STRUCTURAL SHAPE LINE POST (STEEL)

P-1-76

ALL DIMENSIONS ARE MILLIMETERS (mm) UNLESS OTHERWISE NOTED.

DETAILED DRAWING	
REFERENCE STANDARD SPEC. SECTION 606	DWG. NO. 606-92
CABLE GUARDRAIL HARDWARE	
EFFECTIVE: AUGUST 1999	

MDT MONTANA DEPARTMENT OF TRANSPORTATION — MONTANA CADD

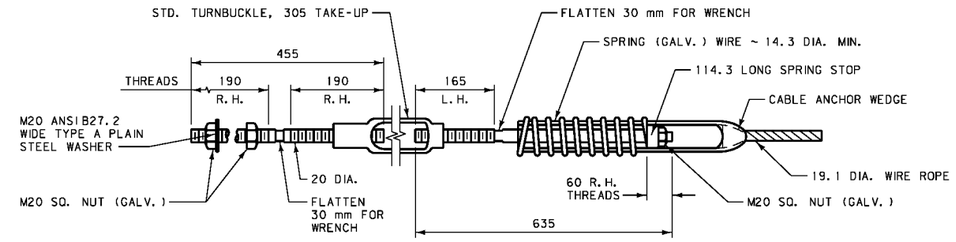

R.H. = RIGHT HAND
L.H. = LEFT HAND

COMPENSATING CABLE END ASSEMBLY

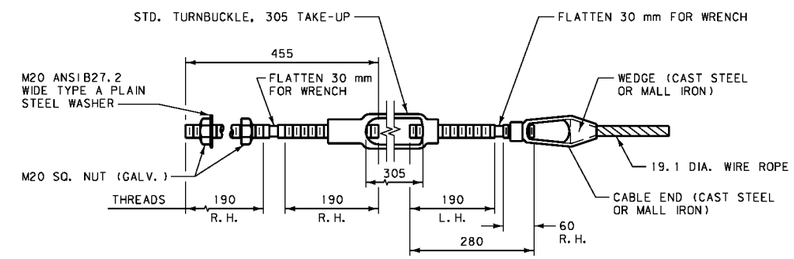

TURNBUCKLE CABLE END ASSEMBLY

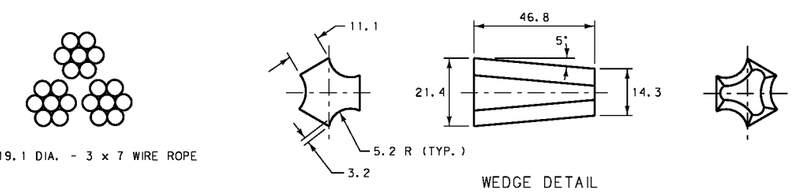

19.1 DIA. WIRE ROPE

RE-1-76

NOTES:

WIRE ROPE AND CONNECTING HARDWARE ARE TO CONFORM TO THE REQUIREMENTS OF AASHTO M 30 CLASS A, 19.1 mm ROPE. CONNECTING HARDWARE MUST DEVELOP THE FULL STRENGTH OF A SINGLE CABLE (111.2 kN). CAST STEEL COMPONENTS ARE TO CONFORM TO THE REQUIREMENTS OF AASHTO M 103M (ASTM A 27M). MALLEABLE IRON CASTINGS ARE TO CONFORM TO THE REQUIREMENTS OF ASTM A 47M.

AT ALL LOCATIONS WHERE THE CABLE IS CONNECTED TO A CABLE SOCKET WITH A WEDGE TYPE CONNECTION, CRIMP ONE WIRE OF THE WIRE ROPE OVER THE BASE OF THE WEDGE TO HOLD IT FIRMLY IN PLACE.

COMPENSATING DEVICES ARE TO HAVE SPRING CONSTANTS OF 78.8 N/mm, PLUS OR MINUS 8.8 N/mm, AND PERMIT A TRAVEL OF 150 mm PLUS OR MINUS 25 mm.

DESIGN SOCKET BASKETS FOR USE WITH THE WEDGE DETAILED IN THIS DRAWING.

ALTERNATE HARDWARE DESIGNS WILL BE CONSIDERED FOR APPROVAL PROVIDED THEIR CONNECTION DETAILS, FOR THE PURPOSE OF MAINTENANCE SUBSTITUTIONS, ARE COMPATIBLE WITH THE DETAILS OF THIS DRAWING AND THEIR OPERATING CHARACTERISTICS ARE SIMILAR TO THOSE OF THE HARDWARE IN THIS DRAWING.

THREADS OF EXTERNALLY THREADED PARTS ARE TO BE UNC, CLASS 2A TOLERANCE (ANSI B1.1). INTERNALLY THREADED PARTS ARE TO MEET THE DIMENSIONAL REQUIREMENTS OF ASTM A 563M.

ALL DIMENSIONS ARE MILLIMETERS (mm) UNLESS OTHERWISE NOTED.

DETAILED DRAWING	
REFERENCE STANDARD SPEC. SECTION 606	DWG. NO. 606-94
CABLE GUARDRAIL HARDWARE	
EFFECTIVE: AUGUST 1999	

MDT MONTANA DEPARTMENT OF TRANSPORTATION — MONTANA CADD