STATE	PROJECT NUMBER	SHEET NO.
MONTANA		

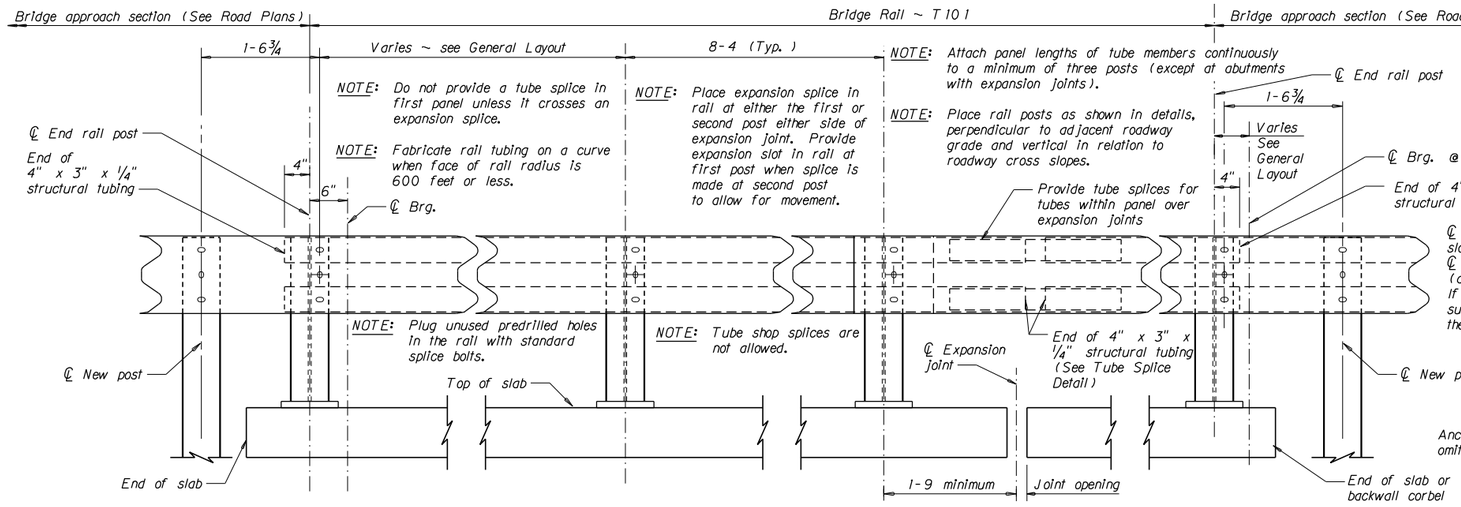

AT SQUARE BRIDGE END

INSIDE ELEVATION OF RAIL

AT SKEWED BRIDGE END

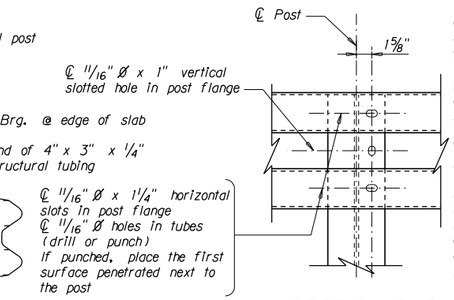

SECTION B-B

Scale: 1½" = 1'-0"

NOTES

GALVANIZING: Galvanize all bolts, nuts, washers and pipe sleeves in accordance with AASHTO M 232. Galvanize metal guardrail in accordance with ASTM Specification A 653 or AASHTO M 111.

REFLECTORS: Place a reflector on each end rail post and at approximately equal spacing (every third rail post but not to exceed 25 feet) between end rail posts. Mount reflectors with reflectorized face toward oncoming traffic. See Dtl. Dwg. No. 606-05 for reflector detail. Mount reflector to W-beam post web with an approved adhesive. Include the cost of the reflector in the unit price bid for Bridge Rail ~ T101.

PAYMENT: Bridge Rail ~ T101 is paid for by the linear foot which is full compensation for all resources necessary to complete the item. The number of linear feet of Bridge Rail ~ T101 for payment is shown on the General Layout. Use posts and plates conforming to AASHTO M 270 Grade 36T3. Use metal guardrail conforming to AASHTO M 180 and lap in direction of traffic.

ERECTION: Set the rail parallel to the roadway grade. Adjust rail to proper rail height using vertical slots in rail post or rail post shims.

PAINTING: Paint all posts, structural tubing and plates (except as noted) in accordance with the Standard Specifications. Galvanizing the posts, structural tubing and plates in accordance with AASHTO M 111 is allowed.

EXCEPTIONS: Use details shown on this drawing only as they apply to the project. Anchorage details may vary. Refer to other drawings for variations in these details.

FABRICATION: For the purposes of fabrication, this rail system is considered an ancillary item. The requirements of subsection 1.3.6 of AASHTO/AWS D1.5 apply.

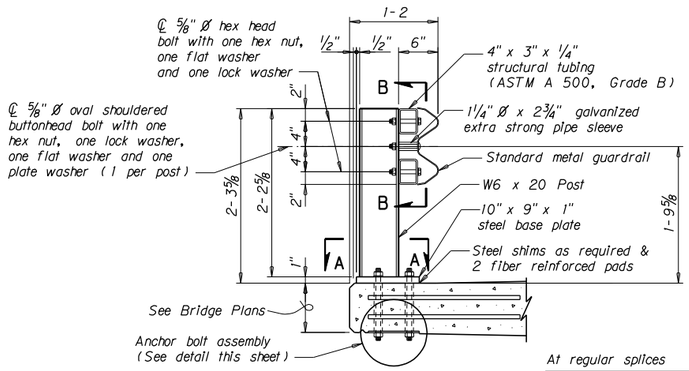

RAIL POST DETAIL

NOTE: See Dtl. Dwg. No. 606-84 for rectangular plate washer detail.

NOTE: Finish the top of slab under each rail post to a smooth and uniform surface to assure a proper alignment of the post and a tight fit between the fiber reinforced pad and concrete. Bush hammering is acceptable only to remove high spots.

NOTE: Use fiber reinforced pads meeting the requirements of subsection 711.16 of the Standard Specifications. Size and position the pads so that not less than ½" of the pad protrudes on all sides of the base plate. Punch slotted holes in pads to match base plate.

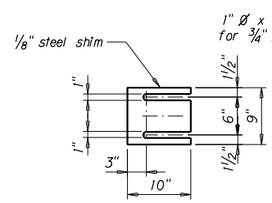

RAIL POST SHIM DETAIL

NOTE: Furnish shims as necessary to adjust rail to grade. Place shims between fiber reinforced pads. Place shims with slots toward roadway centerline.

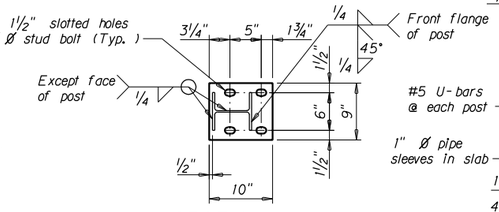

SECTION A-A

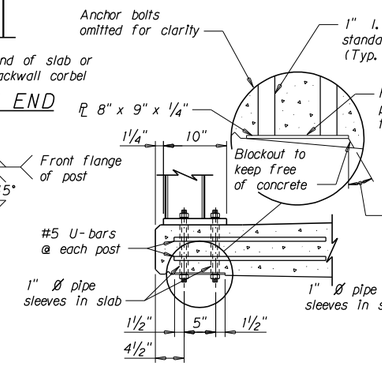

STANDARD SLAB

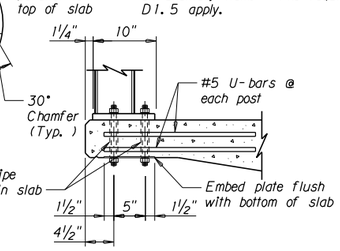

BULB T BEAM

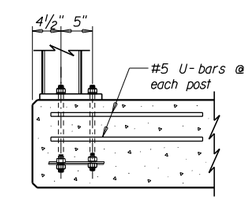

FLAT SLAB AND U-TYPE BENT

POST MOUNTING DETAILS

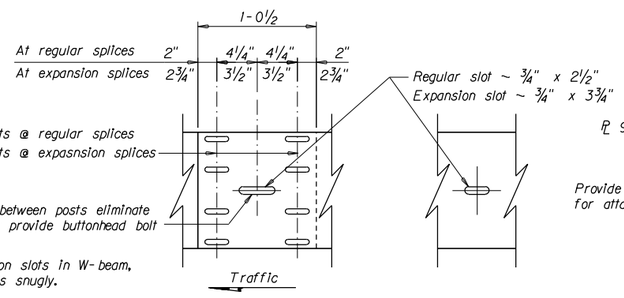

RAIL SPLICE

NOTE: At expansion slots in W-beam, tighten bolts snugly.

NOTE: Provide ⅝" Ø oval shouldered buttonhead bolts with hex nuts at all splice slots.

POST CONNECTION

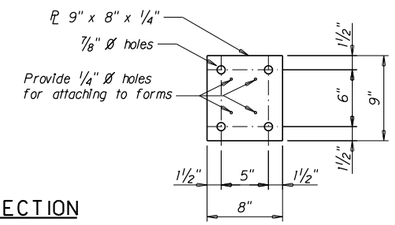

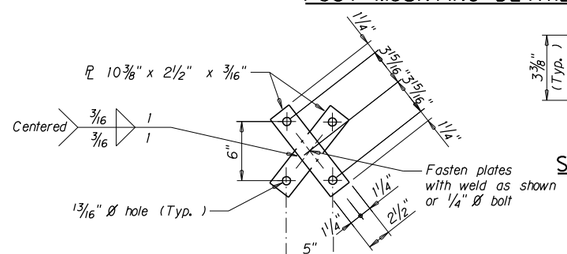

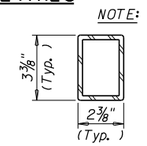

NOTE: Fabricate sleeves using channels, angles, plates, or bent plates meeting the dimensions shown. Weld and grind smooth as required. Fabricate sleeves using no more than four welds. Fabricate sleeves with a minimum wall thickness of ¼".

SLEEVE FABRICATION OPTIONS

No Scale

NOTE: See appropriate T beam or slab drawing for dimensions of #4 U-bar at each post.

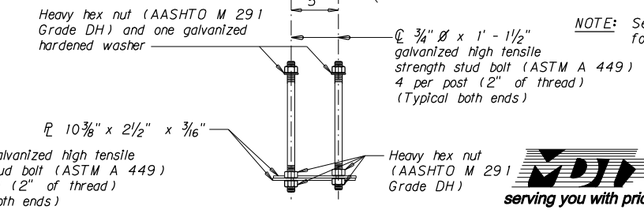

ANCHOR BOLT ASSEMBLY DETAIL

(Typical for flat slab and U-type bent)

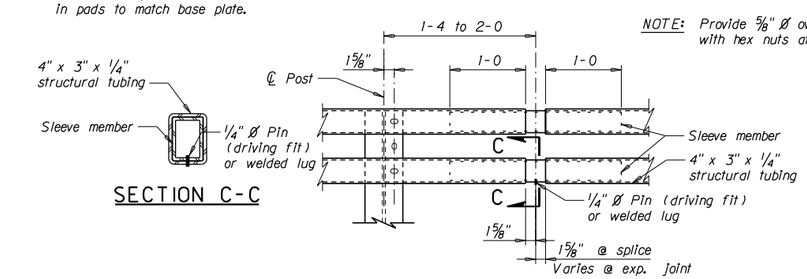

SECTION C-C

TUBE SPLICE DETAIL

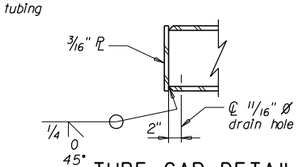

TUBE CAP DETAIL

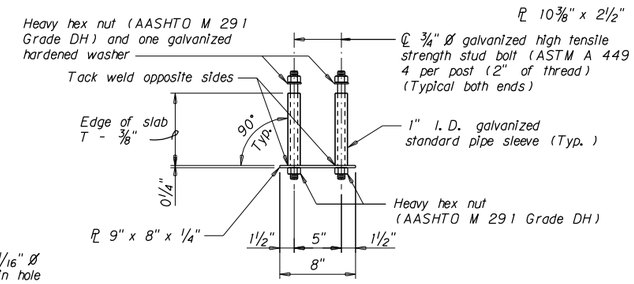

ANCHOR BOLT ASSEMBLY DETAIL

(For typical slab)

Montana Department of Transportation

serving you with pride

STANDARD BRIDGE RAIL

TYPE T101

DRAWN	6-21-06	L.M.S.
CHECKED	11-29-06	M.L.R.
APPROVED	12-18-07	D.F.J.
REVISED	4-1-08	T.J.B.
REVISED		
REVISED		

No Scale

DRAWING NO. SBR-T101

MONTANA DEPARTMENT OF TRANSPORTATION

serving you with pride

C:\dgn\EXXXBRSTD101.DGN
7/28/2008
1:59:34 PM u1426